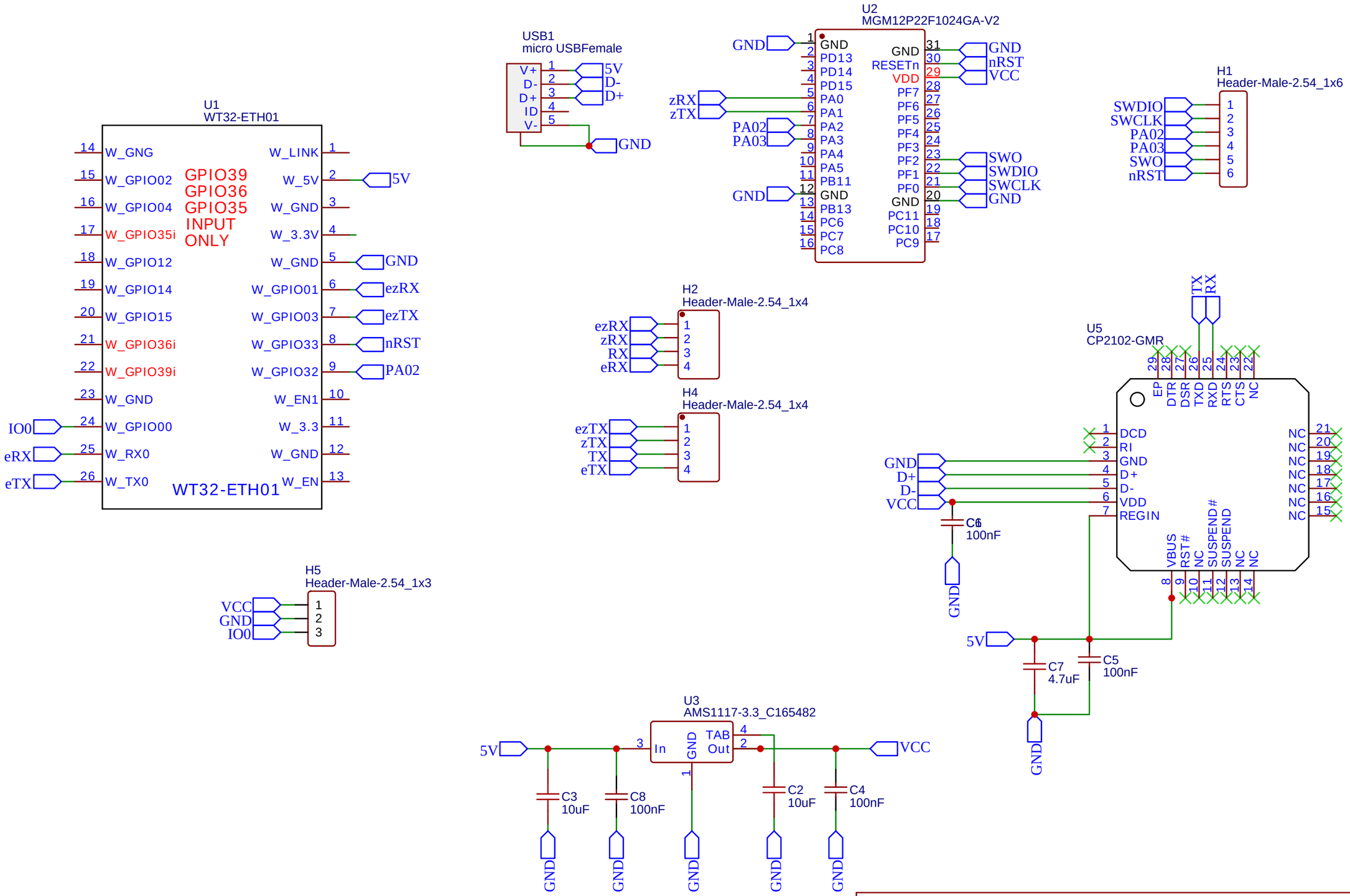

TITLE: tube_efr32_pro_coord	REV: 1.0
Company: Tube ZB	Sheet: 1/1
Date: 2021-01-31 Drawn By: Byron Poland	