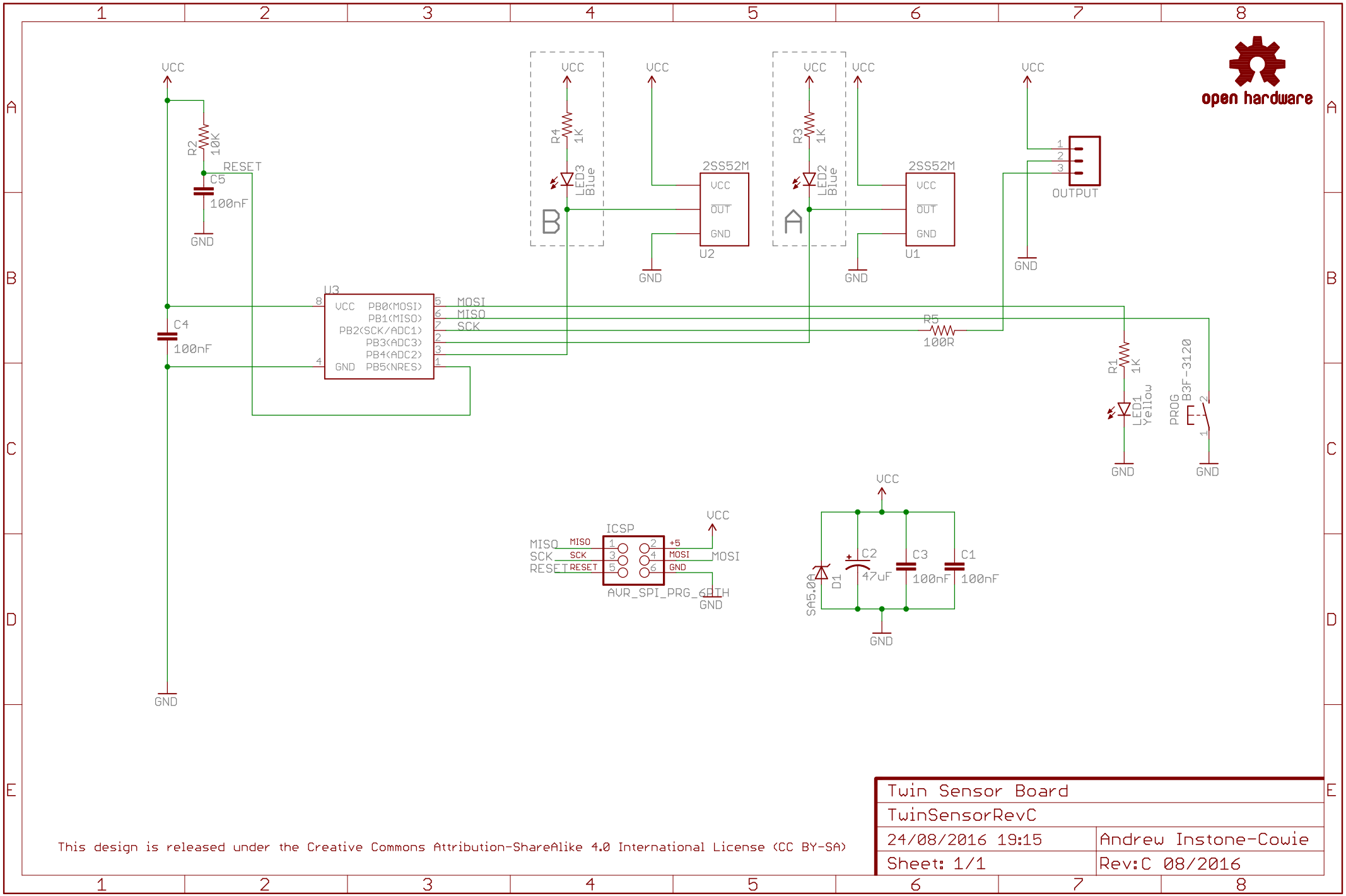

Twin Sensor Board	
TwinSensorRevC	
24/08/2016 19:15	Andrew Instone-Cowie
Sheet: 1/1	Rev:C 08/2016

This design is released under the Creative Commons Attribution-ShareAlike 4.0 International License (CC BY-SA)