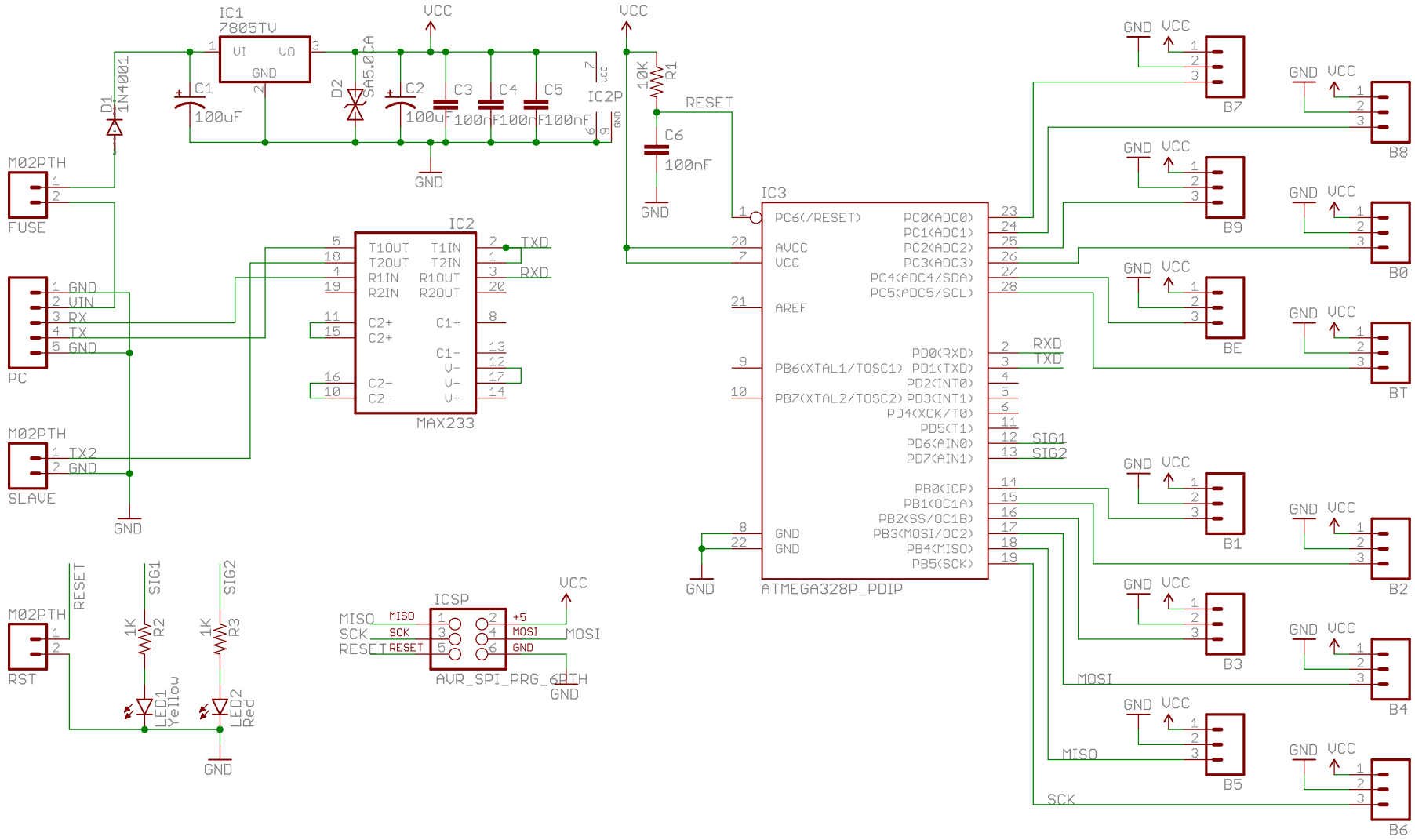

This design is released under the Creative Commons Attribution-ShareAlike 4.0 International License (CC BY-SA)

Simulator Interface Board	
InterfaceBoardRevB	
25/05/2015 12:07:20	A J Instone-Cowie
Sheet: 1/1	Rev:B 02/2015