Basic concepts 001

Problem has been graded.

The curve shows the current flowing through a circuit element. Find the net charge q that has entered the element from t = 0 s to t = 4 s.

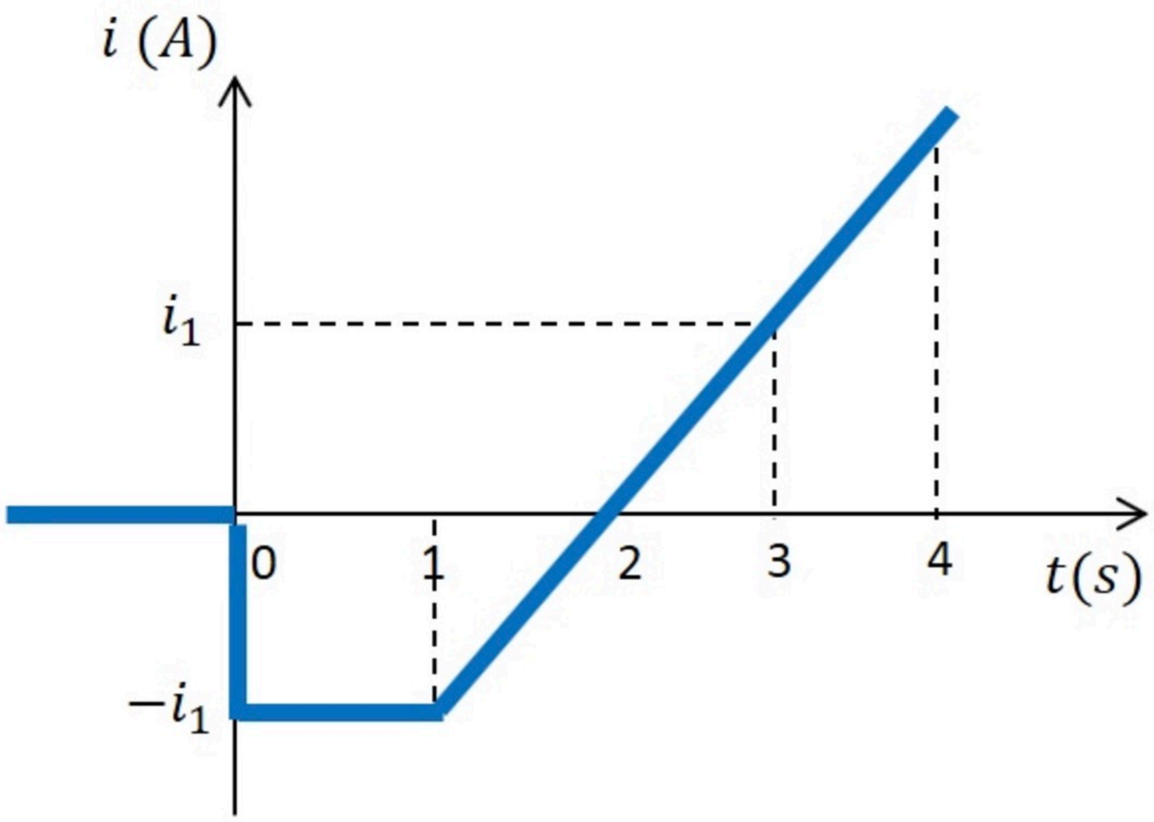

Given Variables:

i_1 : 8 mA

Calculate the following:

q (C) :

Hint: Check the units.

The curve shows the current flowing through a circuit element. Find the net charge q that has entered the element from t = 0 s to t = 4 s.

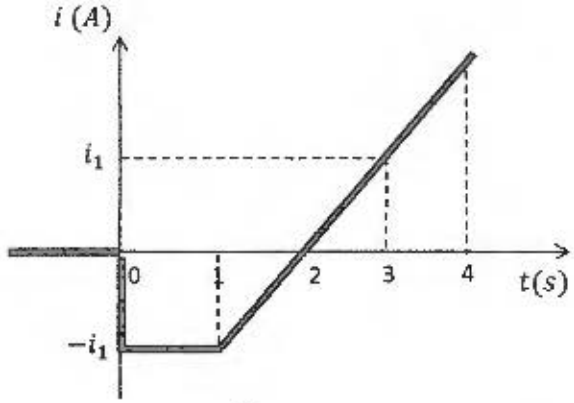

i1 = 4 mA

$$q = \int_0^4 i(t)\,dt = \left(-i_1 \cdot \cancel{1}\right) + \left(\frac{-i_1 \cdot \cancel{1}}{2}\right) + \left(\frac{i_1 \cdot \cancel{1}}{2}\right) + \left(i_1 \cdot \cancel{1} + \frac{i_1 \cdot 1}{2}\right)$$

$$= \frac{i_1}{2}$$

$$= \frac{4 \cdot 10^{-3}}{2}$$

$$\boxed{q = 0.002\ C}$$

Basic concepts 002

Problem has been graded.

Determine the values of B1, B2 and B3.

The current through a circuit element is

$$i(t) = A1 \cdot e^{\frac{t}{A2}} \qquad \text{for } t \geq 0$$
$$= 0 \qquad \text{for } t < 0$$

The total charge that has entered the circuit element can be represented as

$$q(t) = B1 + B2 \cdot e^{\frac{t}{B3}} \qquad \text{for } t \geq 0$$
$$= 0 \qquad \text{for } t < 0$$

Given Variables:

A1 : 4 A

A2 : -3 s

Calculate the following:

B1 (C) :

B2 (C) :

B3 (s) :

The current through a circuit element is

$$i(t) = A1 \cdot e^{\frac{t}{A2}} \qquad \text{for } t \geq 0$$
$$= 0 \qquad \text{for } t < 0$$

A1 = 3 A

A2 = -2 s

The total charge that has entered the circuit element can be represented as

$$q(t) = B1 + B2 \cdot e^{\frac{t}{B3}} \qquad \text{for } t \geq 0$$
$$= 0 \qquad \text{for } t < 0$$

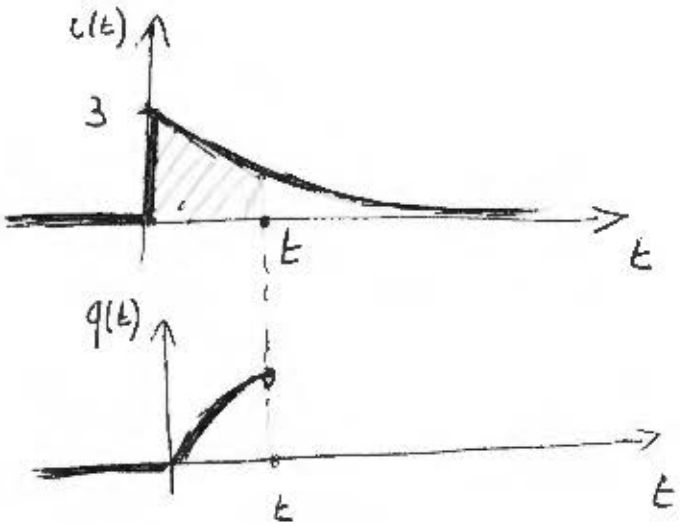

at any time t : q(t) is the integral of i(t) up until time t

$$q(t) = \int_{-\infty}^{t} i(u)\,du = \int_{0}^{t} 3e^{-\frac{u}{2}}\,du$$

$$= 3(-2)\int_{0}^{t} e^{-\frac{u}{2}}\,d\left(-\frac{u}{2}\right) = -6\, e^{-\frac{u}{2}}\Big|_{0}^{t} = -6\left(e^{-\frac{t}{2}} - 1\right)$$

$$\boxed{q(t) = 6 - 6e^{-\frac{t}{2}}}$$

$$\boxed{\begin{aligned} B_1 &= 6\ C \\ B_2 &= -6\ C \\ B_3 &= -2\ s \end{aligned}}$$

Basic concepts 003

Problem has been graded.

Find the energy received by this element between time t = 0 and t = T1.

For this element

$$v(t) = 2\pi \cdot \cos(A1 \cdot \pi \cdot t) \qquad \text{V}$$

$$i(t) = A2 \cdot \sin(A1 \cdot \pi \cdot t)$$

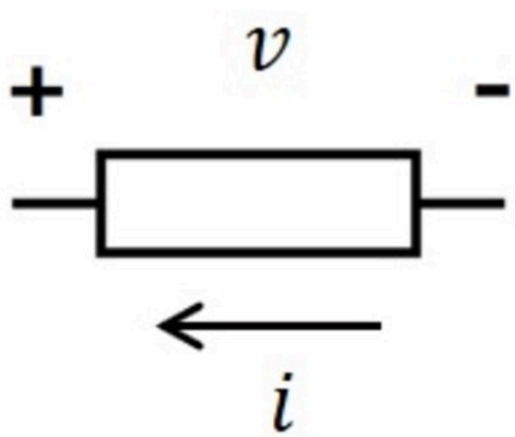

(Note: *Hz* is the unit used for frequency. It is equal to s^{-1})

Given Variables:

A1 : 5 Hz

A2 : 3 A

T1 : 2.5 s

Calculate the following:

E (J) :

Hint: Are we using passive sign convention?

Find the energy received by this element between time t = 0 and t = T1.

For this element

$$v(t) = 2\pi \cdot \cos(A1 \cdot \pi \cdot t) \qquad \text{V}$$

$$i(t) = A2 \cdot \sin(A1 \cdot \pi \cdot t)$$

A1 = 1 Hz

A2 = 5 A

T1 = 1.5 s

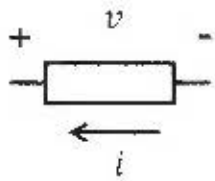

(Note: *Hz* is the unit used for frequency. It is equal to s^{-1})

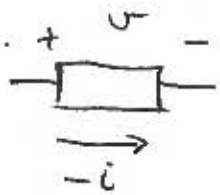

for passive sign convention ⇝ gives power received

$$p(t) = v(t) \cdot (-i(t)) = -2\pi \cos(\pi t) \cdot 5 \sin(\pi t)$$

$$= -10\pi \sin(\pi t) \cos(\pi t) = -5\pi \sin(2\pi t)$$

$$E = \int_0^{1.5} p(t)\,dt = -5\pi \int_0^{1.5} \sin(2\pi t)\,dt = \frac{-5\pi}{2\pi} \int_0^{1.5} \sin(2\pi t)\,d(2\pi t)$$

$$= -\frac{5}{2}\left(-\cos(2\pi t)\right)\Big|_0^{1.5}$$

$$= -2.5\left(-\cos(3\pi t) + 1\right)$$

$$= -2.5\left(-(-1) + 1\right)$$

$$= -5$$

$$\boxed{E = -5\ \text{J}}$$ received

Basic concepts 004

Problem has been graded.

We are given the power received P1, P2, P3 and the voltage v1. Find the power received P4.

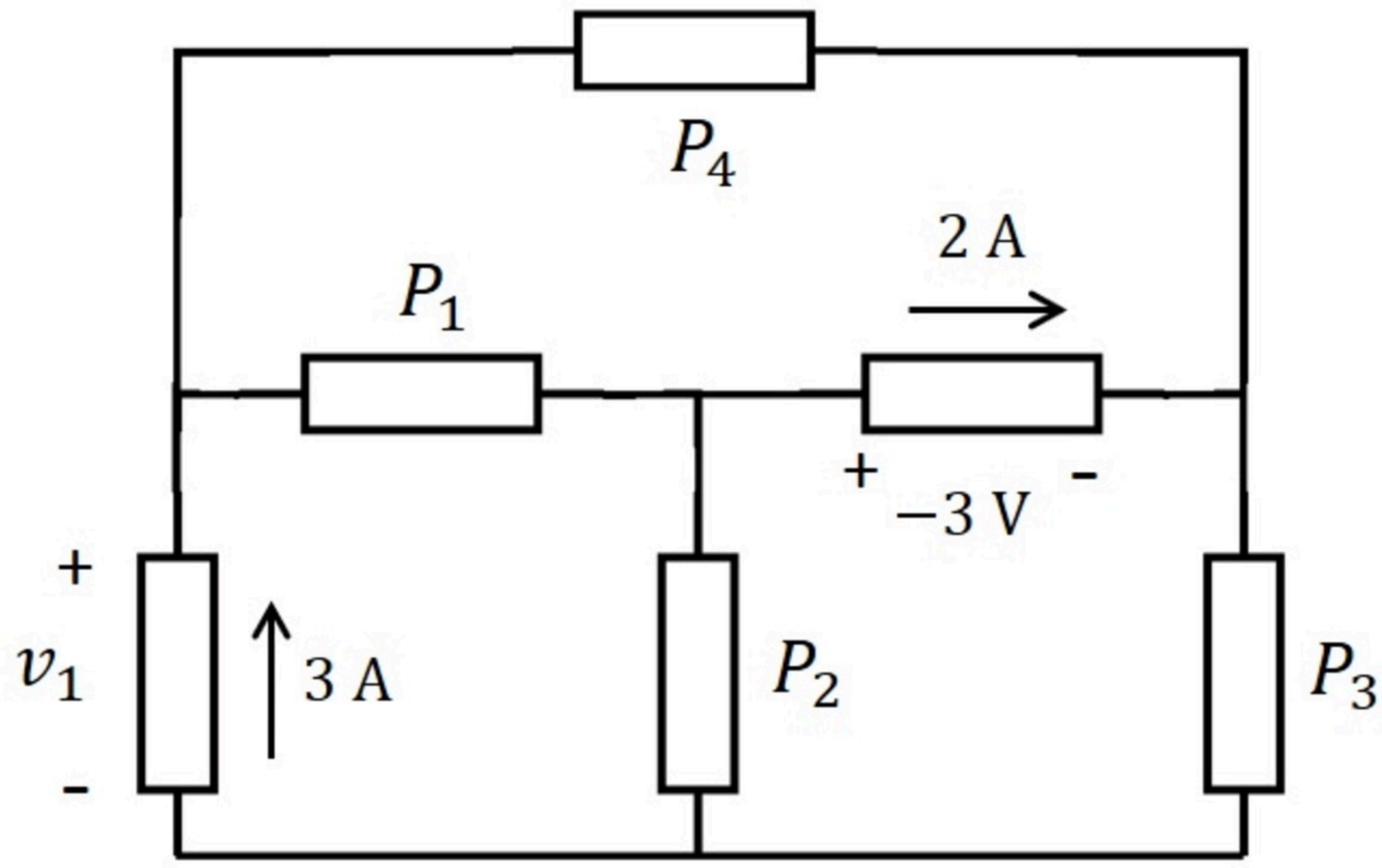

Given Variables:

v1 : 2 V

P1 : 16 W

P2 : -4 W

P3 : 1 W

Calculate the following:

P4 (W) :

Hint: Sum of power received is equal to sum of power supplied.

We are given the power received P1, P2, P3 and the voltage v1. Find the power received P4.

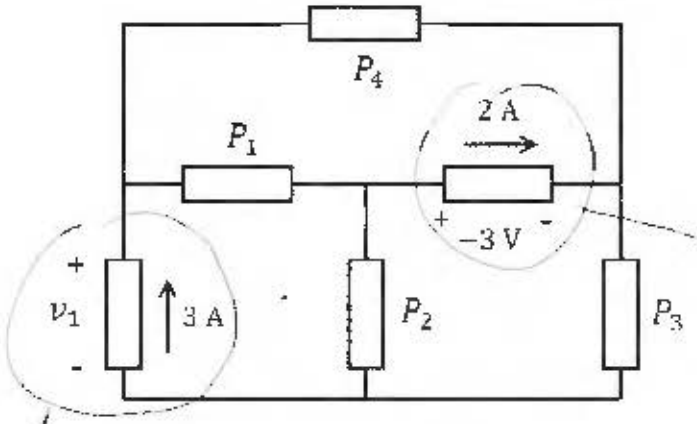

v1 = 1 V

P1 = 14 W

P2 = -5 W

P3 = -4 W

→ passive sign convention

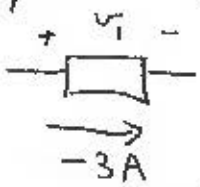

$P = 1 \cdot (-3) = -3\,W$ received

→ $P = (-3) \cdot 2 = -6\,W$ received

$$\sum_{\text{received}} P = \sum_{\text{supplied}} P \Rightarrow -3 - 6 + P_1 + P_2 + P_3 + P_4 = 0$$

$$-3 - 6 + 14 - 5 - 4 + P_4 = 0$$

$$\boxed{P_4 = 4W}$$ received

Basic concepts 005

Problem has been graded.

For each of the resistors, calculate the current through them and power received by them.

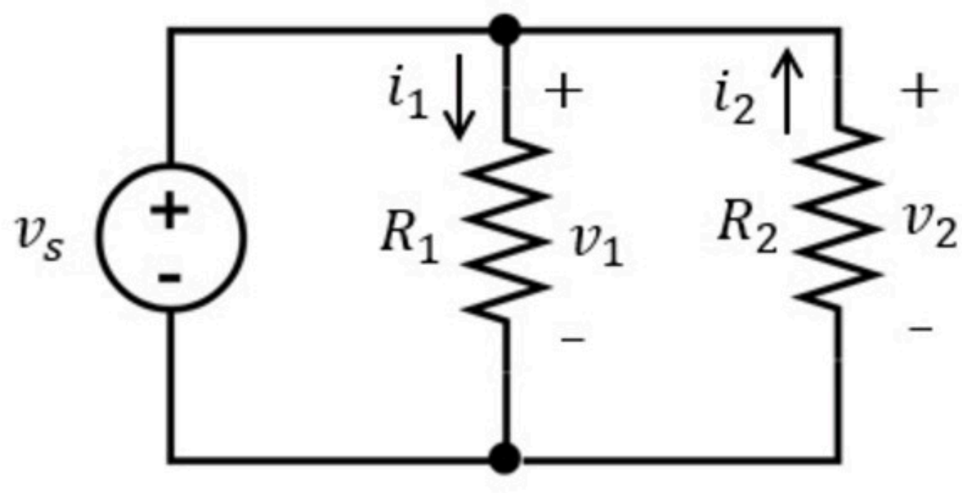

Given Variables:

v_s : 10 V

R_1 : 10 ohm

R_2 : 4 ohm

Calculate the following:

i_1 (A) :

i_2 (A) :

P_1 (W) :

P_2 (W) :

Hint: Find the voltage across the resistors first

For each of the resistors, calculate the current through them and power received by them.

vs = 20 V

R1 = 20 Ω

R2 = 10 Ω

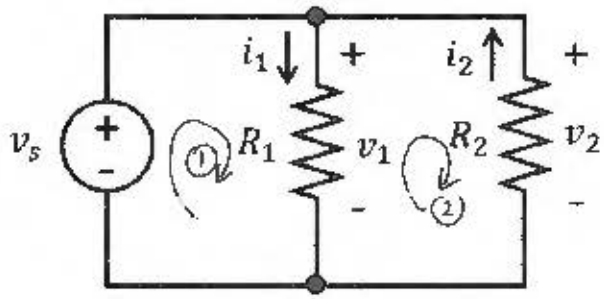

KVL ① : $v_s = v_1 \Rightarrow v_1 = 20V$

KVL ② : $v_1 = v_2 \Rightarrow v_2 = 20V$

$$i_1 = \frac{v_1}{R_1} = \frac{20}{20} \Rightarrow \boxed{i_1 = 1A}$$

$$i_2 = \frac{-v_2}{R_2} = \frac{-20}{10} \Rightarrow \boxed{i_2 = -2A}$$

$$P_1 = \frac{v_1^2}{R_1} = \frac{400}{20} \Rightarrow \boxed{P_1 = 20W}$$

received

or could have used $P = R \cdot i^2$ or $P = i \cdot v$

$$P_2 = \frac{v_2^2}{R_2} = \frac{400}{10} \Rightarrow \boxed{P_2 = 40W}$$

received

Basic Concepts 011

Problem has been graded.

Find the power P_1 supplied by this element:

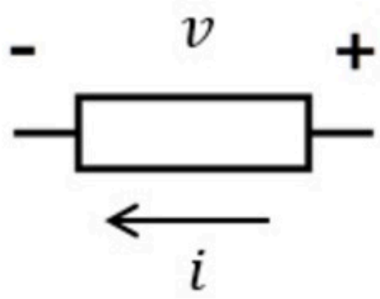

Find the power P_2 supplied by this element:

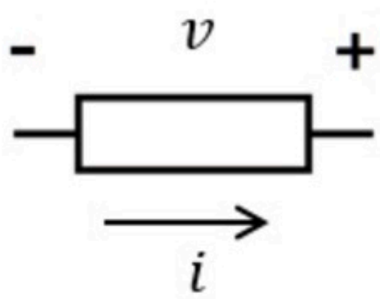

Find the power P_3 received by this element:

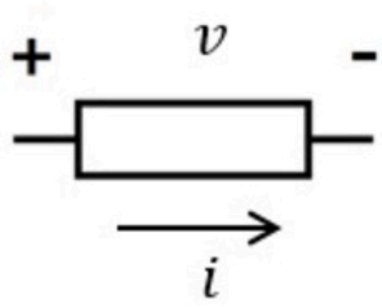

Given Variables:

v : -5 V

i : 4 A

Calculate the following:

P1 (W) :

P2 (W) :

P3 (W) :

Hint: Convert first to passive sign convention

(a) Find the power P_1 supplied by this element:

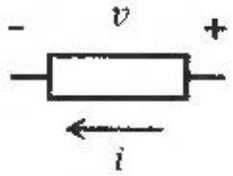

v = -2 V

i = 3 A

(b) Find the power P_2 supplied by this element:

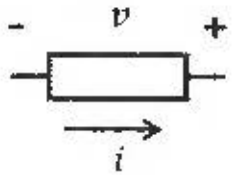

(c) Find the power P_3 received by this element:

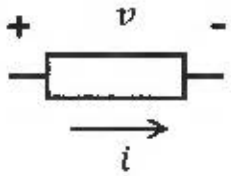

(a)

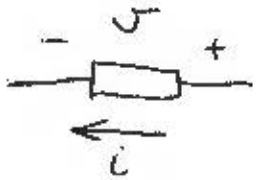

PASSIVE SIGN CONVENTION

$P = v \cdot i = -6$ ⇝ RECEIVED

$\boxed{P_1 = 6W \text{ SUPPLIED}}$

(b)

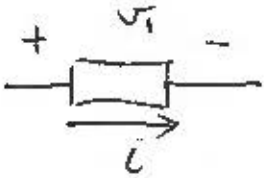

SWITCH TO PASSIVE SIGN CONVENTION

$v_1 = -v = 2V$

$P = v_1 \, i = 6$ ⇝ RECEIVED

$\boxed{P_2 = -6W \text{ SUPPLIED}}$

(c)

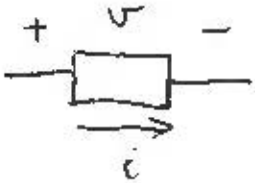

PASSIVE SIGN CONVENTION

$P = v \cdot i = -6$ ⇝ RECEIVED

$\boxed{P_3 = -6W \text{ RECEIVED}}$

PP - Basic concepts 001

Problem has been graded.

What is the current i flowing through the element at time $t = 0.25$ seconds, when the charge flow is $q(t)$?

$$q(t) = \frac{6}{\pi} \cdot cos(10\pi t) \quad \mu C$$

Given Variables:

. : . .

Calculate the following:

i (mA) :

-0.06 ✓

Hint: Pay attention to the units

PP - Basic concepts 002

Problem has been graded.

A current of 5 mA is flowing through a conductor. What is the amount of charge q that has passed through any cross-section of this conductor in 10 seconds?

Given Variables:

. : . .

Calculate the following:

q (C) :

0.05 ✓

Hint: Pay attention to the units

PP - Basic concepts 003

Problem has been graded.

What is the current i flowing through the element at time $t = 7$ seconds, when the charge flow is as shown in the figure?

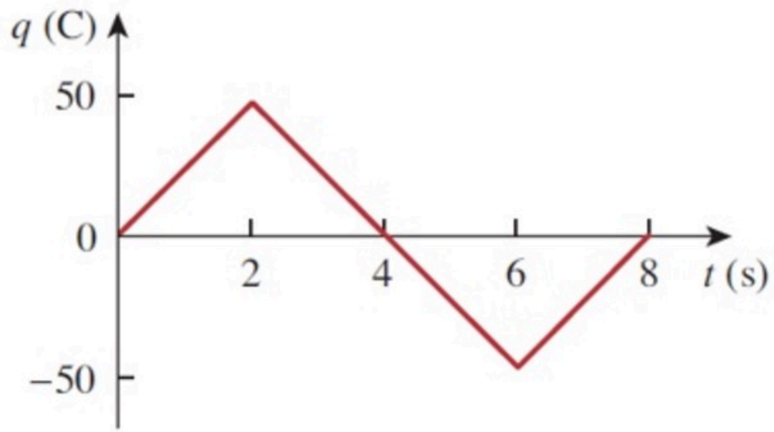

Given Variables:

. : . .

Calculate the following:

i (A) :

25

Hint: Current is the derivative of charge at a certain time

PP - Basic concepts 004

Problem has been graded.

The current flowing through an element is shown in the figure. At time $t = 0$, the charge that has passed through the element already is 2 C.

What is the total amount of charge q_1 that has passed through the element at time $t_1 = 3$ seconds?
What is the total amount of charge q_2 that has passed through the element at time $t_2 = 5$ seconds?

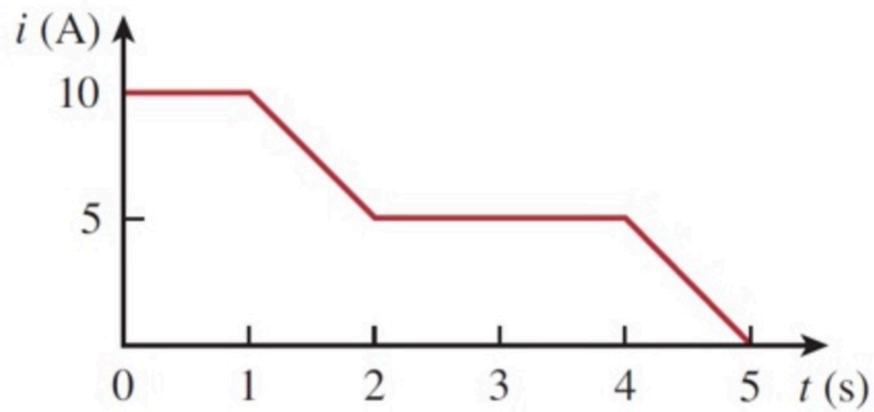

Given Variables:

. : . .

Calculate the following:

q1 (C) :

24.5 ✓

q2 (C) :

32 ✓

Hint: Don't forget the initial charge

PP - Basic concepts 005

Problem has been graded.

Find the power P_1 received by this element:

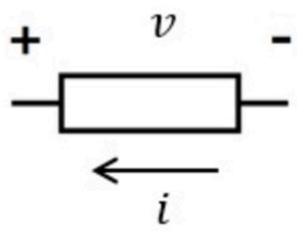

Find the power P_2 received by this element:

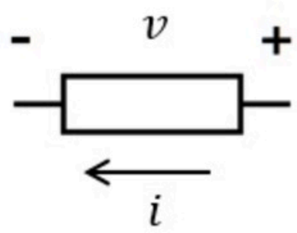

Find the power P_3 supplied by this element:

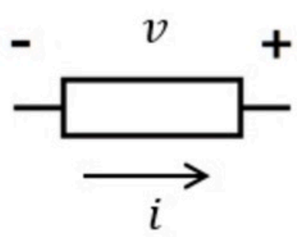

Given Variables:

v : 2 V

i : -3 A

Calculate the following:

P1 (W) :

6 ✓

P2 (W) :

-6 ✓

P3 (W) :

-6 ✓

Hint: Convert first to passive sign convention

PP - Basic concepts 007

Problem has been graded.

The current flowing through an element and the voltage across this element are shown in the figures.

Find the total energy E received by the element for the period time $0 < t < 3$ s.

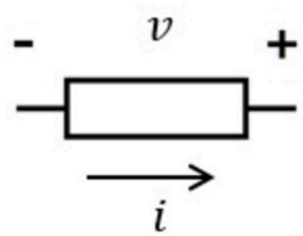

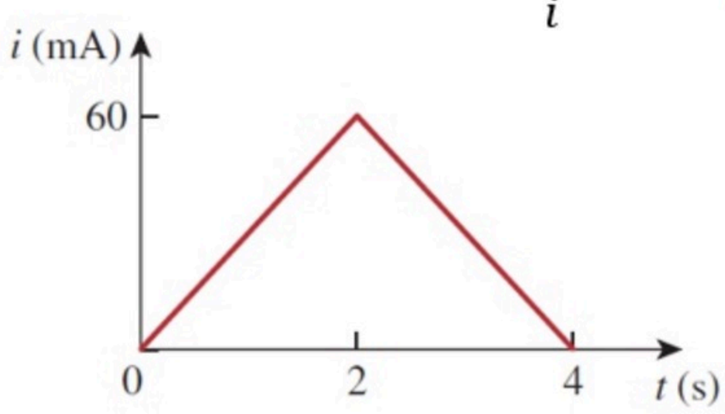

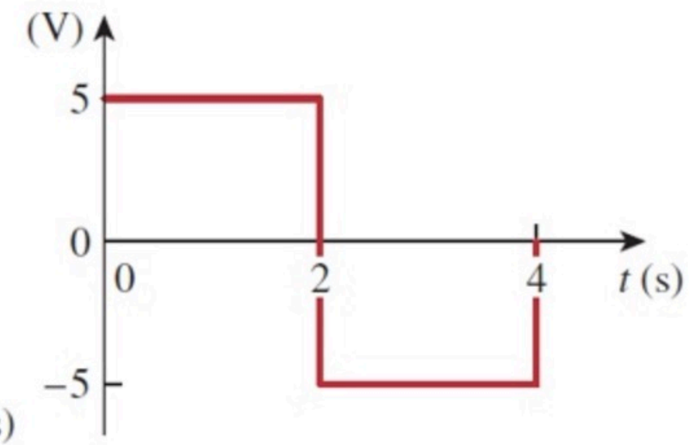

Given Variables:

. : . .

Calculate the following:

E (J) :

-0.075 ✓

Hint: Convert first to passive sign convention and check units

PP - Basic concepts 008

Problem has been graded.

The figure shows a circuit with 5 circuit elements.

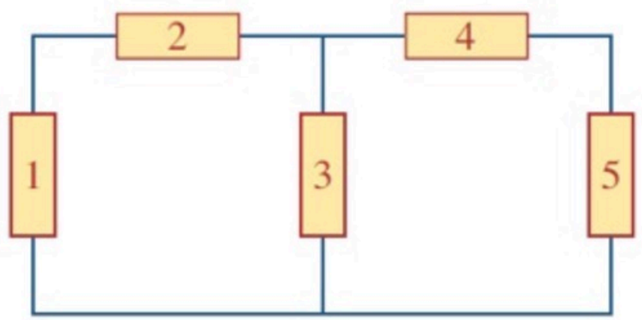

Element 1 supplies 3 W
Element 2 supplies -5 W
Element 3 receives 8 W
Element 4 receives -1 W

How much power P does element 5 supply?

Given Variables:

. : . .

Calculate the following:

P (W) :

9

Hint: Use conservation of energy

Basic concepts 006

Problem has been graded.

Find the current i_1 and the power P_1 received by the resistor.

Then change the current source to 5A. Recalculate the current i_1 (renaming it to i_2) and the power P_2 received by the resistor.

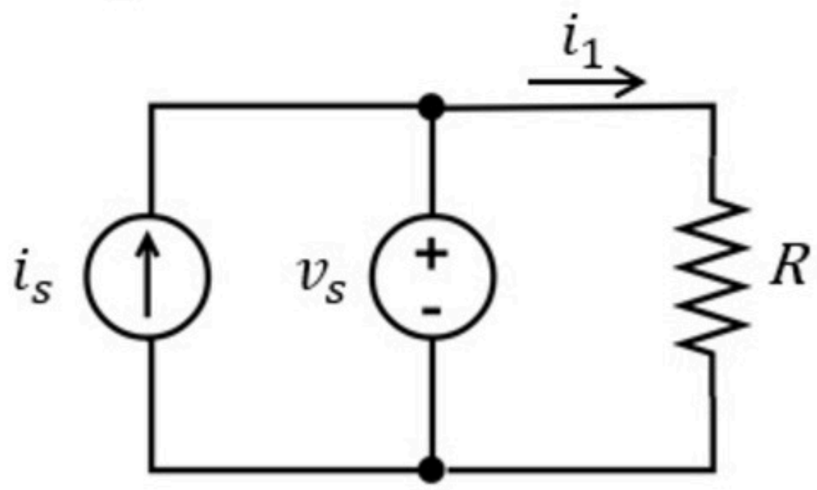

Given Variables:

v_s : 16 V

i_s : 4 A

R : 8 ohm

Calculate the following:

i_1 (A) :

P_1 (W) :

i_2 (A) :

P_2 (W) :

Hint: The voltage across a current source can be non-zero

Find the current i_1 and the power P_1 received by the resistor.

Then change the current source to 5A. Recalculate the current i_1 (renaming it to i_2) and the power P_2 received by the resistor.

Vs = 16 V

Is = 4 A

R = 16 Ω

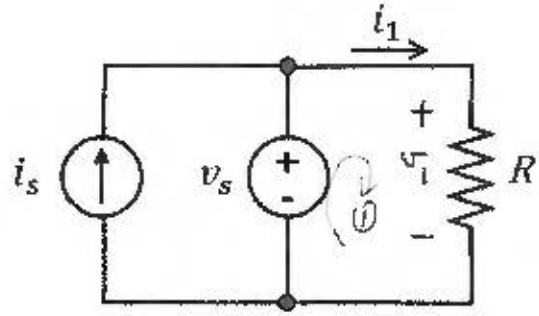

KVL①. $v_s = v_1 \Rightarrow v_1 = 16\,V$

$$i_1 = \frac{v_1}{R} = \frac{16}{16} \Rightarrow \boxed{i_1 = 1A}$$

$$P_1 = i_1^2 \cdot R = 1^2 \cdot 16 \Rightarrow \boxed{P_1 = 16\,W}$$

received

When $i_s = 5A$

v_1 still the same. $v_1 = 16V \Rightarrow i_2 = \frac{v_1}{R}$

$$\boxed{i_2 = 1A}$$

$$P_2 = i_2^2 R \qquad \boxed{P_2 = 16\,W}$$

received

Basic analysis 002

Problem has been graded.

Determine the power P_1 supplied by voltage source v_1 and the power P_2 supplied by voltage source v_2.

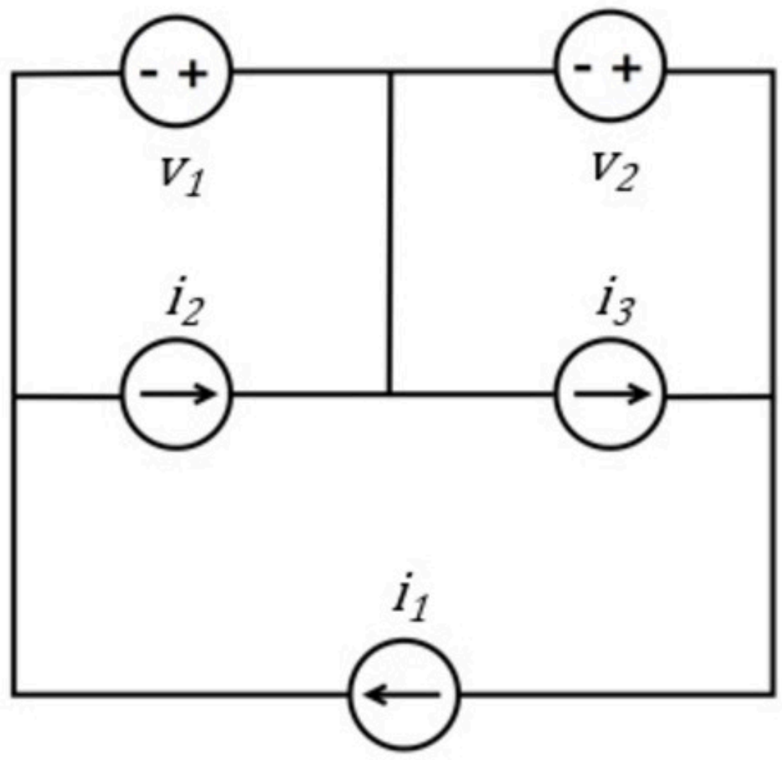

Given Variables:

i1 : 4 A

i2 : 2 A

i3 : 3 A

v1 : 3 V

v2 : 4 V

Calculate the following:

P1 (W) :

P2 (W) :

Determine the power P_1 supplied by voltage source v_1 and the power P_2 supplied by voltage source v_2.

i1 = 4 A

i2 = 2 A

i3 = 3 A

v1 = 3 V

v2 = 4 V

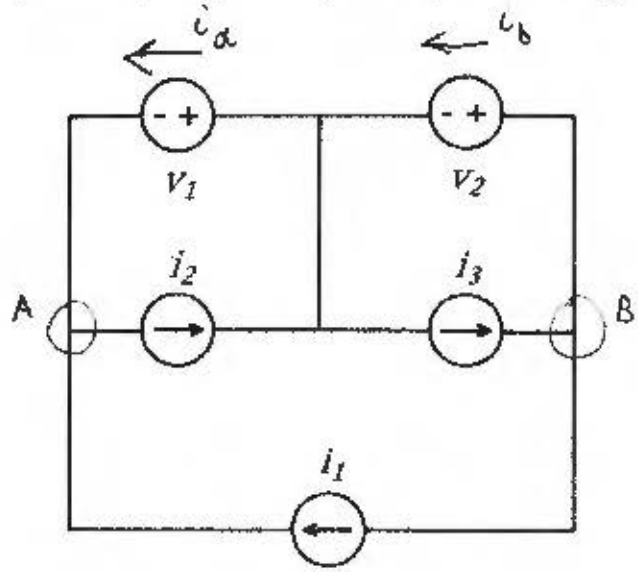

KCL @ A : $i_1 + i_a = i_2 \Rightarrow i_a = 2 - 4 = -2\,A$

$P_1 = v_1 \cdot i_a = -6\,W$ RECEIVED (PASSIVE SIGN CONVENTION)

$\boxed{P_1 = 6\,W}$ SUPPLIED

KCL @ B : $i_3 = i_b + i_1 \Rightarrow i_b = 3 - 4 = -1\,A$

$P_2 = v_2 \cdot i_b = -4\,W$ RECEIVED

$\boxed{P_2 = 4\,W}$ SUPPLIED

Basic analysis 003

Problem has been graded.

Determine the power received by each of the three resistors.

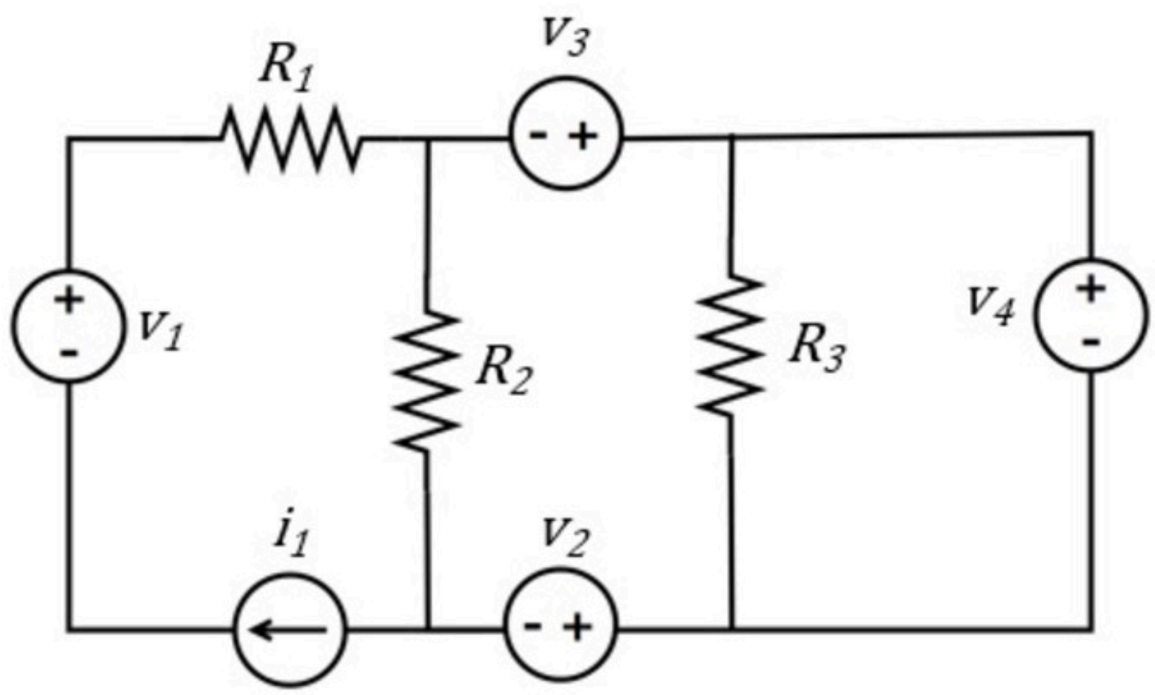

Given Variables:

v1 : 3 V

v2 : 5 V

v3 : 1 V

v4 : 2 V

i1 : 1 A

R1 : 2 ohm

R2 : 3 ohm

R3 : 4 ohm

Calculate the following:

P1 (W) :

P2 (W) :

P3 (W) :

Hint: Find currents using KCL and KVL

Determine the power received by each of the three resistors.

v1 = 2 V

v2 = 3 V

v3 = 4 V

v4 = 2 V

i1 = 4 A

R1 = 2 Ω

R2 = 1 Ω

R3 = 4 Ω

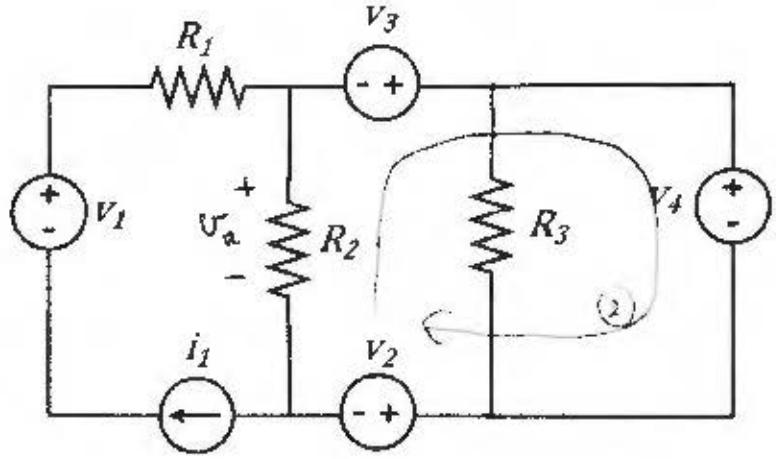

(a) R_1 : $P = R_1 \cdot i_1^2 = 2 \cdot 4^2$ $\boxed{P_{R_1} = 32\,W}$

(b) R_3 : $P = \dfrac{v_4^2}{R_3} = \dfrac{4}{4}$ $\boxed{P_{R_3} = 1\,W}$

(c) KVL in (2) : $v_a + v_3 - v_4 - v_2 = 0$

$v_a = -4 + 2 + 3 = 1\,V$

$P = \dfrac{v_a^2}{R_2} = \dfrac{1}{1}$ $\boxed{P_{R_2} = 1\,W}$

Basic analysis 011

Problem has been graded.

This circuit contains a capacitor (which we will cover in detail later in this course) with a voltage v_C across it. Voltage v_2 and current i_1 will satisfy the equations shown below (as we will also see later).
Find the coefficients *A*, *D* and *E*.

$v_C = 10 - 10 \cdot e^{-20t}$ V

$v_2 = A + B \cdot e^{-20t}$ V $\qquad i_1 = D + E \cdot e^{-20t}$ A

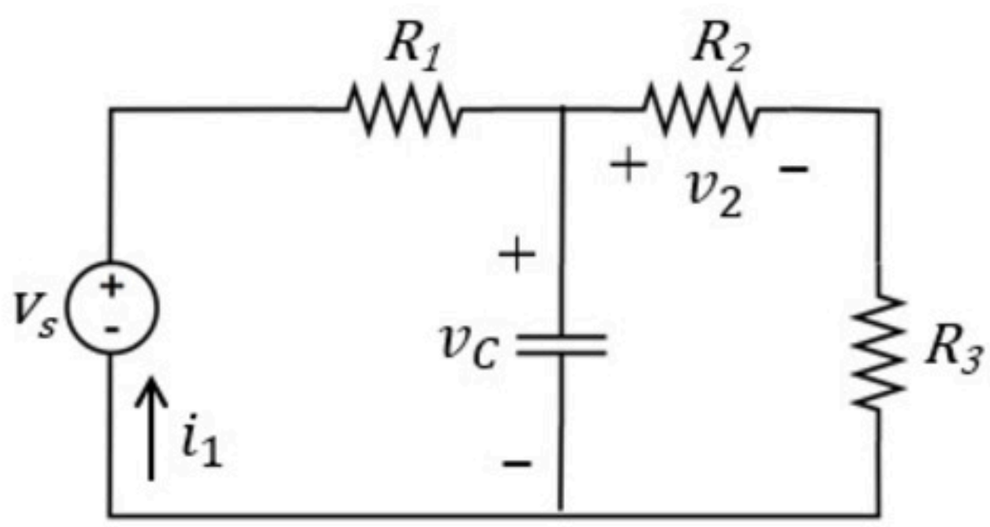

Given Variables:

vs : 20 V

R1 : 20 ohm

R2 : 7 ohm

R3 : 13 ohm

Calculate the following:

A (.) :

B (.) :

D (.) :

E (.) :

This circuit contains a capacitor (which we will cover in detail later in this course) with a voltage v_C across it. Voltage v_2 and current i_1 will satisfy the equations shown below (as we will also see later).
Find the coefficients *A*, *D* and *E*.

Vs = 15 V

R1 = 10 Ω

R2 = 15 Ω

R3 = 5 Ω

$$v_C = 10 - 10 \cdot e^{-20t} \text{ V}$$

$$v_2 = A + B \cdot e^{-20t} \text{ V} \qquad i_1 = D + E \cdot e^{-20t} \text{ A}$$

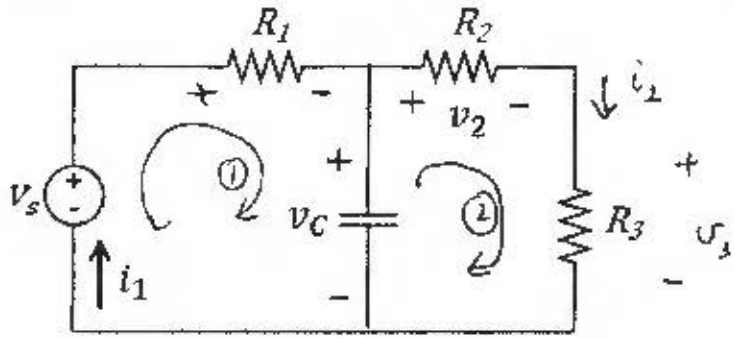

KVL IN ① : $v_S - v_{R_1} - v_C = 0 \qquad v_{R_1} = i_1 \cdot R_1$

$$\Rightarrow \quad i_1 = \frac{1}{R_1} \cdot (v_S - v_C) = \frac{1}{10}\left(15 - 10 + 10\, e^{-20t}\right)$$

$$= \frac{1}{10}\left(5 + 10\, e^{-20t}\right)$$

$\boxed{D = 0.5}$ $\boxed{E = 1}$

KVL in ② : $v_C - v_2 - v_3 = 0 \qquad v_2 = i_2 \cdot R_2$

$v_3 = i_2 \cdot R_3$

$$\Rightarrow \quad v_C = v_2 + v_3 = i_2 (R_2 + R_3)$$

$$\Rightarrow \quad v_2 = R_2 \cdot i_2 = v_C \cdot \frac{R_2}{R_2 + R_3}$$

$$= v_C \cdot \frac{15}{20}$$

⇝ THIS COULD ALSO BE FOUND DIRECTLY WITH VOLTAGE DIVIDER

$$\Rightarrow \quad v_2 = 7.5 - 7.5\, e^{-20t}$$

$\boxed{A = 7.5}$ $\boxed{B = -7.5}$

Basic analysis 013

No more attempts left.

Find v_a.

What is the power *P* received by the dependent source?

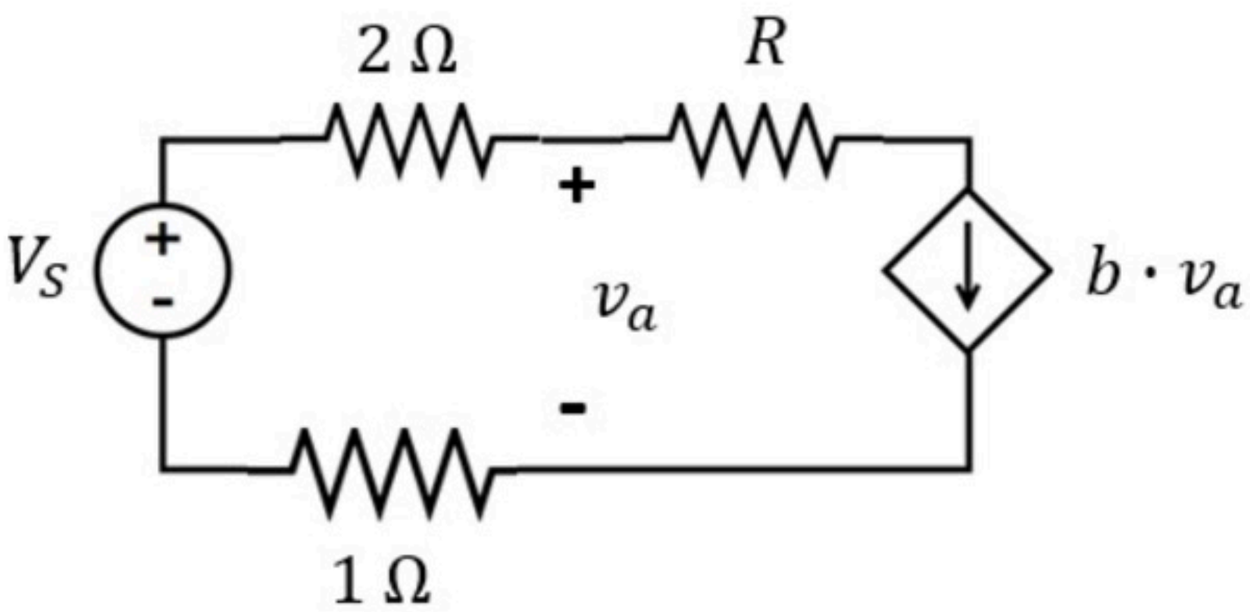

Given Variables:

Vs : 7 V

R : 2 ohm

b : 2 A/V

Calculate the following:

va (V) :

P (W) :

Hint: KVL also works when the voltage drop is not across an element.

Find v_a.

What is the power P received by the dependent source?

Vs = 7 V

R = 2 Ω

b = 2 A/V

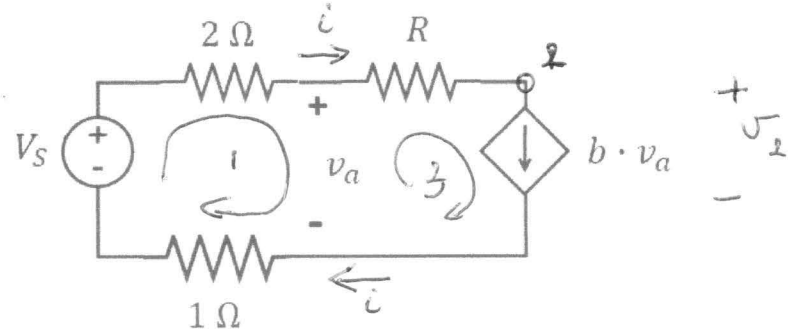

KVL 1 : $V_S = 2 \cdot i + v_a + 1 \cdot i \Rightarrow V_S = 3i + v_a$ (1)

KCL 2 : $i = b\, v_a$ (2)

(2) in (1) : $V_S = 3b\, v_a + v_a = 7 \cdot v_a \Rightarrow \boxed{v_a = 1V}$

$\overset{(2)}{\Rightarrow} i = 2 \cdot v_a = 2\ A$

KVL 3 : $v_a = R \cdot i + v_2 \Rightarrow v_2 = 1 - 2 \cdot i = -3V$

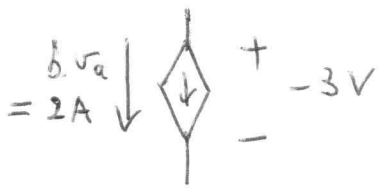

PASSIVE SIGN CONVENTION

$P = (-3) \cdot 2 = -6$

$\boxed{P = -6\ W \quad \text{RECEIVED}}$

Basic concepts 009

Problem has been graded.

The reading of the voltmeter is x and that of the ammeter is y.

What is the power *P* supplied by the VCVS?
What is the value of the current source i_s?
What is the value of the voltage source v_s?

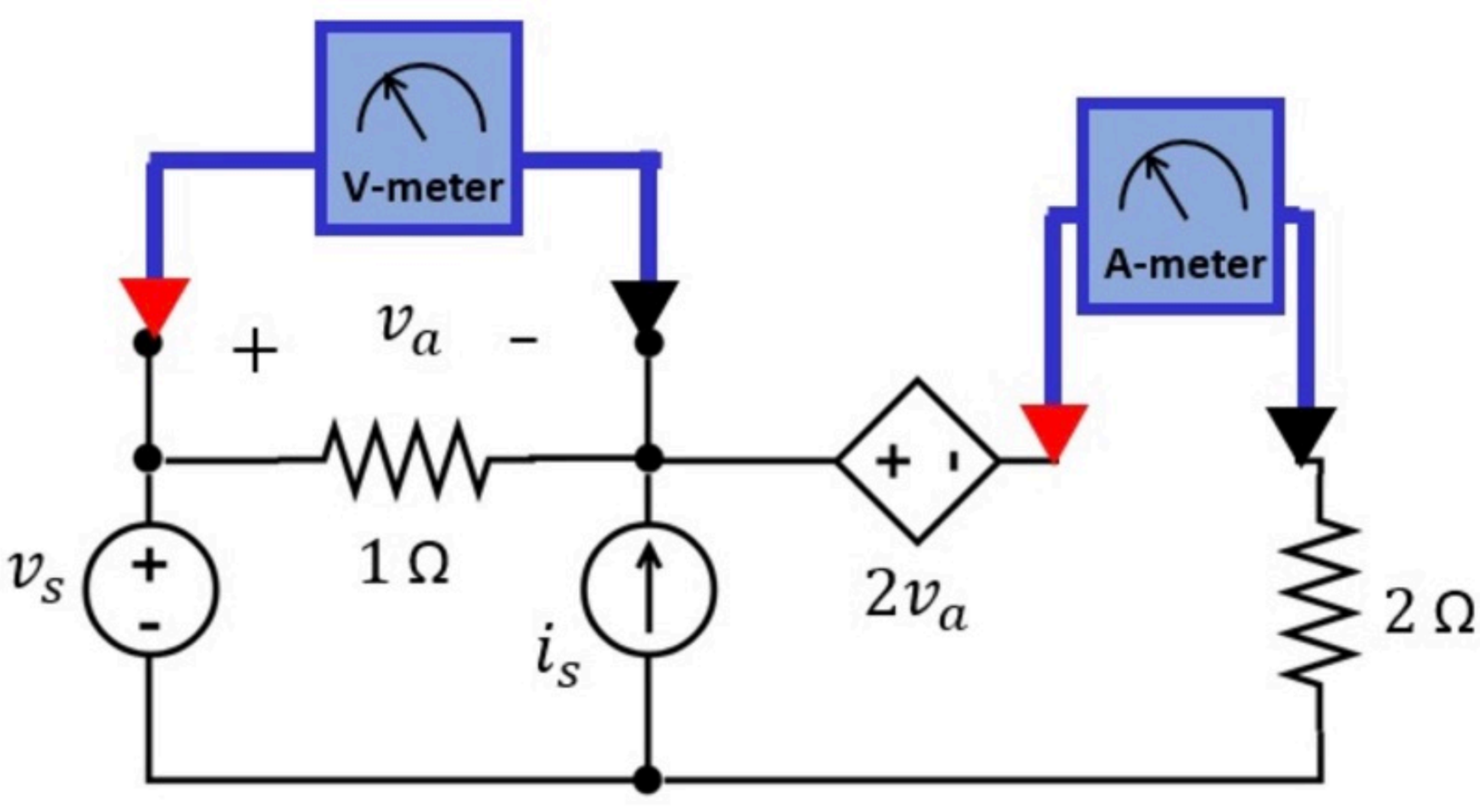

Given Variables:

x : 3 V

y : 5 A

Calculate the following:

P (W) :

i_s (A) :

v_s (V) :

The reading of the voltmeter is x and that of the ammeter is y.

What is the power P supplied by the VCVS?

What is the value of the current source i_s?

What is the value of the voltage source v_s?

X = 6 V

Y = 3 A

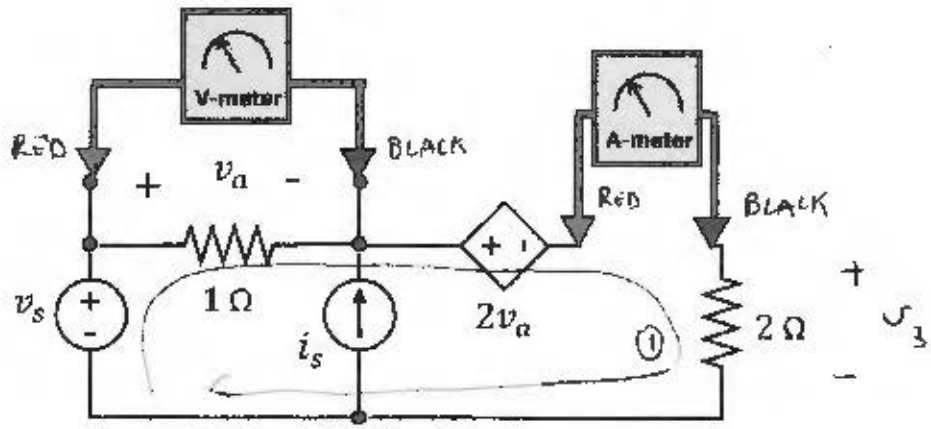

ⓐ $v_a = X = 6$

$i_1 = Y = 3$

$v_1 = 2v_a = 12$

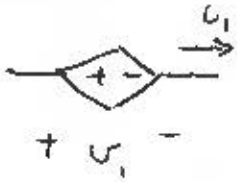

$P = v_1 \cdot i_1 = 36$ W RECEIVED

$\boxed{P = -36 \text{ W} \quad \text{SUPPLIED}}$

ⓑ

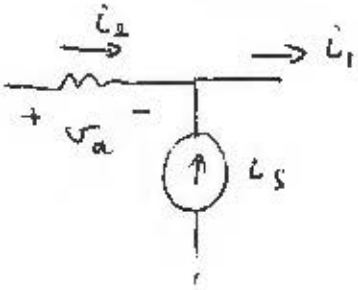

$i_2 = \frac{v_a}{1} = 6A$

KCL: $i_2 + i_s = i_1 \Rightarrow i_s = 3 - 6 = -3$

$\boxed{i_s = -3A}$

ⓒ KVL in ①:

$v_s = v_a + 2v_a + v_3$

$= 3 \cdot 6 + 6$

$= 24$

$v_3 = i_1 \cdot 2 = 6$ V

$\boxed{v_s = 24 \text{ V}}$

Basic analysis 007

Problem has been graded.

In this circuit, v_1 is an input, but you don't know what its value is. Find v_4 as a function of v_1.

More specifically, find X = $\frac{v_4}{v_1}$.

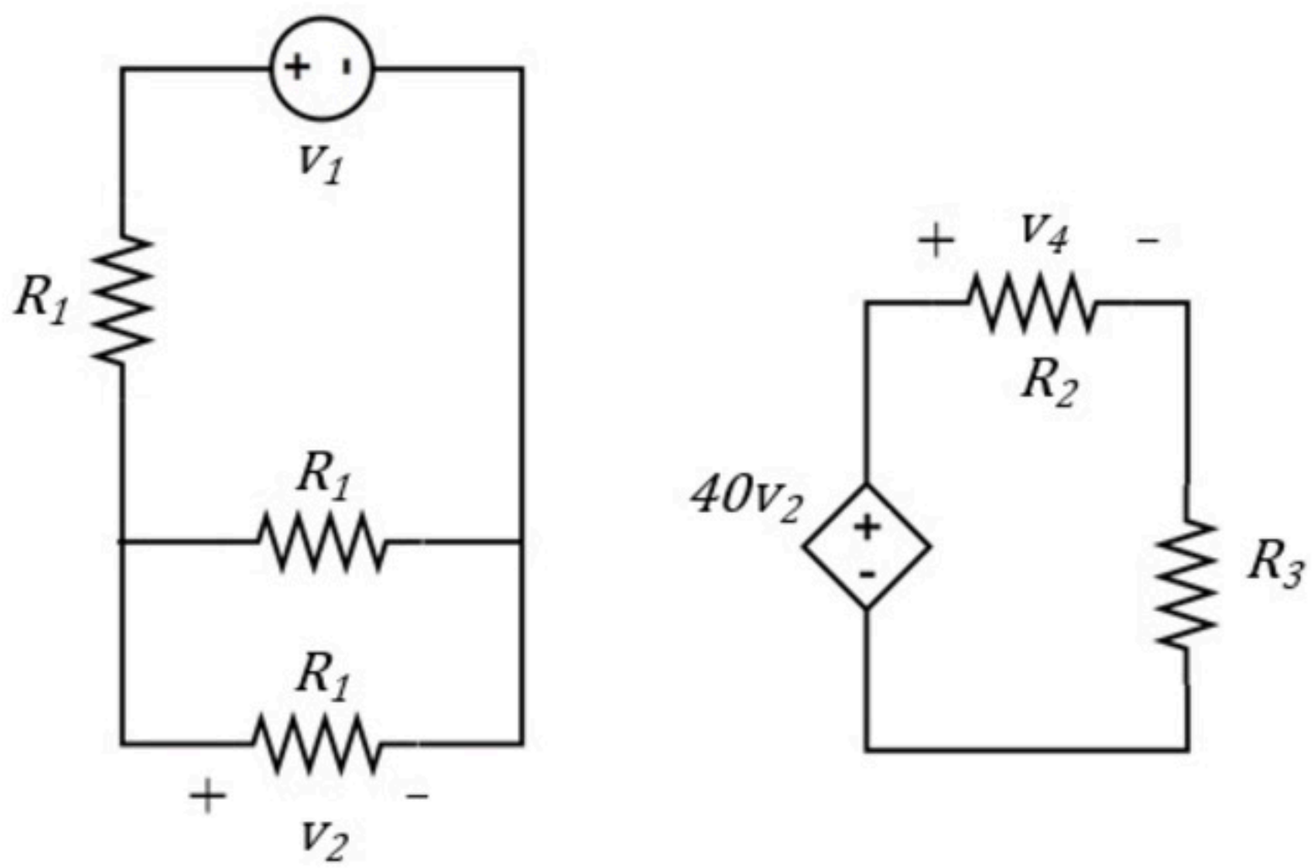

Given Variables:

R1 : 10 ohm

R2 : 3 ohm

R3 : 5 ohm

Calculate the following:

X (V/V) :

In this circuit, v_1 is an input, but you don't know what its value is. Find v_4 as a function of v_1.

More specifically, find $X = \frac{v_4}{v_1}$.

R1 = 20 Ω

R2 = 12 Ω

R3 = 20 Ω

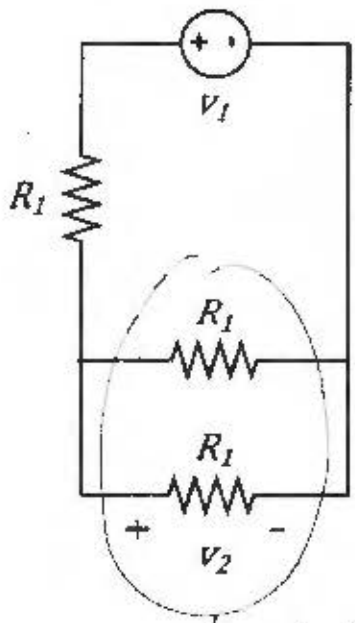

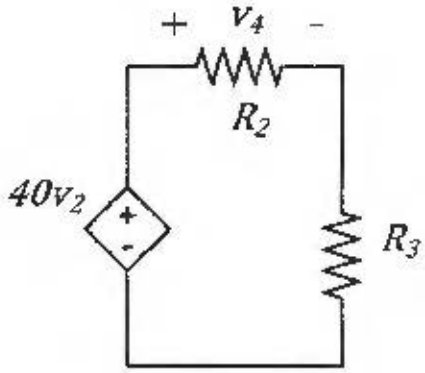

$$\hookrightarrow R_1 \parallel R_1 = \left(\frac{1}{R_1} + \frac{1}{R_1}\right)^{-1} = \left(\frac{2}{R_1}\right)^{-1} = \frac{R_1}{2}$$

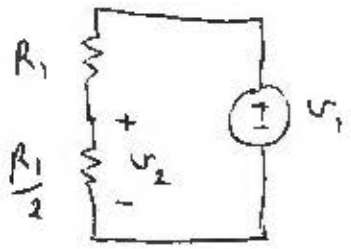

VOLTAGE DIVIDER

$$v_2 = v_1 \cdot \frac{\frac{R_1}{2}}{R_1 + \frac{R_1}{2}} = v_1 \frac{\frac{1}{2}}{1 + \frac{1}{2}} = \frac{v_1}{3}$$

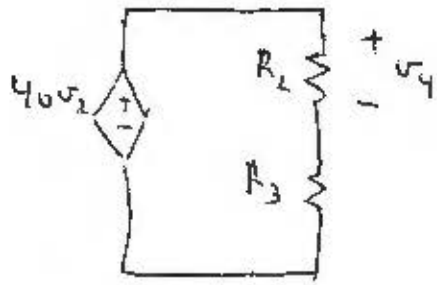

VOLTAGE DIVIDER

$$v_4 = 40\, v_2 \cdot \frac{R_2}{R_2 + R_3} = \overset{5}{\cancel{40}} \cdot \frac{v_1}{\cancel{3}} \; \frac{\cancel{12}}{\cancel{3}\,\cancel{4}}$$

$$= 5\, v_1$$

$$\boxed{X = \frac{v_4}{v_1} = 5}$$

Basic analysis 009

Problem has been graded.

You are given that the equivalent resistance between *A* and *B* is R_{eq}. Find the value of R_3.

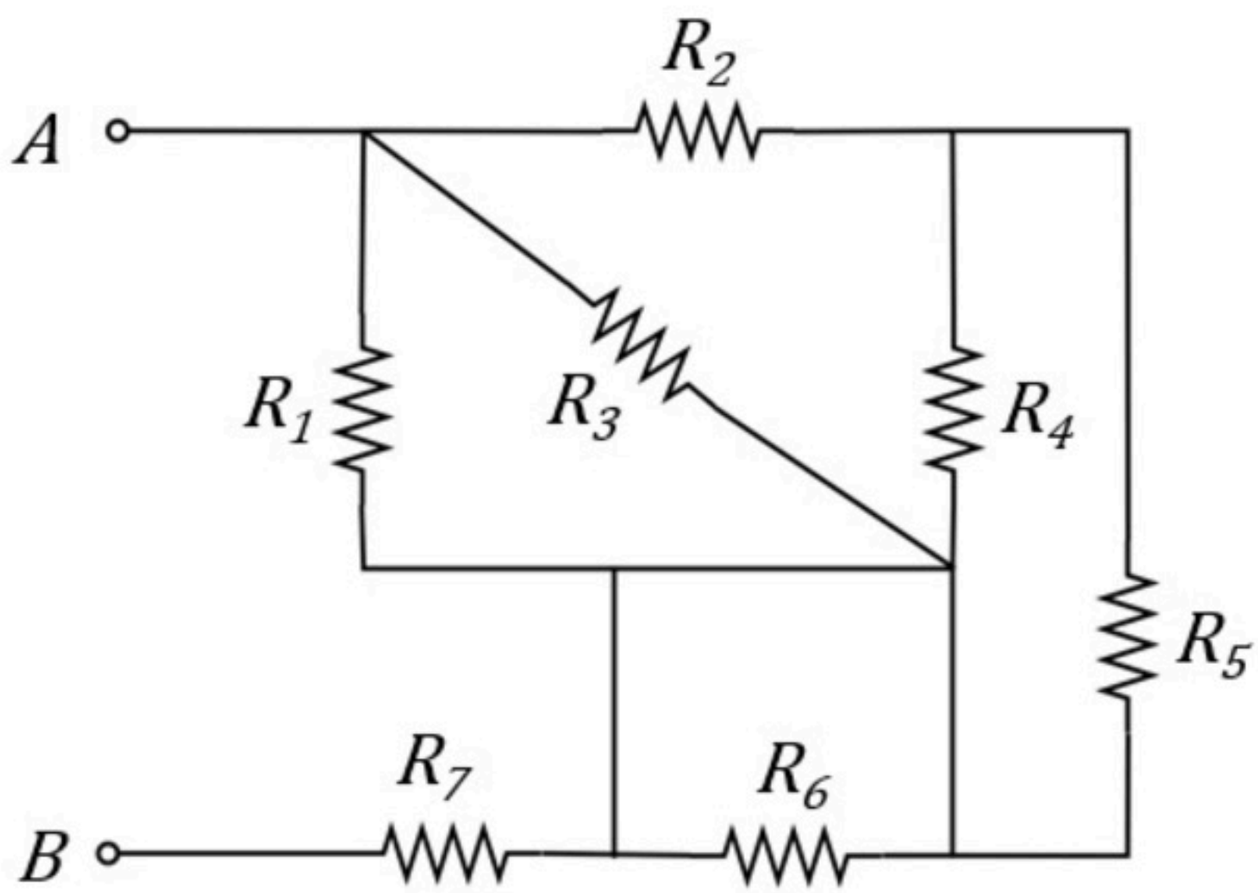

Given Variables:

Req : 8 ohm

R1 : 3 ohm

R2 : 4 ohm

R4 : 24 ohm

R5 : 12 ohm

R6 : 12 ohm

R7 : 6 ohm

Calculate the following:

R3 (ohm) :

You are given that the equivalent resistance between A and B is R_{eq}. Find the value of R_3.

Req = 8 Ω

R1 = 6 Ω

R2 = 4 Ω

R4 = 40 Ω

R5 = 10 Ω

R6 = 12 Ω

$R_7 = 5\,\Omega$

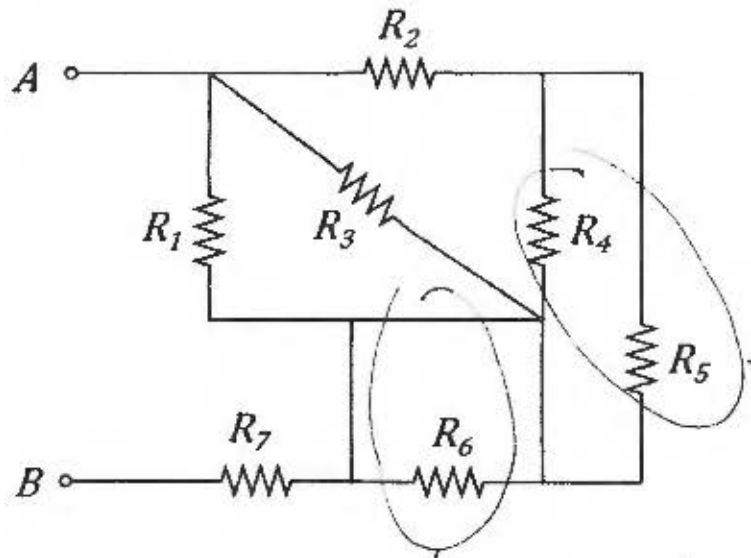

$R_4 // R_5$

$= \left(\frac{1}{40} + \frac{1}{10}\right)^{-1}$

$= \left(\frac{1+4}{40}\right)^{-1} = 8\,\Omega$

$R_6 // 0 = \left(\frac{1}{R_6} + \frac{1}{0}\right)^{-1}$

$= (\infty)^{-1} = 0\,\Omega$

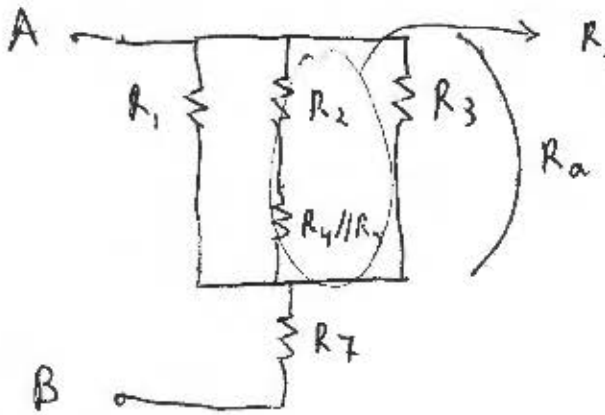

$R_2 + R_4 // R_5 = 4 + 8 = 12\,\Omega$

$R_{eq} = R_a + R_7 \Rightarrow R_a = -R_7 + R_{eq}$

$= 3\,\Omega$

$$\frac{1}{R_a} = \frac{1}{R_1} + \frac{1}{12} + \frac{1}{R_3}$$

$$\frac{1}{R_3} = \frac{1}{R_a} - \frac{1}{R_1} - \frac{1}{12} = \frac{1}{3} - \frac{1}{6} - \frac{1}{12} = \frac{4-2-1}{12}$$

$$\boxed{R_3 = 12\,\Omega}$$

Basic Analysis 010b

No more attempts left.

Find the ammeter reading *X* and the volt-meter reading *Y*.

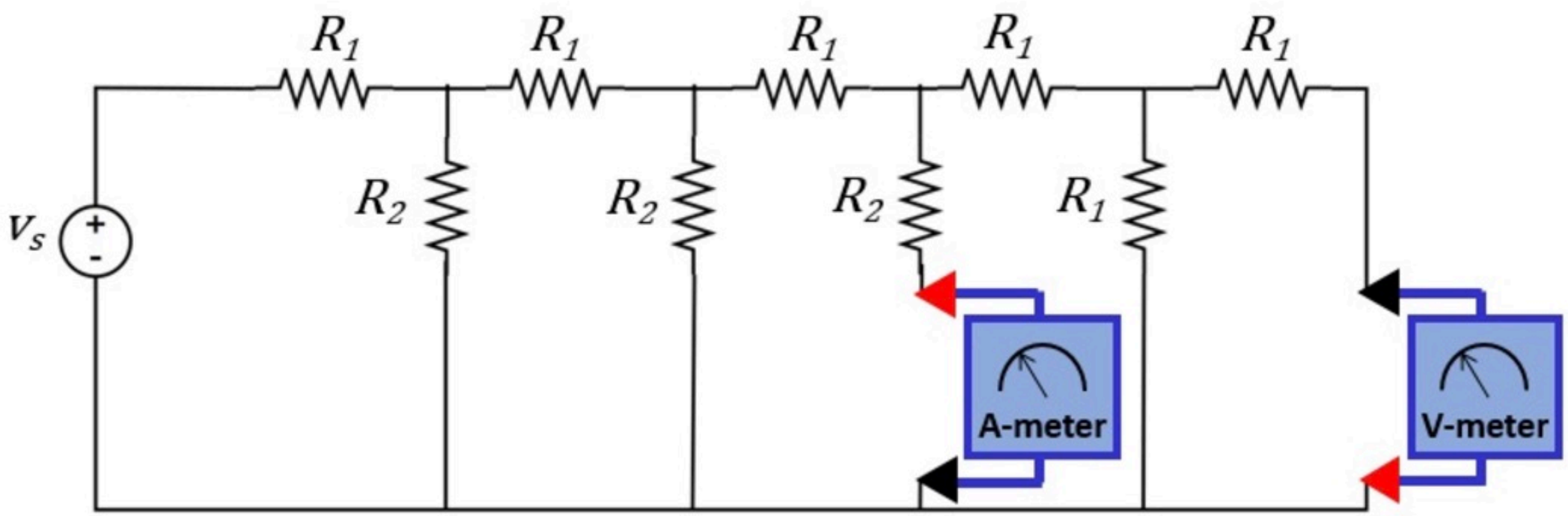

Given Variables:

vs : 32 V

R1 : 2 ohm

R2 : 4 ohm

Calculate the following:

X (A) :

Y (V) :

Hint: First find the current through Vs. Use series/parallel. Then find X with current divider.

Find the ammeter reading *X* and the volt-meter reading *Y*.

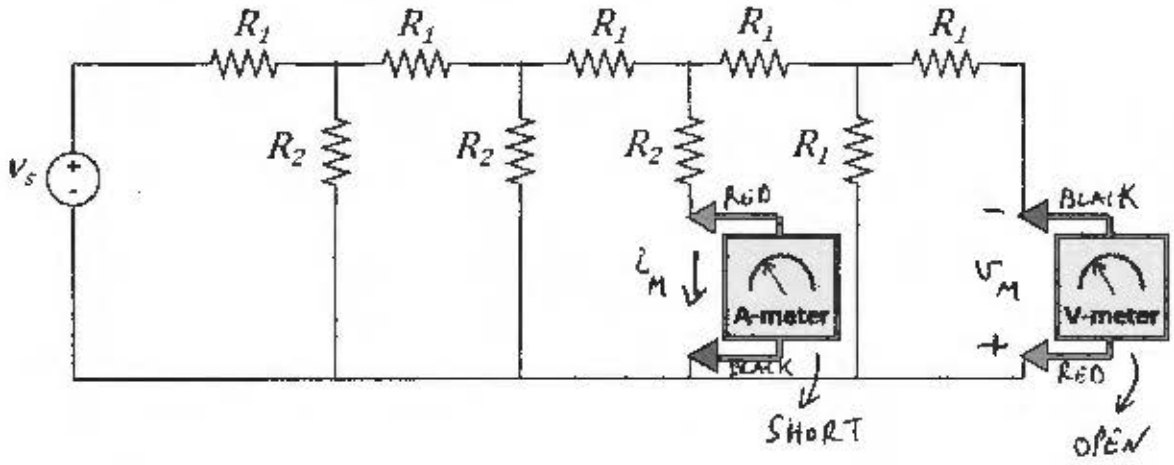

vs = 80 V

R1 = 1 Ω

R2 = 2 Ω

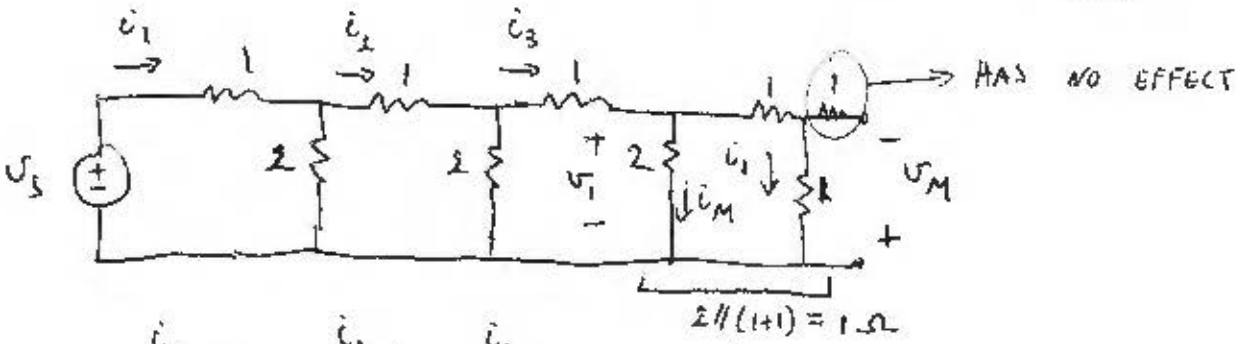

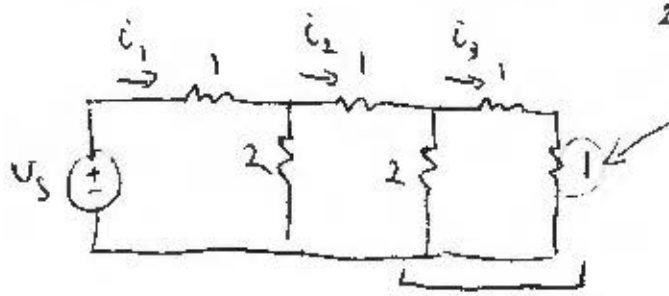

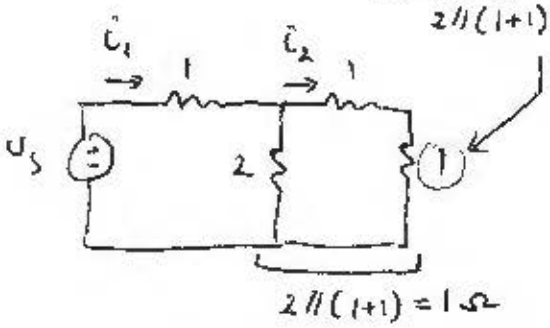

$$i_1 = \frac{v_s}{1+1} = 40$$

$$i_2 = i_1 \frac{2}{2+2} = 20 \quad \text{(CURRENT DIVIDER)}$$

$$i_3 = i_2 \frac{2}{2+2} = 10 \quad \text{(CURRENT DIVIDER)}$$

$$i_M = i_3 \cdot \frac{2}{2+2} = 5 \quad \text{(CURRENT DIVIDER)}$$

$$\boxed{X = 5\,A}$$

$$v_1 = 2 \cdot i_M = 10$$

$$i_1 = i_M = 5 \Rightarrow -v_M = 1 \cdot i_1 = 5$$

$$\boxed{Y = -5\,V}$$

Basic analysis 012

Problem has been graded.

Determine the voltages v_1, v_2, v_3 and v_4 and the currents i_1 and i_2.

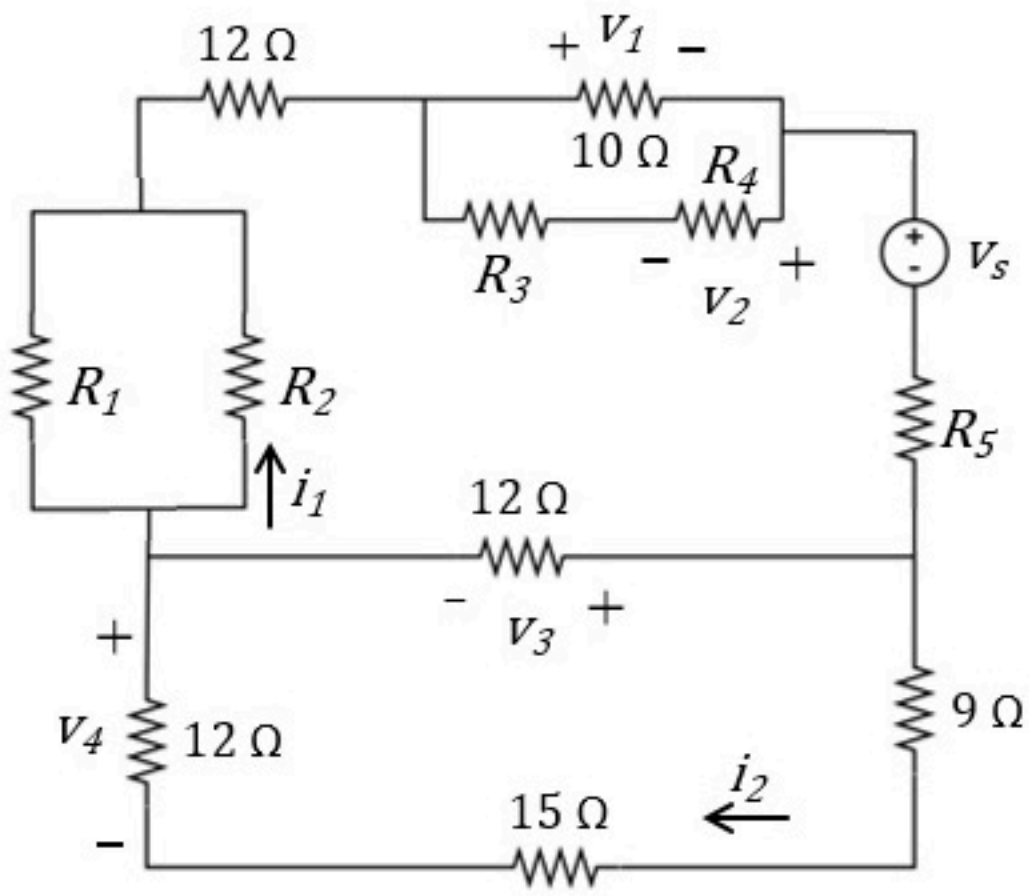

Given Variables:

vs : 80 V

R1 : 24 ohm

R2 : 8 ohm

R3 : 6 ohm

R4 : 9 ohm

R5 : 7 ohm

Calculate the following:

v1 (V) :

v2 (V) :

v3 (V) :

v4 (V) :

i1 (A) :

i2 (A) :

Determine the voltages v_1, v_2, v_3 and v_4 and the currents i_1 and i_2.

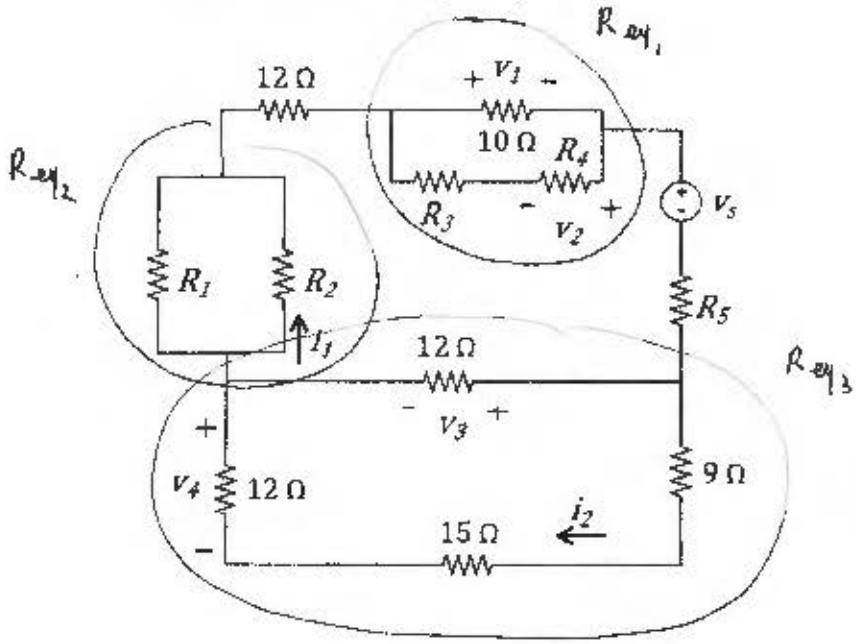

Vs = 80 V

R1 = 8 Ω

R2 = 24 Ω

R3 = 3 Ω

R4 = 12 Ω

R5 = 7 Ω

$$R_{eq_1} = \left(\frac{1}{10} + \frac{1}{3+12}\right)^{-1} = 6\,\Omega$$

$$R_{eq_2} = \left(\frac{1}{8} + \frac{1}{24}\right)^{-1} = 6\,\Omega$$

$$R_{eq_3} = \left(\frac{1}{12} + \frac{1}{12+15+9}\right)^{-1} = 9\,\Omega$$

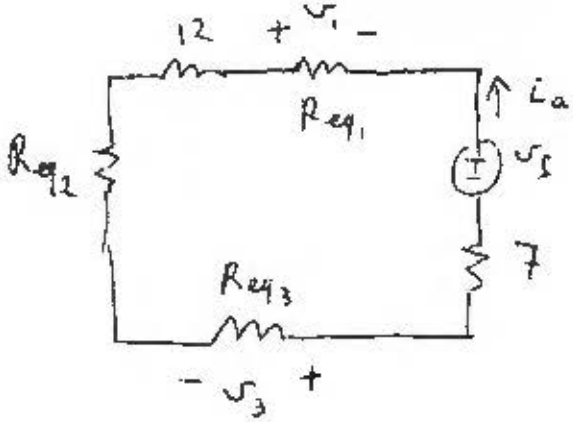

$$i_a = \frac{v_s}{R_{eq_1} + 12 + R_{eq_2} + R_{eq_3} + 7} = \frac{v_s}{40} \Rightarrow i_a = 2\,A$$

$$v_1 = (-i_a)\cdot R_{eq_1} = (-2)\cdot 6 = -12\,V \qquad \boxed{v_1 = -12\,V}$$

$$v_2 = (-v_1)\cdot\frac{R_4}{R_3+R_4} = 12\cdot\frac{\cancel{12}^{4}}{\cancel{15}\,5} = \frac{48}{5}\,V \qquad \boxed{v_2 = 9.6\,V}$$

$$v_3 = (-i_a)\,R_{eq_3} = (-2)\;9 = -18\,V \qquad \boxed{v_3 = -18\,V}$$

$$v_4 = (-v_3)\,\frac{12}{12+15+9} = 18\cdot\frac{\cancel{12}^{1}}{\cancel{36}\,3} = 6\,V \qquad \boxed{v_3 = 6\,V}$$

$$i_1 = (-i_a)\,\frac{R_1}{R_1+R_2} = (-2)\;\frac{8}{32} = -0.5\,A \qquad \boxed{i_1 = -0.5\,A}$$

$$i_2 = (-i_a)\cdot\frac{12}{12+12+15+9} = (-2)\cdot\frac{12}{48} = -0.5\,A \qquad \boxed{i_2 = -0.5\,A}$$

Basic analysis 014

No more attempts left.

What is the reading *X* from the ammeter?

What would be the reading *Y* if we replaced the ammeter by a volt-meter?

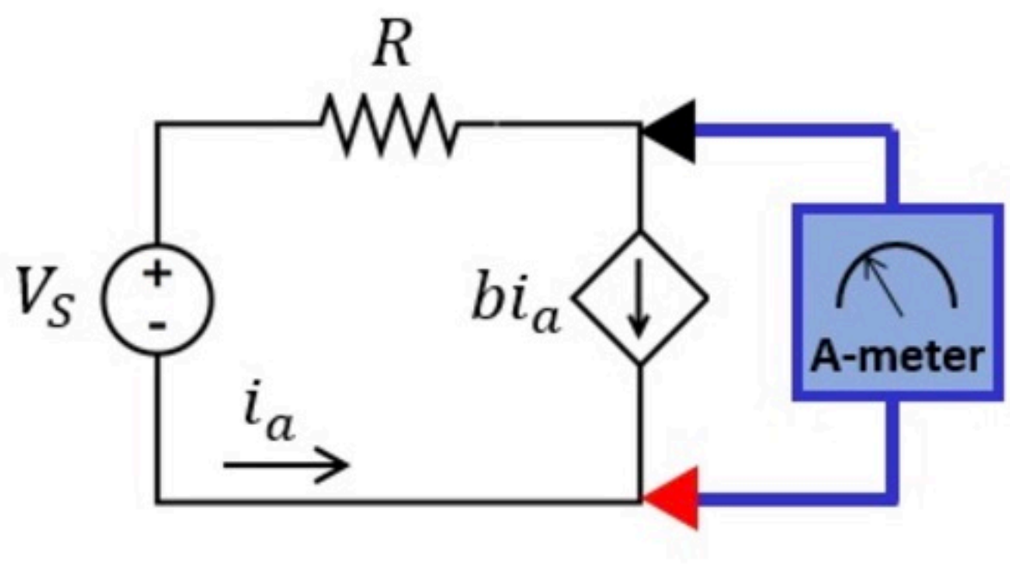

Given Variables:

Vs : 8 V

R : 4 ohm

b : 2 A/A

Calculate the following:

X (A) :

Y (V) :

Hint: Ammeters and volt meters behave as short and open circuits respectively. Trust the math.

(a) What is the reading *X* from the ammeter?

(b) What would be the reading *Y* if we replaced the ammeter by a volt-meter?

Vs = 6 V

R = 2 Ω

b = 2 A/A

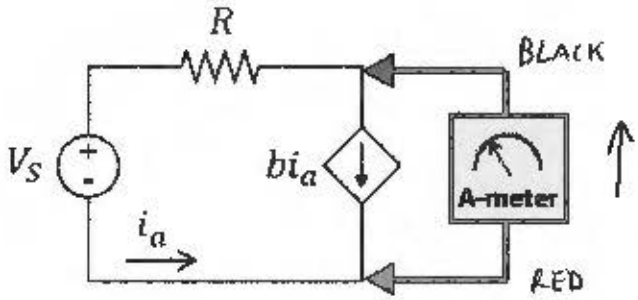

(a)

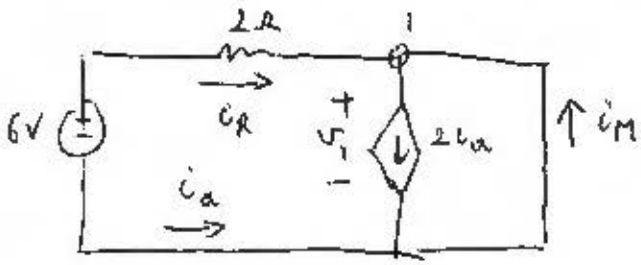

AMMETER EQUIVALENT TO A SHORT

$\Rightarrow v_1 = 0V$

$\Rightarrow i_R = \frac{6 - v_1}{R} = \frac{6}{2} = 3A$

$\Rightarrow i_a = -i_R = -3A$

KCL @ 1 : $i_R + i_M = 2i_a$

$i_M = 2i_a - i_R = 3i_a = -9$

$\boxed{X = -9A}$

(b)

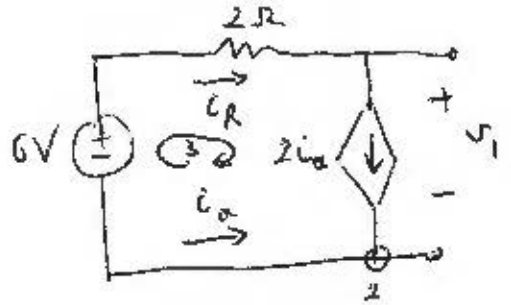

V-METER EQUIVALENT TO AN OPEN

KCL @ 2 : $i_a + 2i_a = 0 \Rightarrow 3i_a = 0 \Rightarrow i_a = 0$

$\Rightarrow i_R = 0$

KVL 3 : $6V = i_R \cdot 2 + v_1 \Rightarrow v_1 = 6V$

$\boxed{Y = 6V}$

Basic Analysis 015

Problem has been graded.

Find v_a, v_b and i_c .

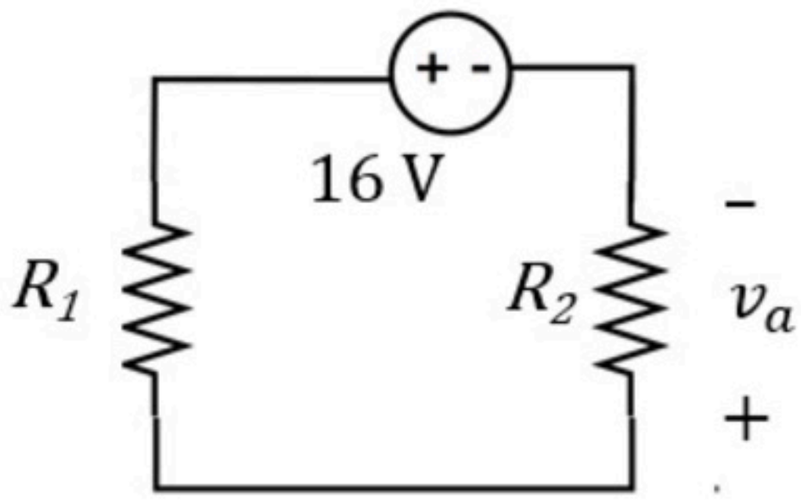

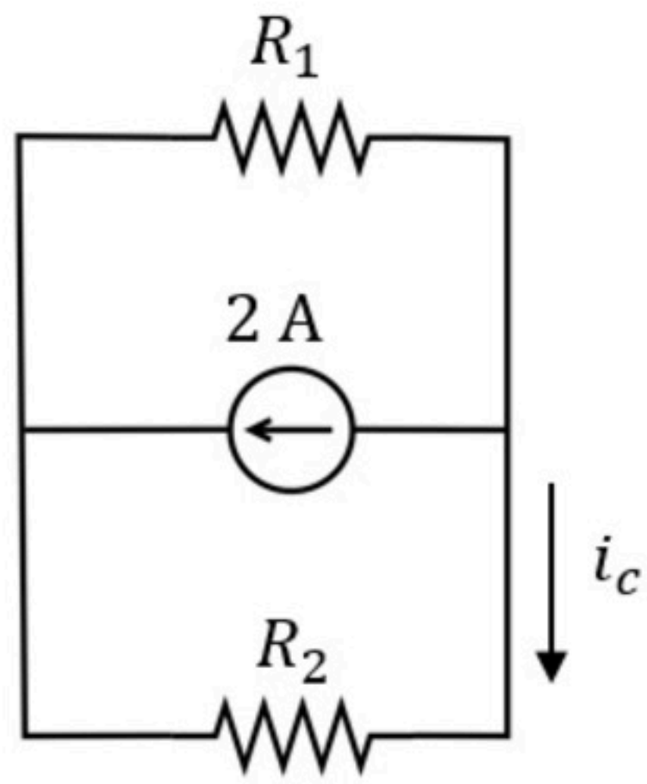

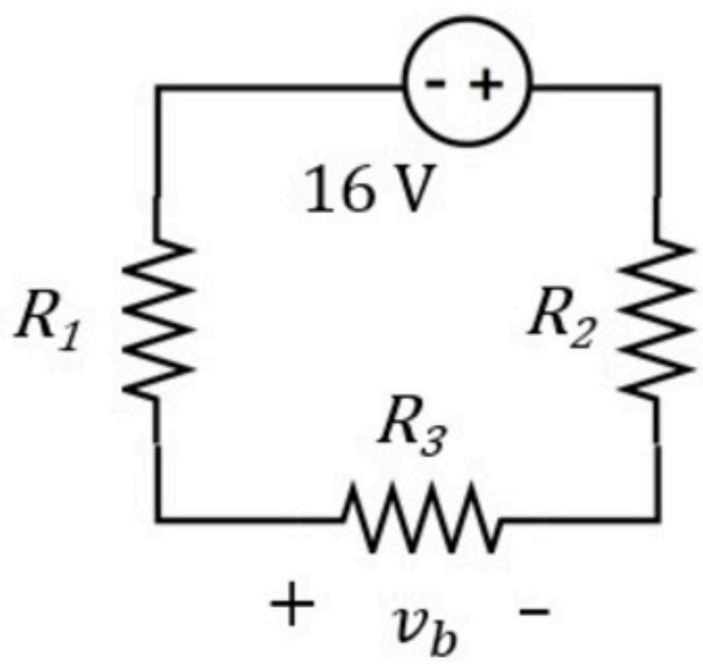

Given Variables:

R1 : 2 ohm

R2 : 6 ohm

R3 : 2 ohm

Calculate the following:

va (V) :

vb (V) :

ic (A) :

Find v_a, v_b and i_c .

R1 = 2 Ω

R2 = 6 Ω

R3 = 2 Ω

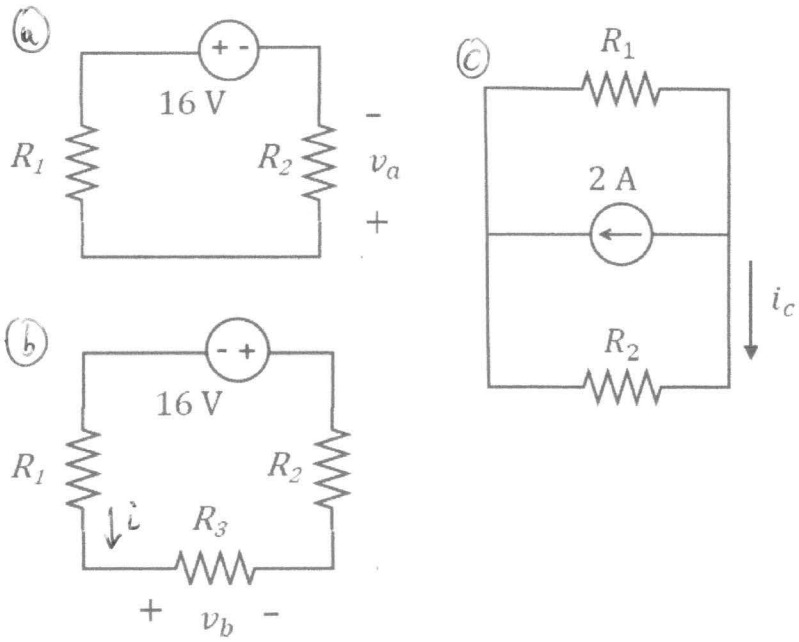

(a) VOLTAGE DIVIDER: $v_a = 16 \cdot \frac{R_2}{R_1+R_2} = 16 \cdot \frac{6}{2+6} = 12$

$$\boxed{v_a = 12V}$$

(b) VOLTAGE DIVIDER: $v_b = (-16) \frac{R_3}{R_1+R_2+R_3} = (-16) \frac{2}{2+6+2} = -3.2$

$$\boxed{v_b = -3.2\ V}$$

BTW: WHERE THIS COMES FROM

$$i = \frac{(-16)}{R_1+R_2+R_3} \quad \text{AND} \quad v_b = R_3 \cdot i$$

$$\Rightarrow v_b = (-16) \frac{R_3}{R_1+R_2+R_3}$$

(c) CURRENT DIVIDER: $i_c = (-2) \frac{R_1}{R_1+R_2} = (-2) \cdot \frac{2}{2+6} = -0.5$

$$\boxed{i_c = -0.5\ A}$$

Basic concepts 007

Problem has been graded.

Find the power P_1 supplied by the current source and the power P_2 supplied by the voltage source.

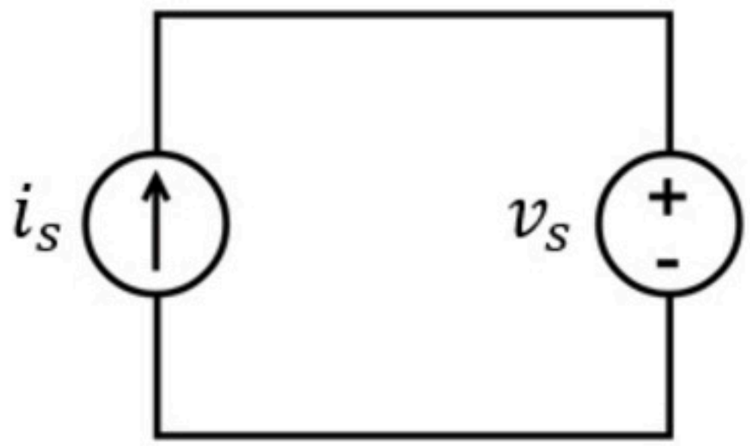

Given Variables:

v_s : 10 V

i_s : 6 A

Calculate the following:

P_1 (W) :

P_2 (W) :

Hint: The voltage across a current source can be non-zero

Find the power P_1 supplied by the current source and the power P_2 supplied by the voltage source.

Vs = 10 V

Is = 4 A

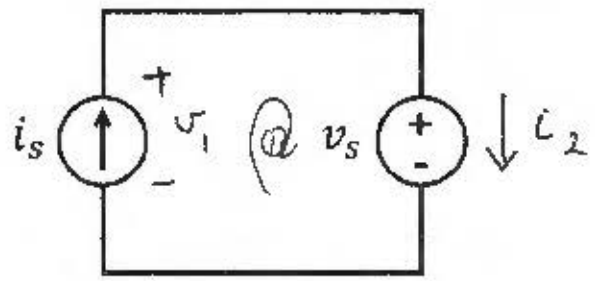

KVL ①: $v_1 = v_s = 10\,V$

KCL : $i_2 = i_s = 4\,A$

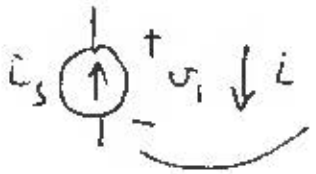

for passive sign convention

$P_1 = v_1 \cdot i = 10\,(-4) = -40\,W$ received

$i = -i_s = -4\,A$

$\boxed{P_1 = 40\,W \text{ supplied}}$

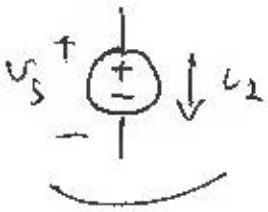

already passive sign convention

$P_2 = v_s \cdot i_2 = 10\;4 = 40\,W$ received

$\boxed{P_2 = -40\,W \text{ supplied}}$

<u>Check</u>: $\sum_{\text{received}} P = \sum_{\text{supplied}} P \Rightarrow 0 = 40 - 40$

<u>OK</u>

Basic Concepts 008b

Problem has been graded.

The current source supplies 100 W of power.

What is the current i_1?
What is the voltage v_1?
What is the value of the voltage source v_s?

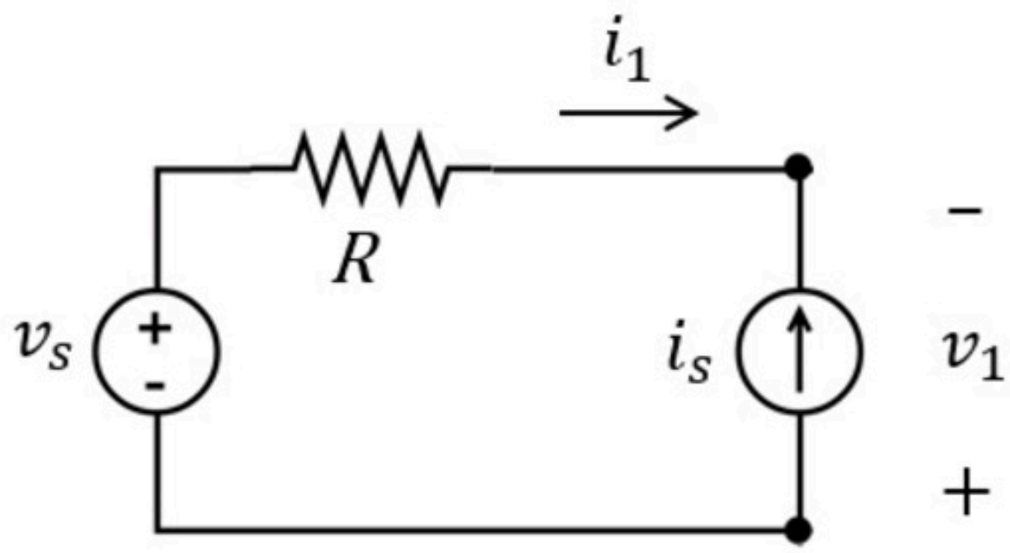

Given Variables:

R : 5 ohm

i_s : 10 A

Calculate the following:

i1 (A) :

v1 (V) :

vs (V) :

Hint: Check the signs

The current source supplies 100 W of power.

What is the current i_1?

What is the voltage v_1?

What is the value of the voltage source v_s?

R = 2 Ω

is = 25 A

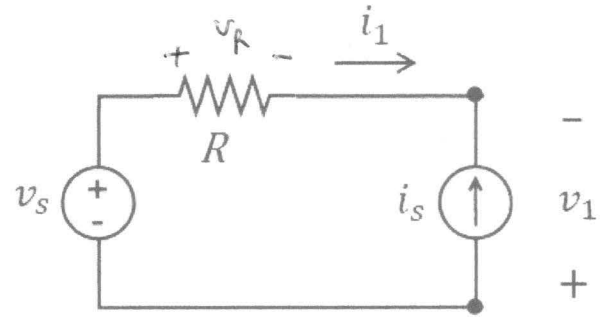

$i_1 = -i_s$

$\boxed{i_1 = -25\ A}$

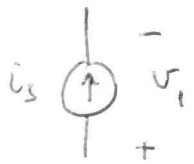

PASSIVE SIGN CONVENTION

$P = 100W$ SUPPLIED $\Rightarrow$ $P = -100W$ RECEIVED

$= i_s \cdot v_1$

$\Downarrow$

$v_1 = -\frac{100}{25} = -4V$

$\boxed{v_1 = -4V}$

KVL: $v_s + v_1 = v_R$

$v_s = v_R - v_1 = R \cdot i_1 - v_1 = 2(-25) - (-4)$

$= -50 + 4 = -46$

$\boxed{v_s = -46\ V}$

PP - Basic concepts 009

Problem has been graded.

Find the power supplied by the current source and the voltage source.

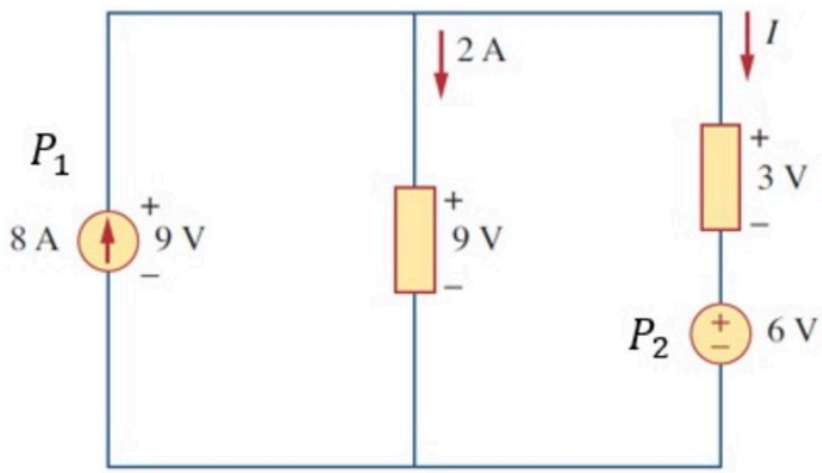

Given Variables:

. : . .

Calculate the following:

P1 (W) :

72 ✓

P2 (W) :

-36 ✓

Hint: Use KCL to find the missing current

Basic concepts 010

Problem has been graded.

Find the currents i_1, i_2, i_3 and i_4.

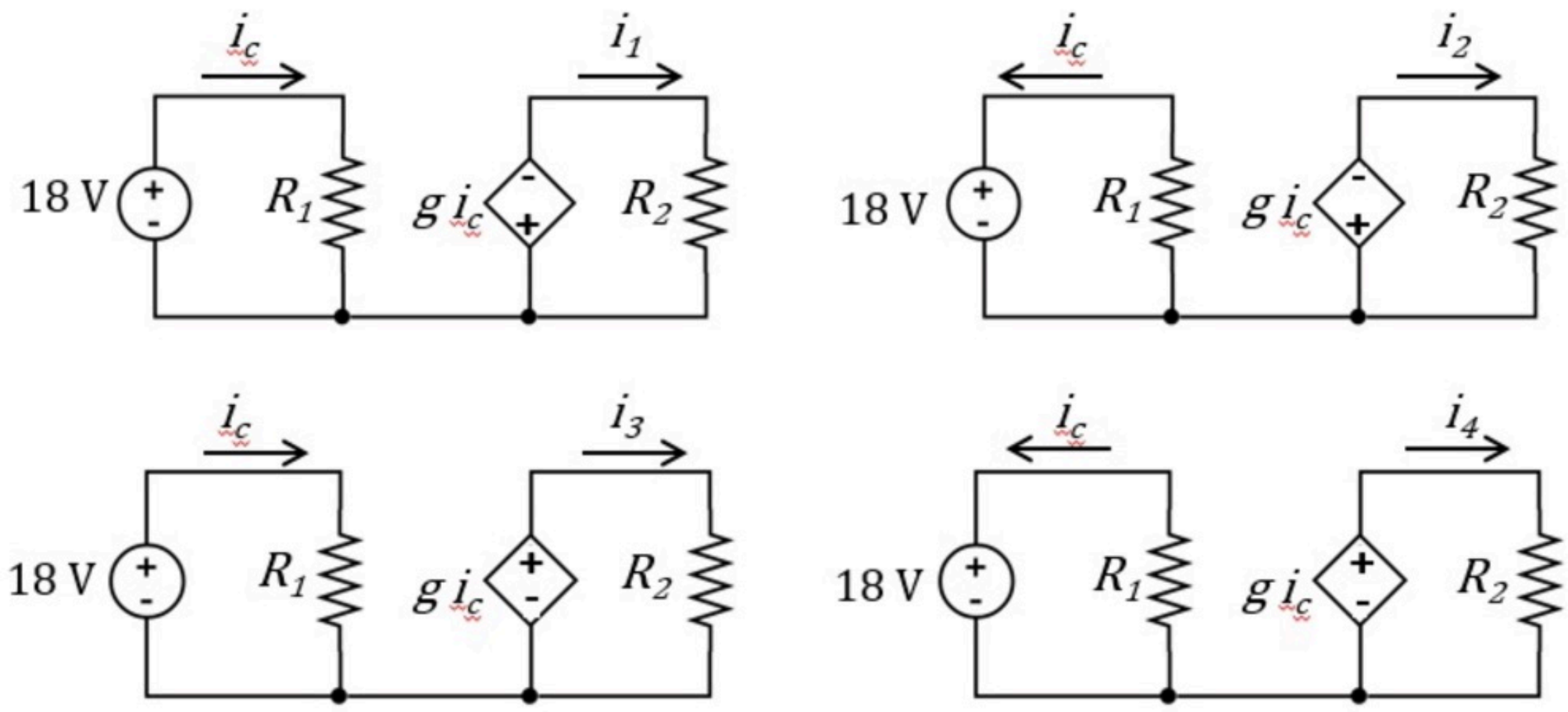

Given Variables:

R_1 : 4 ohm

R_2 : 9 ohm

g : 6 V/A

Calculate the following:

i_1 (A) :

i_2 (A) :

i_3 (A) :

i_4 (A) :

Hint: Check the signs of the sources and the current arrows

Find the currents i_1, i_2, i_3 and i_4.

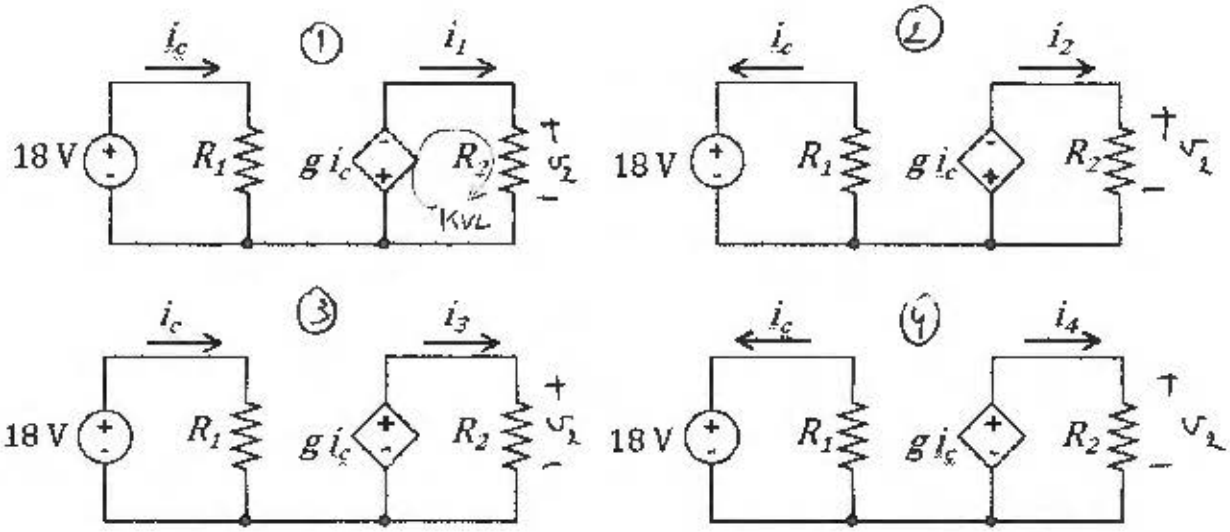

R1 = 4 Ω

R2 = 3 Ω

g = 2 V/A

in ①. $i_c = \frac{18}{R_1} = 4.5\,A$

KVL in right part. $g i_c + v_2 = 0$

$\Rightarrow v_2 = -g i_c = -9V$

$i_1 = \frac{v_2}{R_2} = \frac{-9}{3} \Rightarrow \boxed{i_1 = -3\,A}$

in ②: $i_c = -4.5A$

$v_2 = -g i_c = 9V$

$i_2 = \frac{v_2}{R_2} = \frac{9}{3}$

$\boxed{i_2 = 3A}$

in ③. $i_c = 4.5A$

$v_2 = g i_c = 9V$

$i_3 = \frac{v_2}{R_2} = \frac{9}{3}$

$\boxed{i_3 = 3A}$

in ④: $i_c = -4.5A$

$v_2 = g i_c = -9V$

$i_4 = \frac{v_2}{R_2} = \frac{-9}{3}$

$\boxed{i_4 = -3A}$

PP - Basic concepts 010

Problem has been graded.

Find the power supplied by each of the elements.

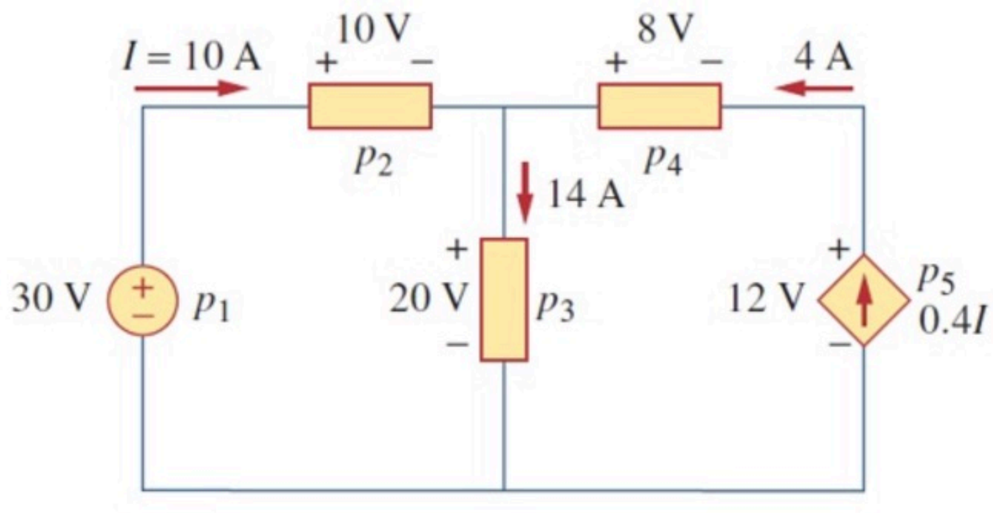

Given Variables:

. : . .

Calculate the following:

p1 (W) :

300 ✓

p2 (W) :

-100 ✓

p3 (W) :

-280 ✓

p4 (W) :

32 ✓

p5 (W) :

48 ✓

Hint: Check with conservation of power.

PP - Basic concepts 011

Problem has been graded.

Find the power received by each of the elements.

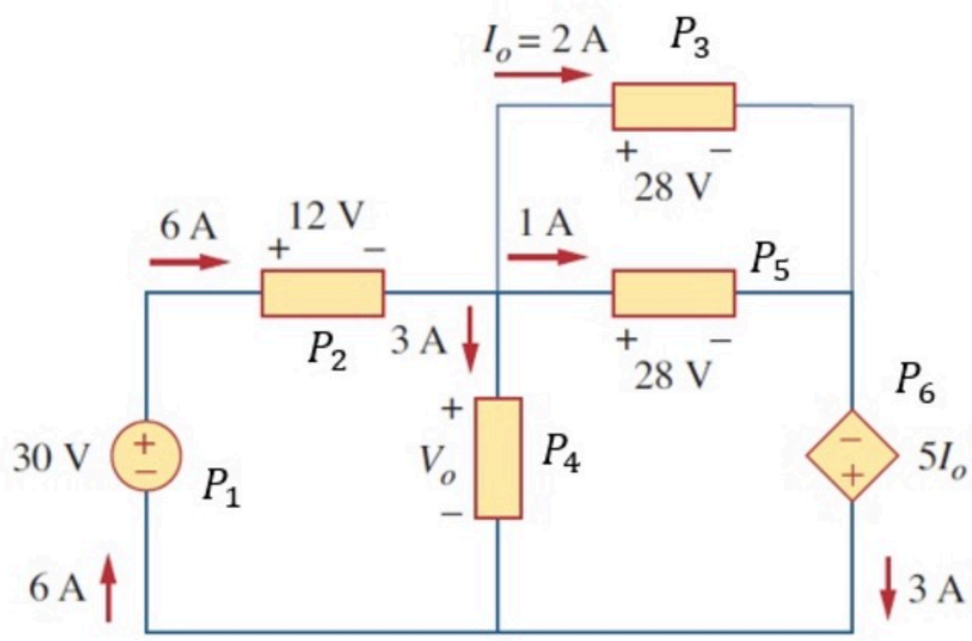

Given Variables:

. : . .

Calculate the following:

P1 (W) :

-180 ✓

P2 (W) :

72 ✓

P3 (W) :

56 ✓

P4 (W) :

54 ✓

P5 (W) :

28 ✓

P6 (W) :

-30 ✓

Hint: Use KVL. Check with conservation of power.

Basic Analysis 001b

Problem has been graded.

We measure v_1 and v_2.
Determine the values of resistances R_2 and R_3.

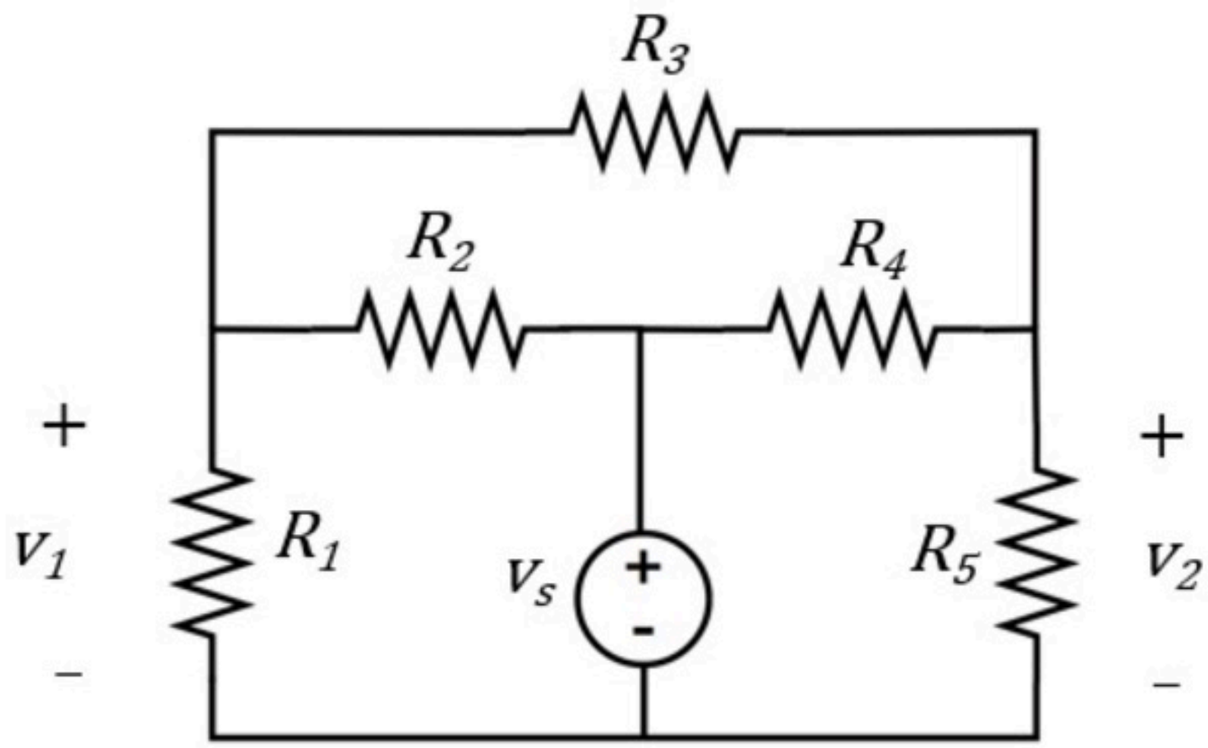

Given Variables:

R1 : 12 ohm

R4 : 12 ohm

R5 : 2 ohm

vs : 30 V

v1 : 12 V

v2 : 6 V

Calculate the following:

R2 (ohm) :

R3 (ohm) :

Hint: Find the currents and use Ohm's Law.

We measure v_1 and v_2.
Determine the values of resistances R_2 and R_3.

R1 = 12 Ω

R4 = 9 Ω

R5 = 2 Ω

vs = 24 V

v1 = 12 V

v2 = 6 V

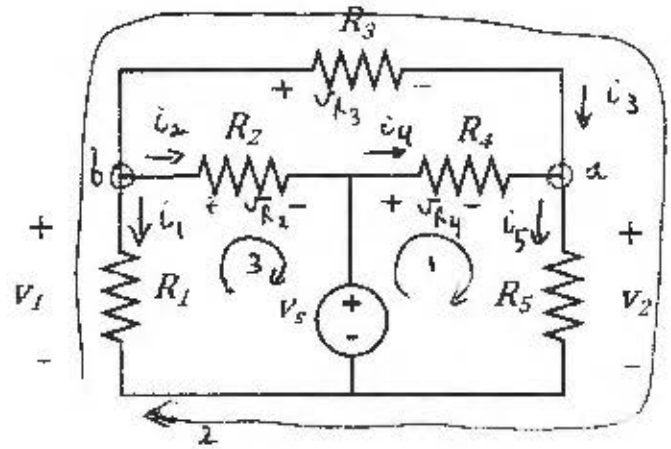

$$i_1 = \frac{v_1}{R_1} = \frac{12}{12} = 1 \qquad i_5 = \frac{v_2}{R_5} = \frac{6}{2} = 3$$

KVL 1: $v_s = v_{R_4} + v_2 \Rightarrow v_{R_4} = v_s - v_2 = 24 - 6 = 18$

$$i_4 = \frac{v_{R_4}}{R_4} = \frac{18}{9} = 2$$

KCL a: $i_3 + i_4 = i_5 \Rightarrow i_3 = i_5 - i_4 = 3 - 2 = 1$

KVL 2: $v_1 = v_{R_3} + v_2 \Rightarrow v_{R_3} = v_1 - v_2 = 6$

$$R_3 = \frac{v_{R_3}}{i_3} = \frac{6}{1} \Rightarrow \boxed{R_3 = 6\,\Omega}$$

KCL b. $i_1 + i_2 + i_3 = 0 \Rightarrow i_2 = -i_1 - i_3 = -1 - 1 = -2$

KVL 3: $v_1 = v_{R_2} + v_s \Rightarrow v_{R_2} = v_1 - v_s = 12 - 24 = -12$

$$R_2 = \frac{v_{R_2}}{i_2} = \frac{-12}{-2} \Rightarrow \boxed{R_2 = 6\,\Omega}$$

PP - Basic analysis 001

Problem has been graded.

This circuit contains an ohmmeter. An ohmmeter is an instrument that measures the equivalent resistance of the circuit connected to its terminals. Note that you can set a multimeter to the ohm-setting to act as an ohmmeter, as you can test in the lab.

Determine the resistance, R, measured by the ohmmeter.

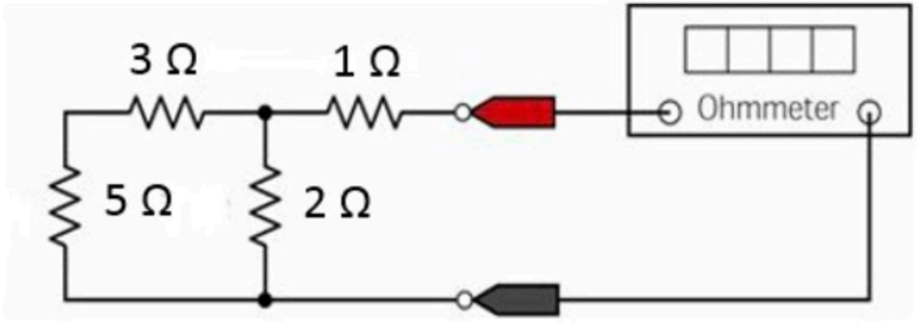

Given Variables:

. : . .

Calculate the following:

R (ohm) :

2.6

Hint: Use series and parallel connection of resistors

PP - Basic analysis 002

Problem has been graded.

Find values of v1, i1, v2 and i2.

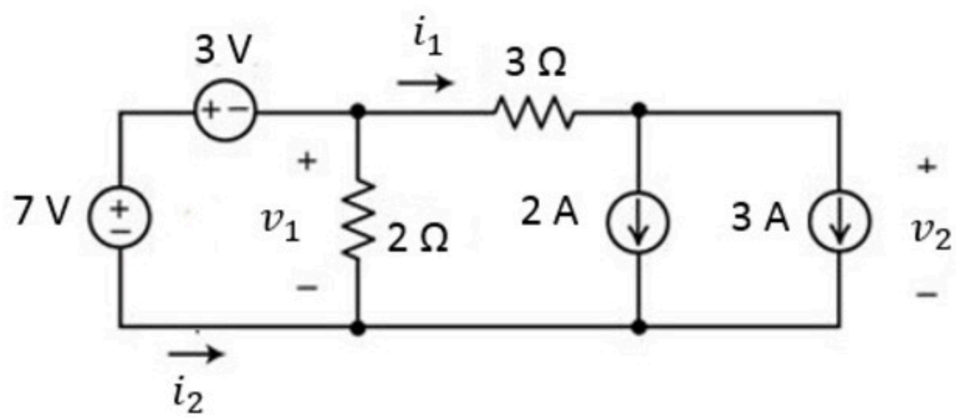

Given Variables:

. : . .

Calculate the following:

v1 (V) :

4 ✓

i1 (A) :

5 ✓

v2 (V) :

-11 ✓

i2 (A) :

-7 ✓

Hint: Use KVL and KCL

PP - Basic analysis 003

Unlimited Attempts.

What is the reading X from the ammeter?

What would be the reading Y if I replaced the ammeter by a volt-meter?

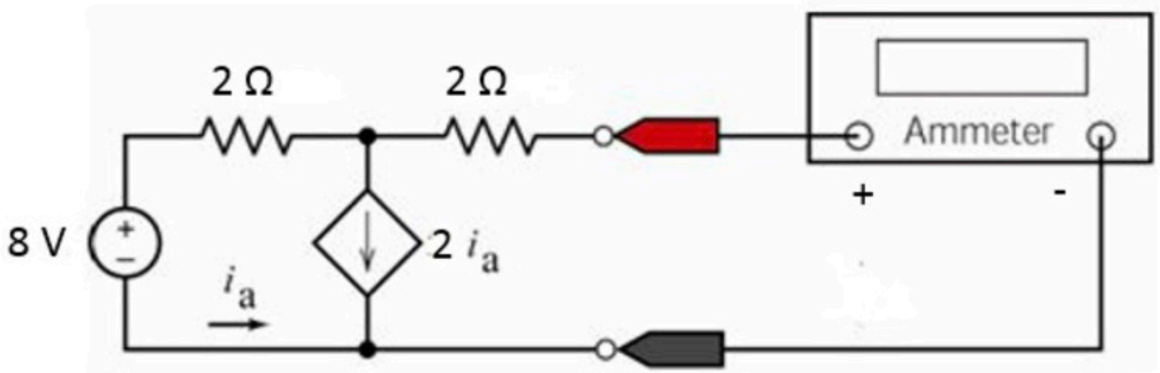

Given Variables:

. : . .

Calculate the following:

X (A) :

3 ✓

Y (V) :

8 ✓

Hint: Ammeters and volt meters behave as short and open circuits respectively

Basic analysis 004

Problem has been graded.

Determine the voltages v_1, v_2, v_3 and v_4

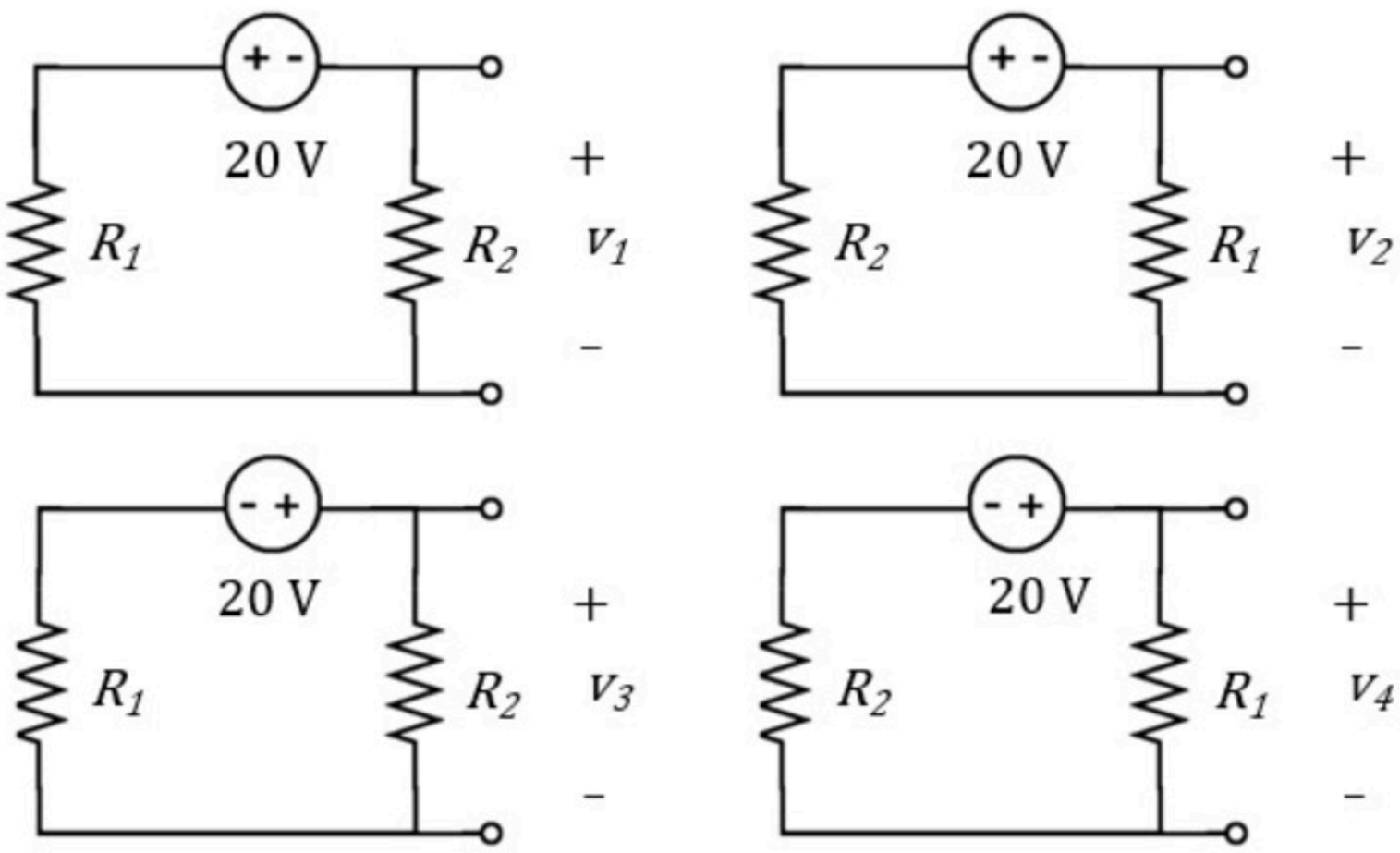

Given Variables:

R1 : 4 ohm

R2 : 6 ohm

Calculate the following:

v1 (V) :

v2 (V) :

v3 (V) :

v4 (V) :

Hint: Voltage divider and mind the signs.

Determine the voltages v_1, v_2, v_3 and v_4

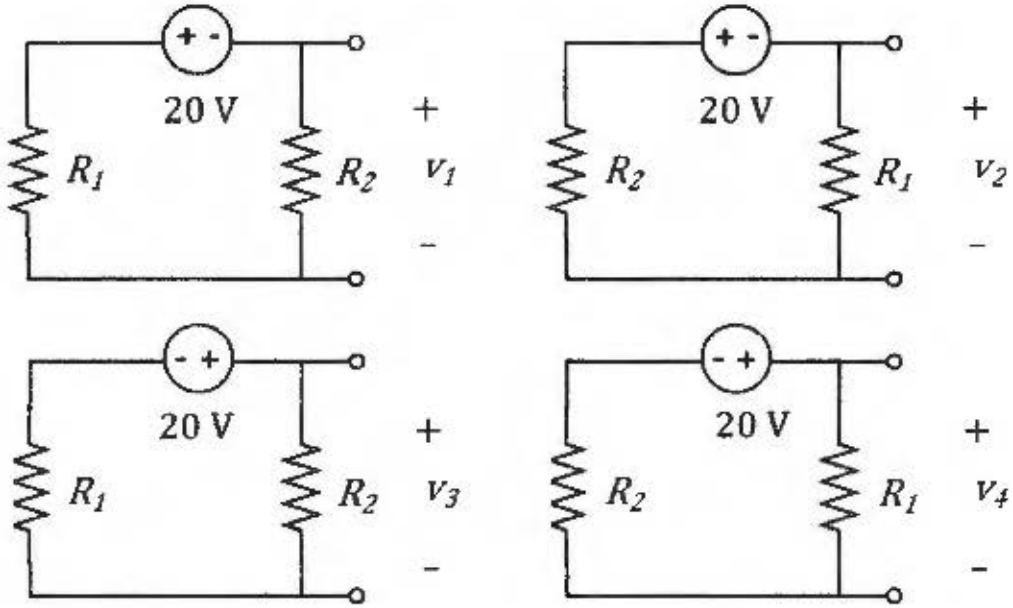

R1 = 4 Ω

R2 = 6 Ω

(a) VOLTAGE DIVIDER

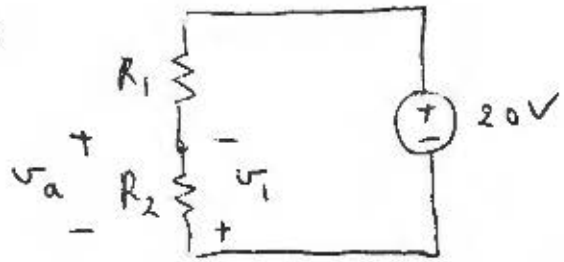

$$v_a = 20 \cdot \frac{R_2}{R_1 + R_2} = 20 \, \frac{6}{10} = 12 \text{ V}$$

$v_1 = -v_a$

$$\boxed{v_1 = -12 \text{ V}}$$

(b) SAME IDEA: $v_2 = -20 \cdot \frac{R_1}{R_1 + R_2} = -20 \cdot \frac{4}{10} = -8$

$$\boxed{v_2 = -8 \text{ V}}$$

(c)

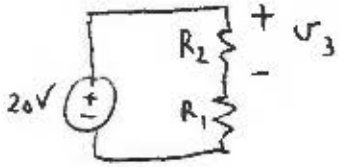

$$v_3 = 20 \cdot \frac{R_2}{R_1 + R_2} = 20 \cdot \frac{6}{10} = 12$$

$$\boxed{v_3 = 12 \text{ V}}$$

(d) $v_4 = 20 \cdot \frac{R_1}{R_1 + R_2} = 20 \, \frac{4}{10} = 8$ $\boxed{v_4 = 8 \text{ V}}$

PP - Basic analysis 004

Unlimited Attempts.

What is the reading X from the ammeter?

What would be the reading Y if I replaced the ammeter by a volt-meter?

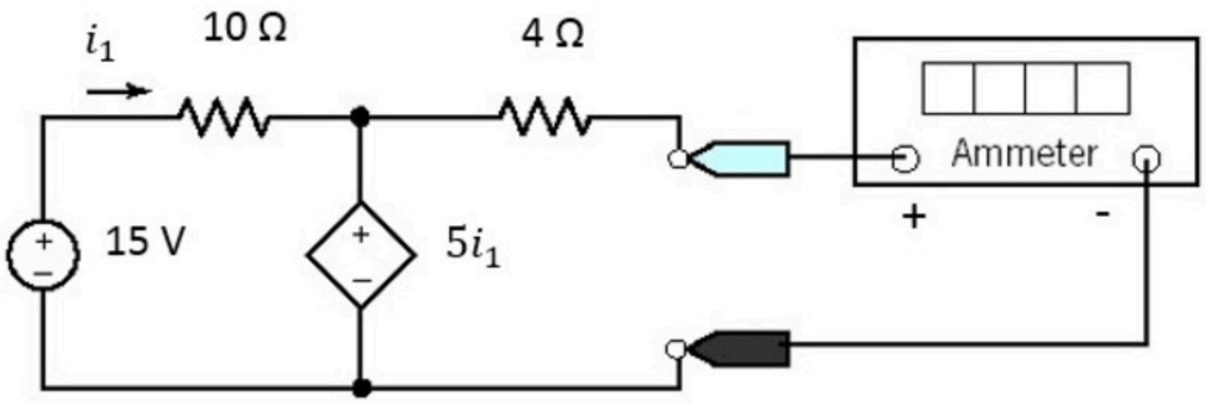

Given Variables:

. : . .

Calculate the following:

X (A) :

1.25 ✓

Y (V) :

5 ✓

Hint: Ammeters and volt meters behave as short and open circuits respectively

Basic analysis 005

Problem has been graded.

Find the power supplied by the dependent source.

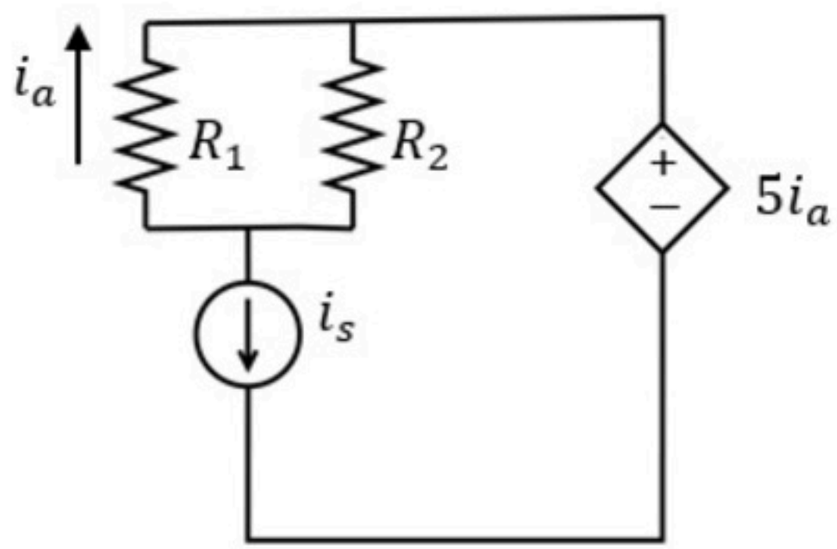

Given Variables:

R1 : 5 ohm

R2 : 20 ohm

is : 5 A

Calculate the following:

P (W) :

Hint: Use current divider

Find the power supplied by the dependent source.

R1 = 14 Ω

R2 = 7 Ω

is = 3 A

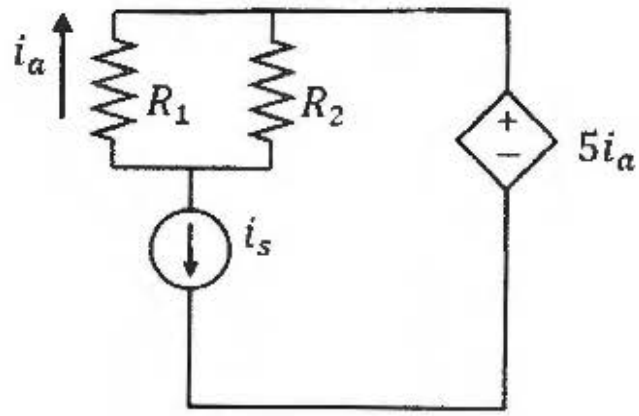

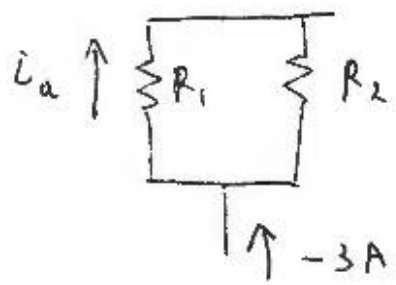

CURRENT DIVIDER

$$i_a = (-3)\cdot\frac{R_2}{R_1+R_2} = -3\cdot\frac{7}{21} = -1A$$

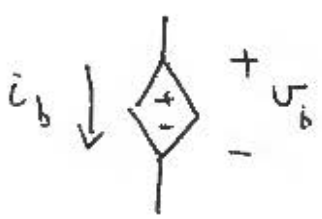

$$v_b = 5i_a = -5V$$

$$i_b = -i_s = -3A$$

$$P = v_b\, i_b = 15W$$

RECEIVED (PASSIVE SIGN CONVENTION)

$$\boxed{P = -15W}$$ SUPPLIED

PP - Basic analysis 005

Problem has been graded.

Someone did measurements on this circuit and found that
i_1 = 1 A, v_2 = -20 V, i_3 = -2 A and v_4 = -30 V.

Find the values of R1, R2, R3 and R4.

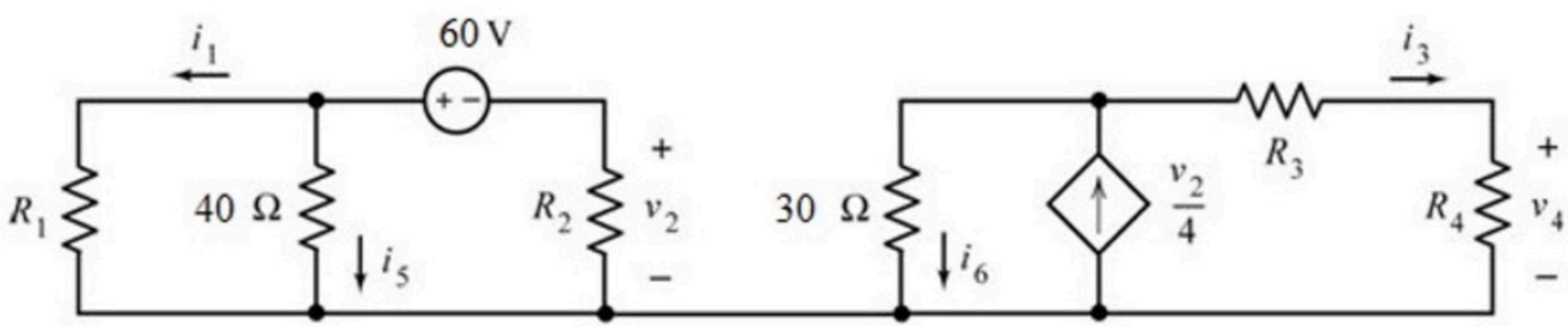

Given Variables:

. : . .

Calculate the following:

R1 (ohm) :

40 ✓

R2 (ohm) :

10 ✓

R3 (ohm) :

30 ✓

R4 (ohm) :

15 ✓

Hint: Use KVL and KCL

Basic analysis 006

Problem has been graded.

Determine the currents i_1, i_2, i_3 and i_4

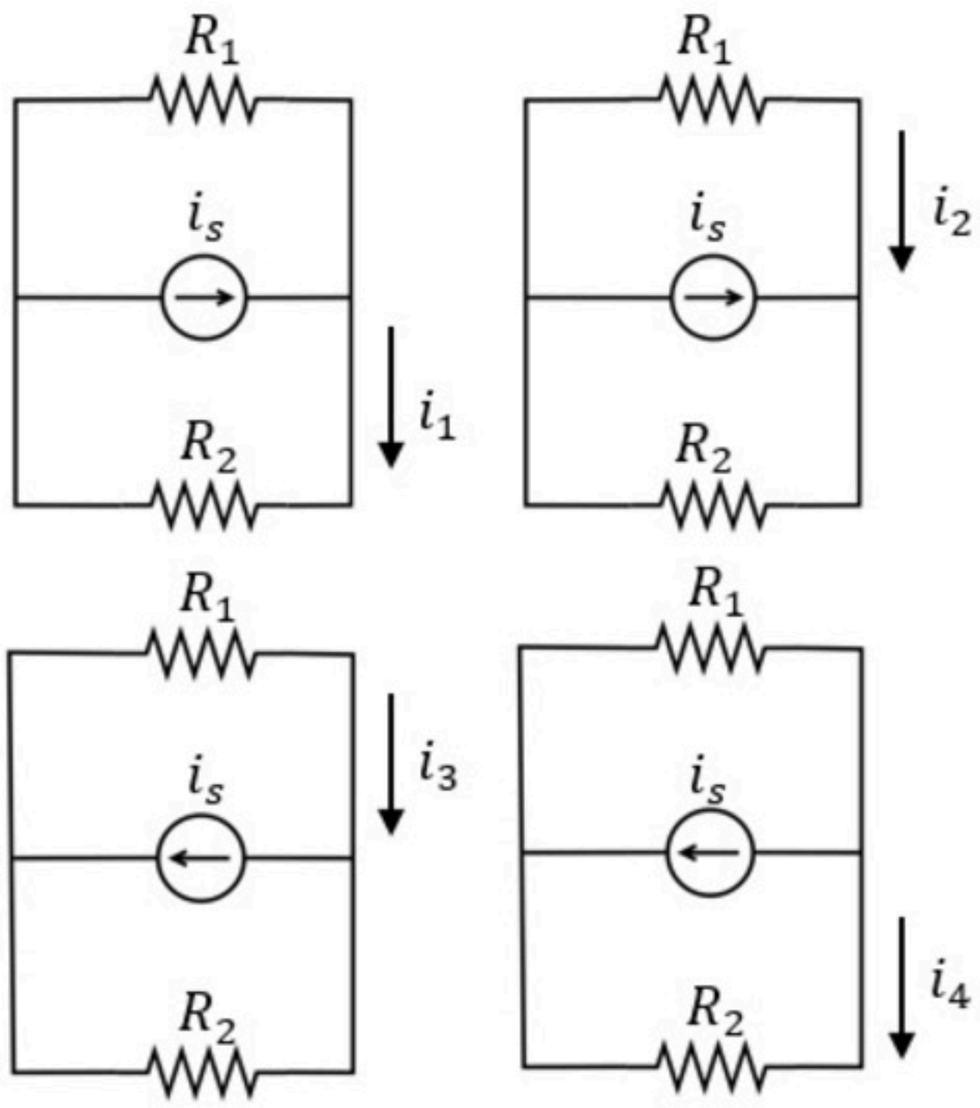

Given Variables:

R1 : 25 ohm

R2 : 50 ohm

is : 21 A

Calculate the following:

i1 (A) :

i2 (A) :

i3 (A) :

i4 (A) :

Hint: Use current divider

Determine the currents i_1, i_2, i_3 and i_4

R1 = 30 Ω

R2 = 10 Ω

is = 18 A

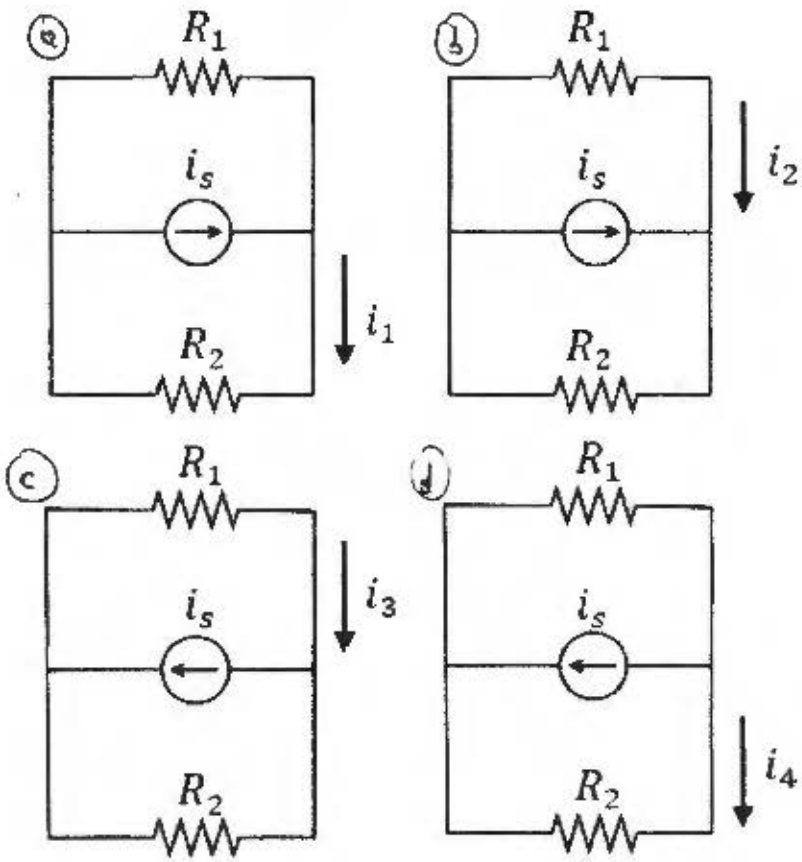

(a) CURRENT DIVIDER: $i_1 = i_s \cdot \frac{R_1}{R_1+R_2} = 18 \cdot \frac{30}{40} = 13.5\ A$

$\boxed{i_1 = 13.5\ A}$

(b) $-i_2 = i_s \cdot \frac{R_2}{R_1+R_2} = 18 \cdot \frac{10}{40} = 4.5\ A \Rightarrow \boxed{i_2 = -4.5\ A}$

(c) $i_3 = i_s \frac{R_2}{R_1+R_2} = 18 \cdot \frac{10}{40}$ $\boxed{i_3 = 4.5\ A}$

(d) $-i_4 = i_s \cdot \frac{R_1}{R_1+R_2} = 18 \cdot \frac{30}{40}$ $\boxed{i_4 = -13.5\ A}$

PP - Basic analysis 006

Problem has been graded.

Find the values of the missing voltages.

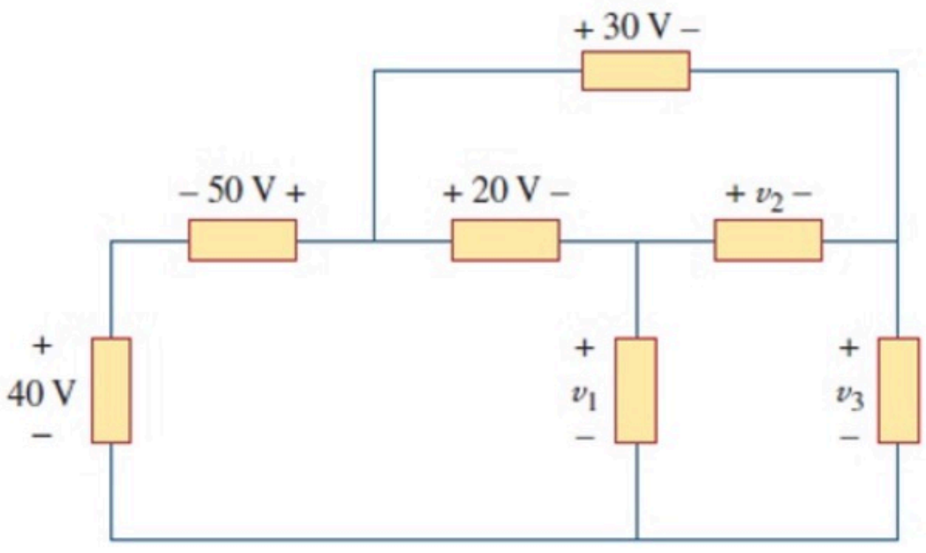

Given Variables:

. : . .

Calculate the following:

v1 (V) :

70 ✓

v2 (V) :

10 ✓

v3 (V) :

60 ✓

Hint: Use KVL

PP - Basic analysis 007

Problem has been graded.

Calculate the voltage V_o.

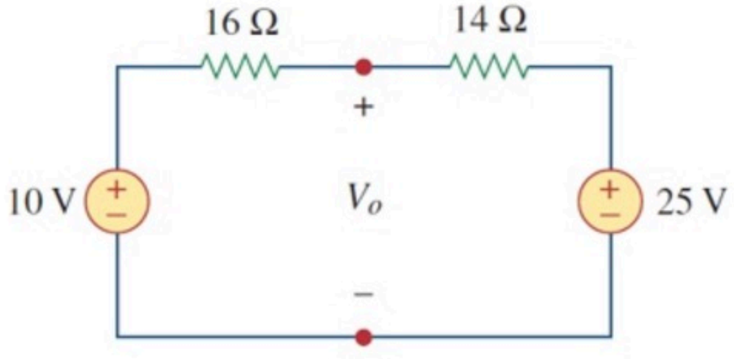

Given Variables:

. : . .

Calculate the following:

Vo (V) :

18

Hint: Use KVL or combine the sources

Basic analysis 008

Problem has been graded.

Find the volt meter reading X.

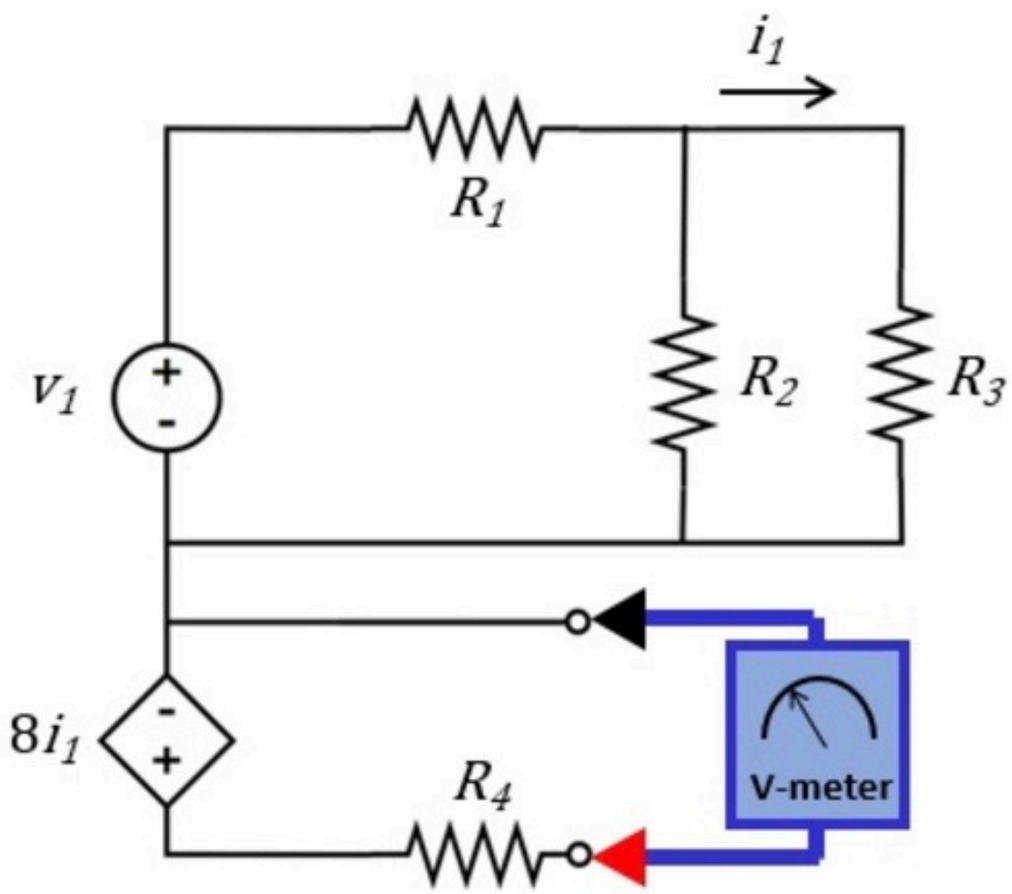

Given Variables:

v1 : 20 V

R1 : 10 ohm

R2 : 15 ohm

R3 : 10 ohm

R4 : 20 ohm

Calculate the following:

X (V) :

Hint: Mind the direction of the V meter

Find the volt meter reading X.

v1 = 10 V

R1 = 10 Ω

R2 = 15 Ω

R3 = 10 Ω

R4 = 10 Ω

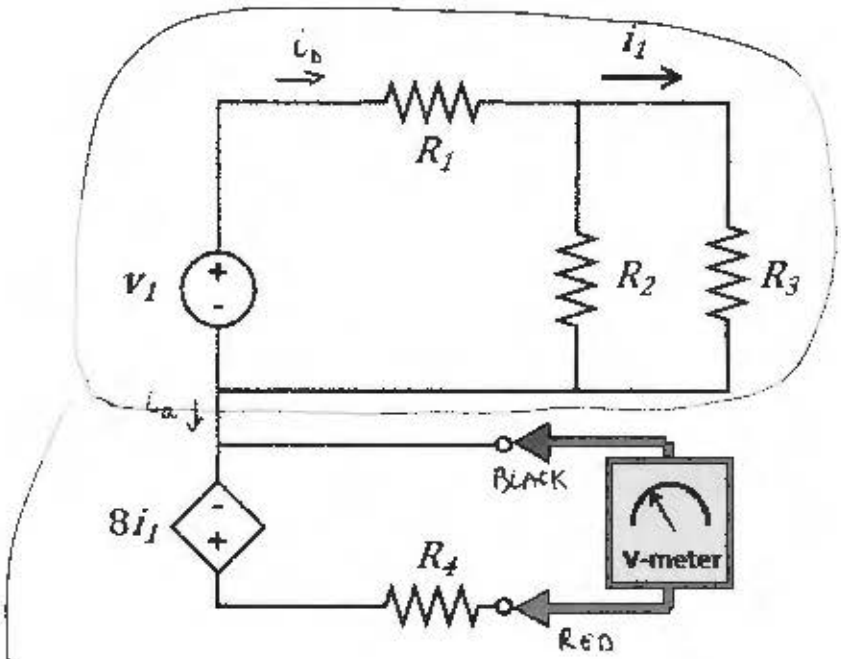

GENERALIZED KCL : $i_a = 0$

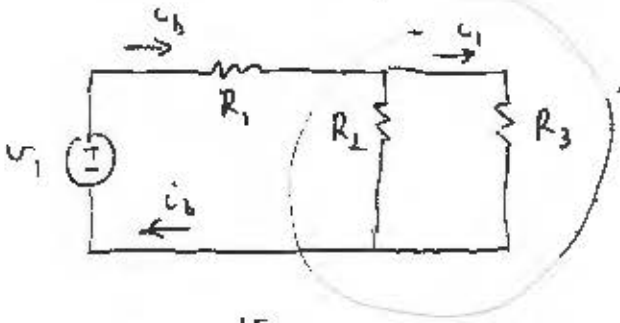

$$R_2 // R_3 = \left(\frac{1}{15} + \frac{1}{10}\right)^{-1} = \left(\frac{1}{5}\cdot\left(\frac{1}{3}+\frac{1}{2}\right)\right)^{-1} = \left(\frac{1}{5}\cdot\frac{5}{6}\right)^{-1} = 6\ \Omega$$

$$i_b = \frac{v_1}{R_1 + R_2 // R_3} = \frac{10}{10+6} = \frac{10}{16}$$

CURRENT DIVIDER. $i_1 = i_b \dfrac{R_2}{R_2+R_3} = \dfrac{\cancel{10}^{\,\cancel{2}}}{\cancel{16}_{\,8}} \cdot \dfrac{\cancel{15}^{\,3}}{\cancel{25}_{\,\cancel{5}}} = \dfrac{3}{8}$

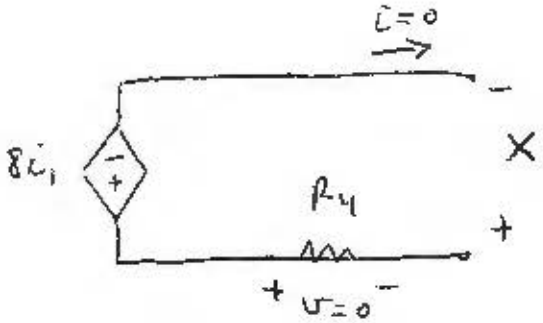

$\Rightarrow X = 8i_1 = 8 \cdot \frac{3}{8}$

$\boxed{X = 3V}$

PP - Basic analysis 008

Problem has been graded.

Calculate the voltage V_x.

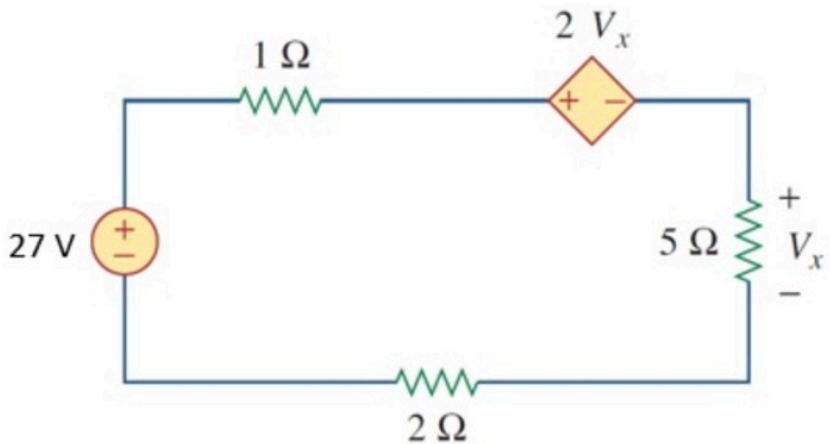

Given Variables:

. : . .

Calculate the following:

Vx (V) :

7.5 ✓

Hint: Use KVL

PP - Basic analysis 009

Problem has been graded.

Find the power P supplied by the dependent source.

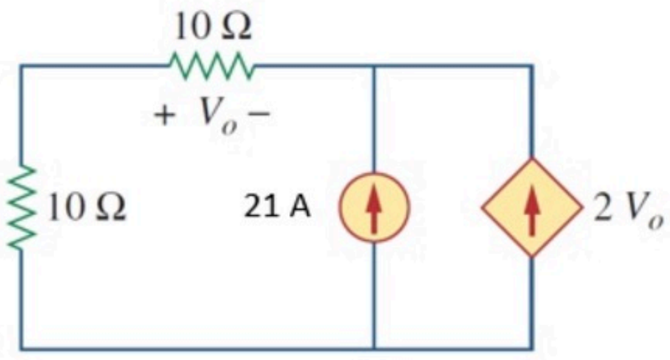

Given Variables:

. : . .

Calculate the following:

P (W) :

-400 ✓

Hint: Use KCL to find the current through the resistors

PP - Basic analysis 010

Problem has been graded.

Find R_{eq} looking into the terminals.

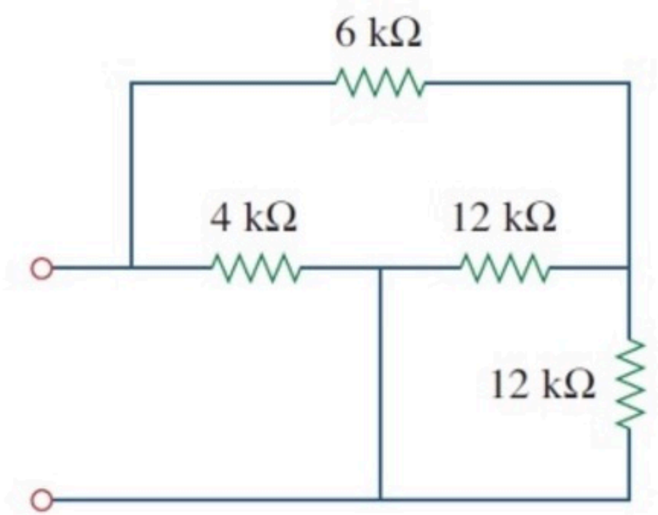

Given Variables:

. : . .

Calculate the following:

Req (ohm) :

3000 ✓

Hint: Check units

PP - Basic analysis 011

Unlimited Attempts.

Find R_{eq} looking into the terminals.

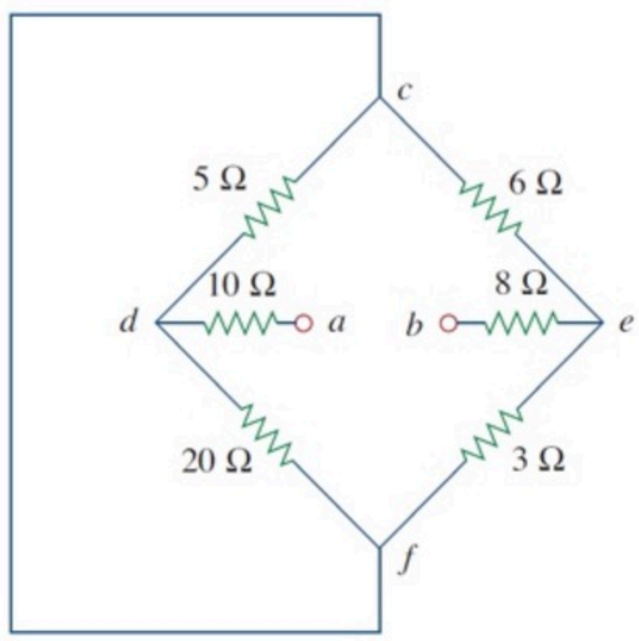

Given Variables:

. : . .

Calculate the following:

Req (ohm) :

24

Hint: Use series and parallel connections of resistors

PP - Basic analysis 012

Problem has been graded.

Calculate R_{eq} (does not include the 2.5 Ω resistor) and the currents i_o, i_1, i_2 and i_3.

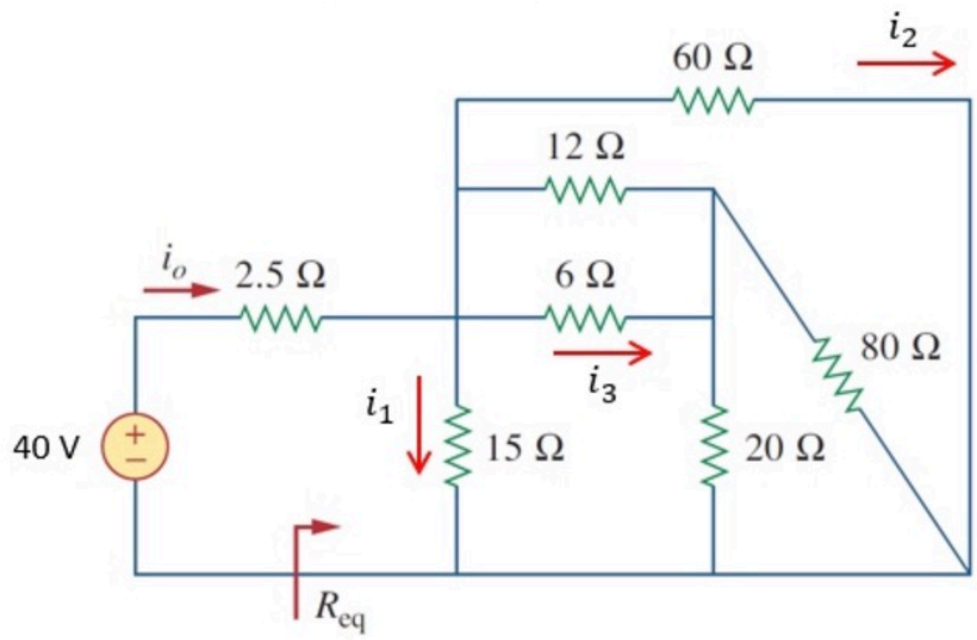

Given Variables:

. : . .

Calculate the following:

Req (ohm) :

7.5 ✓

i0 (A) :

4 ✓

i1 (A) :

2 ✓

i2 (A) :

0.5 ✓

i3 (A) :

1 ✓

Hint: Use series and parallel connections of resistors

Nodal Mesh 001

Problem has been graded.

Find the node voltages v_a and v_b.
Use nodal analysis.

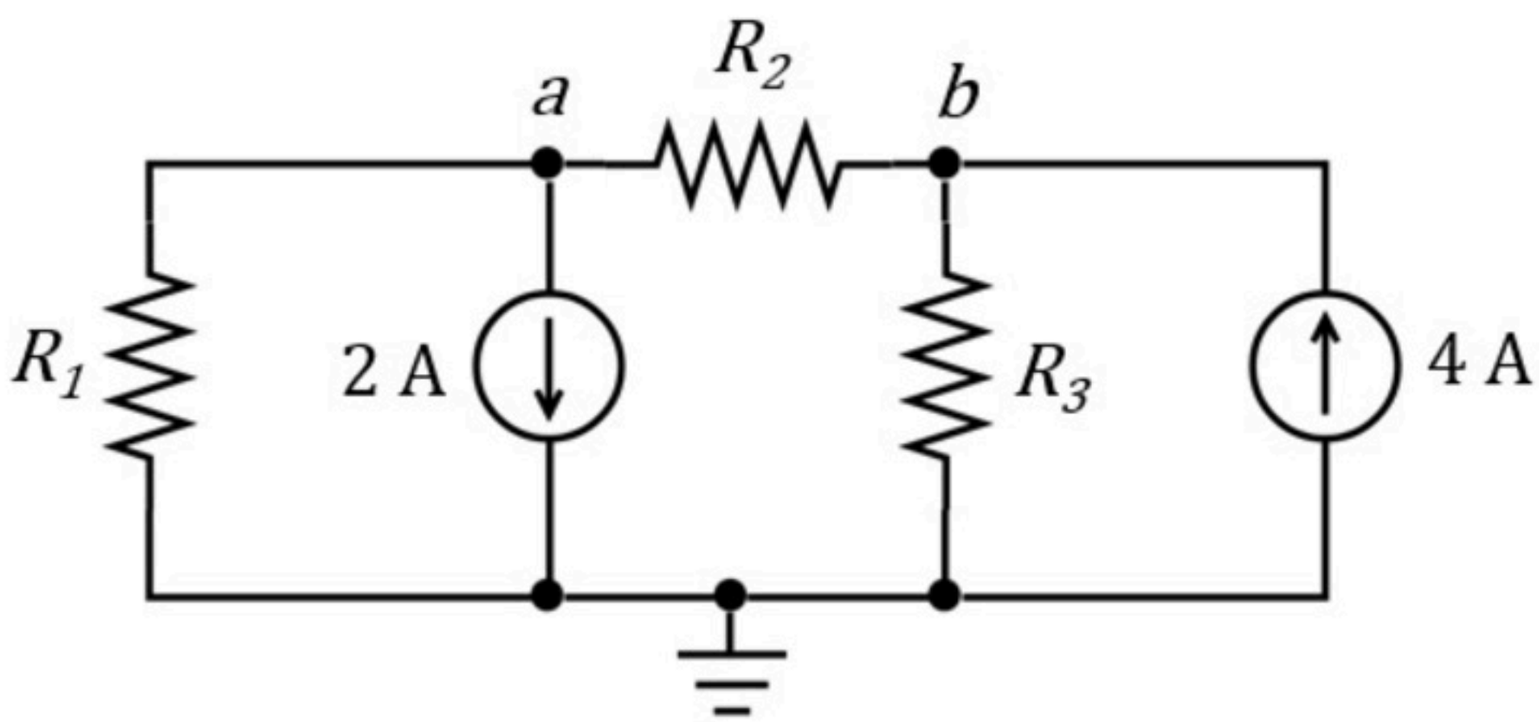

Given Variables:

R1 : 3 ohm

R2 : 6 ohm

R3 : 1 ohm

Calculate the following:

va (V) :

vb (V) :

Find the node voltages v_a and v_b.
Use nodal analysis.

R1 = 2 Ω

R2 = 1 Ω

R3 = 1 Ω

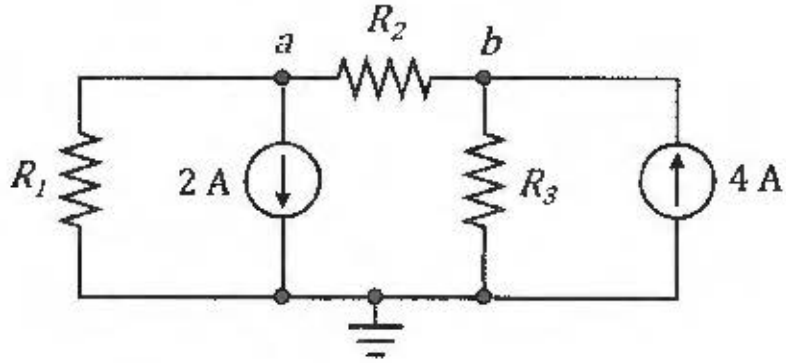

⊛ KCL @ a : $\frac{v_a}{2} + \frac{v_a - v_b}{1} + 2 = 0 \Rightarrow 3v_a - 2v_b = -4$ (1)

⊛ KCL @ b. $\frac{v_b - v_a}{1} + \frac{v_b}{1} - 4 = 0 \Rightarrow -v_a + 2v_b = 4$ (2)

⊛ (1) + (2) : $2v_a = 0 \Rightarrow \boxed{v_a = 0\,V}$

$\boxed{v_b = 2\,V}$

CHECK KCL

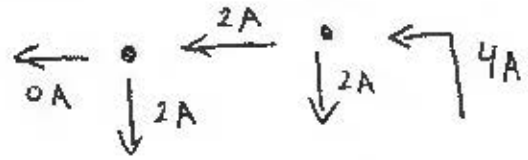

Nodal Mesh 002

Problem has been graded.

Find the node voltages v_1, v_2 and v_3.
Use nodal analysis.

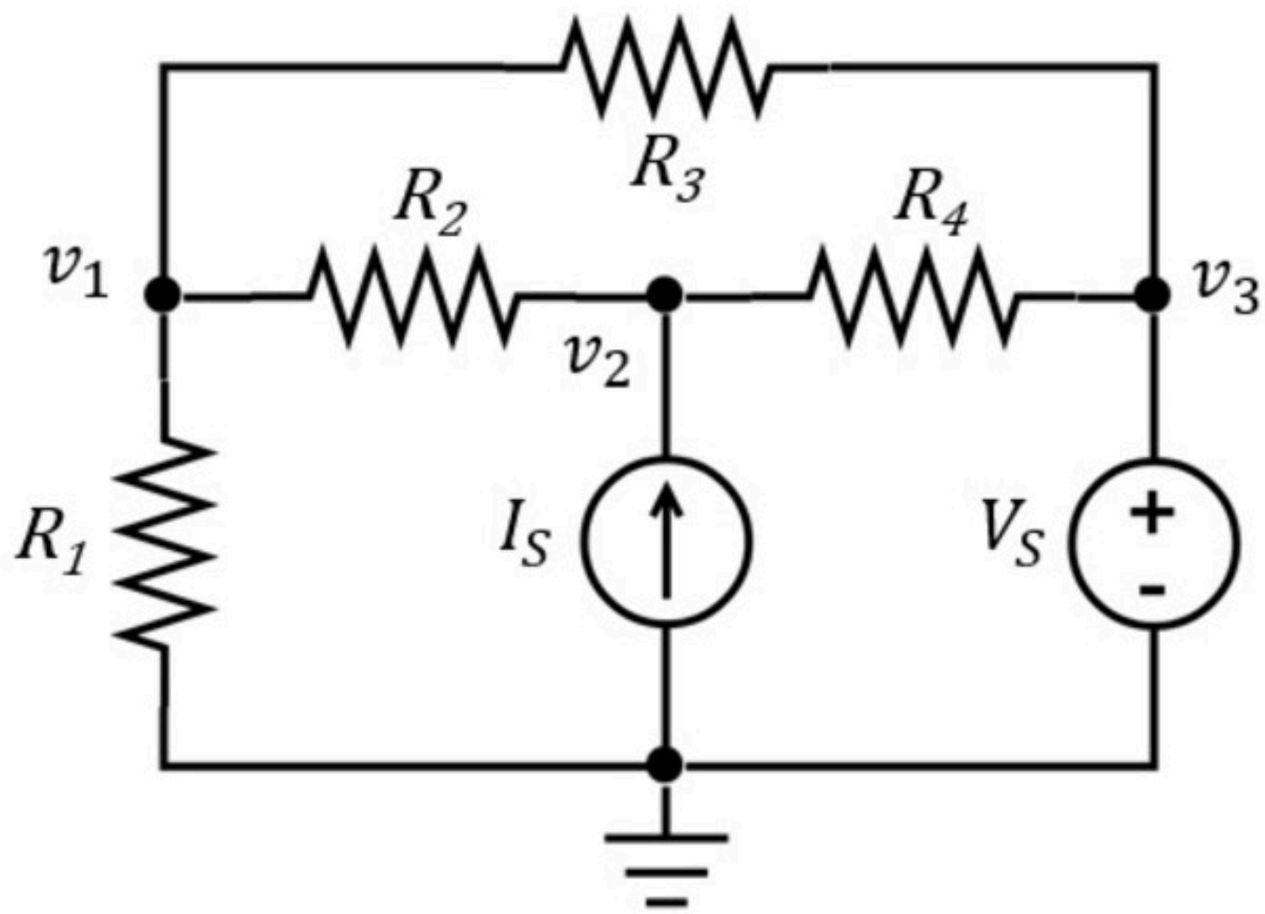

Given Variables:

R1 : 2 ohm

R2 : 1 ohm

R3 : 1 ohm

R4 : 2 ohm

Vs : 5 V

Is : 1 A

Calculate the following:

v1 (V) :

v2 (V) :

v3 (V) :

Find the node voltages v_1, v_2 and v_3.
Use nodal analysis.

R1 = 2 Ω

R2 = 1 Ω

R3 = 1 Ω

R4 = 2 Ω

Vs = 5 V

Is = 1 A

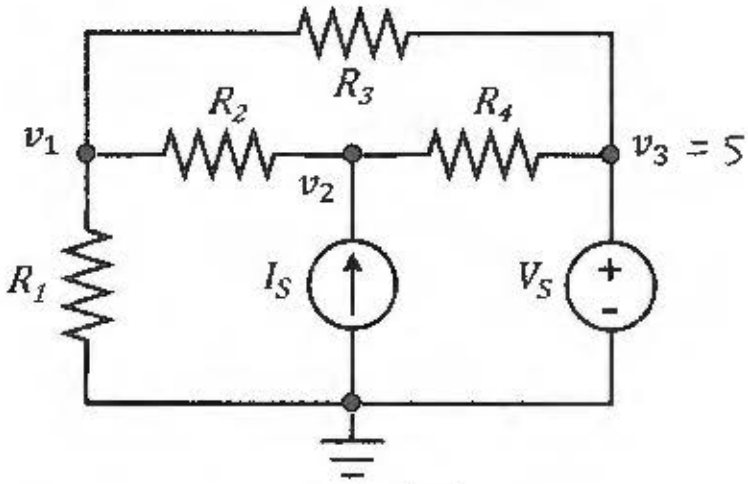

$v_3 = V_S \Rightarrow \boxed{v_3 = 5V}$

⊗ KCL @ 1 : $\frac{v_1}{2} + \frac{v_1 - 5}{1} + \frac{v_1 - v_2}{1} = 0 \Rightarrow 5v_1 - 2v_2 = 10$ (1)

⊗ KCL @ 2 : $\frac{v_2 - v_1}{1} + \frac{v_2 - 5}{2} - 1 = 0 \Rightarrow -2v_1 + 3v_2 = 7$ (2)

⊗ $3 \times (1) + 2 \times (2)$: $11 v_1 = 44 \Rightarrow \boxed{v_1 = 4V}$

$\boxed{v_2 = 5V}$

CHECK KCL

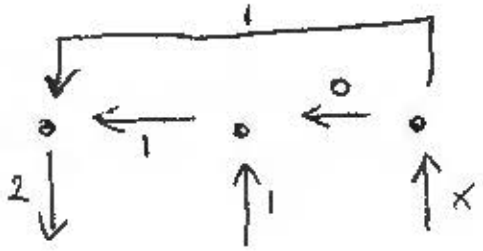

$x = 1$

Nodal Mesh 003

Problem has been graded.

Find the voltage v_a . Use nodal analysis.

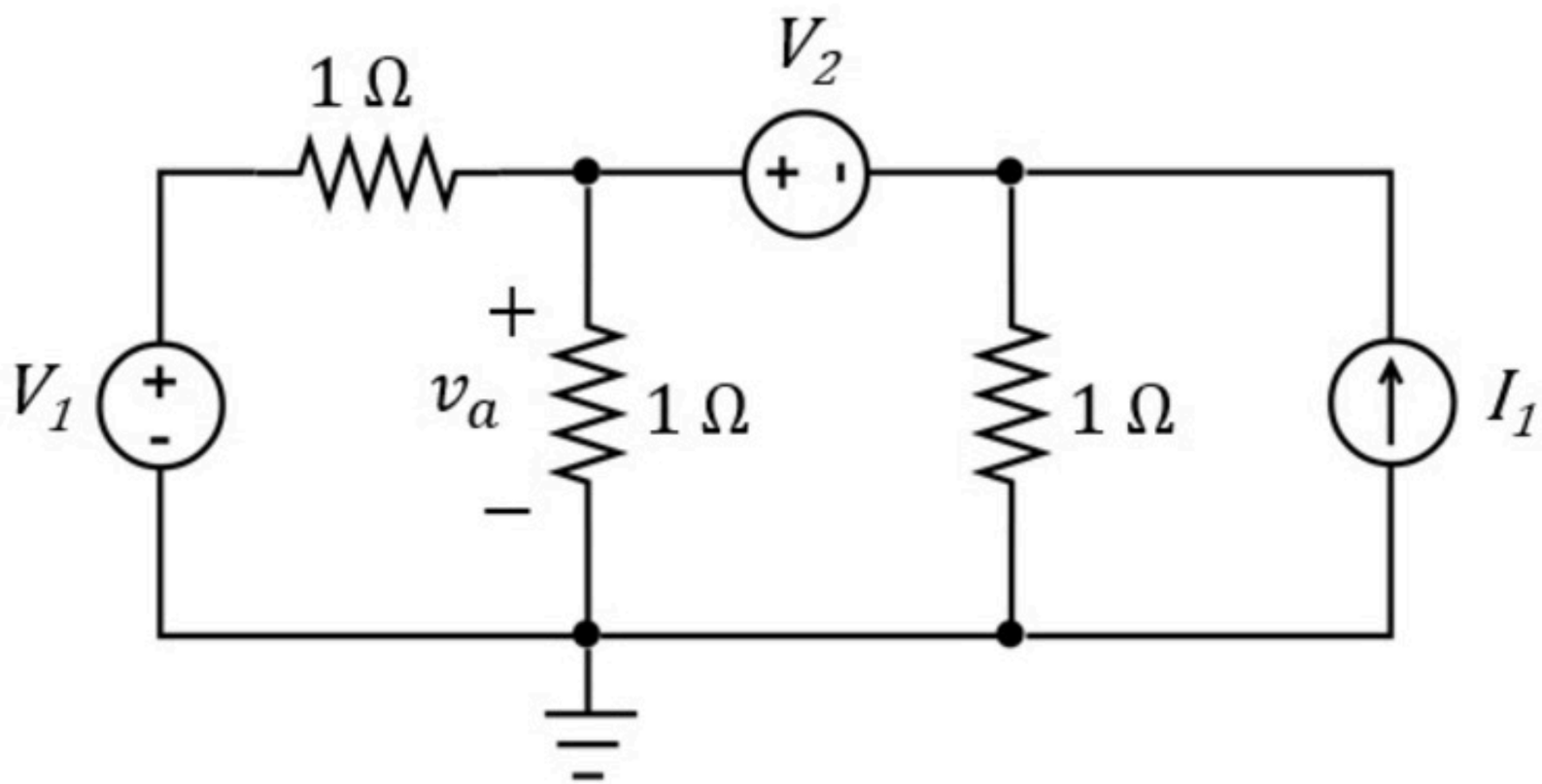

Given Variables:

V1 : 6 V

V2 : 10 V

I1 : 5 A

Calculate the following:

va (V) :

Find the voltage v_a . Use nodal analysis.

V1 = 6 V

V2 = 10 V

I1 = 5 A

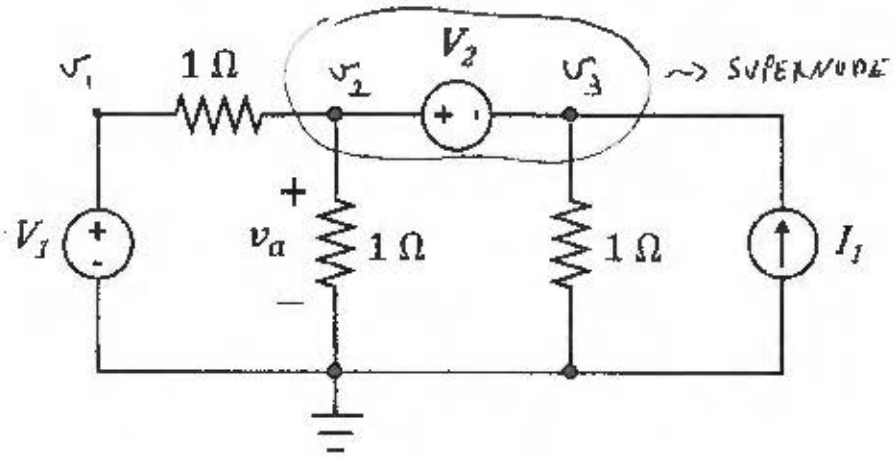

$v_1 = V_1 = 6V$

⊗ KCL @ SN : $\frac{v_2 - 6}{1} + \frac{v_2}{1} + \frac{v_3}{1} - 5 = 0$

$\Rightarrow \quad 2v_2 + v_3 = 11 \qquad (1)$

⊗ SN : $\quad v_2 = v_3 + 10 \qquad (2)$

⊗ (2) in (1) : $\quad 2v_3 + 20 + v_3 = 11 \quad \Rightarrow \quad 3v_3 = -9 \quad \Rightarrow \quad v_3 = -3V$

$v_2 = 7V$

$v_a = v_2 \quad \Rightarrow \quad \boxed{v_a = 7V}$

<u>CHECK</u> KCL AND $v_2 - v_3 = 10V$

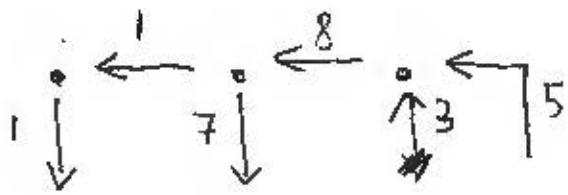

Find the node voltages v_1, v_2 and v_3.
Use nodal analysis.

Vs = 9 V

R1 = 5 Ω

R2 = 5 Ω

b = 3 A/A

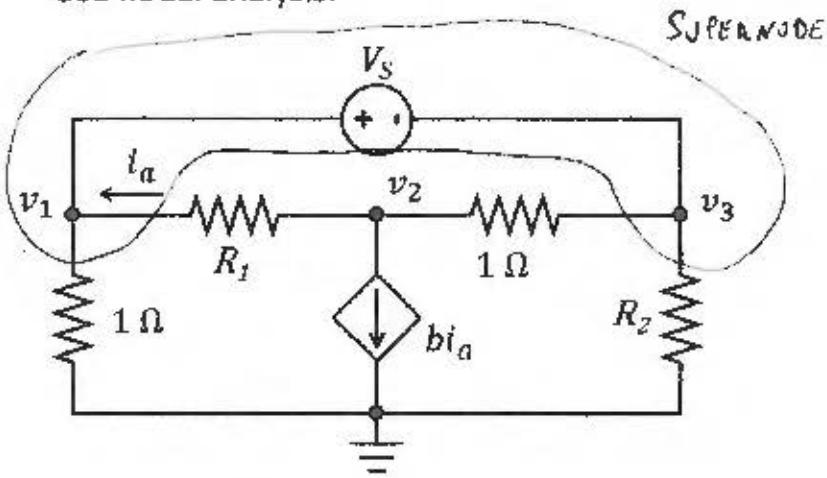

OPTION 1

⊛ KCL @ SN: $\frac{v_1}{1} + \frac{v_1 - v_2}{5} + \frac{v_3 - v_2}{1} + \frac{v_3}{5} = 0 \Rightarrow 6v_1 - 6v_2 + 6v_3 = 0$

$\Rightarrow v_1 - v_2 + v_3 = 0 \quad (1)$

⊛ KCL @ 2: $\frac{v_2 - v_1}{5} + \frac{v_2 - v_3}{1} + 3\left(\frac{v_2 - v_1}{5}\right) = 0 \Rightarrow -4v_1 + 9v_2 - 5v_3 = 0 \quad (2)$

⊛ SN: $v_1 = v_3 + 9 \quad (3)$

(3) IN (1): $v_3 + 9 - v_2 + v_3 = 0 \Rightarrow -v_2 + 2v_3 = -9 \quad (4)$

(3) IN (2): $-4v_3 - 36 + 9v_2 - 5v_3 = 0 \Rightarrow 9v_2 - 9v_3 = 36$

$\Rightarrow v_2 - v_3 = 4 \quad (5)$

(4) + (5): $2v_3 - v_3 = -9 + 4 \Rightarrow \boxed{v_3 = -5V}$

$\boxed{v_1 = 4V}$ FROM (3)

$\boxed{v_2 = -1V}$ FROM (5)

CHECK KCL

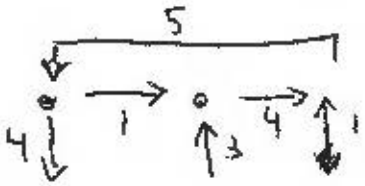

AND $v_1 = v_3 + 9$

Nodal Mesh 004

Problem has been graded.

Find the node voltages v_1, v_2 and v_3.
Use nodal analysis.

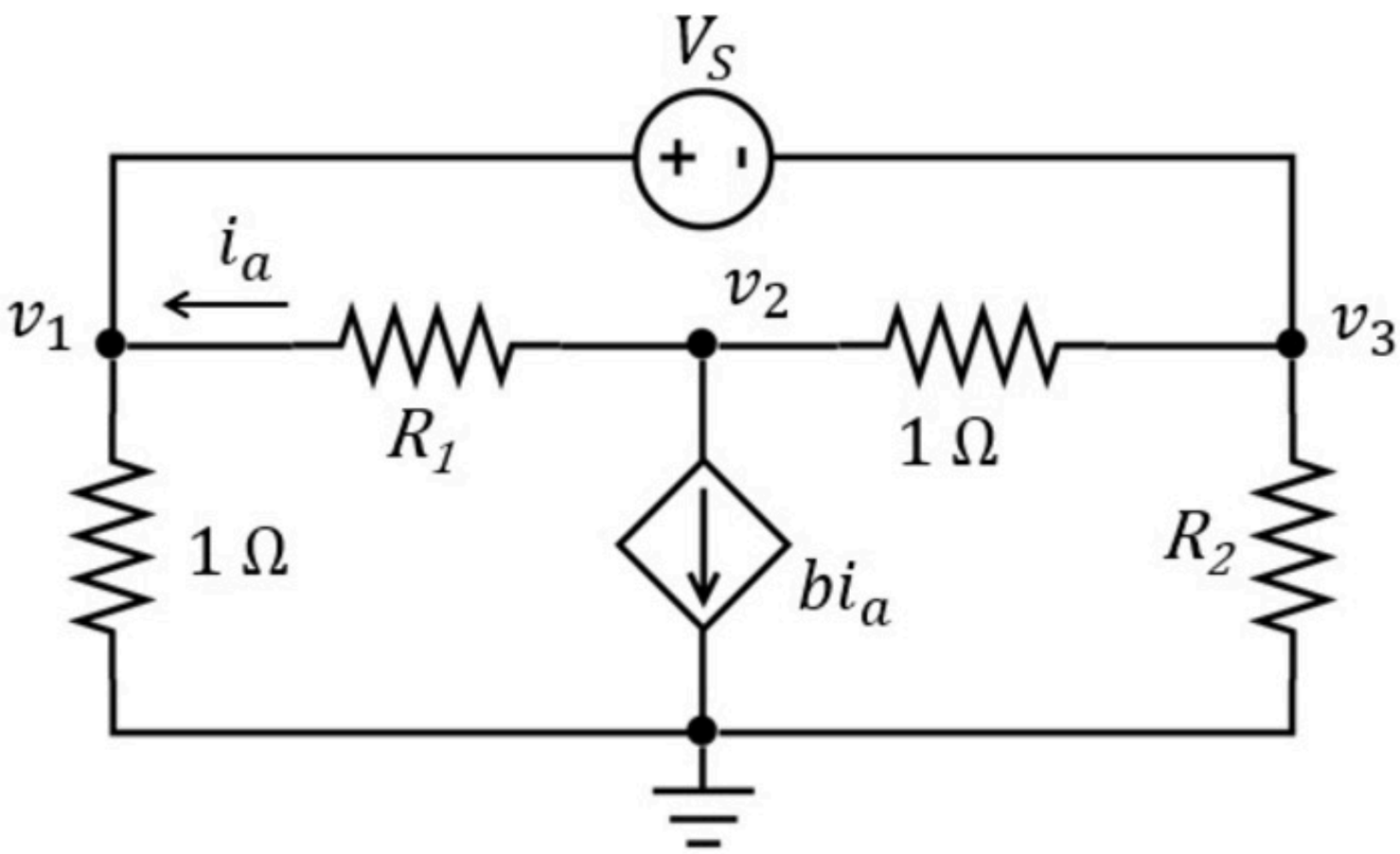

Given Variables:

Vs : 9 V

R1 : 5 ohm

R2 : 5 ohm

b : 3 A/A

Calculate the following:

v1 (V) :

v2 (V) :

v3 (V) :

Nodal Mesh 005

Problem has been graded.

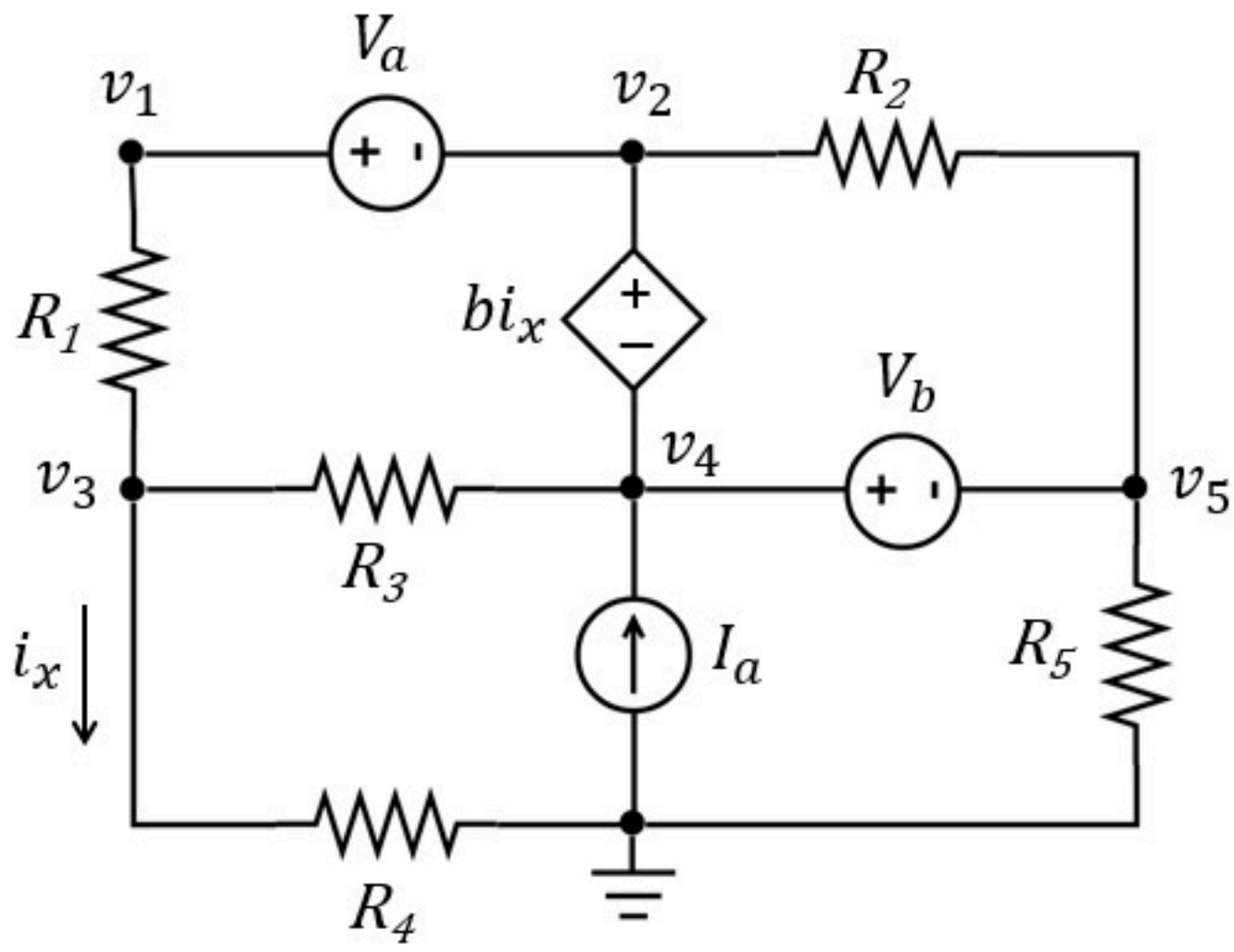

Given Variables:

R1 : 1 ohm
R2 : 2 ohm
R3 : 1 ohm
R4 : 2 ohm
R5 : 1 ohm
Va : 1 V
Vb : 1 V
Ia : 4 A
b : 1.5 V/A

Calculate the following:

v1 (V) :

v2 (V) :

v3 (V) :

v4 (V) :

v5 (V) :

Hint: Use a supernode and move GND (and move it back).

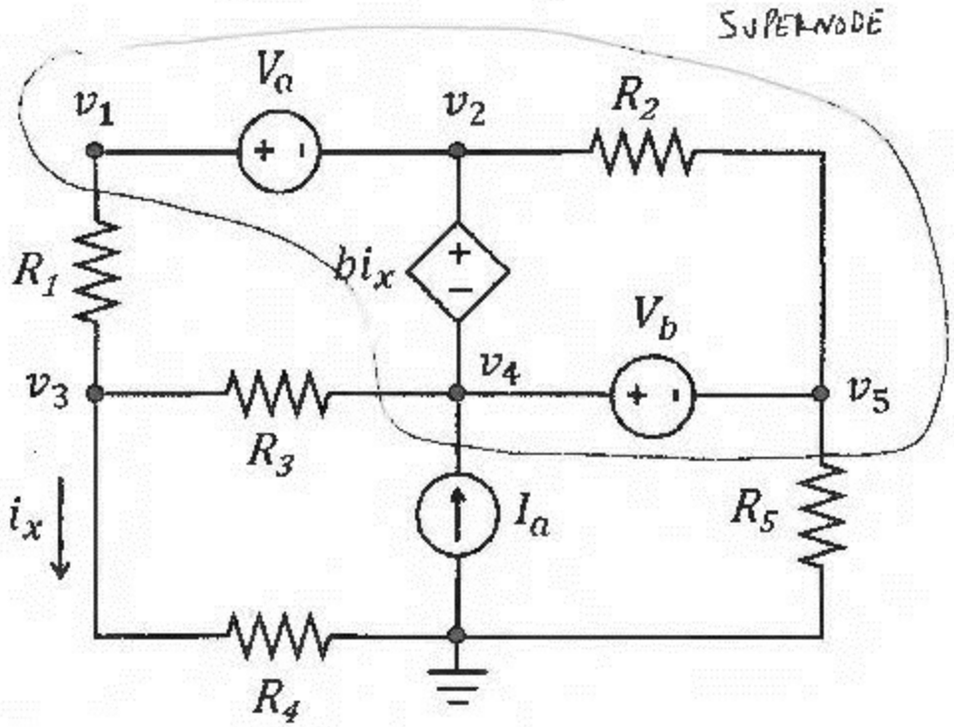

R1 = 1 Ω

R2 = 3 Ω

R3 = 1 Ω

R4 = 4 Ω

R5 = 1 Ω

Va = -2 V

Vb = 2 V

Ia = 3 A

b = 1 V/A

⊛ KCL @ 3 : $\frac{v_3 - v_1}{1} + \frac{v_3 - v_4}{1} + \frac{v_3}{3} = 0 \Rightarrow -3v_1 + 7v_3 - 3v_4 = 0$ (1)

⊛ KCL @ SN : $\frac{v_1 - v_3}{1} + \frac{v_4 - v_3}{1} + \frac{v_5}{1} - 3 = 0 \Rightarrow v_1 - 2v_3 + v_4 + v_5 = 3$ (2)

⊛ SN V_a : $v_1 = v_2 - 2 \Rightarrow v_1 = v_2 - 2$ (3)

⊛ SN V_b : $v_4 = v_5 + 2 \Rightarrow v_5 = v_4 - 2$ (4)

⊛ SN bi_x : $v_2 = v_4 + 1 \cdot \frac{v_3}{3} \Rightarrow v_3 = 3v_2 - 3v_4$ (5)

(4),(3) IN (1) : $-3v_2 + 6 + 21v_2 - 21v_4 - 3v_4 = 0 \Rightarrow 18v_2 - 24v_4 = -6$

$\Rightarrow 3v_2 - 4v_4 = -1$ (6)

(3),(4),(5) IN (2): $v_2 - 2 - 6v_2 + 6v_4 + v_4 + v_4 - 2 = 3 \Rightarrow -5v_2 + 8v_4 = 7$ (7)

(6)×2 + (7) : $6v_2 - 5v_2 = -2 + 7 \Rightarrow \boxed{v_2 = 5V}$

$\boxed{v_1 = 3V}$ FROM (3)

$\boxed{v_4 = 4V}$ FROM (6)

$\boxed{v_5 = 2V}$ FROM (4)

$\boxed{v_3 = 3V}$ FROM (5)

CHECK KCL

Nodal Mesh 006

Problem has been graded.

Find the mesh currents i_1, i_2, and i_3.

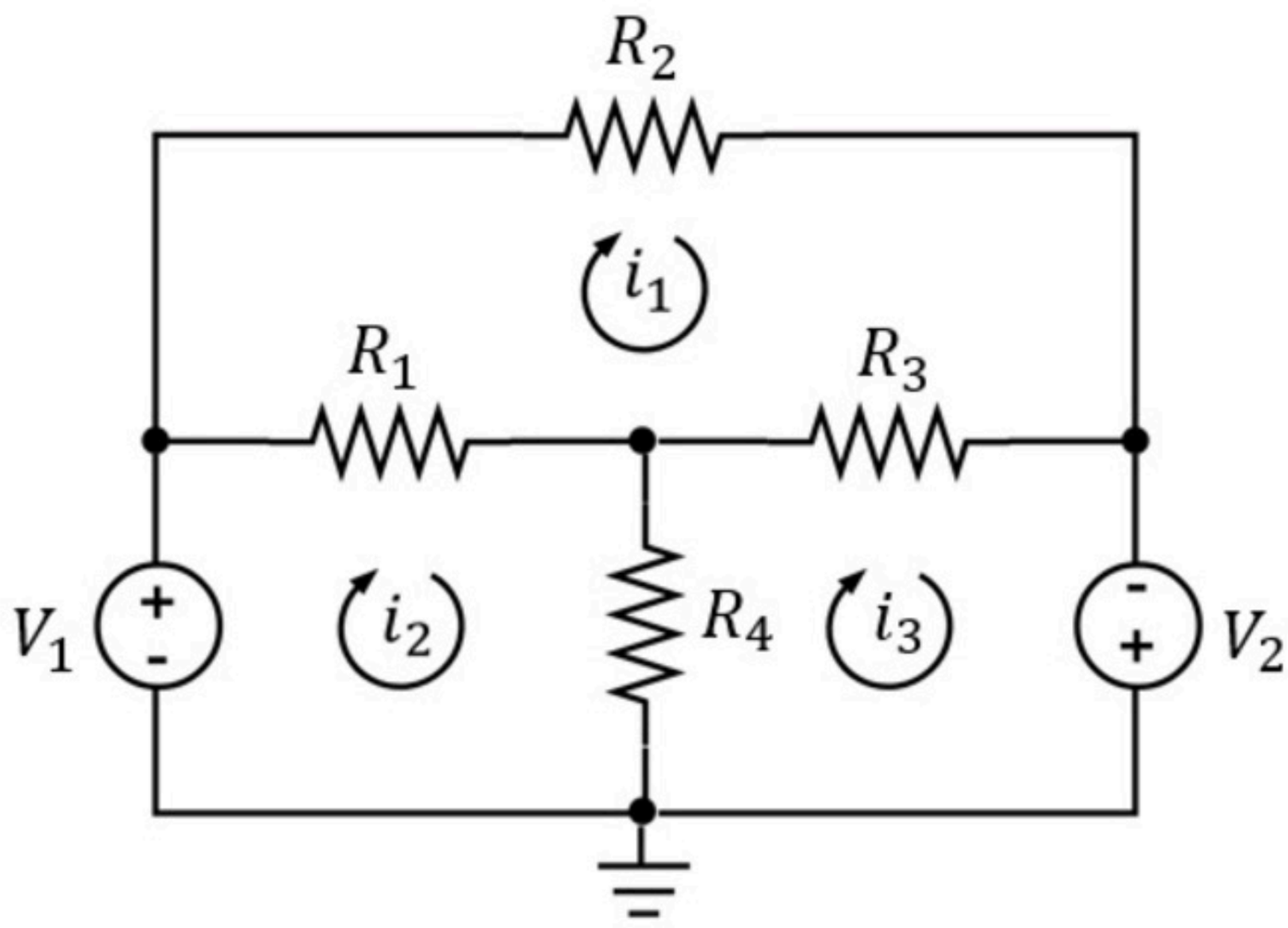

Given Variables:

R1 : 1 ohm

R2 : 1 ohm

R3 : 2 ohm

R4 : 1 ohm

V1 : 4 V

V2 : 3 V

Calculate the following:

i1 (A) :

i2 (A) :

i3 (A) :

Find the mesh currents i_1, i_2, and i_3.

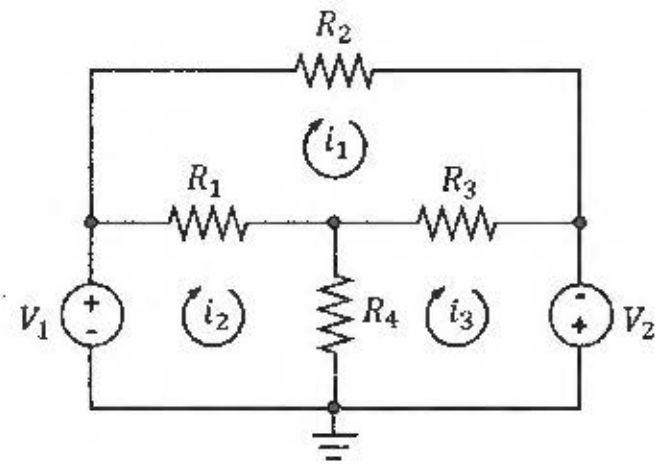

R1 = 1 Ω

R2 = 1 Ω

R3 = 2 Ω

R4 = 1 Ω

V1 = 4 V

V2 = 3V

MESH 1: $1 \cdot i_1 + 2(i_1 - i_3) + 1(i_1 - i_2) = 0 \Rightarrow 4i_1 - i_2 - 2i_3 = 0$ (1)

MESH 2: $-4 + 1(i_2 - i_1) + 1 \cdot (i_2 - i_3) = 0 \Rightarrow -i_1 + 2i_2 - i_3 = 4$ (2)

MESH 3: $1 \cdot (i_3 - i_2) + 2 \cdot (i_3 - i_1) - 3 = 0 \Rightarrow -2i_1 - i_2 + 3i_3 = 3$ (3)

(1). $i_2 = 4i_1 - 2i_3$

(1) IN (2): $-i_1 + 8i_1 - 4i_3 - i_3 = 4 \Rightarrow 7i_1 - 5i_3 = 4$ (4)

(1) IN (3). $-2i_2 - 4i_1 + 2i_3 + 3i_3 = 3 \Rightarrow -6i_1 + 5i_3 = 3$ (5)

(4) + (5). $\boxed{i_1 = 7A}$

$\boxed{i_3 = 9A}$ $\boxed{i_2 = 10\,A}$

CHECK KVL

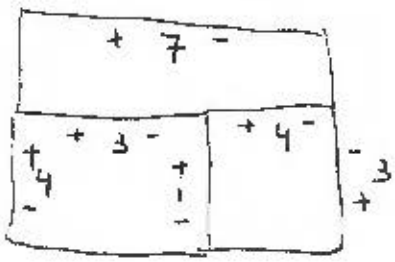

Nodal Mesh 007

Problem has been graded.

Given the ammeter reading X,
find the value of resistance R_4.

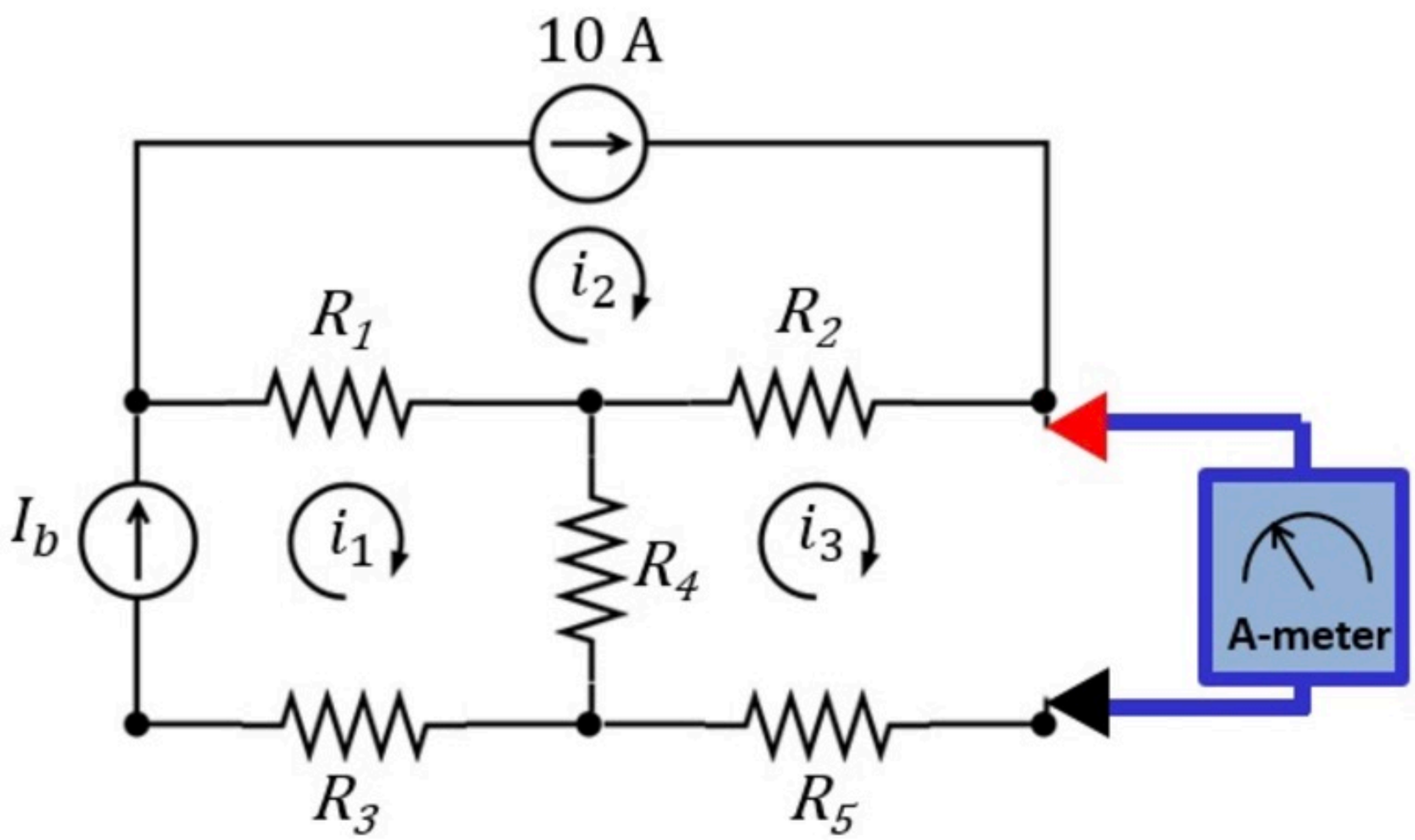

Given Variables:
R1 : 2 ohm
R2 : 3 ohm
R3 : 2 ohm
R5 : 5 ohm
X : 3 A
Ib : 1 A

Calculate the following:

R4 (ohm) :

Hint: Find the voltage over R4 using KVL in any loop

Given the ammeter reading X,
find the value of resistance R_4.

R1 = 19 Ω

R2 = 2 Ω

R3 = 3 Ω

R5 = 2 Ω

X = 3 A

Ib = 1 A

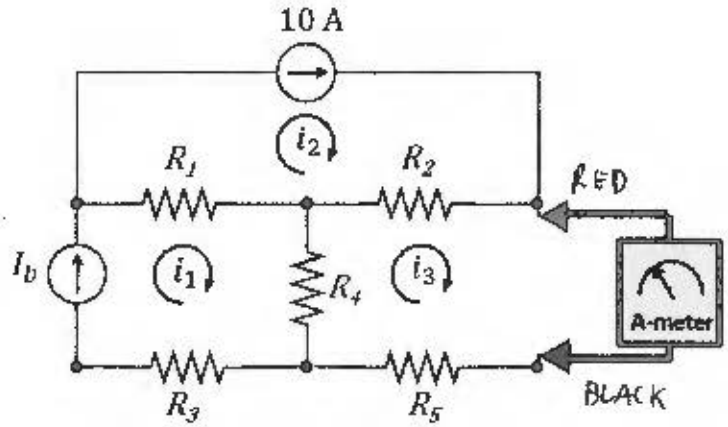

$i_3 = X = 3$

$i_1 = I_b = 1$

$i_2 = 10$

A-METER

KVL MESH 3. $R_4(i_3 - i_1) + R_2(i_3 - i_2) + 0 + R_5 i_3 = 0$

$R_4 \cdot 2 + 2 \cdot (-7) + 2 \cdot 3 = 0$

$\boxed{R_4 = 4\,\Omega}$

Nodal Mesh 008

Problem has been graded.

Given the ammeter reading X,
find the value of resistance R_3.

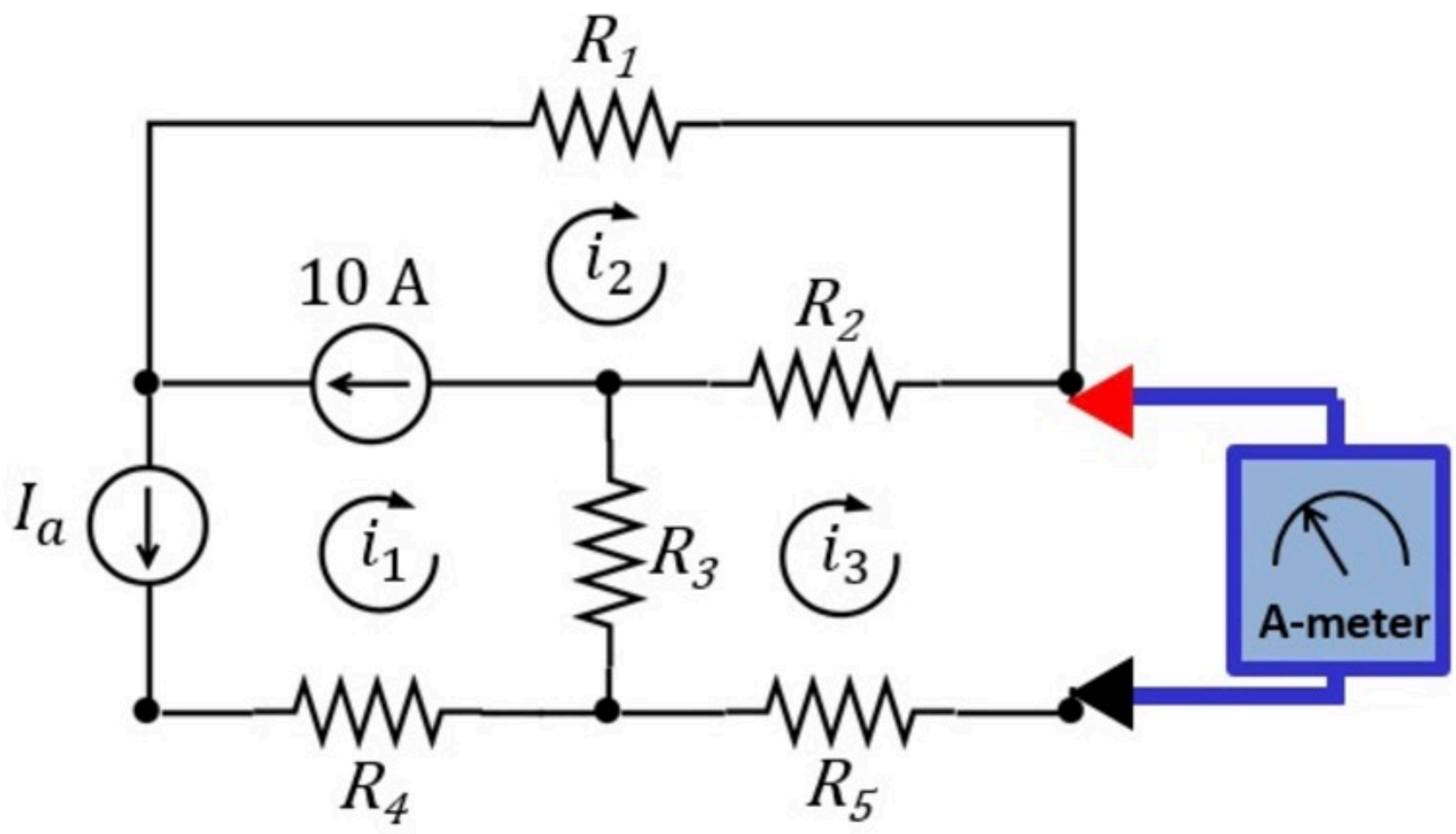

Given Variables:

R1 : 2 ohm

R2 : 2 ohm

R4 : 2 ohm

R5 : 2 ohm

X : 2 A

Ia : 2 A

Calculate the following:

R3 (ohm) :

Given the ammeter reading X,
find the value of resistance R_3.

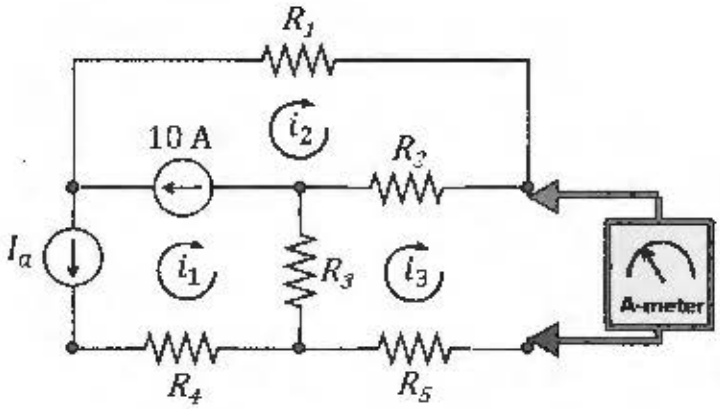

R1 = 23 Ω

R2 = 2 Ω

R4 = 34 Ω

R5 = 2 Ω

X = 2 A

Ia = 2 A

$i_3 = X = 2$

$i_1 = -I_a = -2$

$i_1 - i_2 = -10 \Rightarrow i_2 = i_1 + 10 = 8$

⊗ KVL IN MESH 3. $R_3(i_3 - i_1) + R_2(i_3 - i_2) + 0 + R_5 i_3 = 0$

$R_3 \cdot 4 + 2 \cdot (-6) + 2 \cdot 2 = 0$

$\boxed{R_3 = 2\ \Omega}$

Nodal Mesh 009

Problem has been graded.

Find the voltage v_a.
Use mesh analysis.

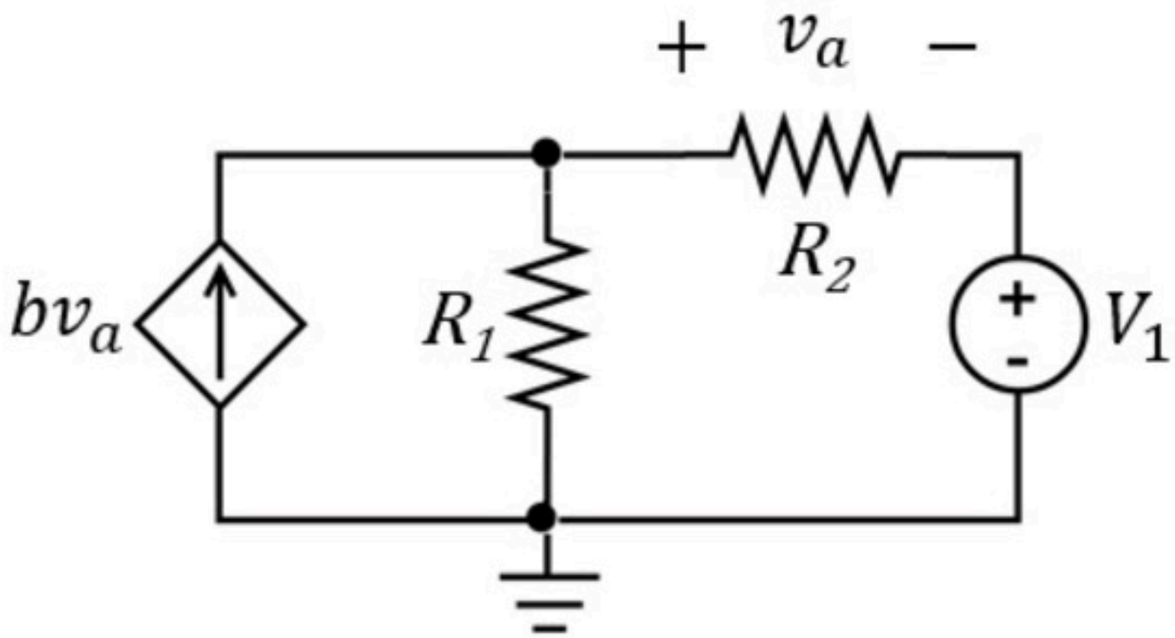

Given Variables:

R1 : 3 ohm

R2 : 4 ohm

b : 1 A/V

V1 : 10 V

Calculate the following:

va (V) :

Find the voltage v_a.
Use mesh analysis.

R1 = 3 Ω

R2 = 2 Ω

b = 1.5 A/V

V1 = 10 V

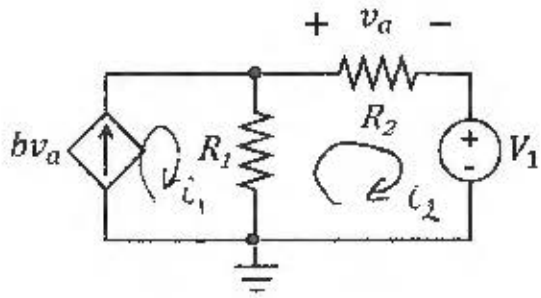

(*) $i_1 = b \cdot v_a = b R_2 i_2 = 3 i_2$

(*) KVL IN (2): $3(\underbrace{i_2 - i_1}_{-2i_2}) + 2 \cdot i_2 + 10 = 0$

$-4 i_2 = -10$

$i_2 = 2.5$ A $\qquad i_1 = 7.5$ A

$v_a = i_2 \cdot R_2 = 5V \Rightarrow \boxed{v_a = 5V}$

CHECK: KVL

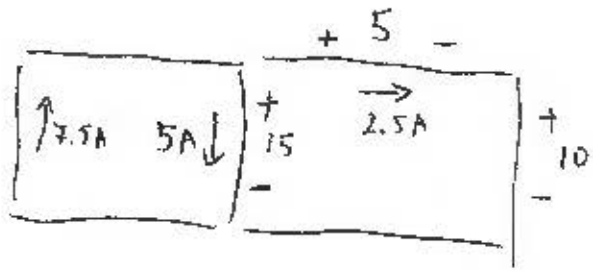

Nodal Mesh 010

Problem has been graded.

Find the mesh currents i_1, i_2, and i_3.

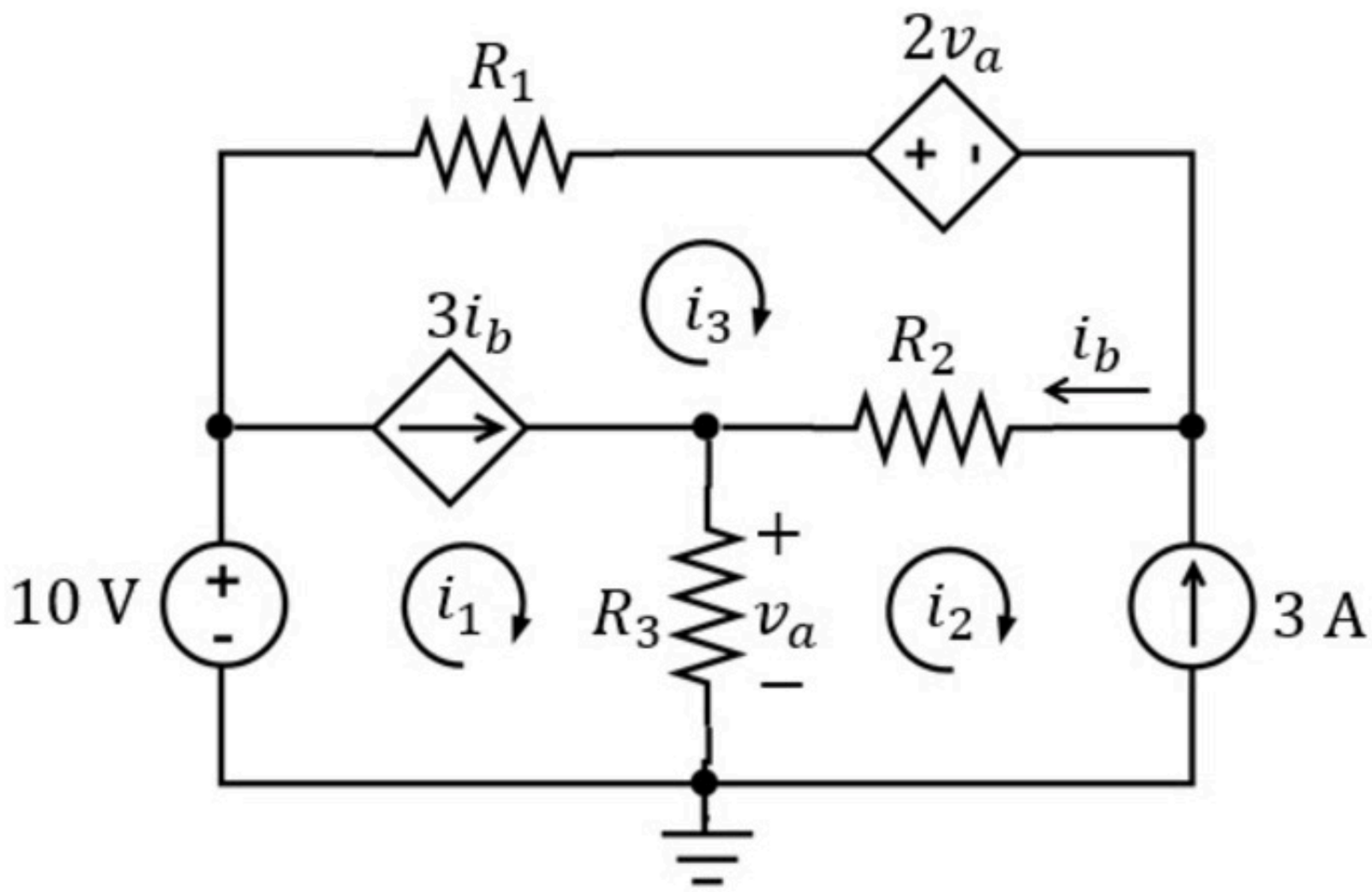

Given Variables:

R1 : 8 ohm

R2 : 2 ohm

R3 : 2 ohm

Calculate the following:

i1 (A) :

i2 (A) :

i3 (A) :

Find the mesh currents i_1, i_2, and i_3.

R1 = 16 Ω

R2 = 1 Ω

R3 = 1 Ω

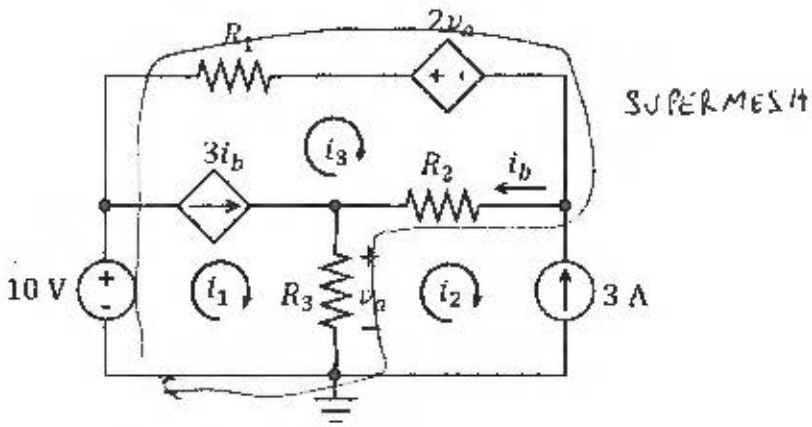

⊗ $\boxed{i_2 = -3A}$

⊗ $i_1 - i_3 = 3 \cdot i_b = 3(i_3 - i_2) = 3i_3 + 9 \Rightarrow i_1 = 4i_3 + 9$ (1)

⊗ KVL SUPERMESH: $-10 + 16 \cdot i_3 + 2 \cdot (R_3)(i_1 + 3)$
$+ 1(i_3 + 3) + 1 \cdot (i_1 + 3) = 0$

$\Rightarrow -10 + 16 i_3 + 8 i_3 + 24 + i_3 + 3 + 4 i_3 + 12 = 0$

$\Rightarrow 29 i_3 = -29$

$\Rightarrow \boxed{i_3 = -1A}$ $\boxed{i_1 = 5A}$

CHECK KVL

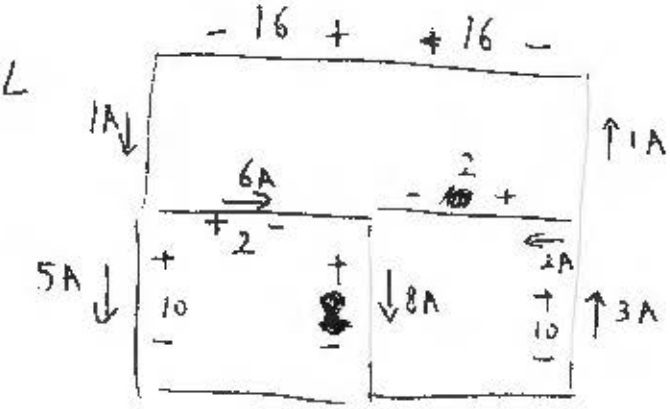

Nodal Mesh 011

Problem has been graded.

Find the value of the current i_b.
Use mesh analysis.

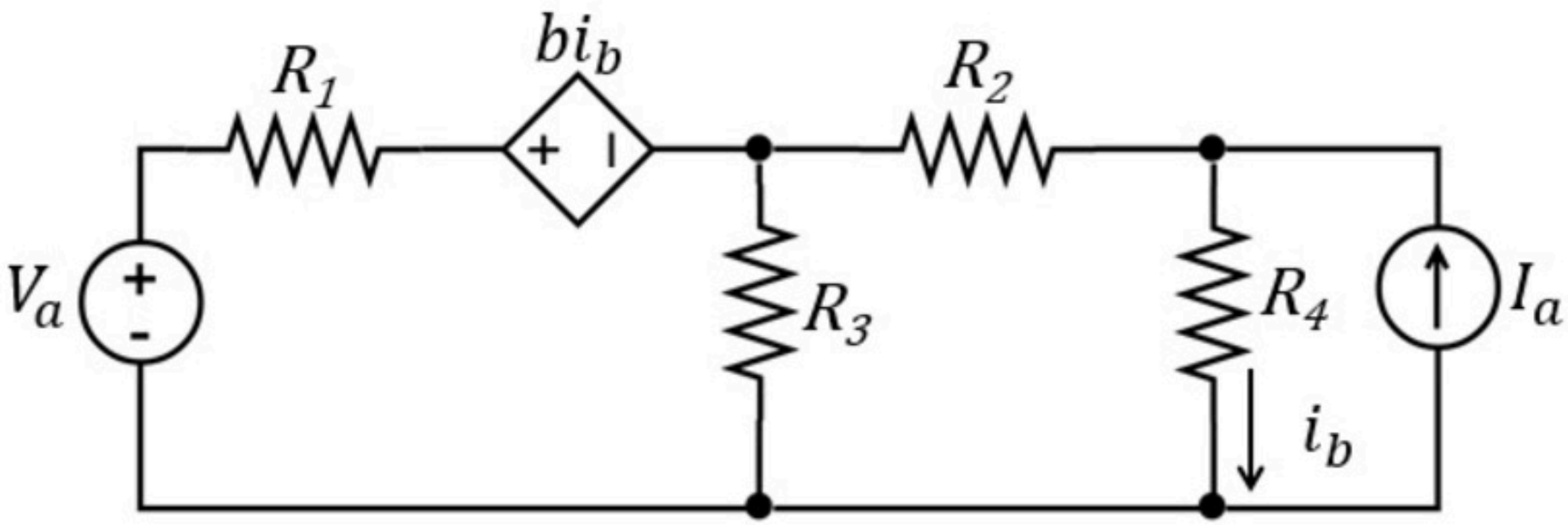

Given Variables:

Va : 16 V
R1 : 2 ohm
R2 : 6 ohm
R3 : 8 ohm
R4 : 1 ohm
b : 2 V/A
Ia : 1 A

Calculate the following:

ib (A) :

Hint: Do we need to use a supermesh?

Find the value of the current i_b.
Use mesh analysis.

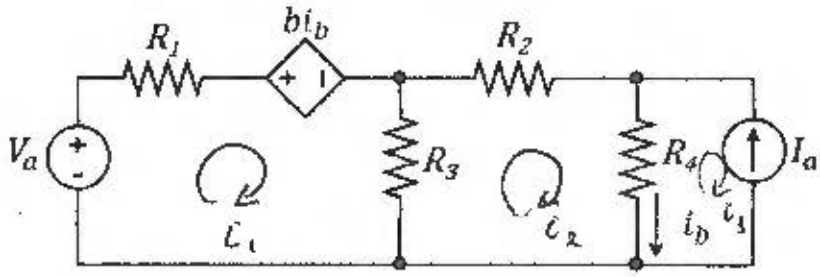

Va = 16 V

R1 = 2 Ω

R2 = 6 Ω

R3 = 8 Ω

R4 = 1 Ω

b = 2 V/A

Ia = 1 A

$i_3 = -I_a = -1\,A$

$i_b = i_2 - i_3 = i_2 + 1$

MESH 1: $-16 + 2 \cdot i_1 + 2 \cdot i_b + 8(i_1 - i_2) = 0$

$-16 + 2i_1 + 2i_2 + 2 + 8i_1 - 8i_2 = 0$

$10 i_1 - 6 i_2 = 14$

$5 i_1 - 3 i_2 = 7 \quad (1)$

MESH 2: $8(i_2 - i_1) + 6 i_2 + 1 \cdot (i_2 + 1) = 0$

$-8 i_1 + 15 i_2 = -1 \quad (2)$

$5 \times (1) + (2)$: $17 i_1 = 34 \Rightarrow i_1 = 2A \Rightarrow i_2 = 1A$

$i_b = i_2 + 1 \Rightarrow \boxed{i_b = 2A}$

CHECK KVL

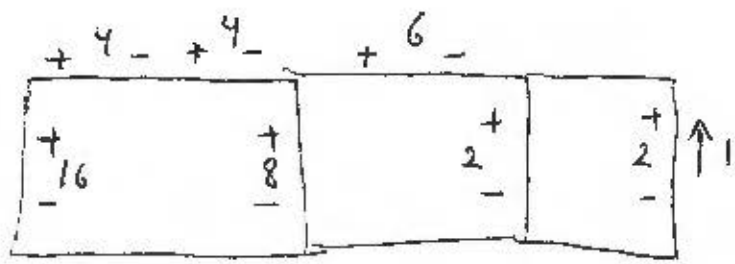

PP - Nodal Mesh 001

Problem has been graded.

Find v_1 and v_2. Solve using nodal analysis.

For extra practice: Afterwards solve again using mesh analysis.

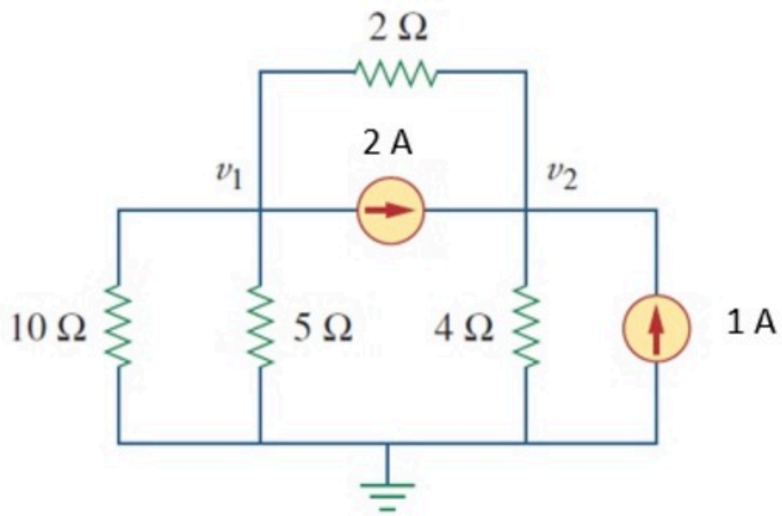

Given Variables:

. : . .

Calculate the following:

v1 (V) :

0 ✓

v2 (V) :

4 ✓

Hint: No supernodes

PP - Nodal Mesh 002

Problem has been graded.

Find I_o. Solve using nodal analysis.

For extra practice: Afterwards solve again using mesh analysis.

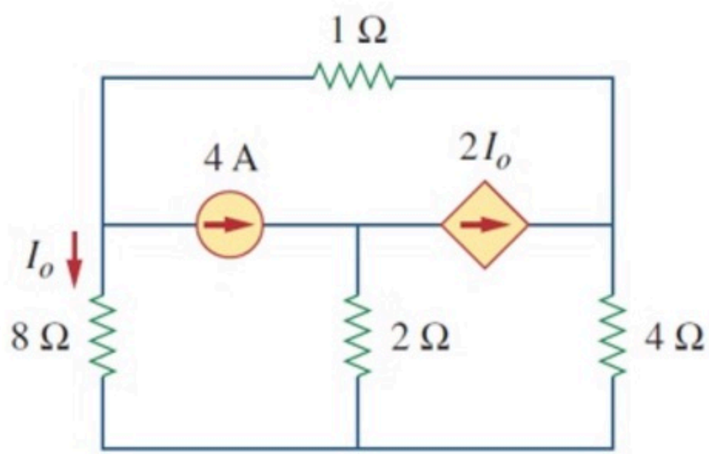

Given Variables:

. : . .

Calculate the following:

Io (A) :

-4

Hint: Write Io as a function of the node voltages

PP - Nodal Mesh 003

Problem has been graded.

Find V_1. Solve using nodal analysis.

For extra practice: Afterwards solve again using mesh analysis.

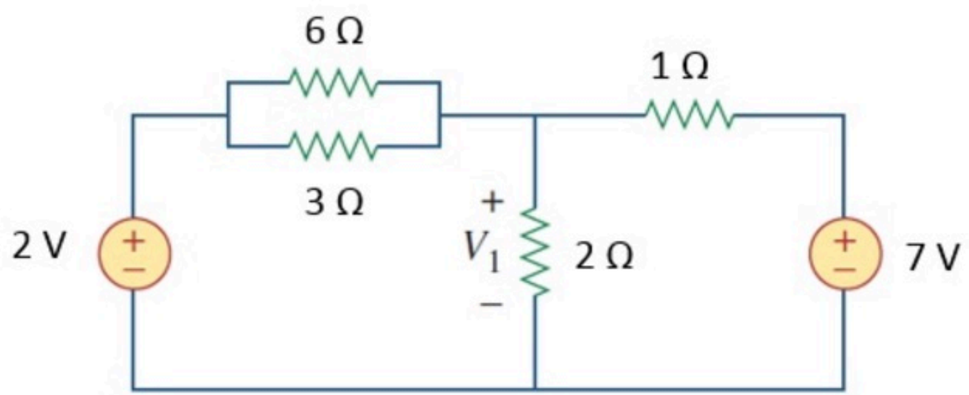

Given Variables:

. : . .

Calculate the following:

V1 (V) :

4

Hint: Choose GND strategically

PP - Nodal Mesh 004

Problem has been graded.

Find V_o. Solve using nodal analysis.

For extra practice: Afterwards solve again using mesh analysis.

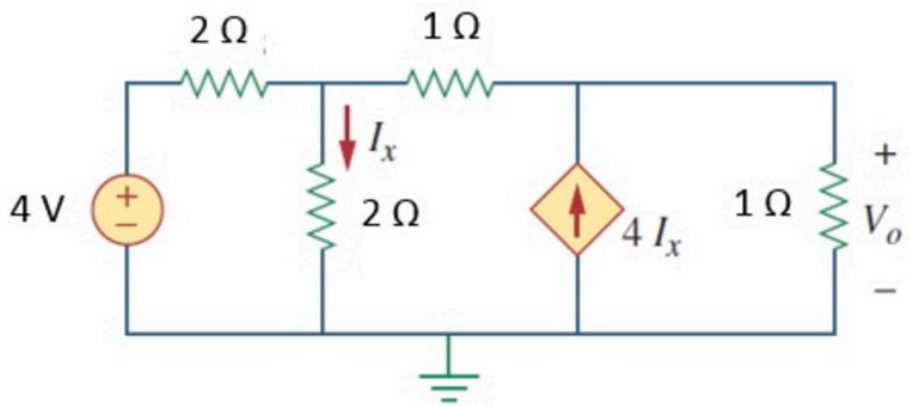

Given Variables:

. : . .

Calculate the following:

Vo (V) :

6

Hint: Express Ix as a function of node voltages

PP - Nodal Mesh 005

Problem has been graded.

Find I_b. Solve using nodal analysis.

For extra practice: Afterwards solve again using mesh analysis.

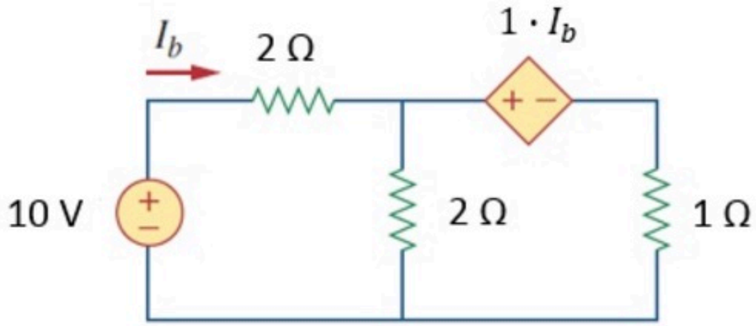

Given Variables:

. : . .

Calculate the following:

Ib (A) :

3

Hint: Need to use a supernode

PP - Nodal Mesh 006

Problem has been graded.

Find v_2. Solve using nodal analysis.

For extra practice: Afterwards solve again using mesh analysis.

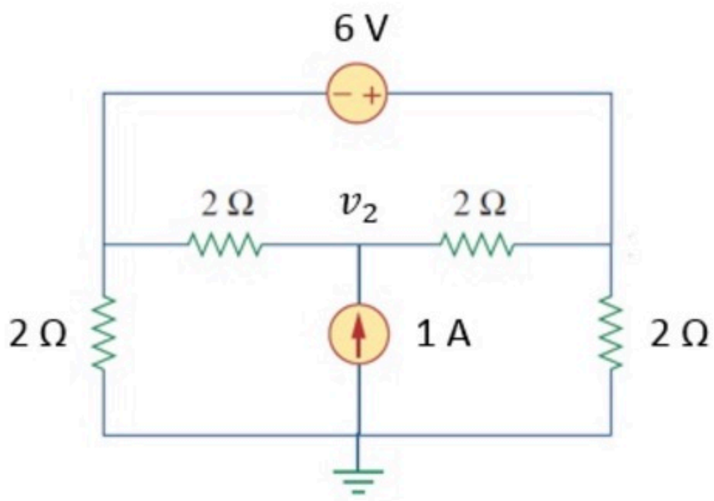

Given Variables:

. : . .

Calculate the following:

v2 (V) :

2

Hint: Use supernode or move GND

PP - Nodal Mesh 007

Problem has been graded.

Find i. Solve using nodal analysis.

For extra practice: Afterwards solve again using mesh analysis.

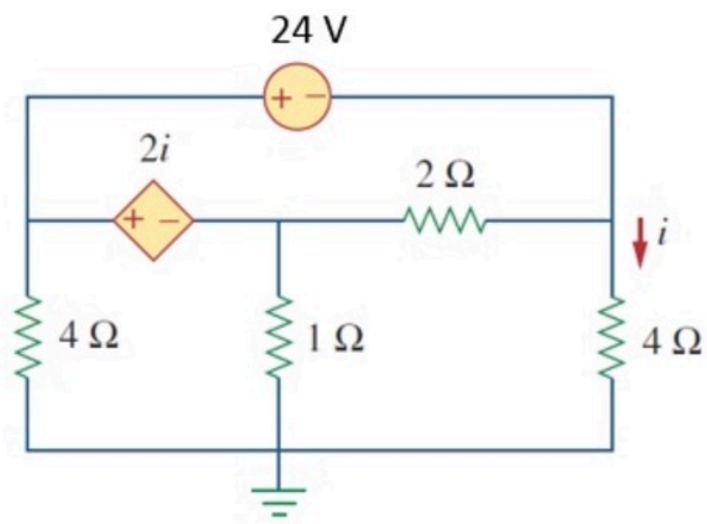

Given Variables:

. : . .

Calculate the following:

i (A) :

-7.5

Hint: Use supernode or move GND

PP - Nodal Mesh 008

Problem has been graded.

Find V_o. Solve using nodal analysis.

For extra practice: Afterwards solve again using mesh analysis.

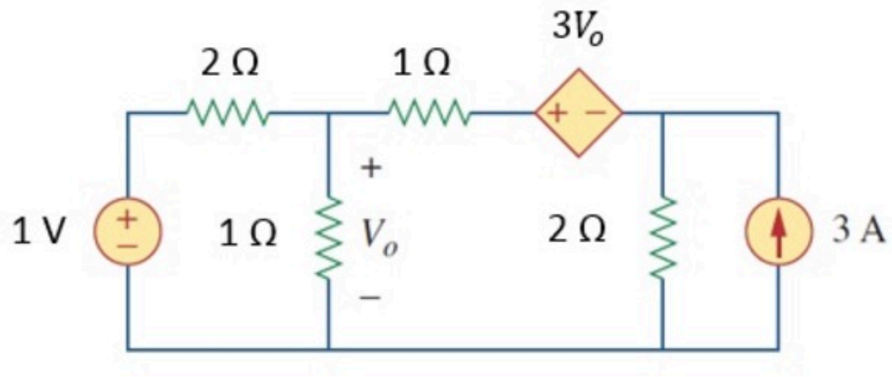

Given Variables:

. : . .

Calculate the following:

Vo (V) :

3

Hint: Use supernode

PP - Nodal Mesh 009

Problem has been graded.

Find v_1, v_2 and v_3. Solve using nodal analysis.

For extra practice: Afterwards solve again using mesh analysis.

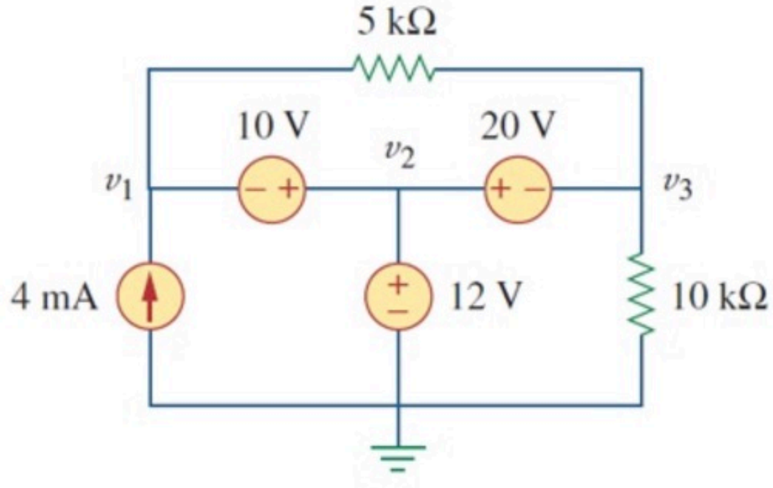

Given Variables:

. : . .

Calculate the following:

v1 (V) :

2 ✓

v2 (V) :

12 ✓

v3 (V) :

-8 ✓

Hint: Check the V-sources

PP - Nodal Mesh 010

Problem has been graded.

Find v_o and i_o. Solve using nodal analysis.

For extra practice: Afterwards solve again using mesh analysis.

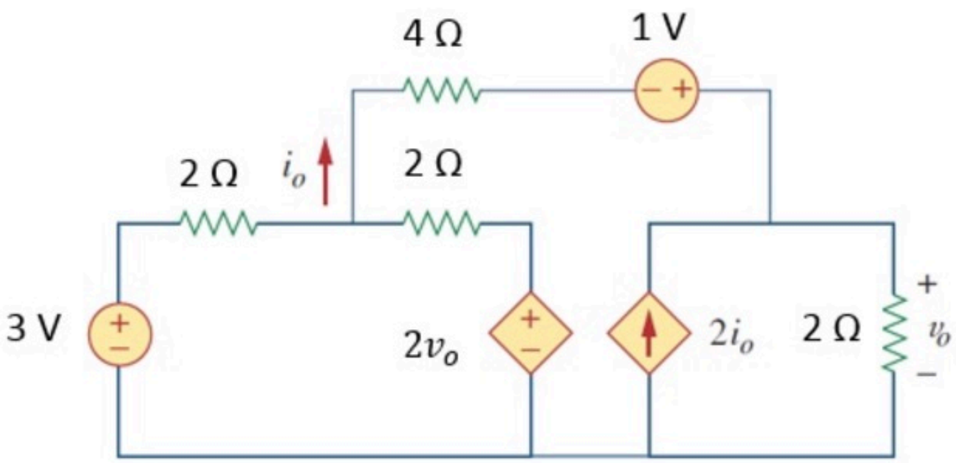

Given Variables:

. : . .

Calculate the following:

vo (V) :

3 ✓

io (A) :

0.5 ✓

Hint: Select GND strategically and use supernode

PP Nodal Mesh 011

Problem has been graded.

Find the currents i_1, i_2,and i_3. Solve using mesh analysis.

For extra practice: Afterwards solve again using nodal analysis.

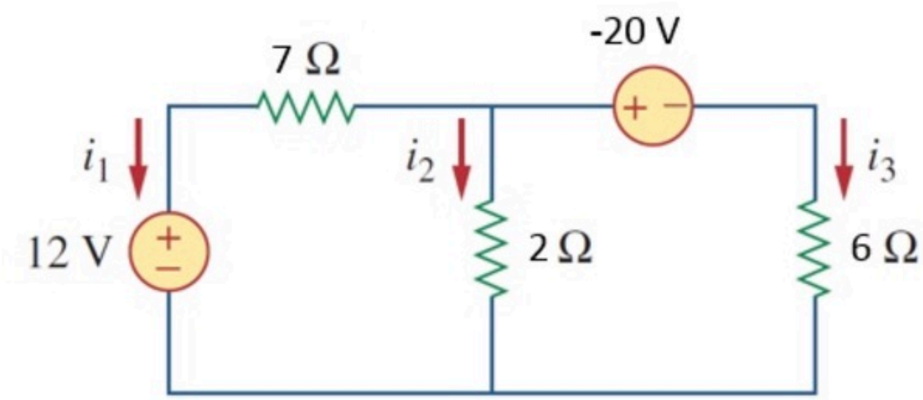

Given Variables:

. : . .

Calculate the following:

i1 (A) :

-2 ✓

i2 (A) :

-1 ✓

i3 (A) :

3 ✓

Hint: Define 2 mesh currents

PP Nodal Mesh 012

Unlimited Attempts.

Find the value of v_o. Solve using mesh analysis.

For extra practice: Afterwards solve again using nodal analysis.

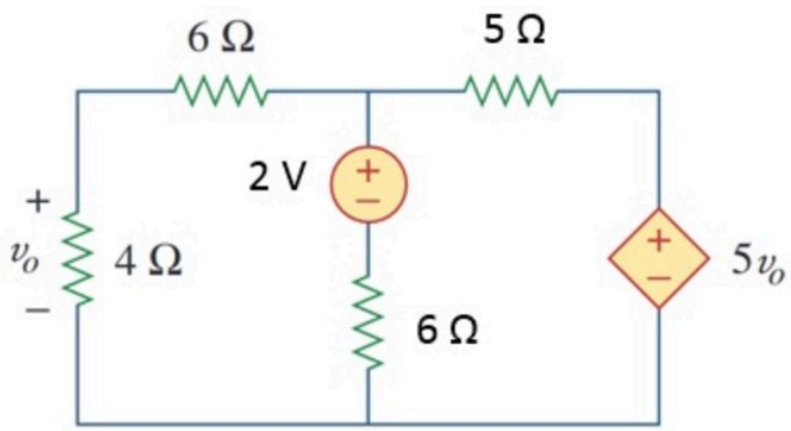

Given Variables:

. : . .

Calculate the following:

vo (V) :

2

Hint: Ignore vo at the start. Just find the two mesh currents.

PP Nodal Mesh 013

Unlimited Attempts.

Find the current I_o. Solve using mesh analysis.

For extra practice: Afterwards solve again using nodal analysis.

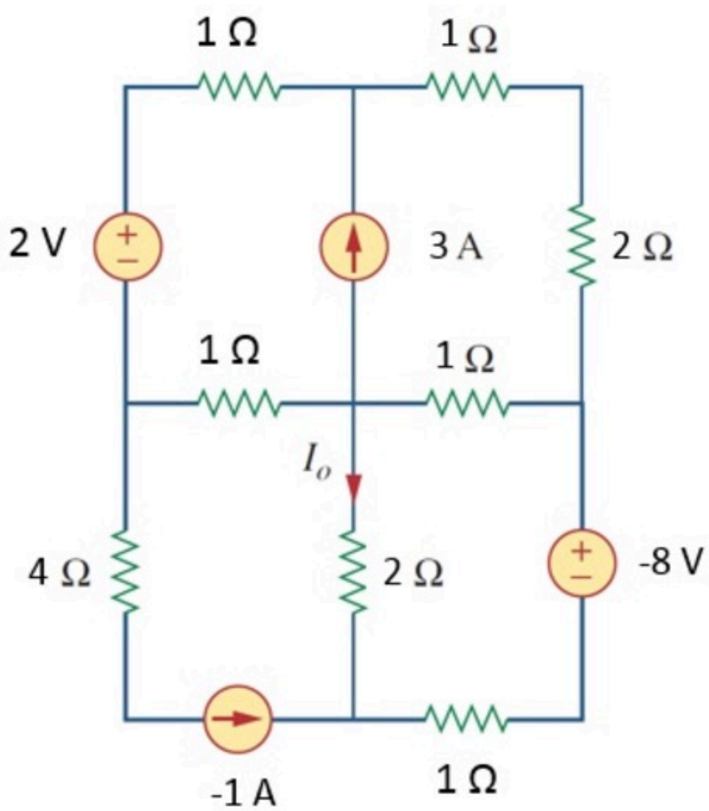

Given Variables:

. : . .

Calculate the following:

Io (A) :

-2 ✓

Hint: Use a supermesh

PP Nodal Mesh 014

Unlimited Attempts.

Find the current i_o. Solve using mesh analysis.

For extra practice: Afterwards solve again using nodal analysis.

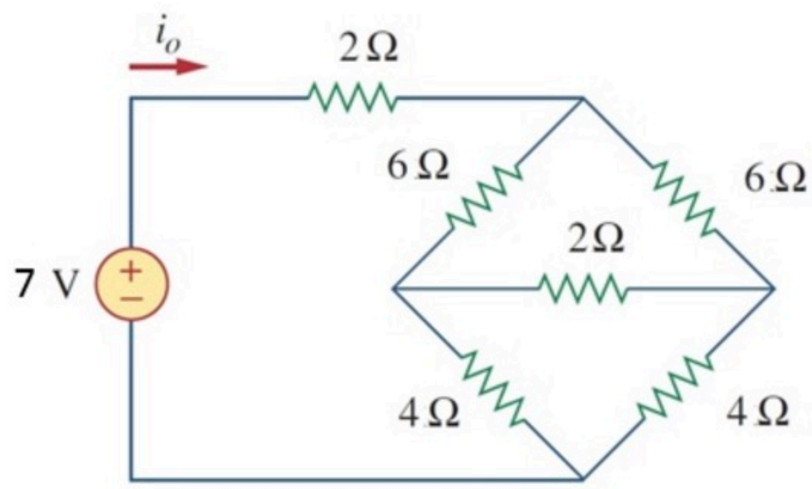

Given Variables:

. : . .

Calculate the following:

io (A) :

1

Hint: Symmetry will result in easier equations

PP Nodal Mesh 015

Unlimited Attempts.

Find the current i. Solve using mesh analysis.

For extra practice: Afterwards solve again using nodal analysis.

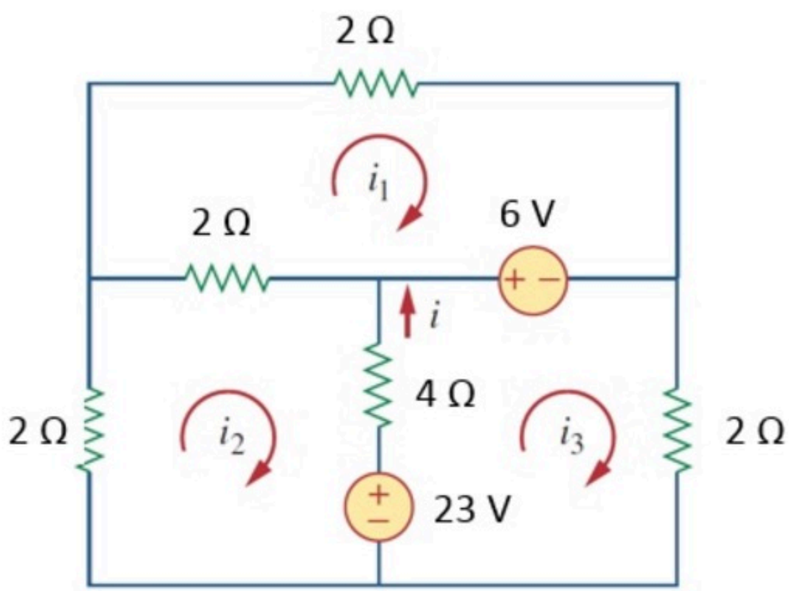

Given Variables:

. : . .

Calculate the following:

i (A) :

3.5

Hint: Mind the direction of the sources

PP Nodal Mesh 016

Unlimited Attempts.

Find the current i_o and the voltage v_{ab}. Solve using mesh analysis.

For extra practice: Afterwards solve again using nodal analysis.

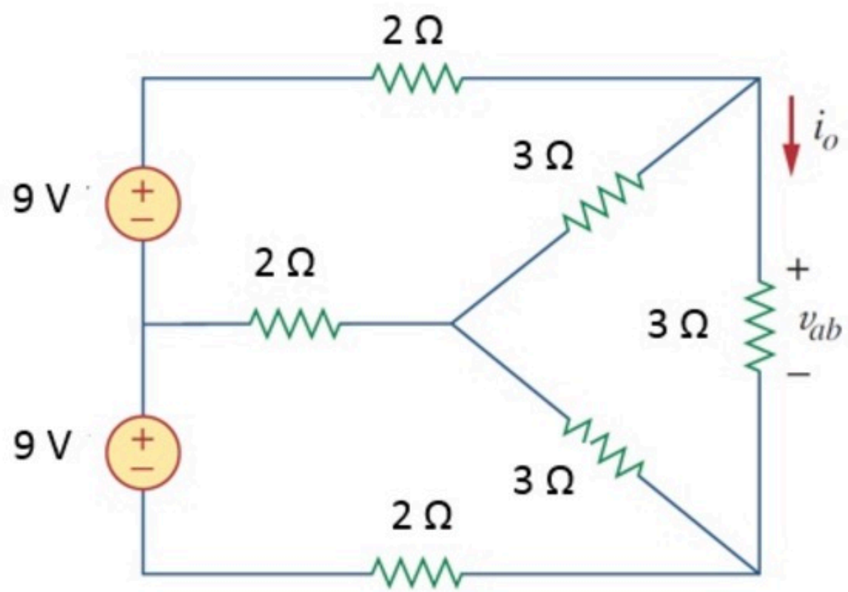

Given Variables:

. : . .

Calculate the following:

io (A) :

2 ✓

vab (V) :

6 ✓

Hint: Afterward, check the symmetry

PP Nodal Mesh 017

Unlimited Attempts.

Find the current i. Solve using mesh analysis.

For extra practice: Afterwards solve again using nodal analysis.

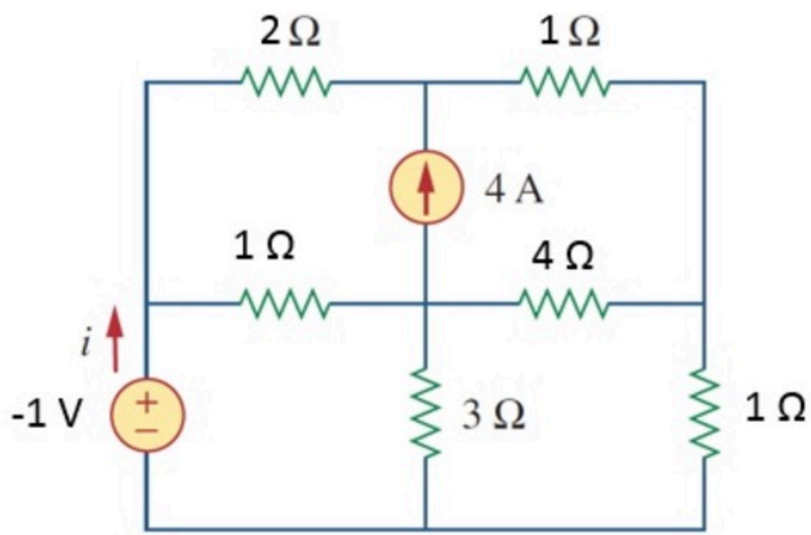

Given Variables:

. : . .

Calculate the following:

i (A) :

0

Hint: Use a supermesh

PP Nodal Mesh 018

Unlimited Attempts.

Find the current i_o and the voltage v_o. Solve using mesh analysis.

For extra practice: Afterwards solve again using nodal analysis.

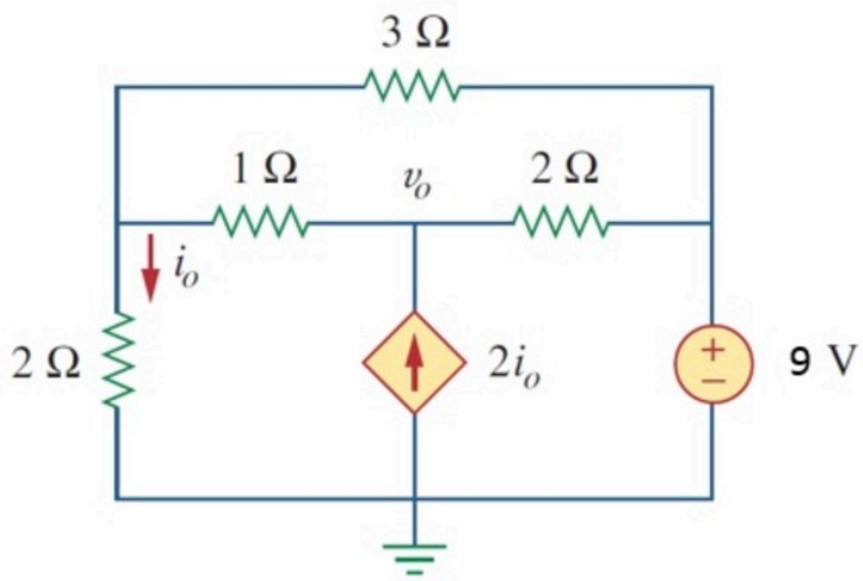

Given Variables:

. : . .

Calculate the following:

io (A) :

6 ✓

vo (V) :

19 ✓

Hint: Use a supermesh

PP Nodal Mesh 019

Unlimited Attempts.

Find the current i_o. Solve using mesh analysis.

For extra practice: Afterwards solve again using nodal analysis.

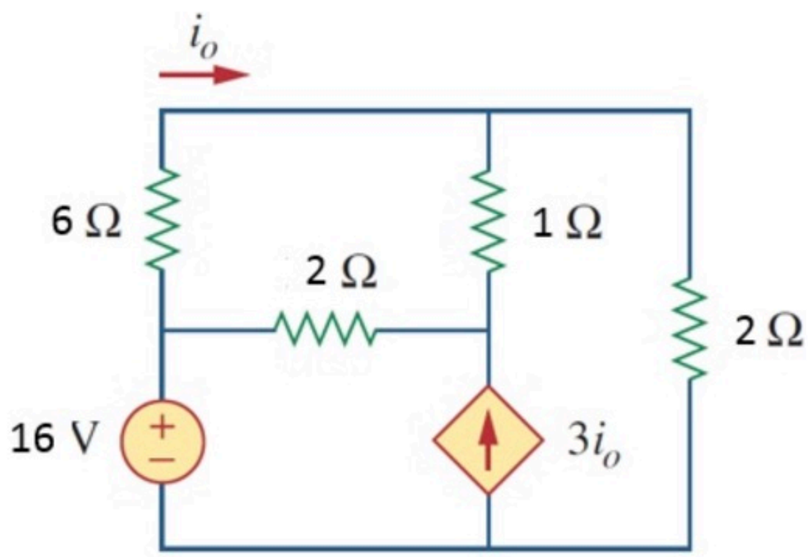

Given Variables:

. : . .

Calculate the following:

io (A) :

1 ✓

Hint: Use a supermesh

PP Nodal Mesh 020

Unlimited Attempts.

Find the voltage v_o. Solve using mesh analysis.

For extra practice: Afterwards solve again using nodal analysis.

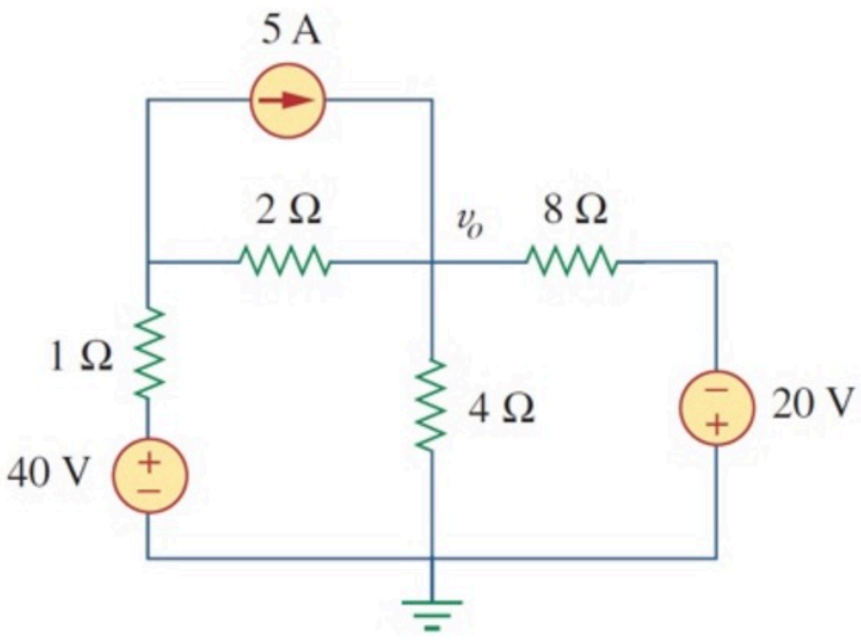

Given Variables:

. : . .

Calculate the following:

vo (V) :

20 ✓

Hint: Can we find a mesh current directly?

Circuit theorems 001

Problem has been graded.

A linear system has two inputs, v_a and v_b, and one output, v_{out} .
When $v_a = v_1$ and $v_b = v_2$, then $v_{out} = v_3$.
When $v_a = v_4$ and $v_b = v_5$, then $v_{out} = v_6$.

What is v_{out}, when $v_a = v_7$ and $v_b = v_8$?

Given Variables:

v1 : 3 V
v2 : 6 V
v3 : 12 V
v4 : 3 V
v5 : 4 V
v6 : 48 V
v7 : 3 V
v8 : 2 V

Calculate the following:

vout (V) :

Hint: Use the fact that the system is linear

A linear system as two inputs, v_a and v_b, and one output, v_{out}.
When $v_a = v_1$ and $v_b = v_2$, then $v_{out} = v_3$.
When $v_a = v_4$ and $v_b = v_5$, then $v_{out} = v_6$.

What is v_{out}, when $v_a = v_7$ and $v_b = v_8$?

v1 = 8 V

v2 = 0 V

v3 = 56 V

v4 = 0 V

v5 = -9 V

v6 = 45 V

v7 = 5 V

v8 = 8 V

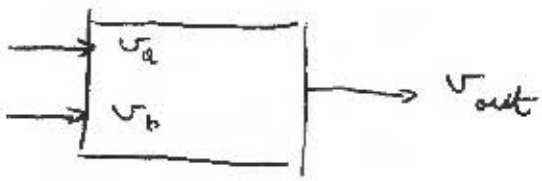

$$a \cdot v_a + b v_b = v_{out}$$

$$\begin{cases} a \cdot 8 + b \cdot 0 = 56 \\ a \cdot 0 + b(-9) = 45 \end{cases}$$

$$\Rightarrow \begin{cases} a = \frac{56}{8} = 7 \\ b = \frac{45}{-9} = -5 \end{cases}$$

$$\Rightarrow a \cdot v_a + b v_b = 7 \cdot 5 + (-5) \cdot 8$$
$$= -5\,V$$

$$\boxed{v_{out} = -5\,V}$$

Circuit theorems 002

Problem has been graded.

Use superposition to find i_x.

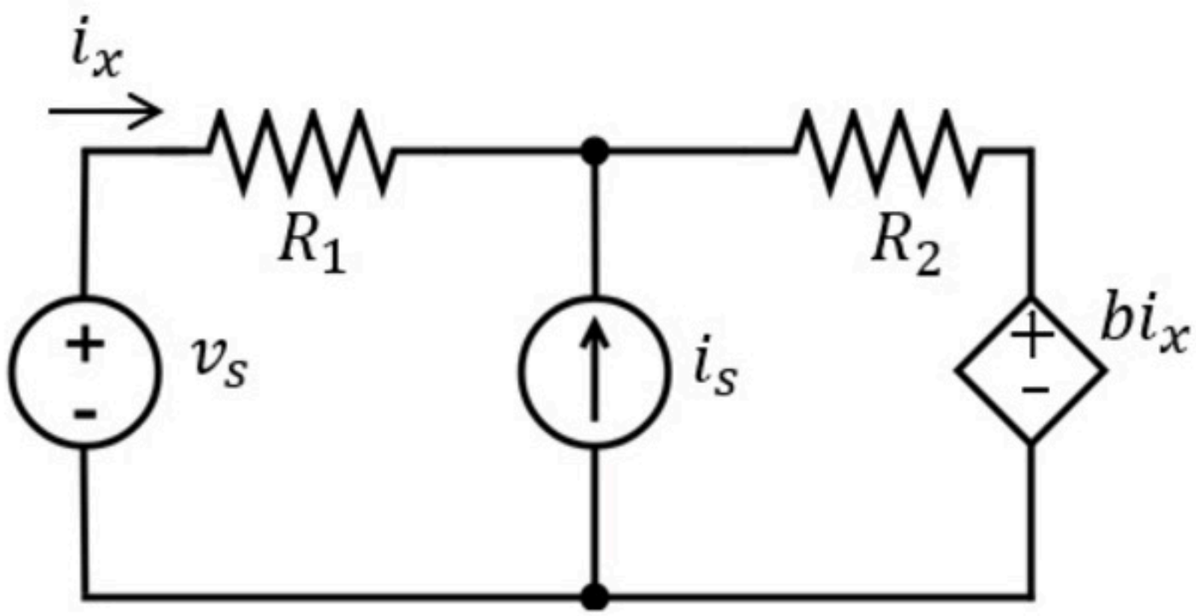

Given Variables:

R1 : 3 ohm

R2 : 4 ohm

b : 4 V/A

vs : 15 V

is : 1 A

Calculate the following:

ix (A) :

Use superposition to find i_x.

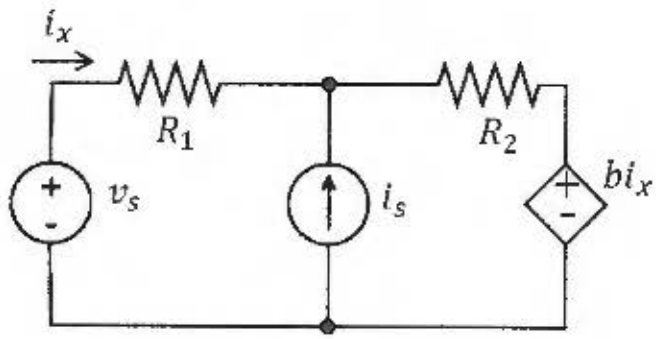

R1 = 4 ohm

R2 = 4 ohm

b = 3 V/A

vs = 30 V

is = 2 A

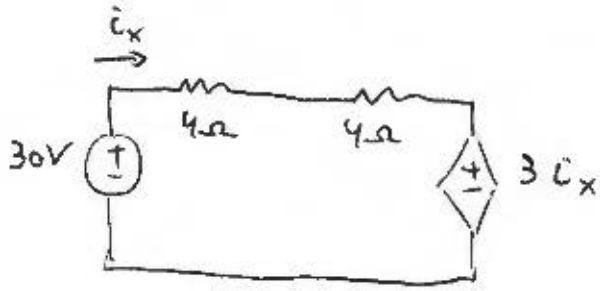

KVL: $30 = i_x \cdot 4 + i_x \cdot 4 + 3i_x$

$i_x = \frac{30}{11}$ A

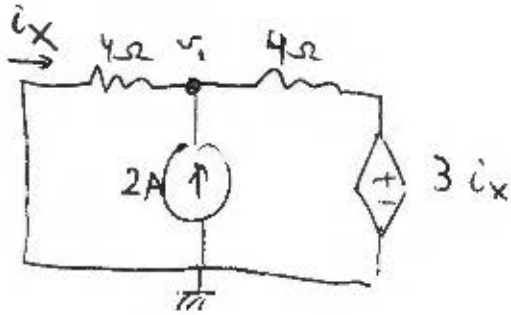

node: $\frac{v_1}{4} - 2 + \frac{v_1 - 3i_x}{4} = 0$

$i_x = -\frac{v_1}{4}$

$v_1 - 8 + v_1 - 3\left(\frac{-v_1}{4}\right) = 0$

$11 v_1 = 32$

$v_1 = \frac{32}{11} \Rightarrow i_x = -\frac{8}{11}$ A

$i_x = \frac{30}{11} - \frac{8}{11} = \frac{22}{11}$ A $\Rightarrow$ $\boxed{i_x = 2A}$

Circuit theorems 003

Unlimited Attempts.

Find the Thevenin equivalent model of this circuit, as seen between a and b.

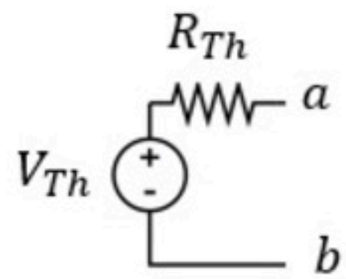

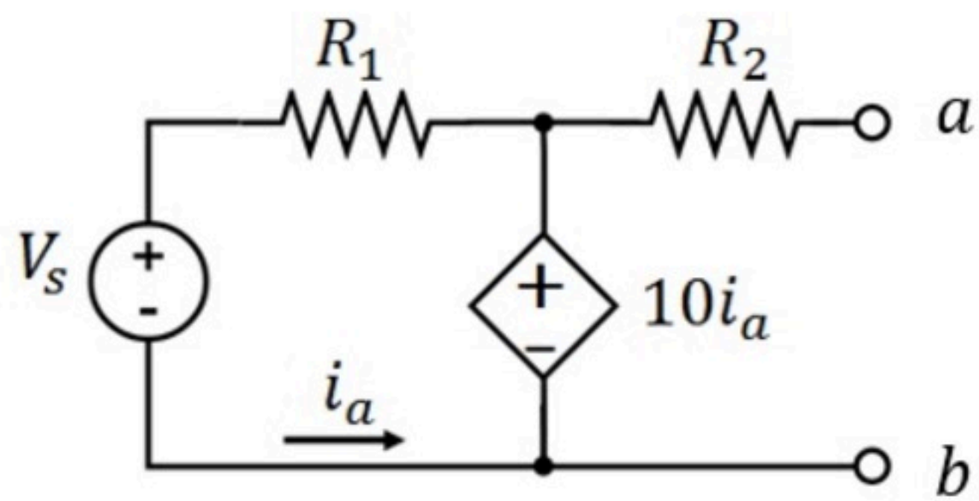

Given Variables:

R1 : 9 ohm

R2 : 2 ohm

Vs : 5 V

Calculate the following:

Vth (V) :

Rth (ohm) :

Hint: Find any two of Voc, Isc and Req

Find the Thevenin equivalent model of this circuit, as seen between a and b.

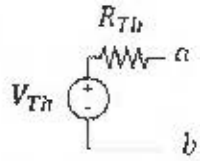

R1 = 8 ohm

R2 = 6 ohm

Vs = 6 V

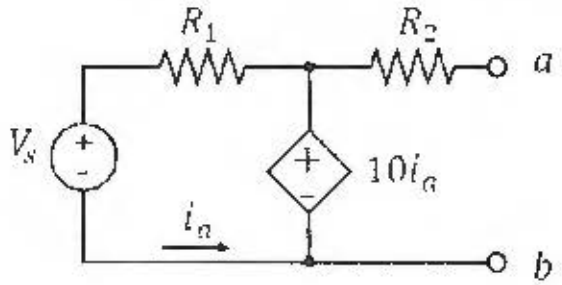

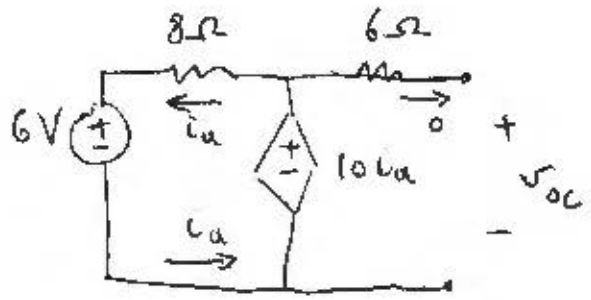

$$i_a = \frac{10 i_a - 6}{8}$$

$$2 i_a = 6 \Rightarrow i_a = 3\,A$$

$$v_{oc} = 10 i_a = 30V$$

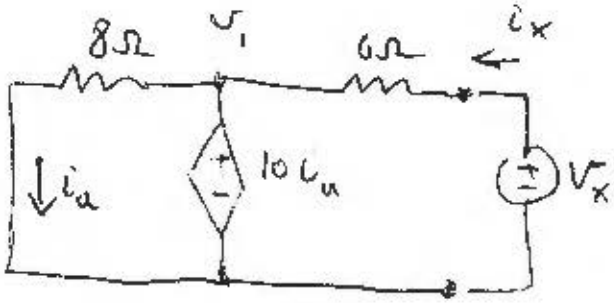

$$v_1 = 10 i_a = 8 i_a$$

$$2 i_a = 0 \Rightarrow i_a = 0$$

$$\Rightarrow i_x = \frac{v_x - 0}{6}$$

$$\Rightarrow \frac{v_x}{i_x} = 6\,\Omega$$

$$\boxed{R_{TH} = 6\,\Omega}$$

$$\boxed{V_{TH} = 30V}$$

Circuit theorems 004

Unlimited Attempts.

The box contains a linear circuit.
When $R = R_1$, we measure $i = I_1$.
When $R = R_2$, we measure $i = I_2$.

What value of $R = R_3$ results in $i = I_3$?

What is the maximum value of $i = i_{max}$ that can be achieved (assuming of $R \geq 0$)?

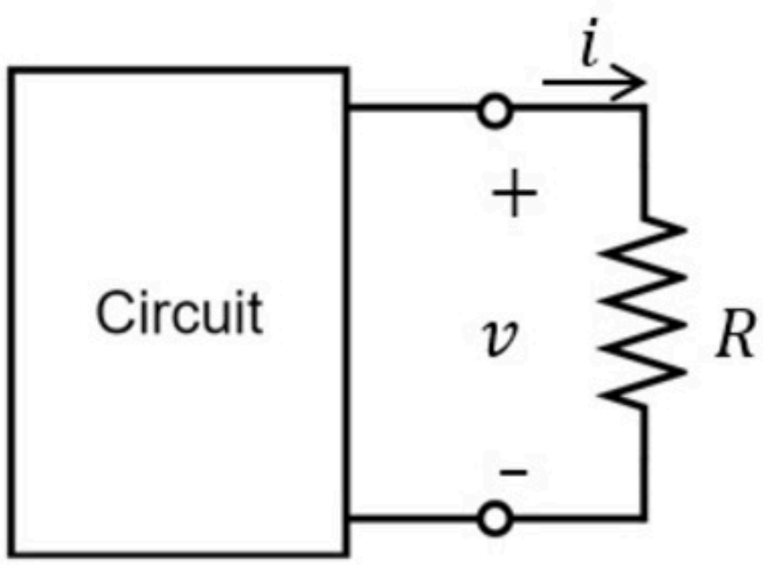

Given Variables:

R1 : 1 ohm

R2 : 3 ohm

I1 : 10 A

I2 : 6 A

I3 : 2 A

Calculate the following:

R3 (ohm) :

imax (A) :

Hint: Replace the circuit by its Thevenin model

The box contains a linear circuit.
When $R = R_1$, we measure $i = I_1$.
When $R = R_2$, we measure $i = I_2$.

What value of $R = R_3$ results in $i = I_3$?

What is the maximum value of $i = i_{max}$ that can be achieved (assuming of $R \geq 0$)?

R1 = 5 ohm

R2 = 8 ohm

I1 = 4 A

I2 = 3 A

I3 = 2 A

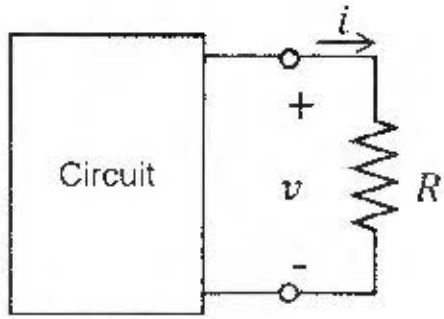

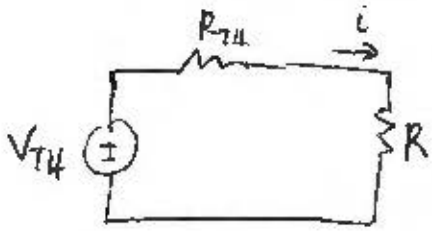

(1) $4 = \dfrac{V_{TH}}{R_{TH}+5} \Rightarrow 4R_{TH} + 20 = V_{TH}$

(2) $3 = \dfrac{V_{TH}}{R_{TH}+8} \Rightarrow 3R_{TH} + 24 = V_{TH}$

$\overset{(1)-(2)}{\Longrightarrow}$ $R_{TH} = 4\,\Omega$

$V_{TH} = 36\,V$

(a) $I_3 = 2 = \dfrac{V_{TH}}{R_{TH}+R} = \dfrac{36}{4+R} \Rightarrow R + R_{TH} = 18 \Rightarrow \boxed{R = 14\,\Omega}$

(b) i_{MAX} WHEN $R = 0 \Rightarrow i_{MAX} = \dfrac{V_{TH}}{R_{TH}} = \dfrac{36}{4} = 9$

$\boxed{i_{MAX} = 9\,A}$

Circuit theorems 005

Problem has been graded.

Find the Norton equivalent model of this circuit, as seen between a and b.

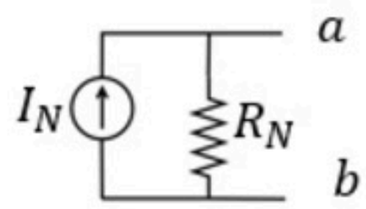

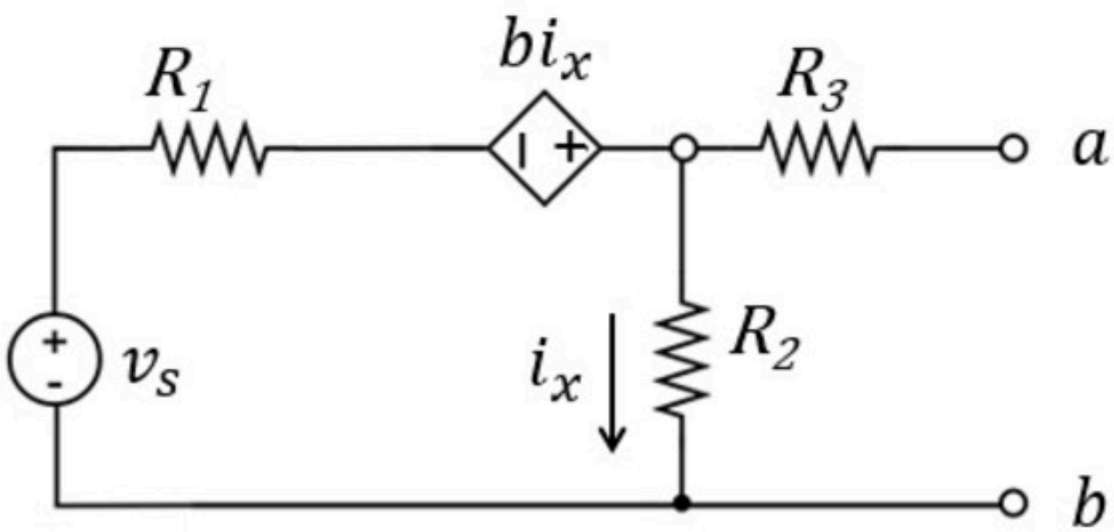

Given Variables:

R1 : 2 ohm

R2 : 6 ohm

R3 : 3 ohm

vs : 18 V

b : 6 V/A

Calculate the following:

IN (A) :

RN (ohm) :

Find the Norton equivalent model of this circuit, as seen between a and b.

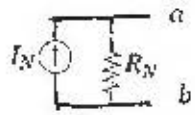

R1 = 2 ohm

R2 = 4 ohm

R3 = 4 ohm

vs = 12 V

b = 2 A/V

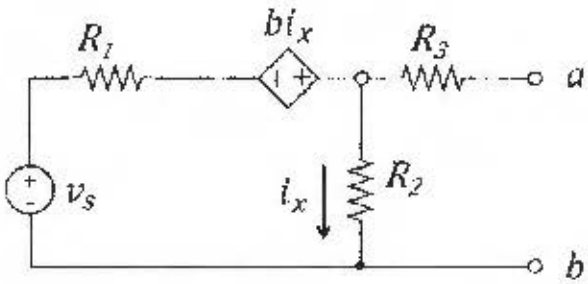

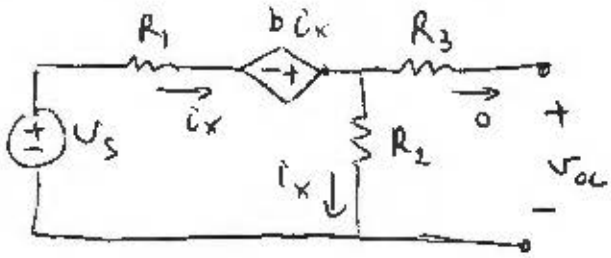

KVL: $v_s - R_1 i_x + b i_x - R_2 i_x = 0$

$12 - \cancel{2 i_x} + \cancel{2 i_x} - 4 i_x = 0$

$i_x = 3A \Rightarrow v_{oc} = R_2 i_x$

$= 12V$

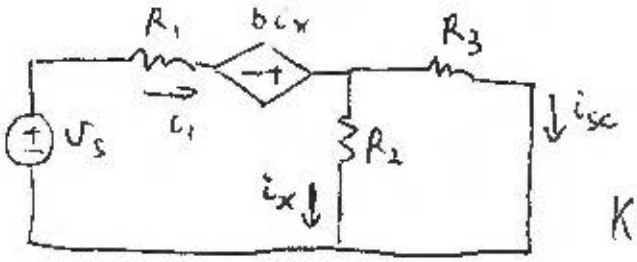

$i_x = \frac{R_3}{R_2 + R_3} i_1 = \frac{4}{8} i_1 \Rightarrow i_x = \frac{i_1}{2}$

KVL: $v_s - R_1 i_1 + b i_x - R_2 i_x = 0$

$12 - 2 \cdot 2 \cdot i_x + 2 \cdot i_x - 4 i_x = 0$

$6 i_x = 12 \Rightarrow i_x = 2A$

$i_{sc} = i_1 - i_x = 2A$

$v_{oc} = 12V$

$i_{sc} = 2A$

$\Rightarrow \boxed{I_N = 2A}$

$R_N = \frac{v_{oc}}{i_{sc}} = 6\Omega \Rightarrow \boxed{R_N = 6\Omega}$

Circuit theorems 006

Problem has been graded.

Use source transformations to find the current i_x.

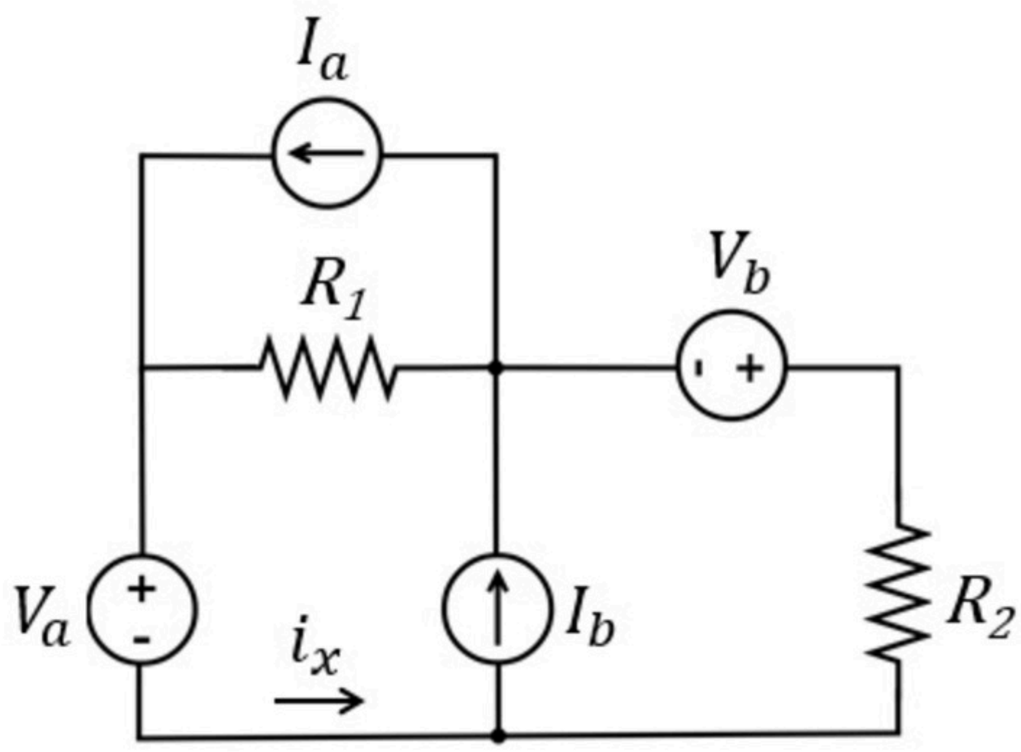

Given Variables:

Va : 12 V

Vb : 6 V

Ia : 5 A

Ib : 2 A

R1 : 15 ohm

R2 : 12 ohm

Calculate the following:

ix (A) :

Use source transformations to find the current i_x.

Va = 12 V

Vb = 6 V

Ia = 4 A

Ib = 6 A

R1 = 3 ohm

R2 = 3 ohm

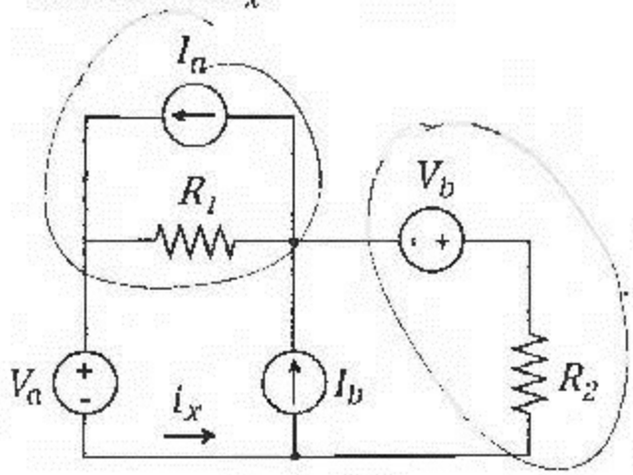

$V_1 = I_a \cdot R_1 = 4 \cdot 3 = 12V$

$I_2 = \frac{V_b}{R_2} = \frac{6}{3} = 2A$

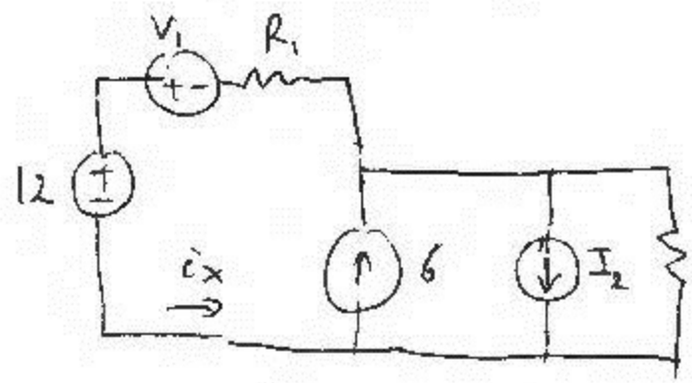

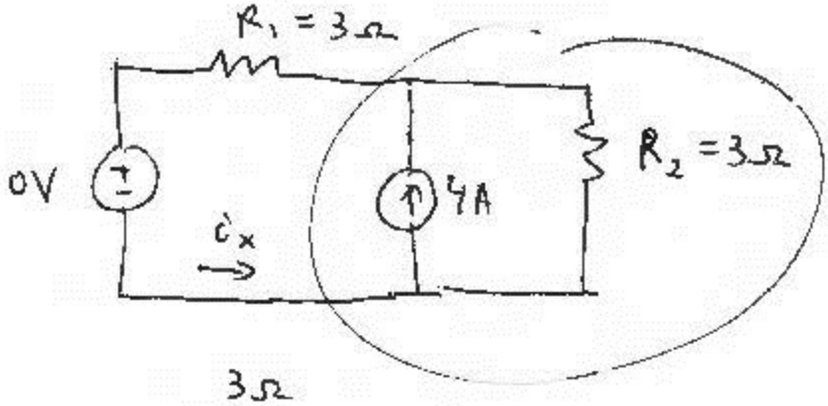

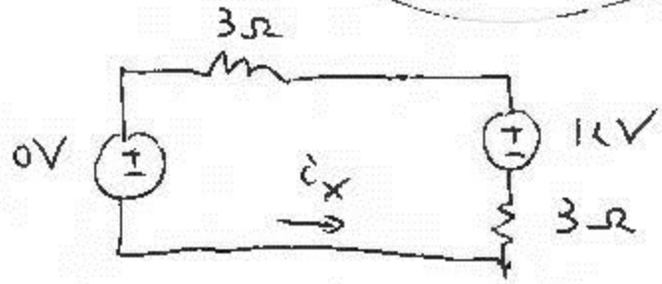

$i_x = \frac{12V}{6\Omega} = 2A$

$\boxed{i_x = 2A}$

Circuit theorems 007

Unlimited Attempts.

Find the R_L for maximum power transfer.

Find the max power transferred to R_L.

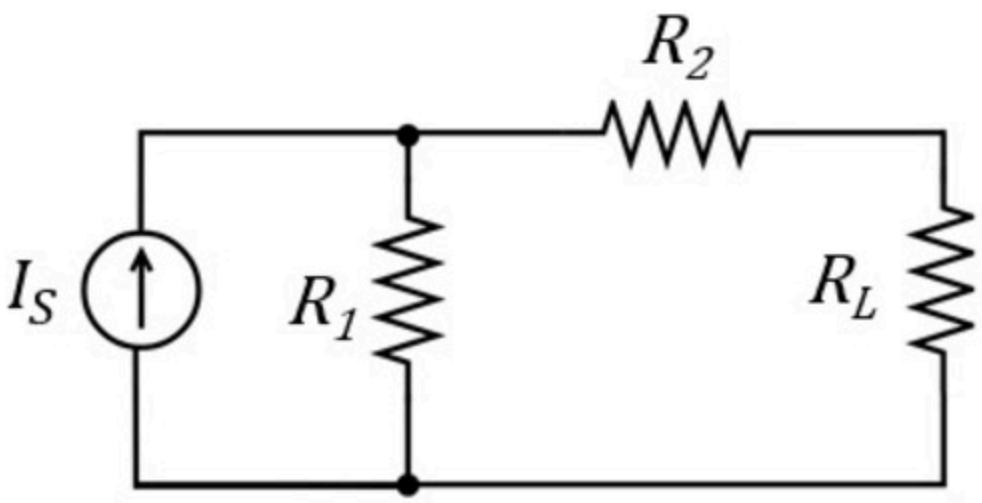

Given Variables:

Is : 12 A

R1 : 4 ohm

R2 : 12 ohm

Calculate the following:

RL (ohm) :

Pmax (W) :

Hint: Replace the circuit (without the load) by its Thevenin model.

Find the R_L for maximum power transfer.

Given I_S , find the max power transferred to R_L.

Is = 4 A

R1 = 45 ohm

R2 = 45 ohm

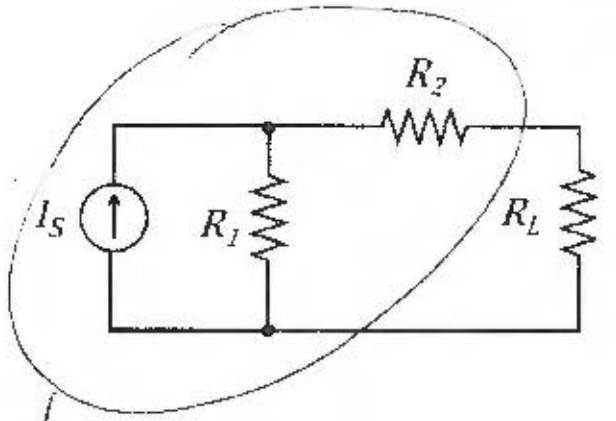

→ FIND THEVENIN MODEL

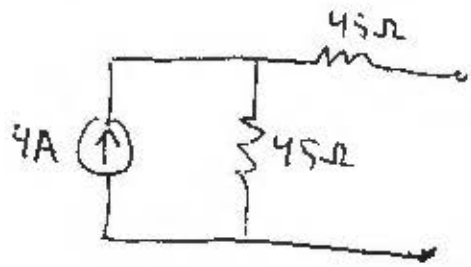

$v_{oc} = 4 \cdot 45 = 180V$

$R_{TH} = 45 + 45 = 90\Omega$

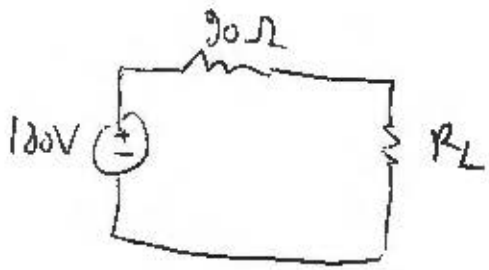

FOR MAX POWER TRANSFER

$R_L = R_{TH} = 90\Omega$

$\boxed{R_L = 90\Omega}$

$P = R_L \cdot i^2 \qquad i = \frac{180}{90 + R_L} = 1A$

$\boxed{P_{MAX} = 90W}$

Circuit theorems 008

Problem has been graded.

Determine the resistance R_1 such that the power dissipated in R_2 is maximum.

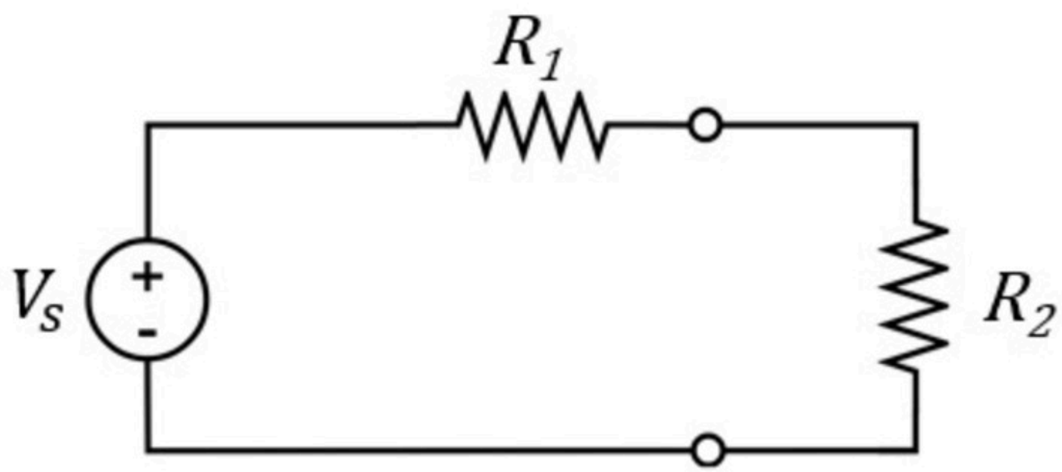

Given Variables:

Vs : 12 V

R2 : 7 ohm

Calculate the following:

R1 (ohm) :

Determine the resistance R_1 such that the power dissipated in R_2 is maximum.

Vs = 12 V

R2 = 3 ohm

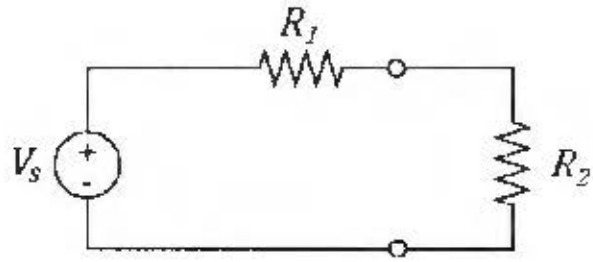

$$i = \frac{V_s}{R_1 + R_2}$$

$$P = R_2 \, i^2 = \frac{R_2 \, V_s^2}{(R_1 + R_2)^2}$$

$$P = \frac{3 \cdot 144}{(R_1 + 3)^2}$$

$$\frac{dP}{dR_1} = -2 \cdot \frac{3 \cdot 144}{(R_1 + 3)^3} = 0 \iff R_1 = \infty$$

$\hookrightarrow$ ALWAYS DECREASING

P_{MAX} WHEN $\boxed{R_1 = 0\,\Omega}$

Circuit theorems 009

Unlimited Attempts.

The resistance R_1 is a variable resistor that can take on values in the range $0 \leq R_1 \leq 24\Omega$.

1. Find the value of $R_1 = R_{1a}$ that maximizes current i_1 and the resulting maximum current $i_1 = i_{1a}$.
2. Find the value of $R_1 = R_{1b}$ that maximizes voltage v_1 and the resulting maximum voltage $v_1 = v_{1b}$.
3. Find the value of $R_1 = R_{1c}$ that maximizes the power received by R_1 and the resulting maximum power P_{1c}.

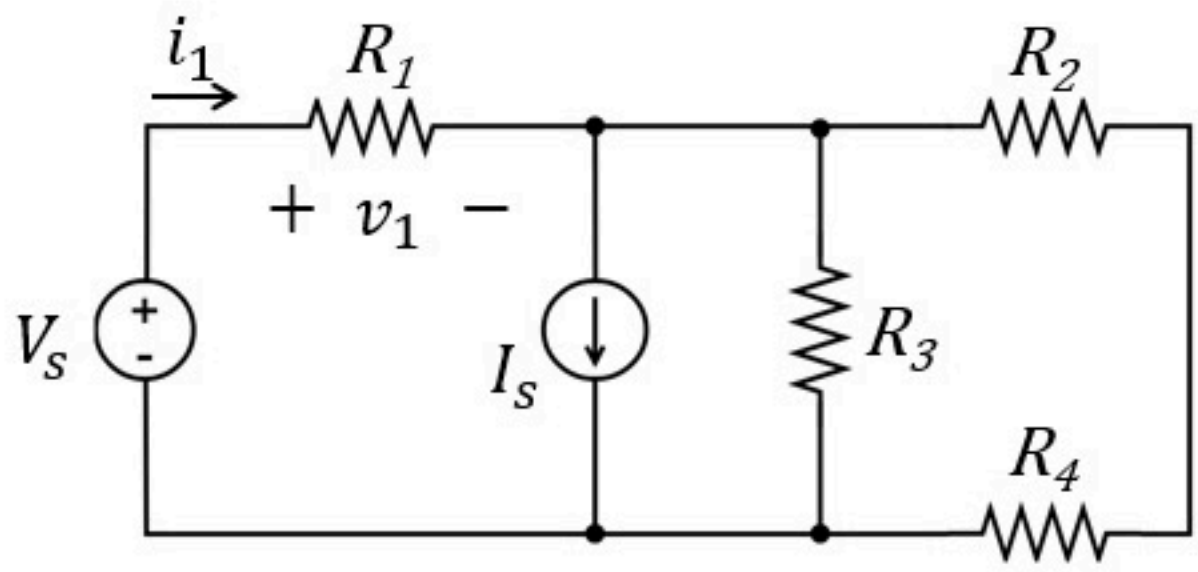

Given Variables:

Vs : 36 V

Is : 2 A

R2 : 12 ohm

R3 : 18 ohm

R4 : 24 ohm

Calculate the following:

i1a (A) :

R1a (ohm) :

v1b (V) :

R1b (ohm) :

P1c (W) :

R1c (ohm) :

Hint: Replace the circuit (without R1) by its Thevenin model.

The resistance R_l is a variable resistor that can take on values in the range $0 \leq R_l \leq 24\Omega$.

1. Find the value of $R_1 = R_{1a}$ that maximizes current i_1 and the resulting current $i_1 = i_{1a}$.
2. Find the value of $R_1 = R_{1b}$ that maximizes voltage v_1 and the resulting current $v_1 = v_{1b}$.
3. Find the value of $R_1 = R_{1c}$ that maximizes the power received by R_1 and the resulting power P_{1c}.

Vs = 12 V

Is = 3 A

R2 = 12 ohm

R3 = 18 ohm

R4 = 24 ohm

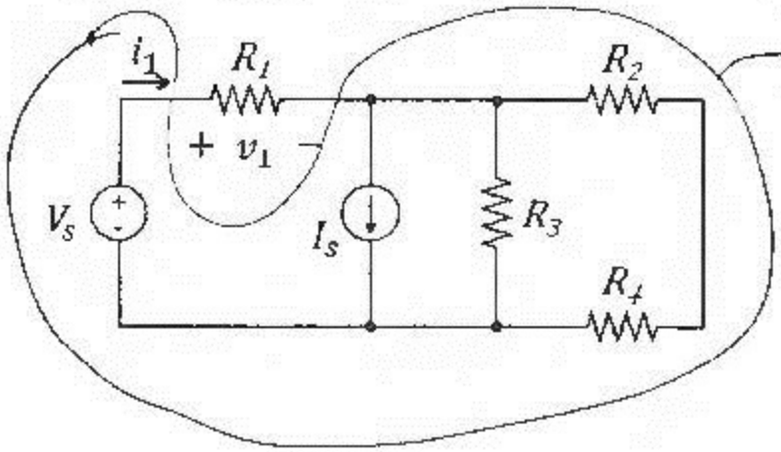

FIND THEVENIN MODEL

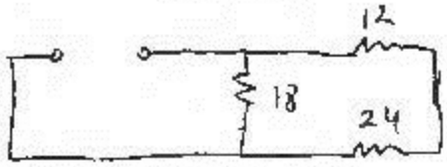

$\Rightarrow R_{TH} = 18 \,//\, (12+24) = \left(\frac{1}{18} + \frac{1}{36}\right)^{-1}$

$= \left(\frac{3}{36}\right)^{-1} = 12\,\Omega$

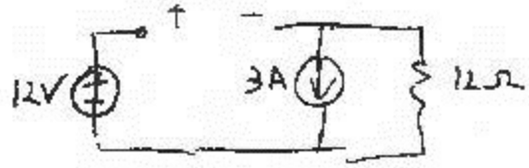

SOURCE TRANSFORM

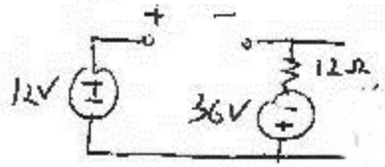

$v_{oc} = 48V$

$\Rightarrow$

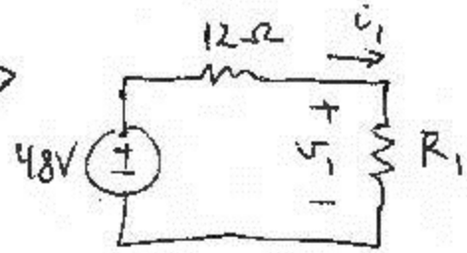

① $\boxed{R_1 = 0}$ $\quad i_1 = \frac{48}{12} = 4 \Rightarrow \boxed{i_1 = 4A}$

② $\boxed{R_1 = 24\,\Omega}$ $\quad v_1 = 48 \cdot \frac{24}{24+12} = 48 \cdot \frac{2}{3} = 32$

$\boxed{v_1 = 32V}$

③ $R_1 = R_{TH} \Rightarrow \boxed{R_1 = 12\,\Omega}$

$i = \frac{48}{24} = 2A \Rightarrow P = i^2 R = 4 \cdot 12$

$\boxed{P = 48W}$

Circuit theorems 010

Unlimited Attempts.

Find (and think about how to minimize your calculations)

1. The value of $v_a = v_{a1}$ when R_L= 12 Ω
2. The value of $R_L = R_{L2}$ that results in v_a = 4 V
3. The value of $R_L = R_{L3}$ that results in i_a = 1 A

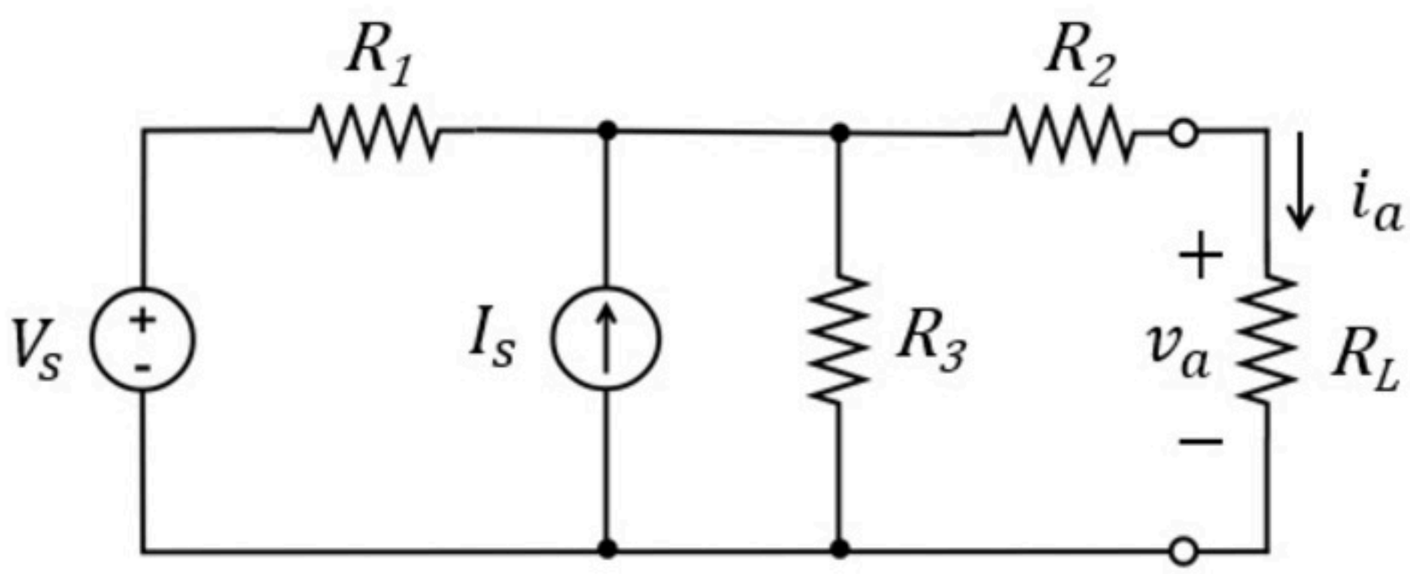

Given Variables:

Vs : 12 V

Is : 1 A

R1 : 6 ohm

R2 : 8 ohm

R3 : 12 ohm

Calculate the following:

va1 (V) :

RL2 (ohm) :

RL3 (ohm) :

Hint: Find the Thevenin model of the circuit (without RL) first

Find (and think about how to minimize your calculations)

1. The value of $v_a = v_{a1}$ when $R_L = 12\ \Omega$
2. The value of $R_L = R_{L2}$ that results in $v_a = 4$ V
3. The value of $R_L = R_{L3}$ that results in $i_a = 1$ A

Vs = 12 V

Is = 2 A

R1 = 6 ohm

R2 = 8 ohm

R3 = 12 ohm

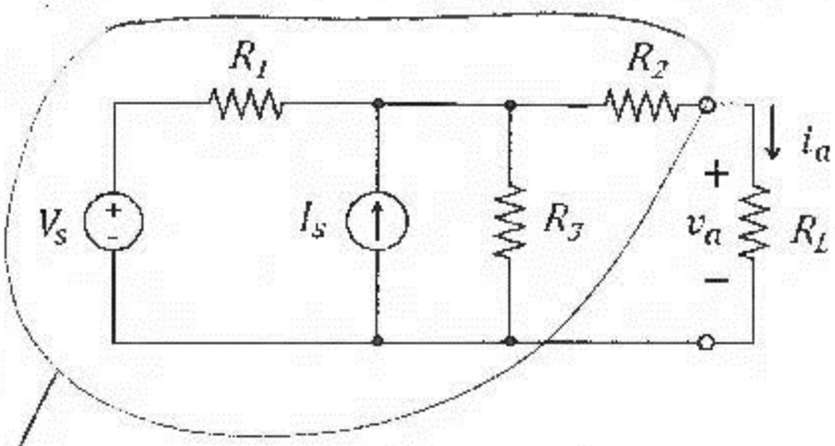

→ FIND THEVENIN MODEL

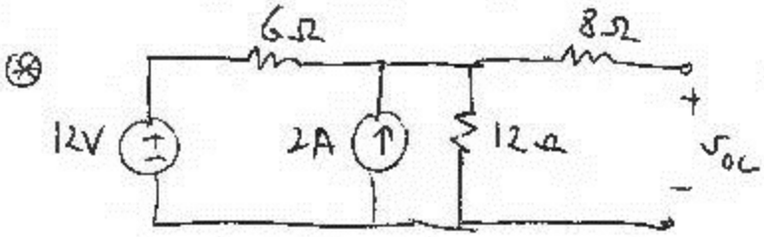

⇝ SUPERPOSITION

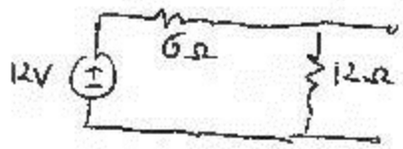

$v_{oc_1} = \frac{12}{\cancel{48}\,3} \cdot \cancel{12}^{\,2}$

$= 8V$

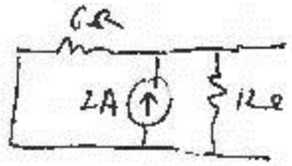

$v_{oc_2} = 2 \cdot (12 // 6)$

$= 2 \cdot 4$

$= 8V$

$\Rightarrow v_{oc} = 16\ V$

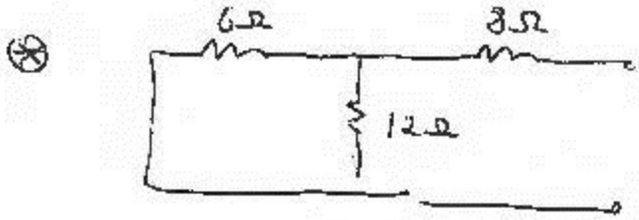

$R_{TH} = (6 // 12) + 8 = 4 + 8 = 12\ \Omega$

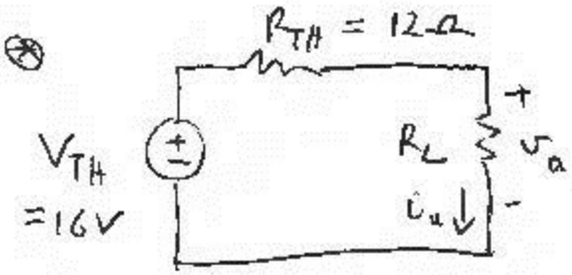

① $v_a = \frac{16 \cdot 12}{12 + 12} = \frac{16}{2} = 8$ $\boxed{v_a = 8V}$

② $v_a = 16 \cdot \frac{R_L}{R_L + 12} = 4 \Rightarrow 12 R_L = 4 \cdot 12$

$\Rightarrow \boxed{R_L = 4\Omega}$

③ $i_a = \frac{16}{R_L + 12} = 1 \Rightarrow \boxed{R_L = 4\Omega}$

Circuit theorems 011

Unlimited Attempts.

The circuit on the right was created by applying source transformations to the circuit on the left.

Find the values of V_a and R_a .

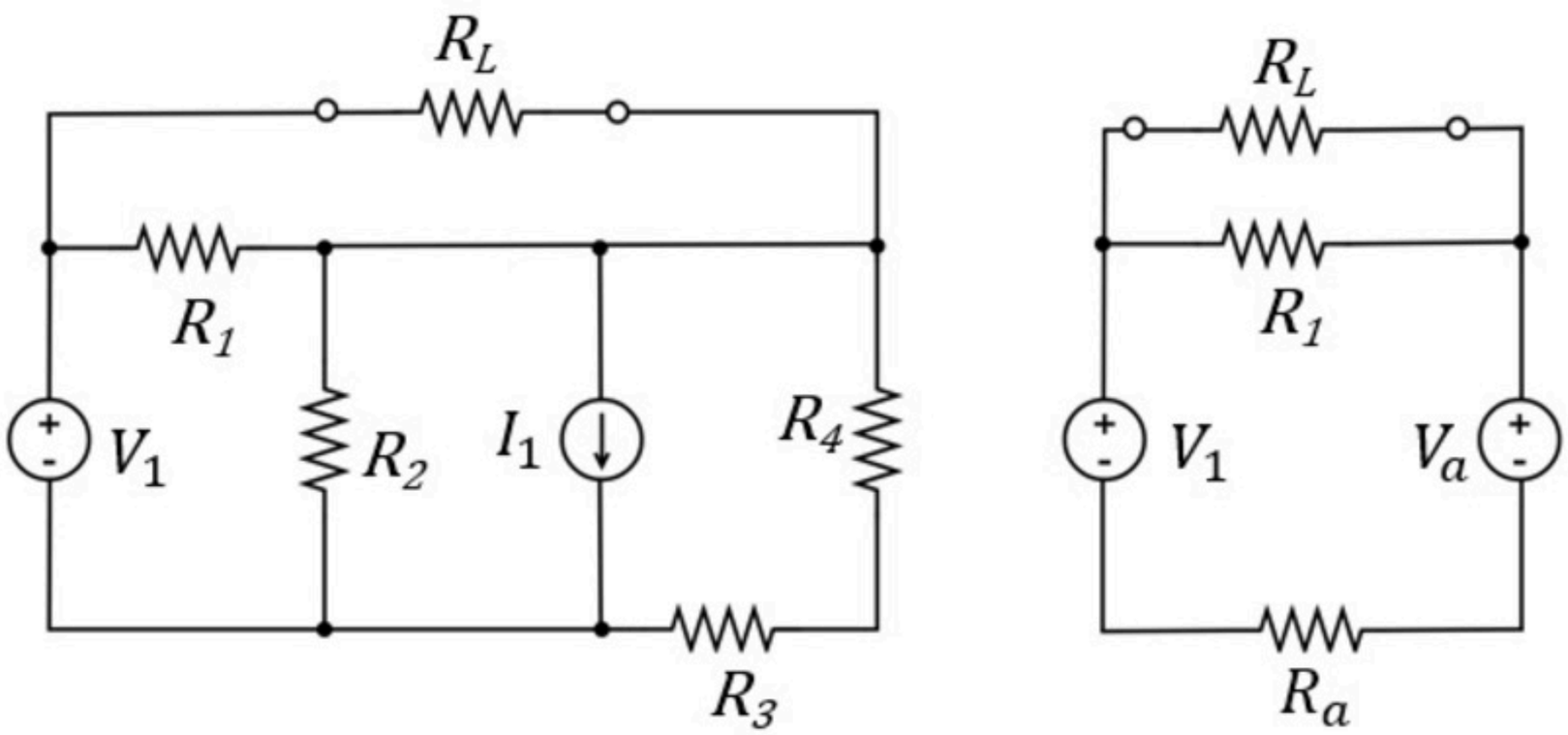

Given Variables:

V1 : 20 V

I1 : 2 A

R1 : 14 ohm

R2 : 6 ohm

R3 : 1 ohm

R4 : 11 ohm

Calculate the following:

Ra (ohm) :

Va (V) :

Hint: Make sure you use the correct transformations.

The circuit on the right was created by applying source transformations on the left circuit.

Find the values of V_a and R_a.

V1 = 17 V

I1 = 2 A

R1 = 22 ohm

R2 = 8 ohm

R3 = 12 ohm

R4 = 12 ohm

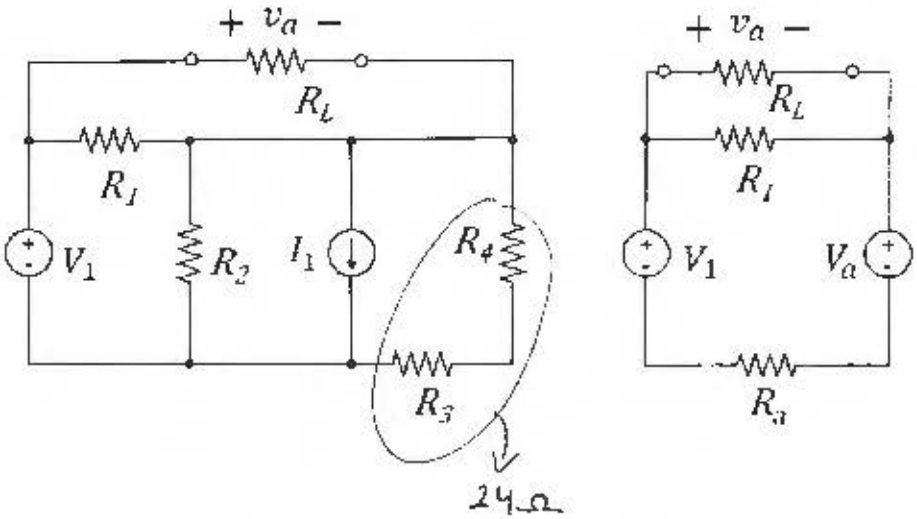

$$R_2 // 24 = \left(\frac{1}{8} + \frac{1}{24}\right)^{-1} = \left(\frac{3}{24} + \frac{1}{24}\right)^{-1} = 6\,\Omega$$

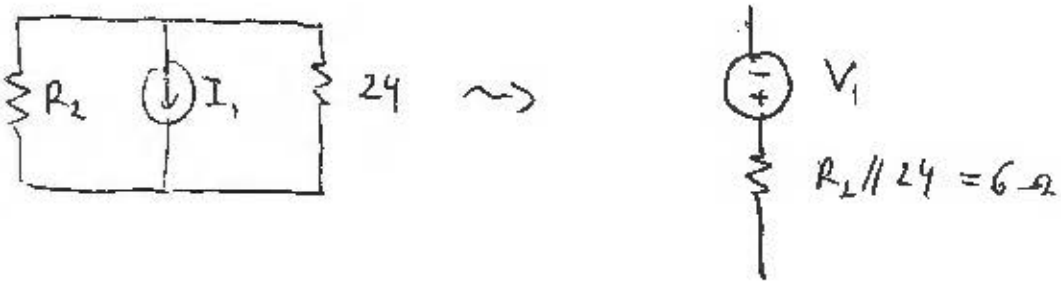

$$V_1 = I_1 \cdot (R_2 // 24) = 2 \cdot 6 = 12V$$

$$\boxed{V_a = -12V}$$

$$\boxed{R_a = 6\,\Omega}$$

Circuit theorems 013

No more attempts left.

Consider the circuit on the left. You are not given the values of V_S, I_S, R_1, R_2 or R_3.

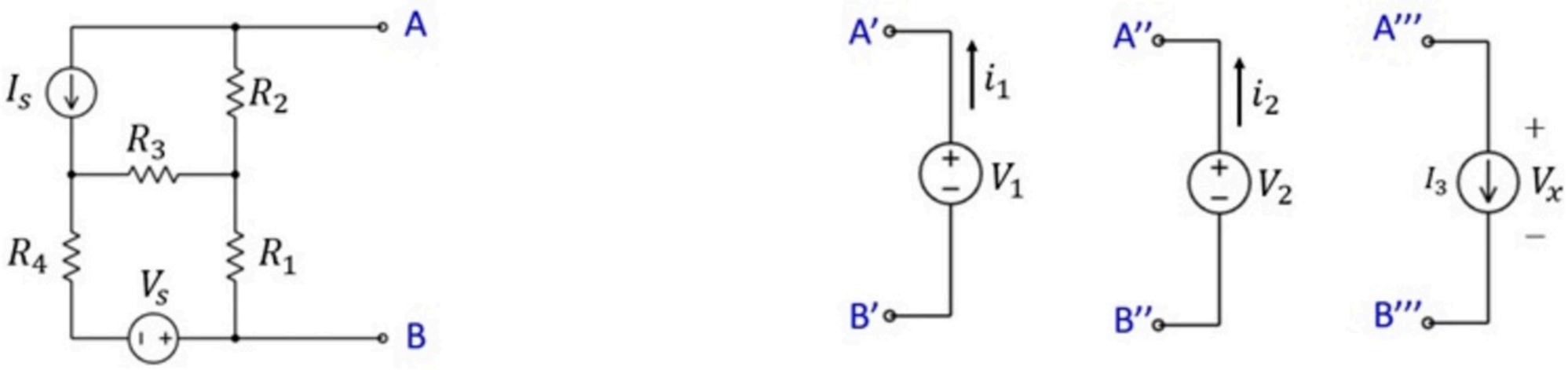

You are told the value of current i_1 if V_1 is attached to this circuit, with A connected to A' and B connected to B'.

You are also told the value of current i_2 if V_2 is attached, with A connected to A'' and B connected to B''. However, in this case, the independent sources were first turned off (i.e., $V_S = 0$ and $I_S = 0$).

Your task is to find V_x if current source I_3 is connected to the original circuit (i.e., with the independent sources V_S and I_S not turned off), with A connected to A''' and B connected to B'''.

Given Variables:

V1 : 6 V

i1 : 12 A

V2 : 12 V

i2 : 12 A

I3 : -7 A

R4 : 2 ohm

Calculate the following:

Vx (V) :

Hint: Redraw the circuit on the left as its Thevenin equivalent model

Consider the circuit on the left. You are not given the values of V_S, I_S, R_1, R_2 or R_3.

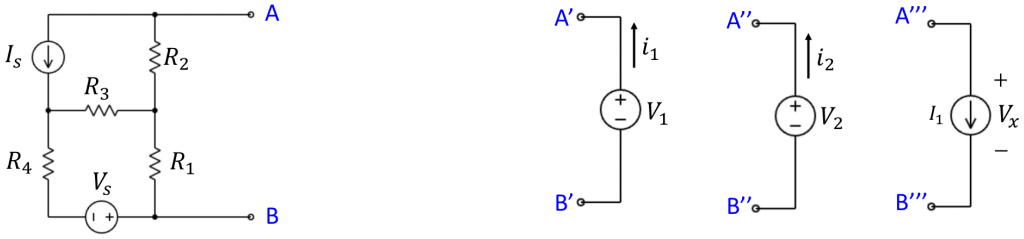

$V_1 = 15\ V$
$i_1 = 6\ A$
$V_2 = 10\ V$
$i_2 = 5\ A$
$I_1 = 5\ A$
$R_4 = 2\Omega$

You are told the value of current i_1 if V_1 is attached to this circuit, with A connected to A' and B connected to B'.

You are also told the value of current i_2 if V_2 is attached, with A connected to A'' and B connected to B''. However, in this case, the independent sources were first turned off (i.e., $V_S = 0$ and $I_S = 0$).

Your task is to find V_x if current source I_1 is connected to the original circuit (i.e., with the independent sources V_S and I_S not turned off), with A connected to A''' and B connected to B'''.

Represent the left circuit as its Thevenin equivalent circuit

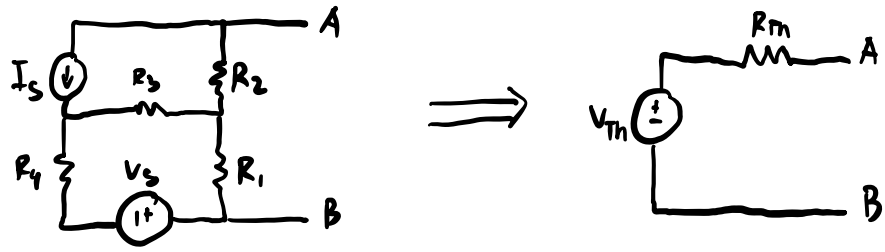

when $A \to A'$, $B \to B'$

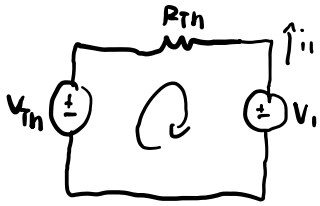

KVL: $-V_{Th} - i_1 R_{Th} + V_1 = 0$

$V_{Th} = V_1 - i_1 R_{Th}$

when $A \to A''$, $B \to B''$ and $V_S = 0$, $I_S = 0$

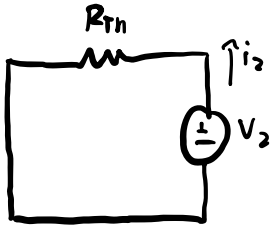

$R_{Th} = \frac{V_2}{i_2} = \frac{10}{5} = 2\Omega$

$V_{Th} = 15 - 6(2)$

$V_{Th} = 3V$

when $A \to A'''$, $B \to B'''$

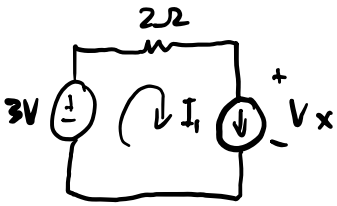

KVL: $-3 + 2I_1 + V_x = 0$

$V_x = 3 - 2(5)$

$\boxed{V_x = -7V}$

Circuit theorems 014

Problem has been graded.

The circuit on the right represent the Thevenin model of the circuit on the left. Find the value of V_{Th} and R_{Th}.

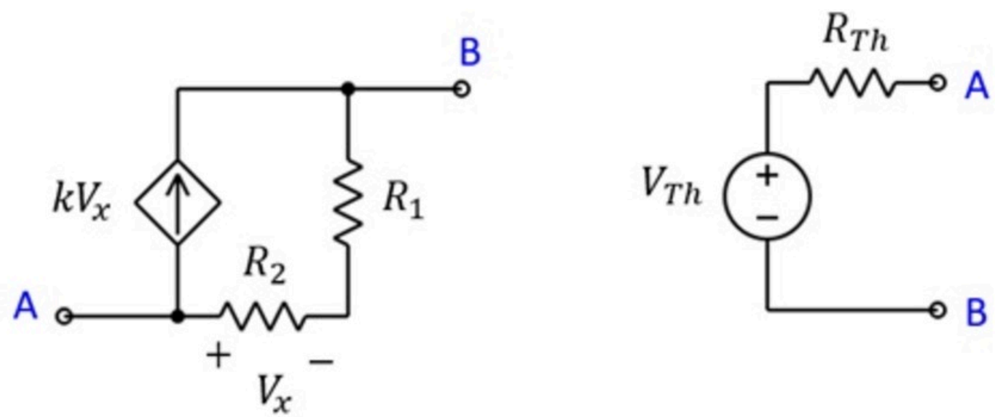

Given Variables:

R1 : 4 ohm

R2 : 2 ohm

k : -2 A/V

Calculate the following:

Vth (V) :

Rth (ohm) :

The circuit on the right represent the Thevenin model of the circuit on the left. Find the value of V_{Th} and R_{Th}.

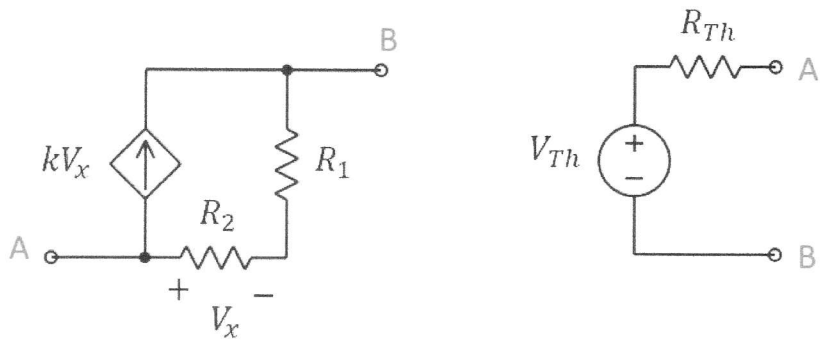

$R_1 = 4\,\Omega$

$R_2 = 2\,\Omega$

$k = -2\ \frac{A}{V}$

REDRAW:

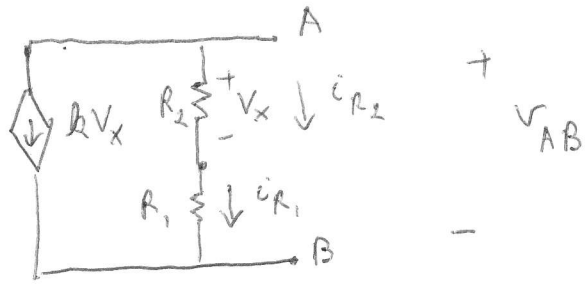

(a) LEAVE A-B OPEN: KCL: $kV_x + \frac{V_x}{R_2} = 0 \Rightarrow \left(k + \frac{1}{R_2}\right)V_x = 0 \Rightarrow V_x = 0$

$\Rightarrow i_{R_2} = i_{R_1} = 0\,A \Rightarrow v_{AB} = 0 \Rightarrow \boxed{V_{TH} = 0\,V}$

(b) FOR R_{TH}, APPLY TEST VOLTAGE

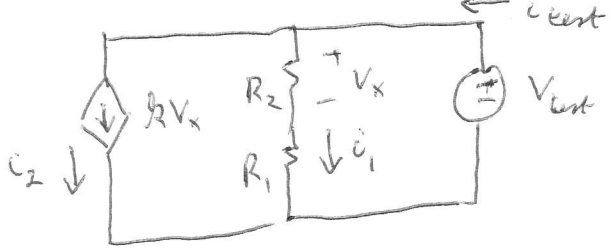

$i_1 = \frac{V_{test}}{R_1 + R_2}$

voltage divider

$i_2 = kV_x = k\,V_{test}\,\frac{R_2}{R_1 + R_2}$

$i_{test} = i_1 + i_2 = V_{test}\,\frac{(1 + kR_2)}{R_1 + R_2}$

$\Rightarrow R_{TH} = \frac{V_{test}}{i_{test}} = \frac{R_1 + R_2}{1 + kR_2} = \frac{4+2}{1+(-2)2} = \frac{6}{-3}$ $\boxed{R_{TH} = -2\,\Omega}$

Circuit theorems 015

Problem has been graded.

Consider the circuit below. You are not given the values of V_1, V_2 and I_2. However, you are told the values of the other components and that of V_x.

(a) What is the new value of V_x when all the source values (i.e., V_1, V_2, I_1 and I_2) are doubled? We will call this new value V_{x1}.

(b) What is the new value of V_x when only I_1 is doubled and the other sources are what they were originally? We will call this new value V_{x2}.

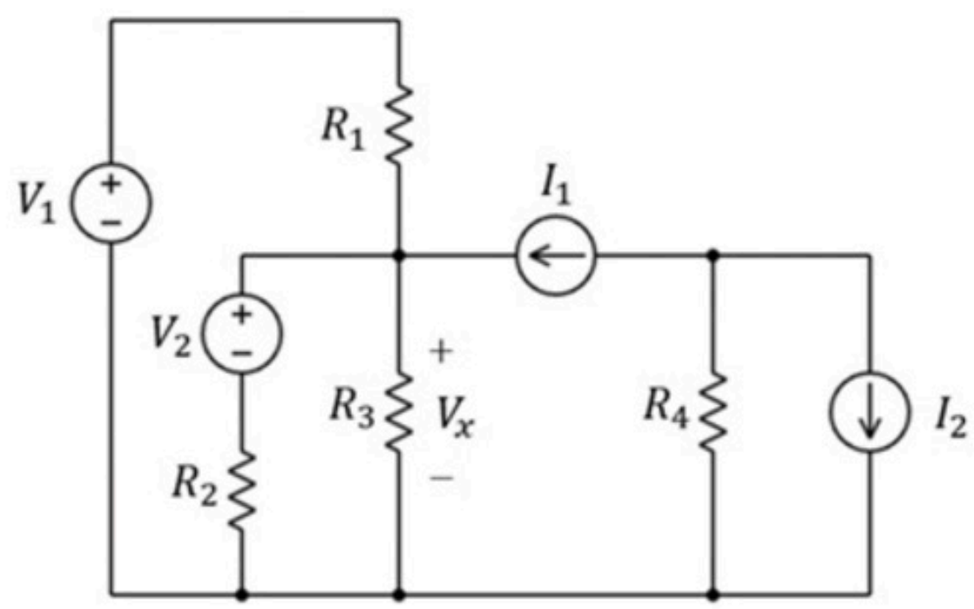

Given Variables:

R1 : 10 ohm

R2 : 10 ohm

R3 : 5 ohm

R4 : 7 ohm

I1 : 2 A

Vx : 16 V

Calculate the following:

Vx1 (V) :

Vx2 (V) :

Hint: Use linearity and superposition to express Vx as a linear combination of all sources

Consider the circuit below. You are not given the values of V_1, V_2 and I_2. However, you are told the values of the other components and that of V_x.

(a) What is the new value of V_x when all the source values (i.e., V_1, V_2, I_1 and I_2) are doubled? We will call this new value V_{x1}.

(b) What is the new value of V_x when only I_1 is doubled and the other sources are what they were originally? We will call this new value V_{x2}.

$R_1 = 15\Omega$
$R_2 = 5\Omega$
$R_3 = 15\Omega$
$R_4 = 7\Omega$
$I_1 = 2A$
$V_x = 15$

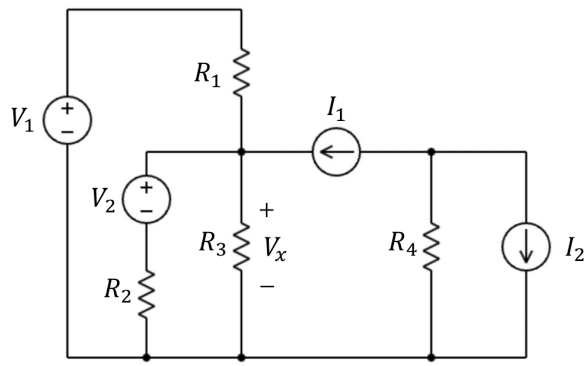

a. Generally,

$V_x = aV_1 + bV_2 + cI_1 + dI_2$ from linearity and superposition

If all sources are doubled,

$$V_{x1} = a(2V_1) + b(2V_2) + c(2I_1) + d(2I_2) = 2(aV_1 + bV_2 + cI_1 + dI_2)$$
$$= 2V_x$$
$$= 2 \cdot 15$$
$$\boxed{V_{x1} = 30V}$$

b. If only I_1 is doubled

$$V_{x2} = aV_1 + bV_2 + c(2I_1) + dI_2 = (aV_1 + bV_2 + cI_1 + dI_2) + cI_1$$
$$= V_x + cI_1$$

find the contribution of I_1 using superposition

when only I_1 is on,

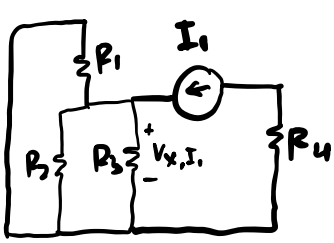

$$V_{x,I_1} = I_1 \underbrace{\left(\frac{R_1 // R_2}{R_1 // R_2 + R_3}\right) R_3}_{c}$$

$$V_{x,I_1} = 2\left(\frac{\frac{15}{4}}{\frac{15}{4} + 15}\right) 15$$
$$= 2\left(\frac{15}{15 + 60}\right) 15$$
$$= 2 \cdot \frac{1}{5} \cdot 15$$
$$= 6V \Rightarrow cI_1$$

$$V_{x2} = V_x + cI_1$$
$$= 15 + 6$$
$$\boxed{V_{x2} = 21V}$$

Circuit theorems 016

Problem has been graded.

Find the value of R_L such that the power received by R_L is maximized.

Find the corresponding max power received by R_L.

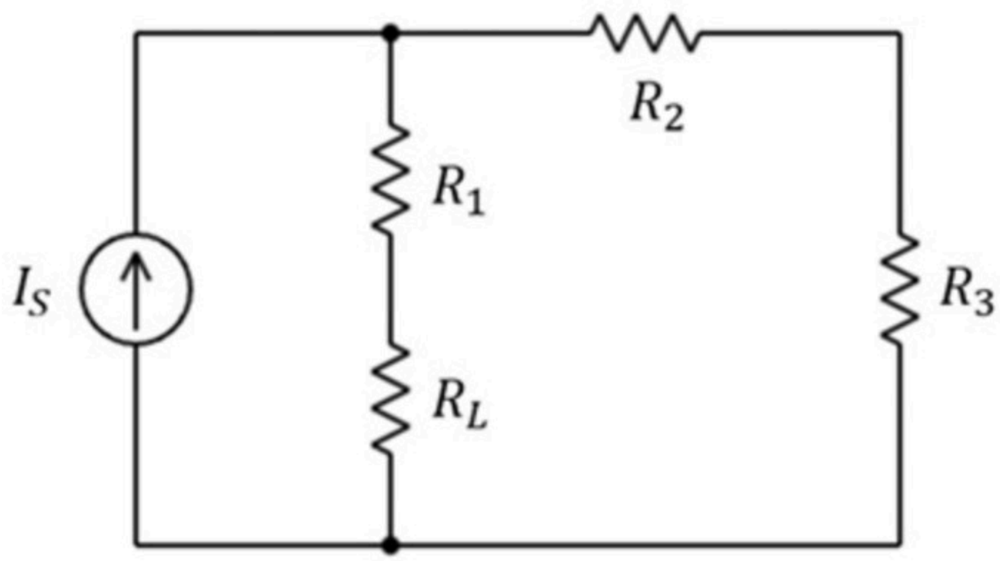

Given Variables:

Is : 2 A

R1 : 2 ohm

R2 : 1 ohm

R3 : 1 ohm

Calculate the following:

RL (ohm) :

Pmax (W) :

Hint: Find the Thevenin equivalent model of the circuit after taking out RL

Find the value of R_L such that the power received by R_L is maximized.

Find the corresponding max power received by R_L.

$I_S = 2A$
$R_1 = 12\Omega$
$R_2 = 2\Omega$
$R_3 = 2\Omega$

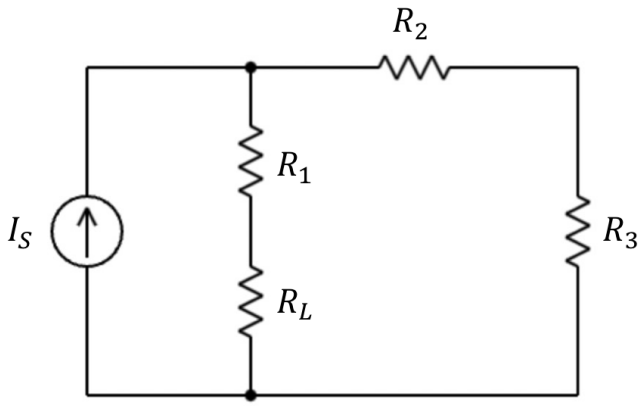

find R_{Th}

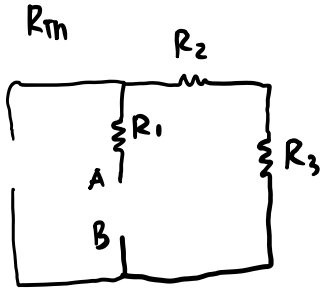

R_1, R_2, R_3 are in series

$R_{Th} = R_1 + R_2 + R_3$

$= 12 + 2 + 2$

$R_{Th} = 16\Omega$

find V_{Th}

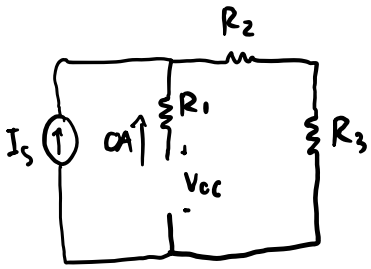

$V_{oc} = I_S \cdot (R_2 + R_3)$

$= 2 \cdot (2 + 2)$

$V_{oc} = 8V$

$$P_{max} = \frac{V_{Th}^2}{4 R_{Th}}$$

$$= \frac{8^2}{4(16)}$$

$$\boxed{P_{max} = 1\,W}$$

Circuit theorems 017

No more attempts left.

The box contains a linear circuit. This same circuit is placed into the three configurations shown below.

The reading of the ammeter in configuration 1 is given as X.

Find the current i_3 in configuration 3.

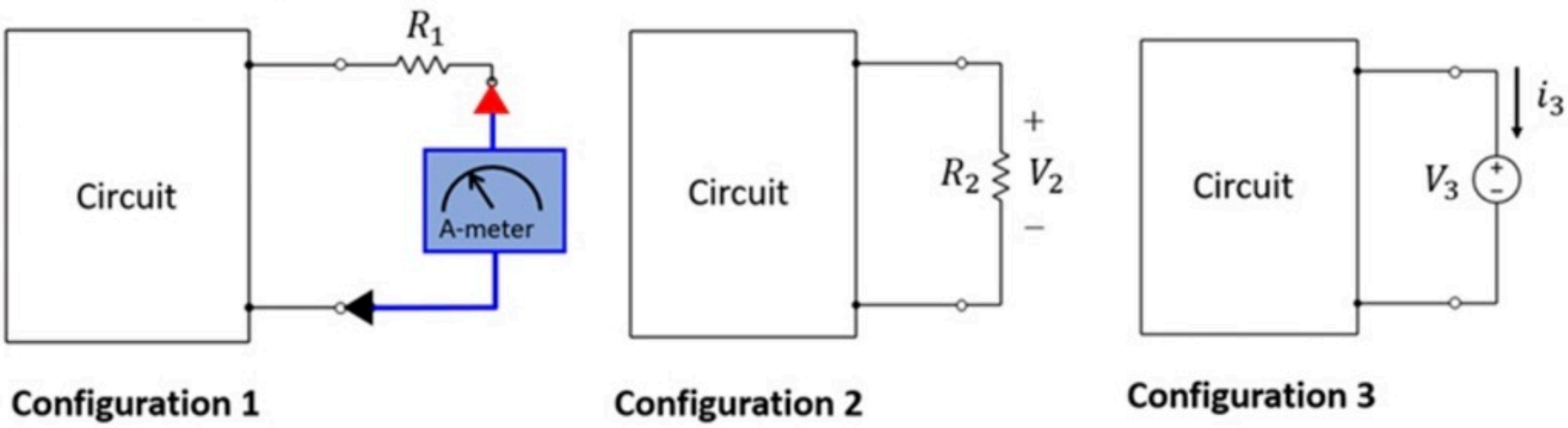

Given Variables:

X : 8 A

R1 : 1 ohm

V2 : 20 V

R2 : 10 ohm

V3 : 2 V

Calculate the following:

i3 (A) :

Hint: Replace the circuit in the box as its Thevenin equivalent model

The box contains a linear circuit. This same circuit is placed into the three configurations shown below.

The reading of the ammeter in configuration 1 is given as X.

Find the current i_3 in configuration 3.

$X = 8A$

$R_1 = 1\Omega$

$V_2 = 16V$

$R_2 = 4\Omega$

$V_3 = 8V$

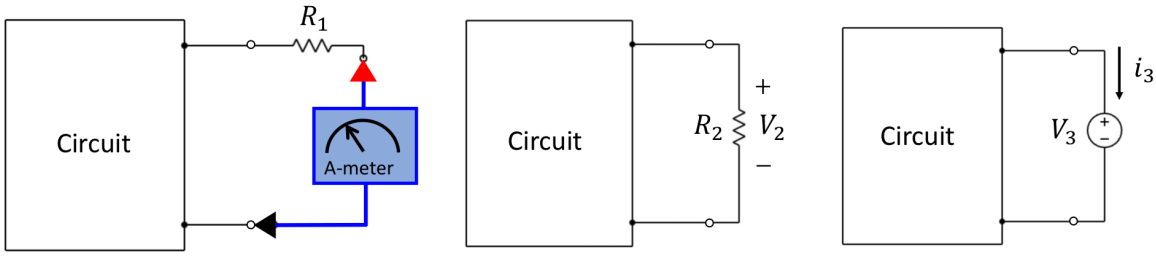

Configuration 1 **Configuration 2** **Configuration 3**

Replace the box by its Thevenin equivalent model

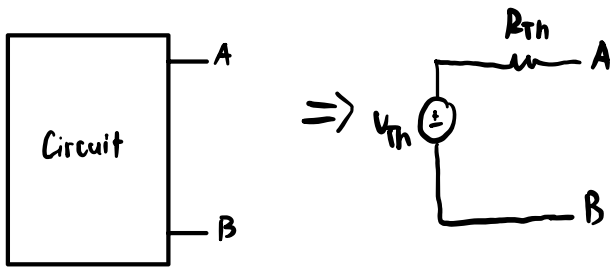

Configuration 1

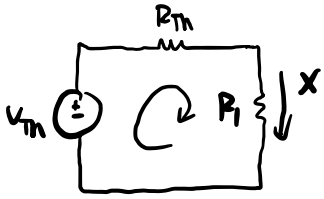

KVL 1: $-V_{Th} + XR_{Th} + XR_1 = 0$

$-V_{Th} + 8R_{Th} + 8 \cdot 1 = 0$

$-V_{Th} + 8R_{Th} = -8$ (1)

Configuration 2

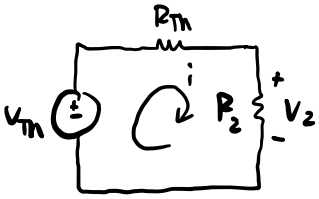

$i = \frac{V_2}{R_2}$

KVL 2: $-V_{Th} + iR_{Th} + V_2 = 0$

$-V_{Th} + \frac{V_2}{R_2} R_{Th} = -V_2$

$-V_{Th} + \frac{16}{4} R_{Th} = -16$

$-V_{Th} + 4R_{Th} = -16$ (2)

Configuration 3

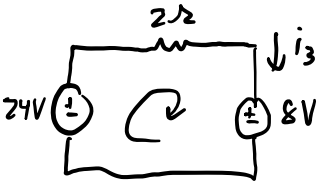

KVL 3: $-24 + 2i_3 + 8 = 0$

$2i_3 = 16$

$\boxed{i_3 = 8A}$

Solve system of equations

(1): $-V_{Th} = -8 - 8R_{Th}$

$V_{Th} = 8 + 8R_{Th}$

(1) → (2): $-(8 + 8R_{Th}) + 4R_{Th} = -16$

$-8 - 8R_{Th} + 4R_{Th} = -16$

$-4R_{Th} = -8$

$R_{Th} = 2\Omega$

R_{Th} → (1): $V_{Th} = 8 + 8(2)$

$V_{Th} = 24V$

PP Circuit theorems 001

Unlimited Attempts.

When $V_S = 3$ V and $I_S = -2$ mA, you measure $I = 5$ mA.

When $V_S = 2$ V and $I_S = 0$ mA, you measure $I = 6$ mA.

When $V_S = 1$ V and $I_S = 3$ mA, what will I be?

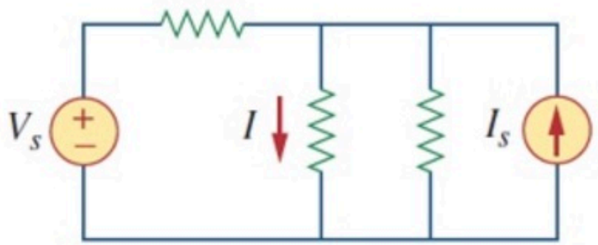

Given Variables:

. : . .

Calculate the following:

I (A) :

0.009

Hint: Check the units

PP Circuit theorems 002

Unlimited Attempts.

You build the circuit below and use an ammeter to measure the current through the unknown resistor. The ammeter reading is 0.1 A.

Now someone changes the voltage source from 15V to 30V, but leaves everything else unchanged. What will be the new reading X of the ammeter?

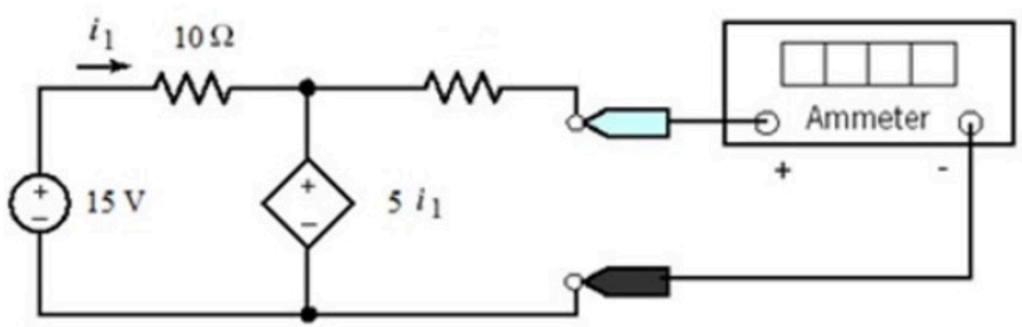

Given Variables:

. : . .

Calculate the following:

X (A) :

0.2

Hint: Is the system linear? What does that mean in terms of input - output?

PP Circuit theorems 003

Unlimited Attempts.

Find the current i_o.

What voltage X do we need to change the 60 V voltage source to in order to make i_o = 7.5 A ?

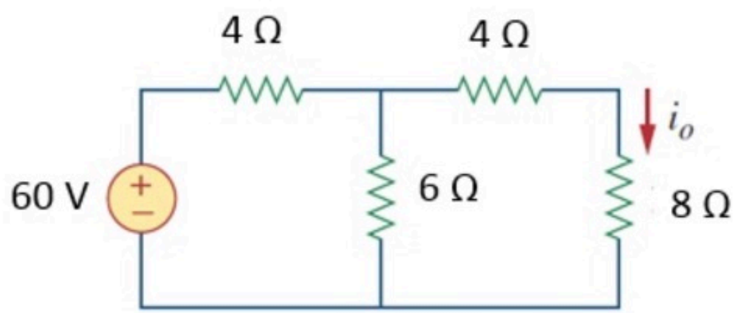

Given Variables:

. : . .

Calculate the following:

io (A) :

2.5 ✓

X (V) :

180 ✓

Hint: To find X, use linearity.

PP Circuit theorems 004

Unlimited Attempts.

Use superposition to find v_o.

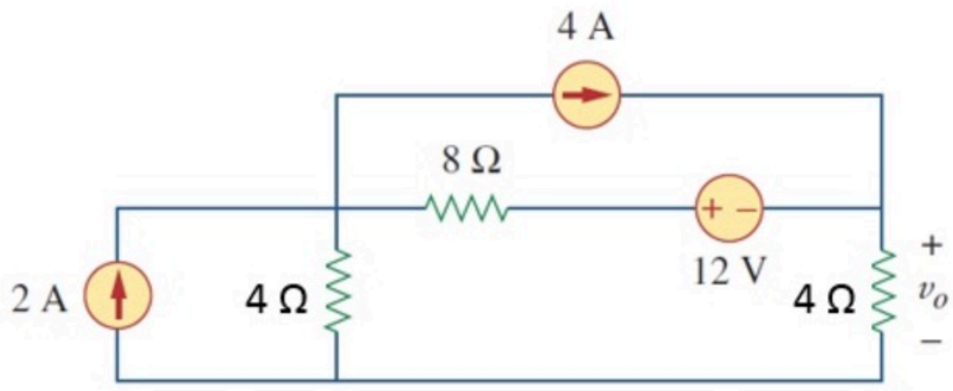

Given Variables:

. : . .

Calculate the following:

vo (V) :

7

Hint: Mind the signs.

PP Circuit theorems 005

Unlimited Attempts.

Use superposition to find V_{ab}.

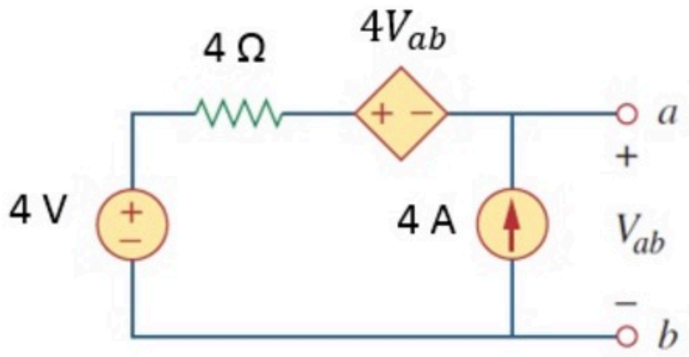

Given Variables:

. : . .

Calculate the following:

Vab (V) :

4

Hint: Always keep the dependent source.

PP Circuit theorems 006

Unlimited Attempts.

Use source transformations to find i.

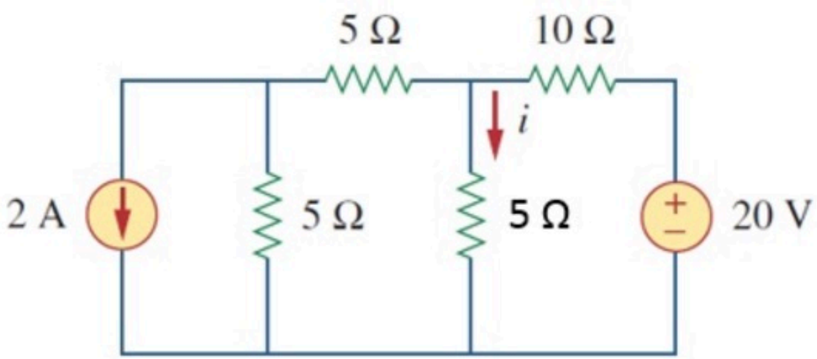

Given Variables:

. : . .

Calculate the following:

i (A) :

0.5

Hint: Make sure you use the correct transformations.

PP Circuit theorems 007

Unlimited Attempts.

Find the Norton equivalent model of this circuit, as seen between a and b.

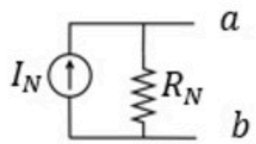

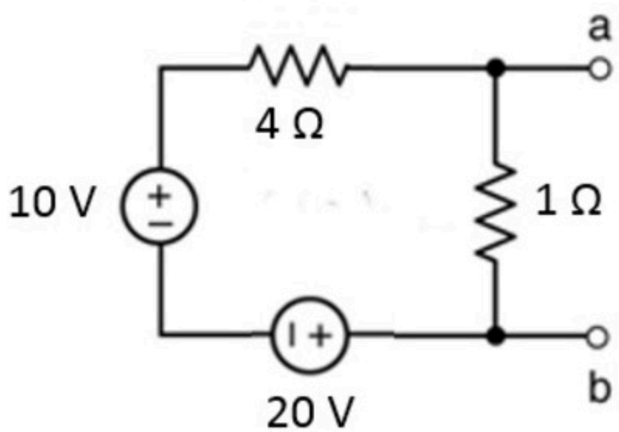

Given Variables:

. : . .

Calculate the following:

RN (ohm) :

0.8 ✓

IN (A) :

-2.5 ✓

Hint: Try finding RN directly. Mind the sign of IN.

PP Circuit theorems 008

Unlimited Attempts.

Find the Thevenin equivalent model of this circuit, as seen between a and b.

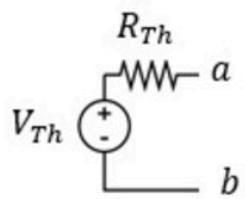

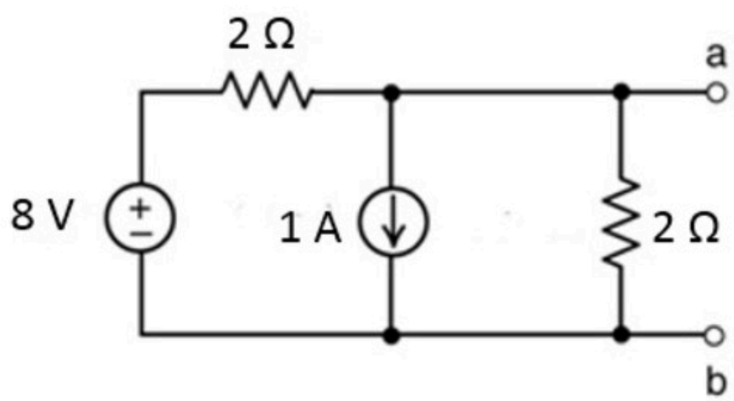

Given Variables:

. : . .

Calculate the following:

Vth (V) :

3 ✓

Rth (ohm) :

1 ✓

Hint: Try finding Rth directly. Find Voc with superposition.

PP Circuit theorems 009

Unlimited Attempts.

Find the Thevenin equivalent model of this circuit, as seen between a and b.

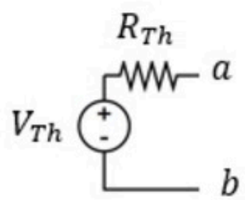

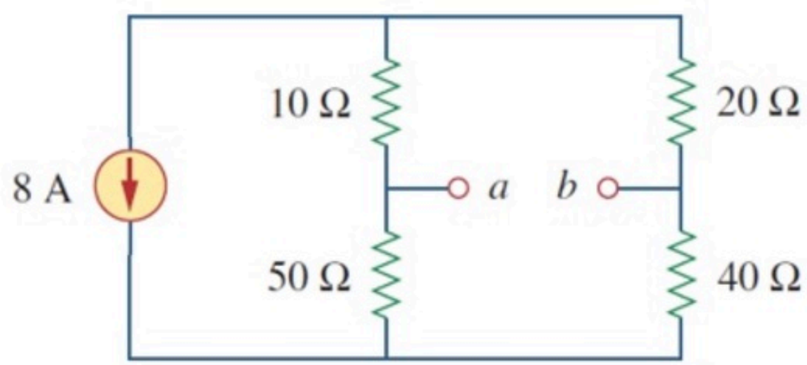

Given Variables:

. : . .

Calculate the following:

Vth (V) :

-40 ✓

Rth (ohm) :

22.5 ✓

Hint: Find Voc using current dividers.

PP Circuit theorems 010

Unlimited Attempts.

Find the Norton equivalent model of this circuit, as seen between a and b.

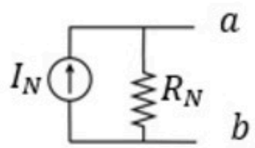

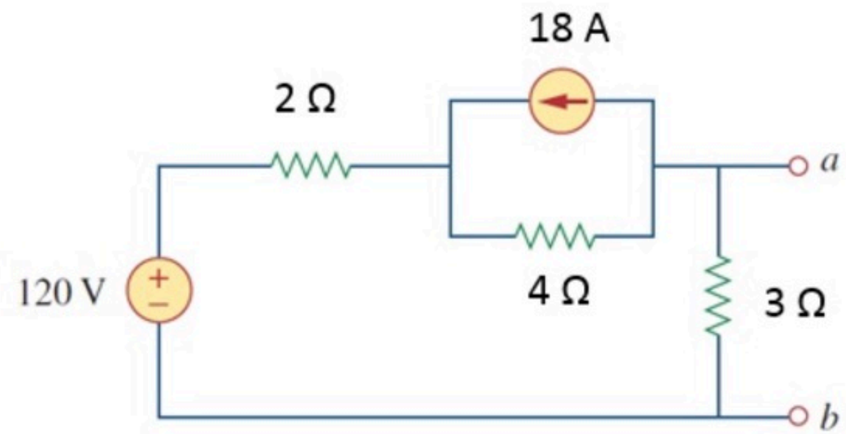

Given Variables:

. : . .

Calculate the following:

IN (A) :

8 ✓

RN (ohm) :

2 ✓

Hint: You can find Isc using superposition.

PP Circuit theorems 011

Unlimited Attempts.

Find the Thevenin equivalent model of this circuit, as seen between a and b.

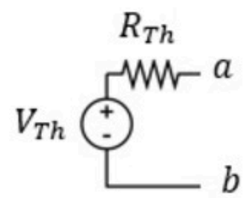

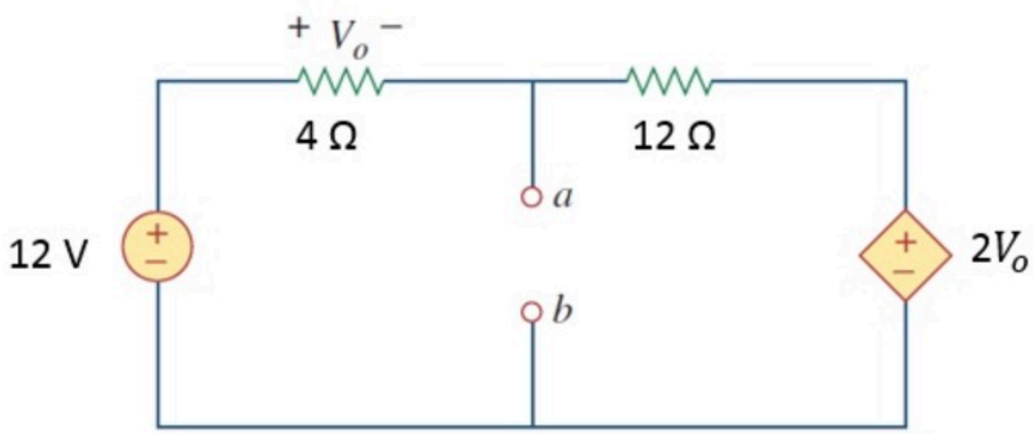

Given Variables:

. : . .

Calculate the following:

Vth (V) :

10 ✓

Rth (ohm) :

2 ✓

Hint: Find Voc; and then Isc or use a test source to find Rth.

PP Circuit theorems 012

Unlimited Attempts.

Find the Thevenin equivalent model of this circuit, as seen between a and b.

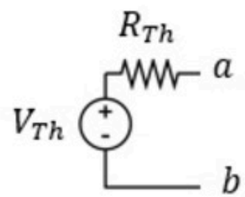

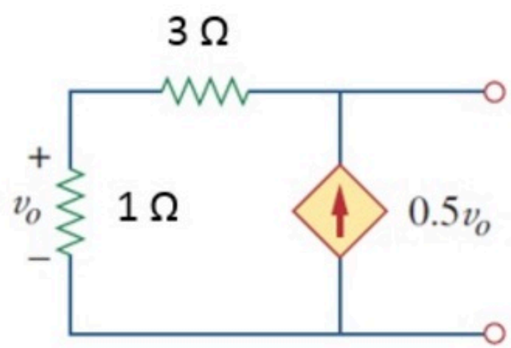

Given Variables:

. : . .

Calculate the following:

Vth (V) :

0 ✓

Rth (ohm) :

8 ✓

Hint: What do you expect Vth to be? Use test source for Rth.

PP Circuit theorems 013

Unlimited Attempts.

Find the Thevenin equivalent resistance of this circuit, as seen between a and b.

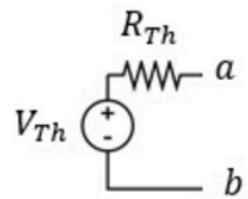

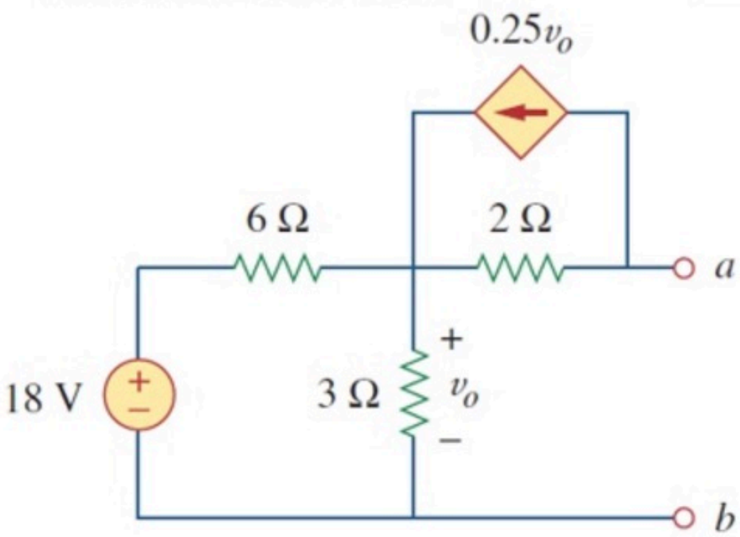

Given Variables:

. : . .

Calculate the following:

Rth (ohm) :

3

Hint: Try using a test source. Would you use a voltage or current test source?

PP Circuit theorems 014

Unlimited Attempts.

What resistor *R* connected between a and b will absorb maximum power? What is this power *P*? [Do not look up the equation for power.]

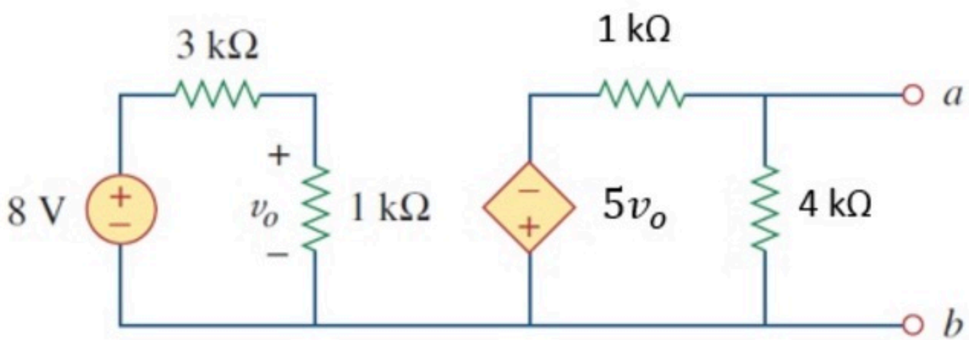

Given Variables:

. : . .

Calculate the following:

R (ohm) :

800 ✓

P (mW) :

20 ✓

Hint: Find the Thevenin model first.

PP Circuit theorems 015

Unlimited Attempts.

What is the maximum power *P* that can be delivered to the variable resistor *R*? [Do not look up the equation for power.]

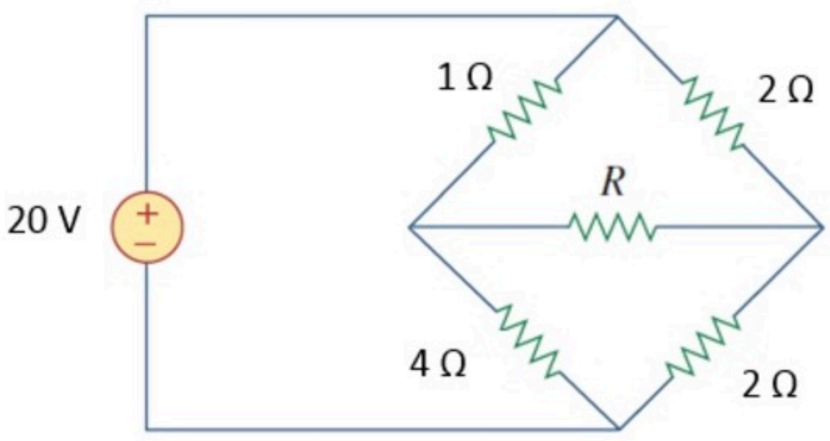

Given Variables:

. : . .

Calculate the following:

P (W) :

5

PP Circuit theorems 016

Unlimited Attempts.

Find R such that the maximum power delivered to the load is 12 mW.
[Do not look up the equation for power.]

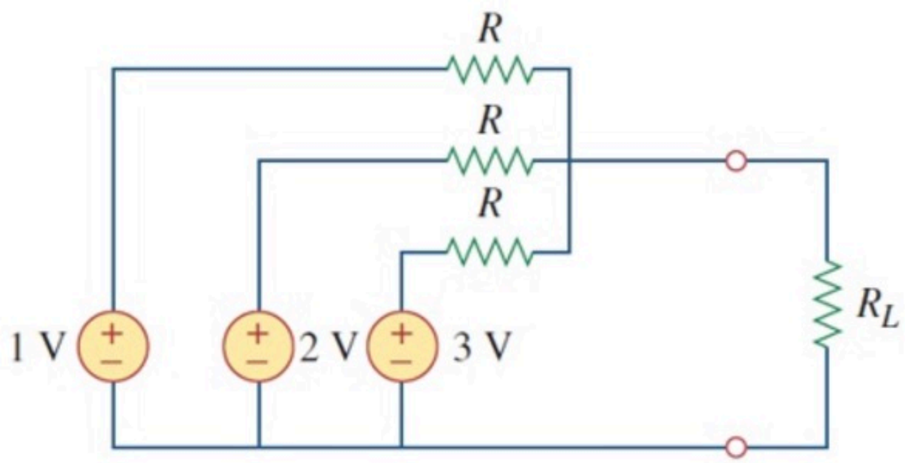

Given Variables:

. : . .

Calculate the following:

R (ohm) :

250 ✓

Hint: Find the Thevenin model first.

PP Circuit theorems 017

Unlimited Attempts.

Find the Thevenin equivalent model of this circuit, as seen between a and b.

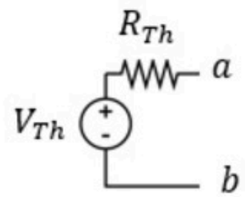

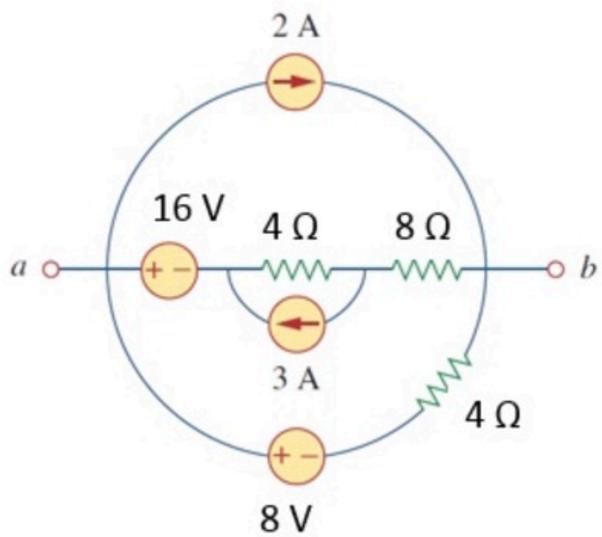

Given Variables:

. : . .

Calculate the following:

Vth (V) :

7 ✓

Rth (ohm) :

3 ✓

Hint: Use superposition to find Voc.

PP Circuit theorems 018

Unlimited Attempts.

Find the Norton equivalent model of this circuit, as seen between a and b.

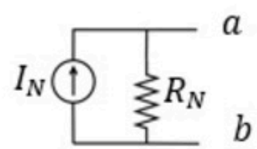

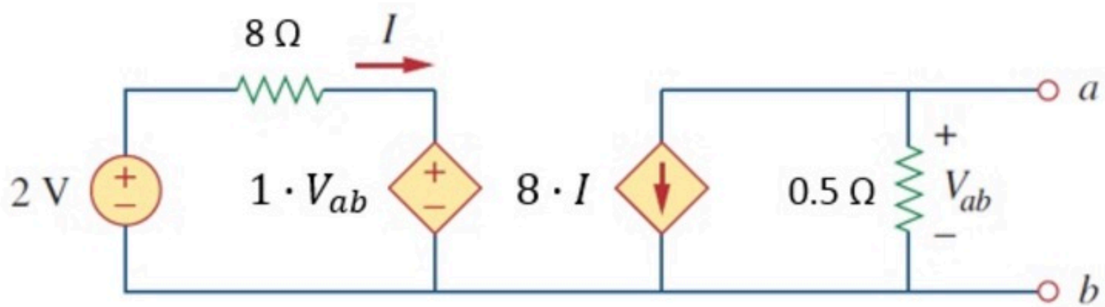

Given Variables:

. : . .

Calculate the following:

IN (A) :

-2 ✓

RN (ohm) :

1 ✓

Hint: Find Isc and Voc

PP Circuit theorems 019

Unlimited Attempts.

Find the Norton equivalent model of this circuit, as seen between b and c.

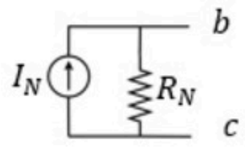

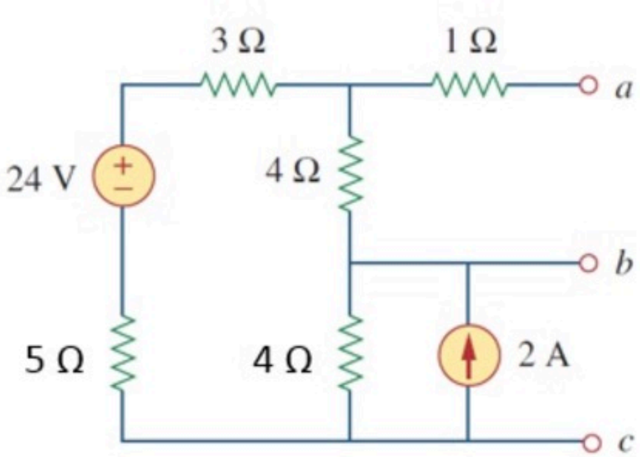

Given Variables:

. : . .

Calculate the following:

IN (A) :

4 ✓

RN (ohm) :

3 ✓

Hint: Does the 1 ohm resistor impact your calculations?

PP Circuit theorems 020

Unlimited Attempts.

Find the Norton equivalent model of this circuit, as seen between a and b. [Hint: if you have difficult numbers, try to use different tests]

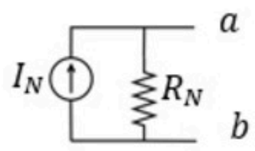

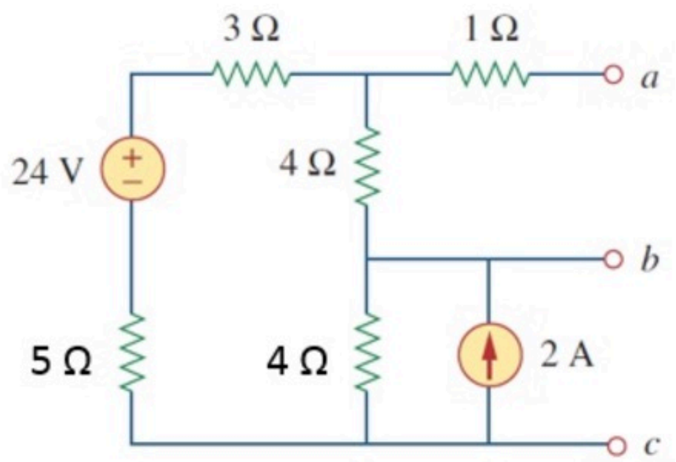

Given Variables:

. : . .

Calculate the following:

IN (A) :

1 ✓

RN (ohm) :

4 ✓

Hint: Can you plug in the 1 ohm resistor afterwards?

PP Circuit theorems 021

Unlimited Attempts.

Find the Thevenin equivalent model of this circuit, as seen between a and b.

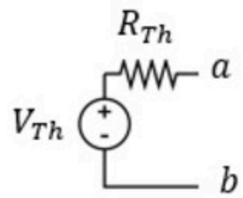

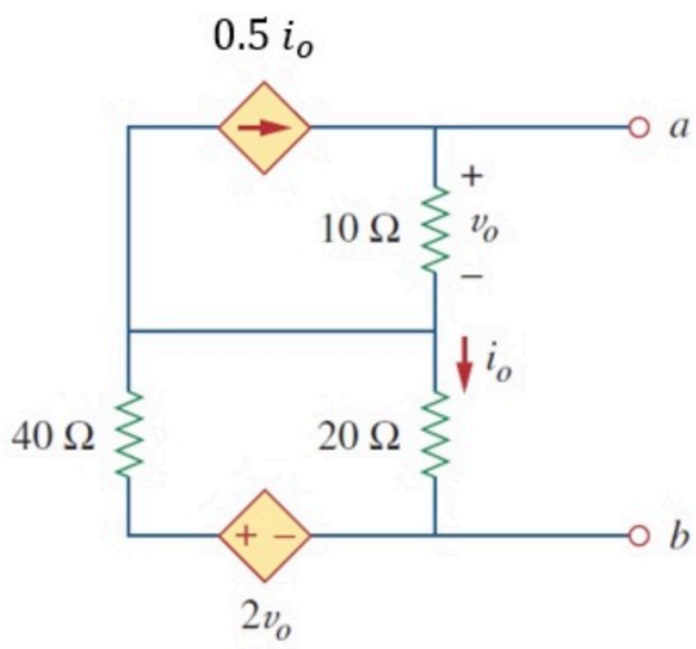

Given Variables:

. : . .

Calculate the following:

Vth (V) :

0 ✓

Rth (ohm) :

40 ✓

Hint: Use a test source to find Rth.

PP Circuit theorems 022

Unlimited Attempts.

Find the Thevenin equivalent model of this circuit, as seen between a and b.

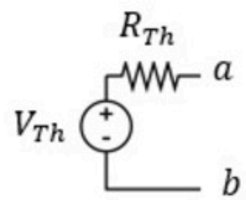

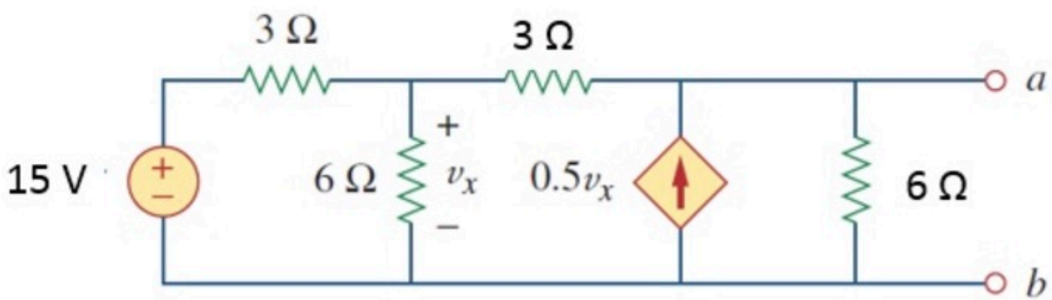

Given Variables:

. : . .

Calculate the following:

Vth (V) :

30 ✓

Rth (ohm) :

6 ✓

Hint: Find Isc and Voc.

Capacitors Inductors 001

Problem has been graded.

You are given a capacitor with a capacitance C_1. At time $t = 0$, the voltage across this capacitor is V_o.

If a constant current I_1 flows through the capacitor, how long will the capacitor take to charge up to a charge of 10 nC?

Given Variables:

C1 : 8 nF

Vo : 1 V

I1 : 2 mA

Calculate the following:

t (us) :

You are given a capacitor with a capacitance C_1. At time $t = 0$, the voltage across this capacitor is V_o.

If a constant current I_1 flows through the capacitor, how long will the capacitor take to charge up to a charge of 10 nC?

C1 = 2 nF

Vo = 3 V

I1 = 2 mA

$$V_0 = 3\,V \qquad Q = C \cdot V$$

$$V_{END} = \frac{Q_{END}}{C_1} = \frac{10 \cdot 10^{-9}}{2 \cdot 10^{-9}} = 5\,V$$

$$i = C \frac{dv}{dt}$$

$$\Downarrow$$

$$V_{END} = V_0 + \frac{1}{C} \int_{t_0}^{t} I_1 \, dt = V_0 + \frac{I_1}{C} \cdot t$$

$$t = (V_{END} - V_0) \cdot \frac{C}{I_1} = (5-3) \cdot \frac{2 \cdot 10^{-9}}{2 \cdot 10^{-3}}$$

$$t = 2 \cdot 10^{-6}\,s$$

$$\boxed{t = 2\,\mu s}$$

Capacitors Inductors 002

Problem has been graded.

Given C_{eq} between points A and B, what is C_a?

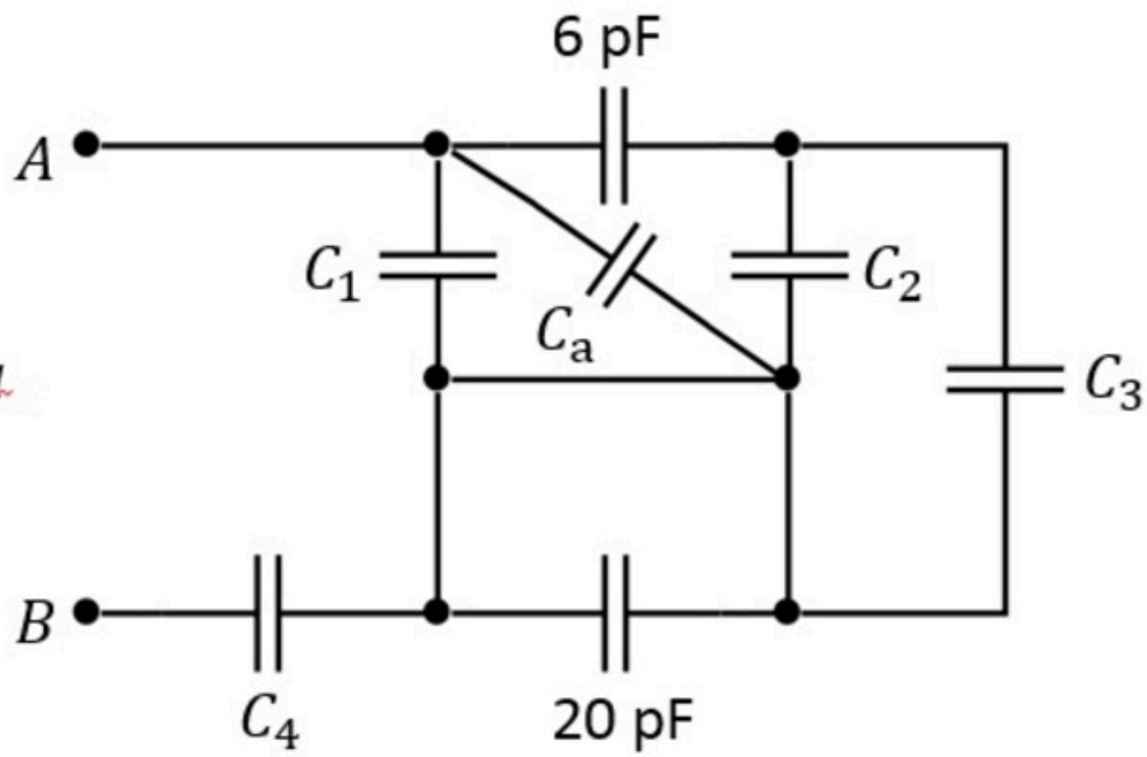

Given Variables:

C1 : 2 pF

C2 : 2 pF

C3 : 4 pF

C4 : 6 pF

Ceq : 3 pF

Calculate the following:

Ca (pF) :

Given C_{eq} between points A and B, what is C_a?

C1 = 4 pF

C2 = 5 pF

C3 = 1 pF

C4 = 10 pF

Ceq = 5 pF

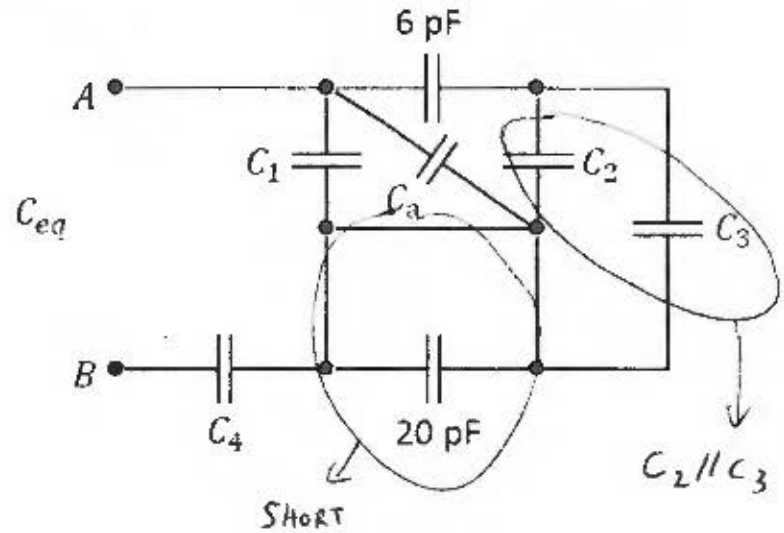

$C_2 // C_3 = C_2 + C_3 = 6\ pF$

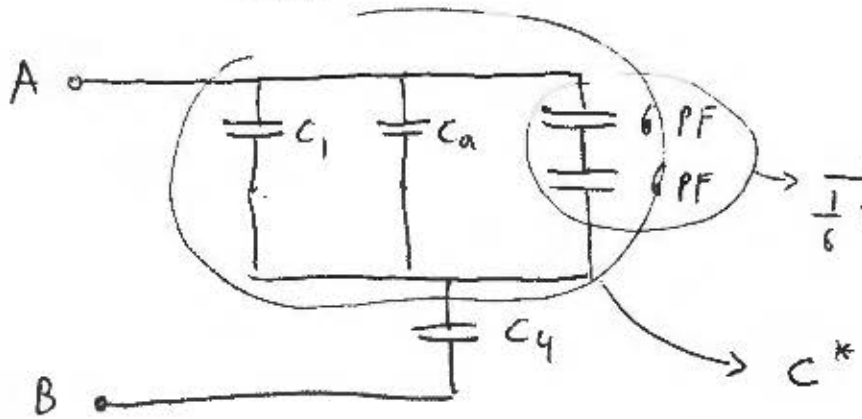

$$\frac{1}{\frac{1}{6}+\frac{1}{6}} = \frac{1}{\frac{1}{3}} = 3\ pF$$

$$\frac{1}{C_{eq}} = \frac{1}{C_4} + \frac{1}{C^*} \Rightarrow \frac{1}{C^*} = \frac{1}{5} - \frac{1}{10} = \frac{1}{10} \Rightarrow C^* = 10\ pF$$

$$C^* = C_1 + C_a + 3 \Rightarrow C_a = 10 - 4 - 3 = 3\ pF$$

$$\boxed{C_a = 3\ pF}$$

Capacitors Inductors 003

Problem has been graded.

Given the two plots of the voltage and current of the capacitor.
Find the values of a and b labeled on the graph.

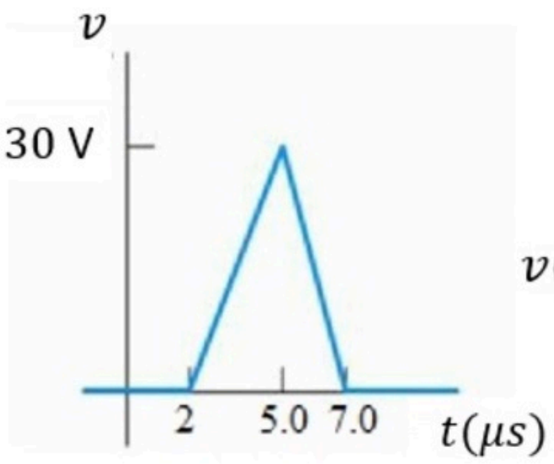

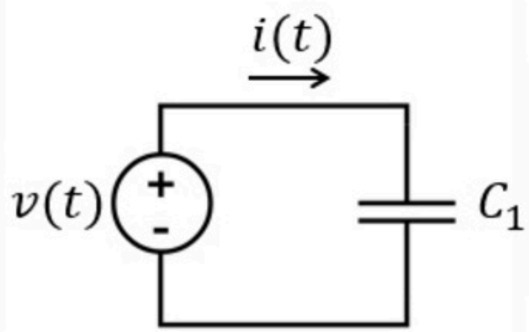

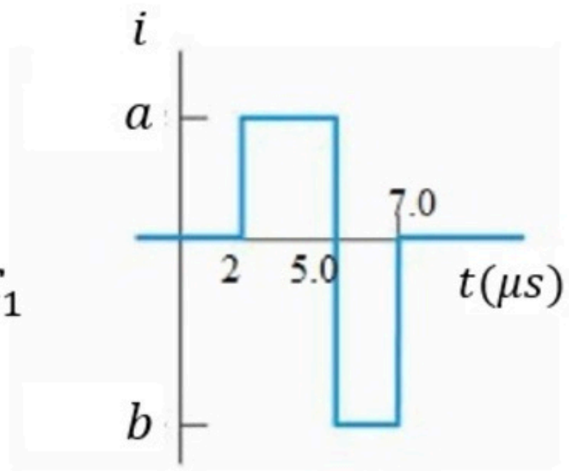

Given Variables:

C1 : 8 nF

Calculate the following:

a (A) :

0.08 ✓

b (A) :

-0.12 ✓

Given the two plots of the voltage and current of the capacitor. C1 = 1 nF
Find the values of a and b labeled on the graph.

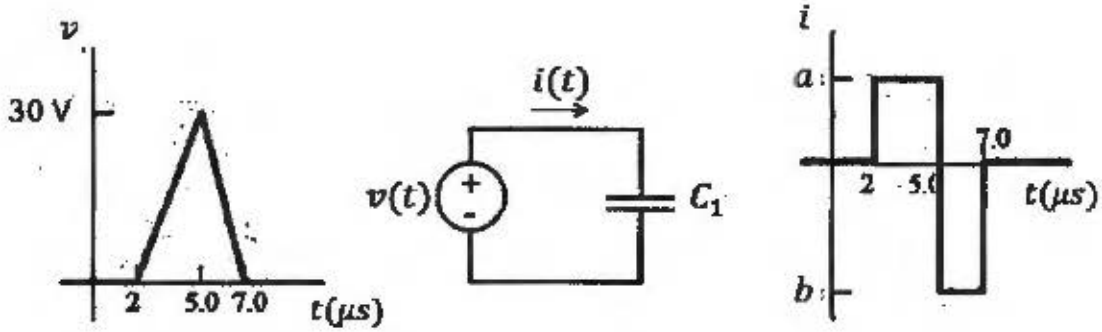

$$i = C\frac{dv}{dt}$$

⊗ FOR $2\,\mu s < t < 5\,\mu s$ $\quad \frac{dv}{dt} = \frac{\Delta v}{\Delta t} = \frac{30\,V}{3 \cdot 10^{-6}\,s}$

$$i = 10^{-9} \cdot \frac{30}{3 \cdot 10^{-6}} = 10 \cdot 10^{-3} = 0.01 \qquad \boxed{a = 0.01\ A}$$

⊗ FOR $5\,\mu s < t < 7\,\mu s$ $\quad \frac{dv}{dt} = \frac{\Delta v}{\Delta t} = \frac{-30\,V}{2 \cdot 10^{-6}\,s}$

$$i = 10^{-9}\,\frac{(-30)}{2 \cdot 10^{-6}} = -15 \cdot 10^{-3} = -0.015$$

$$\boxed{b = -0.015\ A}$$

Capacitors Inductors 004

Problem has been graded.

Find the current $i(t)$ in the circuit, when $i(0) = 1$ A and the voltage is as shown in the graph.

$i(t) = a_1 t + a_2$ for 0 s < t < 1 s

$i(t) = a_3 t + a_4$ for 1 s < t < 4 s

$i(t) = a_5 t + a_6$ for 4 s < t < 9 s

$i(t) = a_7 t + a_8$ for 9 s < t

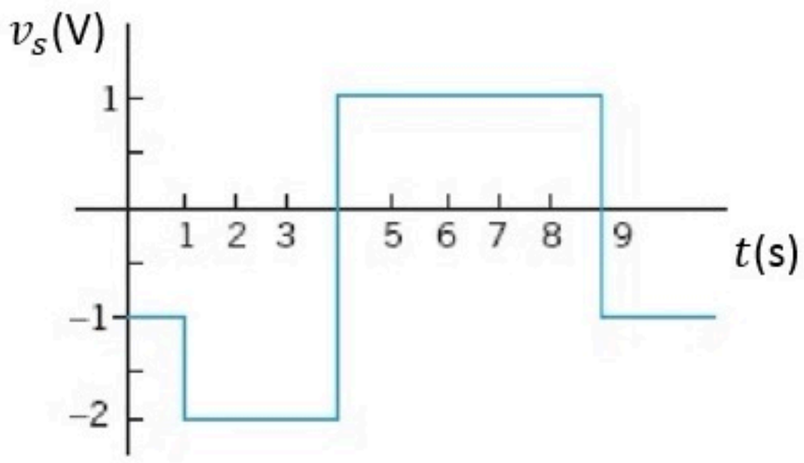

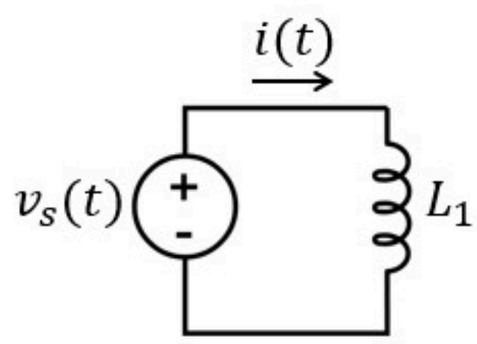

Given Variables:

L1 : 0.2 H

Calculate the following:

a1 (A/s) :

-5 ✓

a2 (A) :

1 ✓

a3 (A/s) :

-10 ✓

a4 (A) :

6 ✓

a5 (A/s) :

5 ✓

a6 (A) :

-54 ✓

a7 (A/s) :

-5 ✓

a8 (A) :

36 ✓

Hint: Make sure your offsets of the line segments are correct

Find the current $i(t)$ in the circuit, when $i(0) = 1$ A and the voltage is as shown in the graph.

L1 = 0.1 H

(a) $i(t) = a_1 t + a_2$ for $0\,s < t < 1\,s$

(b) $i(t) = a_3 t + a_4$ for $1\,s < t < 4\,s$

(c) $i(t) = a_5 t + a_6$ for $4\,s < t < 9\,s$

(d) $i(t) = a_7 t + a_8$ for $9\,s < t$

$$v_s = L\frac{di}{dt}$$

$$i(t) = i(t_0) + \frac{1}{L}\int_{t_0}^{t} v_s(u)\,du$$

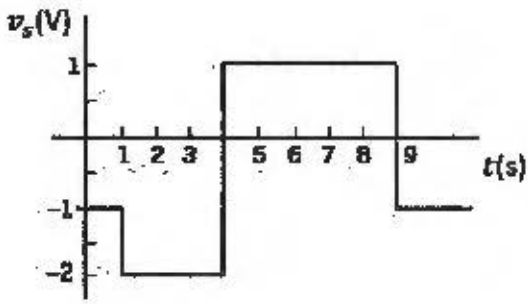

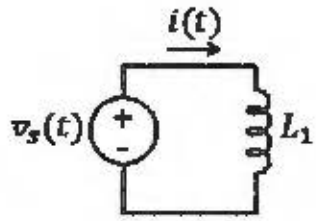

(a) $t_0 = 0\,s$: $i(t) = 1 + \frac{1}{0.1}\int_0^t (-1)\,du = 1 - 10t$

$a_1 = -10\ A/s$

$a_2 = 1\,A$

at $t = 1\,s$: $i(1) = 1 - 10 \cdot 1 = -9\,A$

(b) $t_0 = 1\,s$ $\quad i(t) = -9 + \frac{1}{0.1}\int_1^t (-2)\,du = -9 - 20(t-1) = 11 - 20t$

at $t = 4\,s$. $i(4) = 11 - 20 \cdot 4 = -69\,A$

$a_3 = -20\ A/s$ $\quad a_4 = 11\,A$

(c) $t_0 = 4\,s$. $\quad i(t) = -69 + \frac{1}{0.1}\int_4^t 1\,du = -69 + 10(t-4) = -109 + 10t$

at $t = 9\,s$. $i(9) = -109 + 10 \cdot 9 = -19\,A$

$a_5 = 10\ A/s$ $\quad a_6 = -109\,A$

(d) $t_0 = 9\,s$. $\quad i(t) = -19 + \frac{1}{0.1}\int_9^t (-1)\,du = -19 - 10(t-9) = 71 - 10t$

$a_7 = -10\ A/s$ $\quad a_8 = 71\,A$

Capacitors Inductors 005

Problem has been graded.

One of these three elements is a resistor, one is an inductor, and one is a capacitor, but you are not told in advance which one is which. You are given the voltages across and the currents through each one of the elements.

$$v(t) = 12\cos(4000t) \text{ V}$$

$i_1(t) = A_1\sin(4000t)$ $\quad$ $i_2(t) = A_2\cos(4000t)$ $\quad$ $i_3(t) = A_3\sin(4000t)$

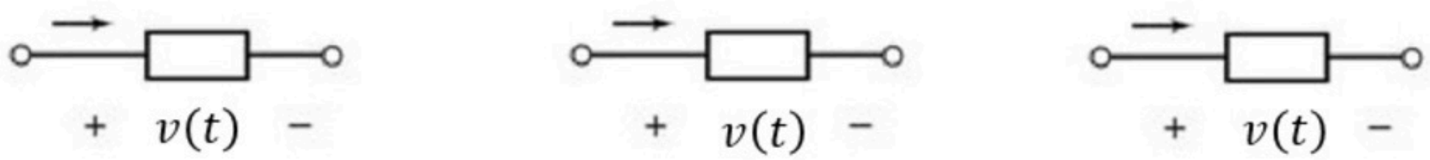

Find the value of the resistor *R*, the inductor *L* and the capacitor *C* (all three are positive values).

(For this problem, ignore the initial conditions. As we will see later in this course, this means we assume the system is in what is called "steady state".)

Given Variables:

A1 : -48 mA

A2 : 6 mA

A3 : 3 mA

Calculate the following:

R (kohm) :

2 ✓

L (H) :

1 ✓

C (uF) :

1 ✓

Hint: The elements may not be in the order R, L, C.

One of these three elements is a resistor, one is an inductor, and one is a capacitor, but you are not told in advance which one is which. You are given the voltages across and the currents through each one of the elements.

$$v(t) = 12\cos(4000t) \text{ V}$$

A1 = -96 mA

A2 = 12 mA

A3 = 3 mA

$i_1(t) = A_1\sin(4000t)$ $\quad$ $i_2(t) = A_2\cos(4000t)$ $\quad$ $i_3(t) = A_3\sin(4000t)$

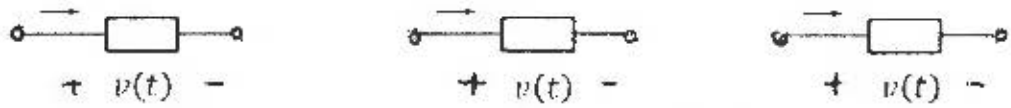

Find the value of the resistor *R*, the inductor *L* and the capacitor *C* (all three are positive values).

(For this problem, ignore the initial conditions. As we will see later in this course, this means we assume the system is in what is called "steady state".)

⊗ CAPACITOR: $i = C\frac{dv}{dt} = -C \cdot 12 \cdot 4000 \sin(4000t)$ (1)

⊗ INDUCTOR: $v = L\frac{di}{dt} \Rightarrow i = \frac{1}{L}\int v\,dt = \frac{12}{L} \cdot \frac{\sin(4000t)}{4000}$ (2)

⊗ RESISTOR: $v = iR \Rightarrow i = \frac{12}{R}\cos(4000t)$ (3)

⊗ ONLY i_2 IS $\cos(4000t) \Rightarrow$ FROM (3). $\frac{12}{R} = A_2 = 12 \cdot 10^{-3}$

$R = 10^3\ \Omega$ $\quad$ $\boxed{R = 1\ k\Omega}$

⊗ CAPACITOR HAS − SIGN FOR CURRENT

$\Rightarrow$ FROM (1). $-C \cdot 12 \cdot 4000 = A_1 = -96\ 10^{-3}$

$C = 2 \cdot 10^{-6}$ $\quad$ $\boxed{C = 2\ \mu F}$

⊗ INDUCTOR HAS + SIGN FOR CURRENT

$\Rightarrow$ FROM (2): $\frac{12}{4000L} = A_3 = 3 \cdot 10^{-3} \Rightarrow \boxed{L = 1\ H}$

Capacitors Inductors 006

Unlimited Attempts.

Find the current i (i.e., the constant B).

(For this problem, ignore the initial conditions. As we will see later in this course, this means we assume the system is in what is called "steady state".)

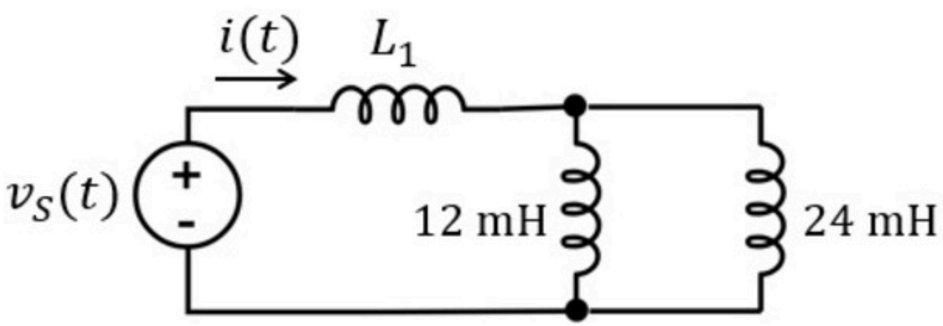

$$v_S(t) = \mathrm{A} \cdot \cos(2000\mathrm{t})$$
$$i(t) = \mathrm{B} \cdot \sin(2000\mathrm{t})$$

Given Variables:

A : 8 V

L1 : 2 mH

Calculate the following:

B (mA) :

400 ✓

Hint: Mind the units

Find the current i (i.e., the constant B).

A = 4.8 V

L1 = 4 mH

(For this problem, ignore the initial conditions. As we will see later in this course, this means we assume the system is in what is called "steady state".)

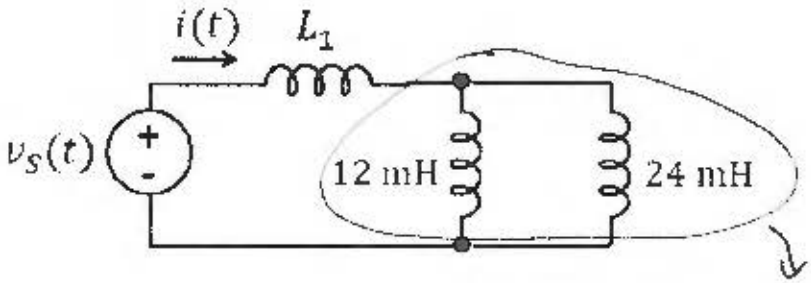

$$v_S(t) = A \cdot \cos(2000t)$$

$$i(t) = B \cdot \sin(2000t)$$

PARALLEL

$$\frac{1}{\frac{1}{12} + \frac{1}{24}} = \frac{1}{3/24} = 8 \text{ mH}$$

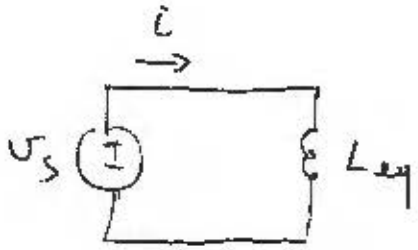

$$L_{eq} = L_1 + 8 = 12 \text{ mH}$$

$$v = L \frac{di}{dt} \Rightarrow 4.8 \cos(2000t) = L_{eq} \cdot B \; 2000 \cos(2000t)$$

$$\Rightarrow B = \frac{4.8}{2000 \cdot 12 \cdot 10^{-3}} = \frac{4.8}{24} = 0.2 \text{ A}$$

$$\boxed{B = 200 \text{ mA}}$$

PP Capacitors Inductors 001

Unlimited Attempts.

Below is the current through a 5 μH inductor.

What is the voltage v_1 across the inductor at time t = 3 ms?

What is the voltage v_2 across the inductor at time t = 5 ms?

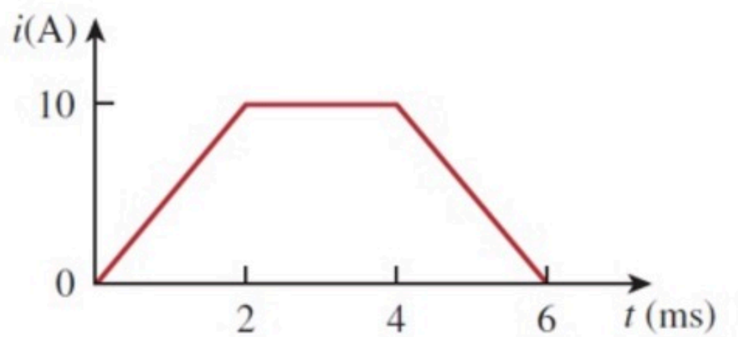

Given Variables:

. : . .

Calculate the following:

v1 (V) :

0 ✓

v2 (V) :

-0.025 ✓

Hint: Check the units.

PP Capacitors Inductors 002

Unlimited Attempts.

Below is the current through a 400 μF capacitor. The voltage across the capacitor at time t = 0 is 5 V.

What is the voltage v_1 across the capacitor at time t = 3 s?

What is the voltage v_2 across the capacitor at time t = 8 s?

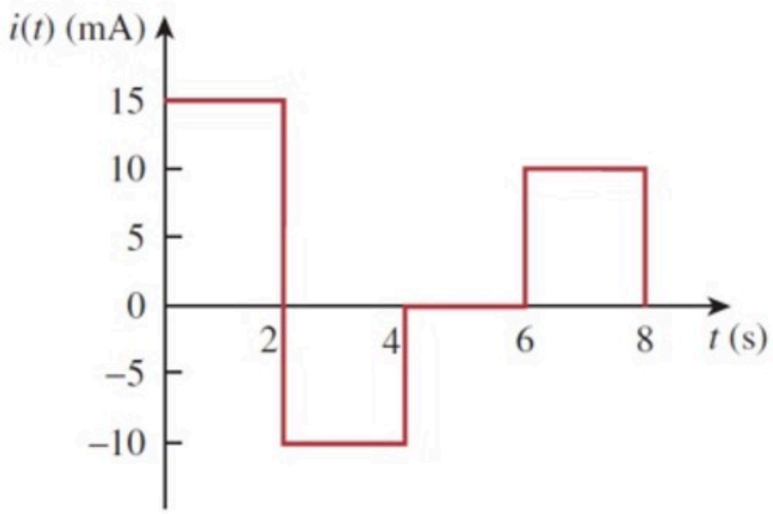

Given Variables:

. : . .

Calculate the following:

v1 (V) :

55 ✓

v2 (V) :

80 ✓

Hint: Check the units.

PP Capacitors Inductors 003

Unlimited Attempts.

Below is the voltage across a 4 H inductor. The current through the inductor at time t = 1 s is -1 A.

What is the current i_1 through the inductor at time t = 3 s?

What is the current i_2 through the inductor at time t = 4.5 s?

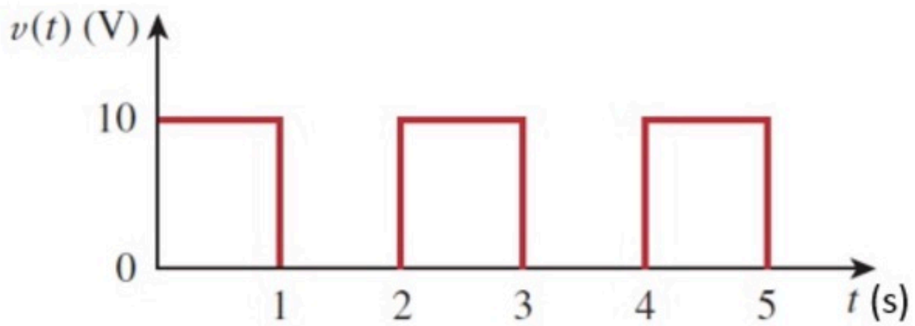

Given Variables:

. : . .

Calculate the following:

i1 (A) :

1.5 ✓

i2 (A) :

2.75 ✓

Hint: Check initial condition.

PP Capacitors Inductors 004

Unlimited Attempts.

The current through a 400 nF capacitor is $0.05e^{-\frac{t}{2\,\mu s}}$ A. The voltage across the capacitor at time t = 0 is 1 V.

What is the voltage v across the capacitor at time $t = \propto$?

Given Variables:

. : . .

Calculate the following:

v (V) :

1.25 ✓

Hint: Check the units

PP Capacitors Inductors 005

Unlimited Attempts.

The current through a 20 mH inductor is $0.04te^{-\frac{t}{2\,\mu s}}$ A.

What is the voltage v_1 across the inductor at time t = 0?

Given Variables:

. : . .

Calculate the following:

v1 (mV) :

0.8 ✓

Hint: Check the units

PP Capacitors Inductors 006

Unlimited Attempts.

What is the voltage v_o at time t = 5 s?

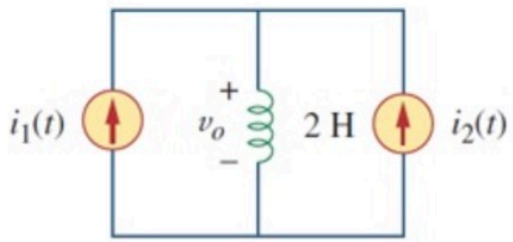

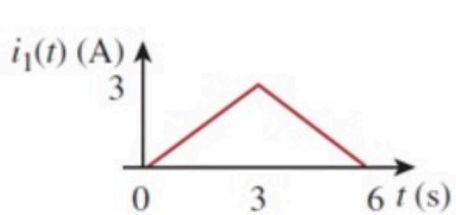

Given Variables:

. : . .

Calculate the following:

vo (V) :

-6

Hint: Use superposition

PP Capacitors Inductors 007

Unlimited Attempts.

Find $X = \frac{L_{eq}}{L}$.

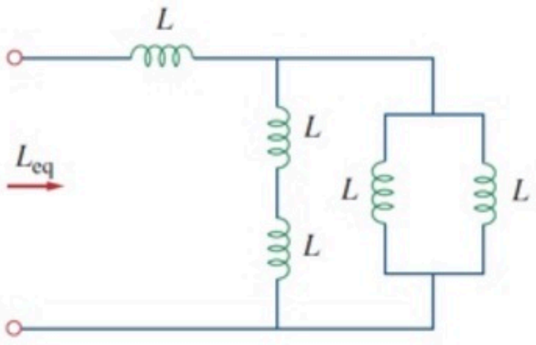

Given Variables:

. : . .

Calculate the following:

X (H/H) :

1.4 ✓

Hint: Series and parallel connection of inductors

PP Capacitors Inductors 008

Unlimited Attempts.

Find $X = \frac{C_{eq}}{C}$.

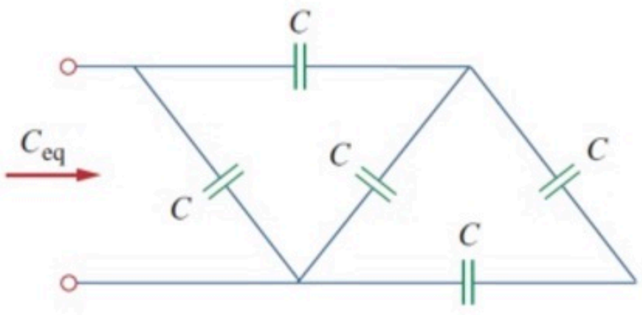

Given Variables:

. : . .

Calculate the following:

X (F/F) :

1.6

Hint: Series/parallel equations are 'opposite' of those for resistors.

First order circuits 001

Problem has been graded.

Given a voltage $v(t)$, find the current $i(t)$.

$$v(t) = A_1 + B_1 \cdot e^{-10t}$$

$$i(t) = A_2 + B_2 \cdot e^{-10t}$$

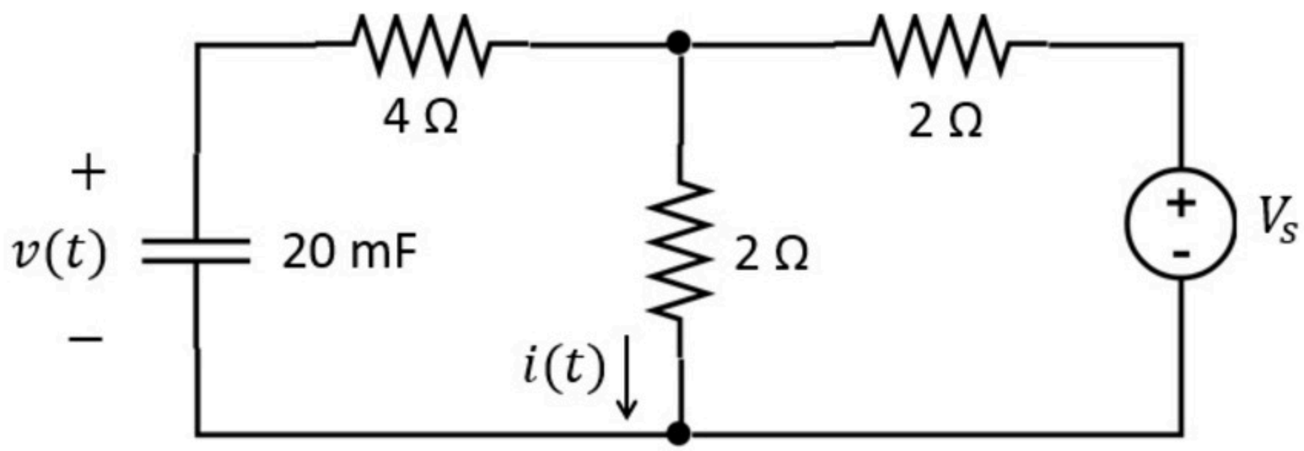

Given Variables:

A1 : 10 V

B1 : 10 V

Vs : 20 V

Calculate the following:

A2 (A) :

5 ✓

B2 (A) :

1 ✓

Given a voltage $v(t)$, find the current $i(t)$.

$$v(t) = A_1 + B_1 \cdot e^{-10t}$$

$$i(t) = A_2 + B_2 \cdot e^{-10t}$$

A1 : 10 V

B1 : 10 V

Vs : 20 V

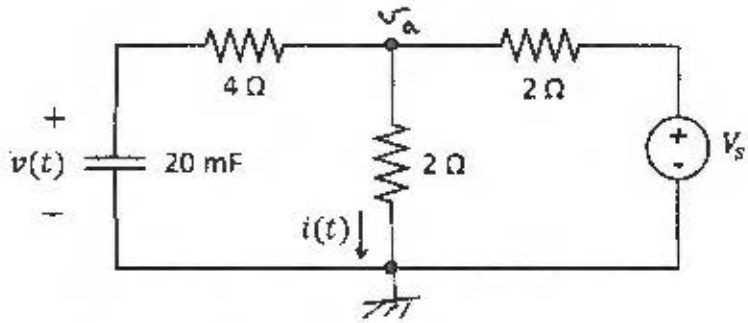

NODAL

$$\frac{v_a - v}{4} + \frac{v_a - V_s}{2} + \frac{v_a}{2} = 0$$

$$v_a - v + 2(v_a - V_s) + 2v_a = 0$$

$$5v_a = v + 2V_s$$

$$v_a = \frac{v}{5} + \frac{2V_s}{5}$$

$$i = \frac{v_a}{2} = \frac{v}{10} + \frac{V_s}{5} = 1 + e^{-10t} + 4$$

$$\boxed{A_2 = 5\,A}$$

$$\boxed{B_2 = 1\,A}$$

First order circuits 002

Unlimited Attempts.

a) Find the time constant τ_1 and the steady state capacitor voltage $v_1 = v(\infty)$ when the switch is open.

b) Find the time constant τ_2 and the steady state capacitor voltage $v_2 = v(\infty)$ when the switch is closed.

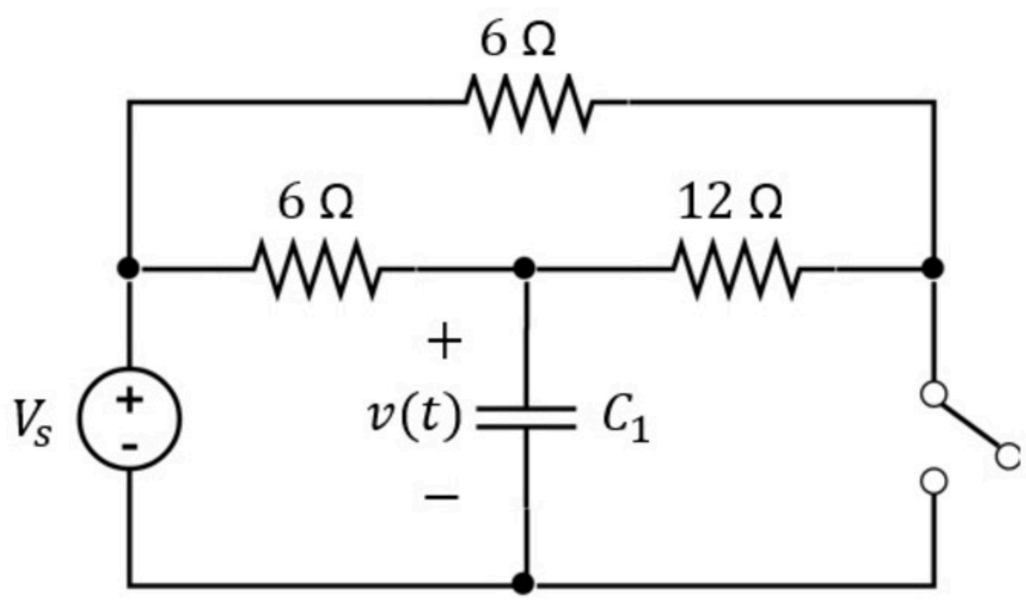

Given Variables:

Vs : 30 V

C1 : 8 nF

Calculate the following:

tau1 (ns) :

36 ✓

v1 (V) :

30 ✓

tau2 (ns) :

32 ✓

v2 (V) :

20 ✓

Hint: The circuit is different in the two cases

a) Find the time constant τ_1 and the steady state capacitor voltage $v_1 = v(\infty)$ when the switch is open.

b) Find the time constant τ_2 and the steady state capacitor voltage $v_2 = v(\infty)$ when the switch is closed.

Vs : 60 V

C1 : 6 nF

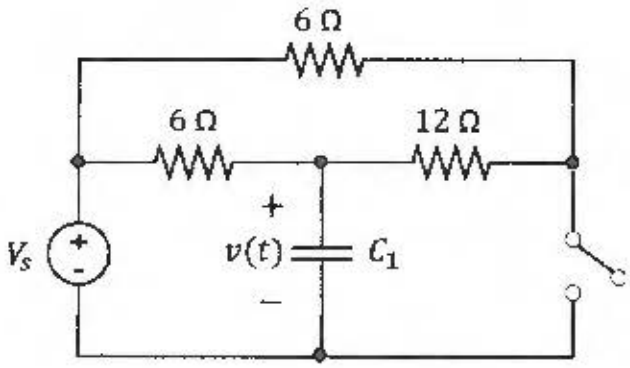

(a)

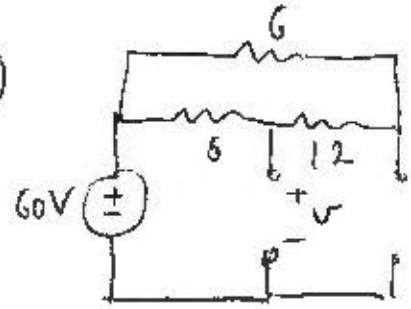

→ NO CURRENTS

$\boxed{v_1 = 60V}$

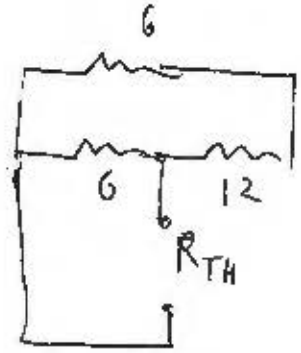

$\tau_1 = R_{TH} \cdot C_1 \Rightarrow \boxed{\tau_1 = 27\,ns}$

$R_{TH} = 6 // 18 = \frac{9}{2}\,\Omega$

(b)

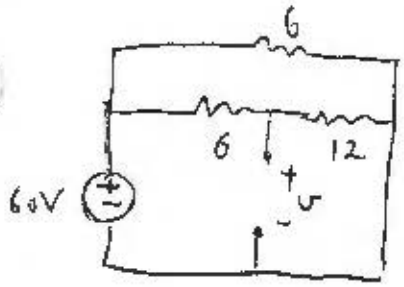

$v = 60 \cdot \frac{12}{6+12} = 40$

$\boxed{v_2 = 40V}$

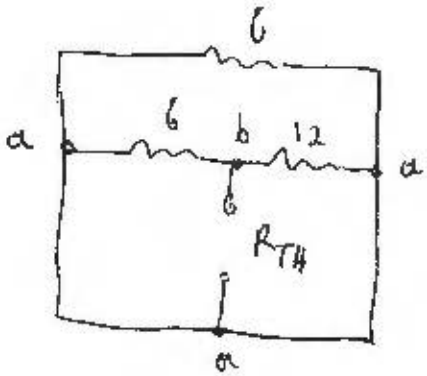

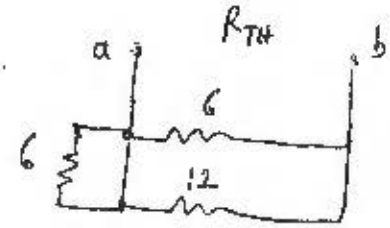

$R_{TH} = 6 // 12 = 4\,\Omega$

$\tau_2 = R_{TH} \cdot C_1 \Rightarrow \boxed{\tau_2 = 24\,ns}$

First order circuits 003

Problem has been graded.

The switch has been open for a long time before it closes at time $t = 0$.

Find the capacitor voltage $v_c = A + B \cdot e^{-t/\tau}$ for $t > 0$.

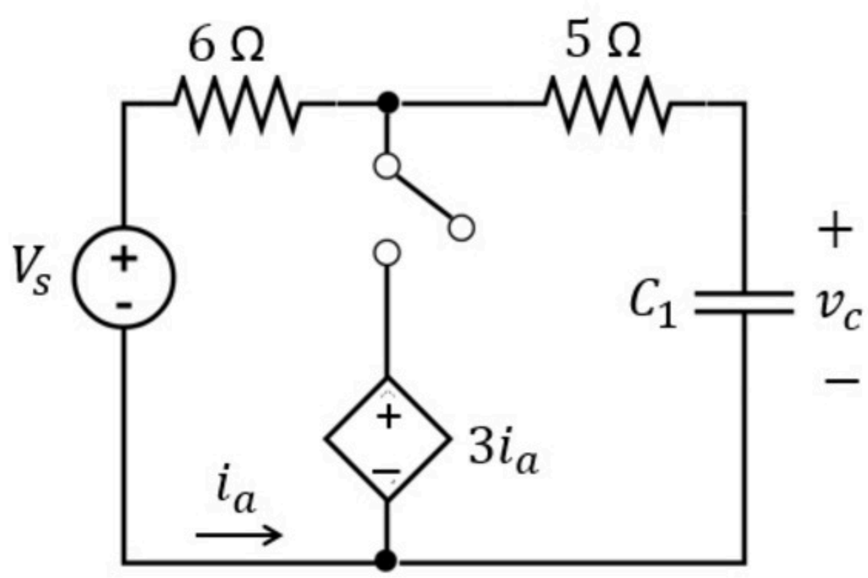

Given Variables:

Vs : 15 V

C1 : 0.1 nF

Calculate the following:

A (V) :

-15 ✓

B (V) :

30 ✓

tau (ns) :

0.5 ✓

Hint: First find the capacitor voltage at t = 0-. Note where A and B are.

The switch has been open for a long time before it closes at time $t = 0$.

Find the capacitor voltage $v_c = A + B \cdot e^{-t/\tau}$ for $t > 0$.

Vs : 30 V

C1 : 0.2 nF

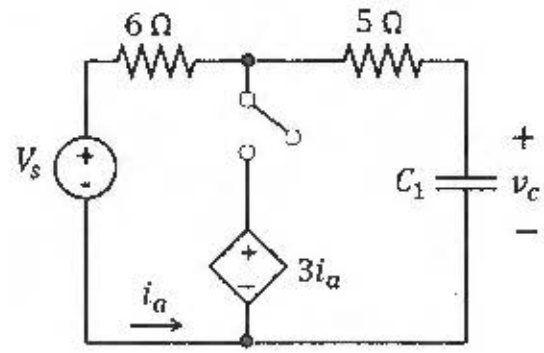

ⓐ $t = 0^-$

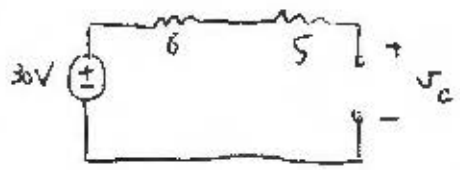

$v_c(0^-) = 30V$

$\Downarrow$

ⓑ $v_c(0^+) = 30V$

ⓒ $t = \infty$

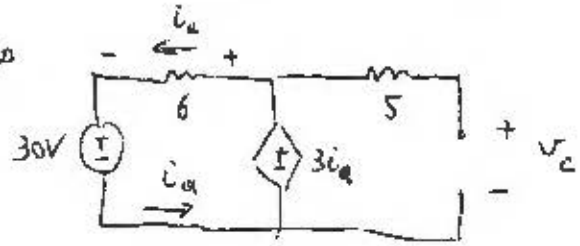

$30 + 6i_a - 3i_a = 0$

$3i_a = -30$

$i_a = -10$ A

$\Rightarrow v_c(\infty) = 3i_a = -30V$

ⓓ

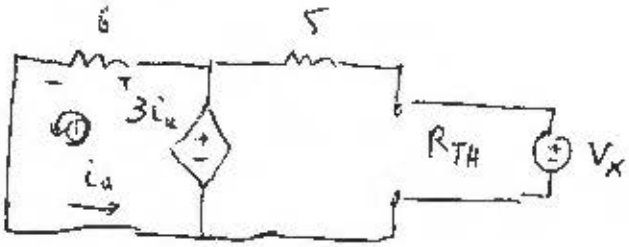

KVL ①: $3i_a - 6i_a = 0$

$\Rightarrow i_a = 0$

$\Rightarrow$

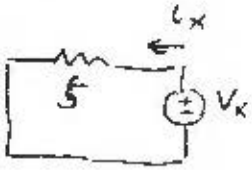

$\frac{V_x}{5} = i_x \Rightarrow R_{TH} = 5\,\Omega$

$\boxed{\tau = RC = 1\,ms}$

$A = v_c(\infty) \Rightarrow \boxed{A = -30V}$

$A + B = v_c(0^+) \Rightarrow \boxed{B = 60V}$

First order circuits 004

Problem has been graded.

The switch closes at time $t = 0$.
Find the current i_L for $t > 0$:

$$i_L(t) = A \cdot e^{-t/\tau} + B$$

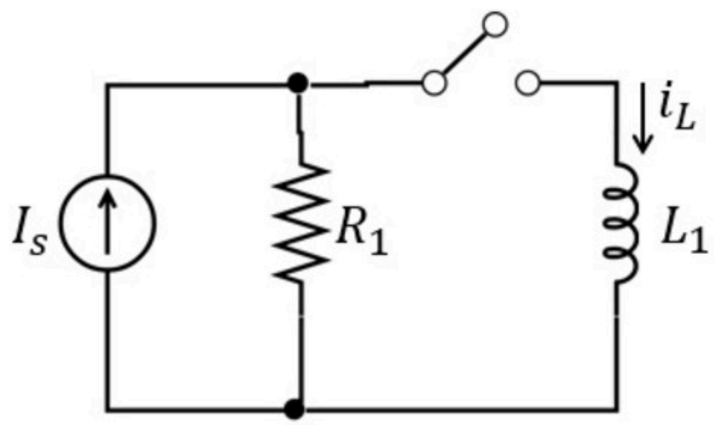

Given Variables:

Is : 2 A
R1 : 10 kohm
L1 : 10 mH

Calculate the following:

A (A) :

-2 ✓

B (A) :

2 ✓

tau (ms) :

0.001 ✓

Hint: What is the current iL for t < 0?

The switch closes at time $t = 0$.
Find the current i_L for t > 0:

$$i_L(t) = A \cdot e^{-t/\tau} + B$$

Is : 2 A

R1 : 3 kohm

L1 : 30 mH

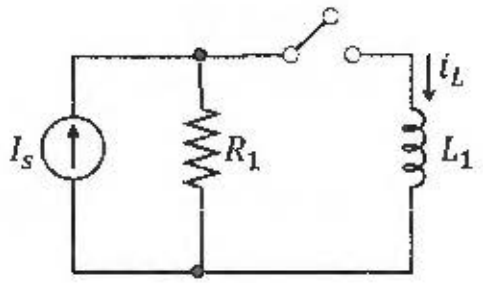

(a) $t = 0^-$: $i_L = 0$

(b) $t = 0^+$: $i_L(0^+) = i_L(0^-) = 0\,A$

(c) $t = \infty$:

$i_L(\infty) = 2\,A$

(d)

$R_{TH} = 3\,k\Omega$

$$\tau = \frac{L_1}{R_{TH}} = \frac{30 \cdot 10^{-3}}{3 \cdot 10^{3}} = 10 \cdot 10^{-6}\,s$$

$$\boxed{\tau = 0.01\,ms}$$

$$B = i_L(\infty) = 2A \Rightarrow \boxed{B = 2A}$$

$$A + B = i_L(0^+) = 0A \Rightarrow \boxed{A = -2A}$$

$$i_L(t) = 2 - 2e^{-\frac{t}{0.01\,ms}}\ A$$

$$i_L(t) = 2\left(1 - e^{-\frac{t}{0.01\,ms}}\right)\ A$$

First order circuits 005

Problem has been graded.

The switch has been closed for a long time before it opens at $t = 0$. After the switch opens, find the resistor voltage $v(t) = A \cdot e^{-t/\tau} + B$.

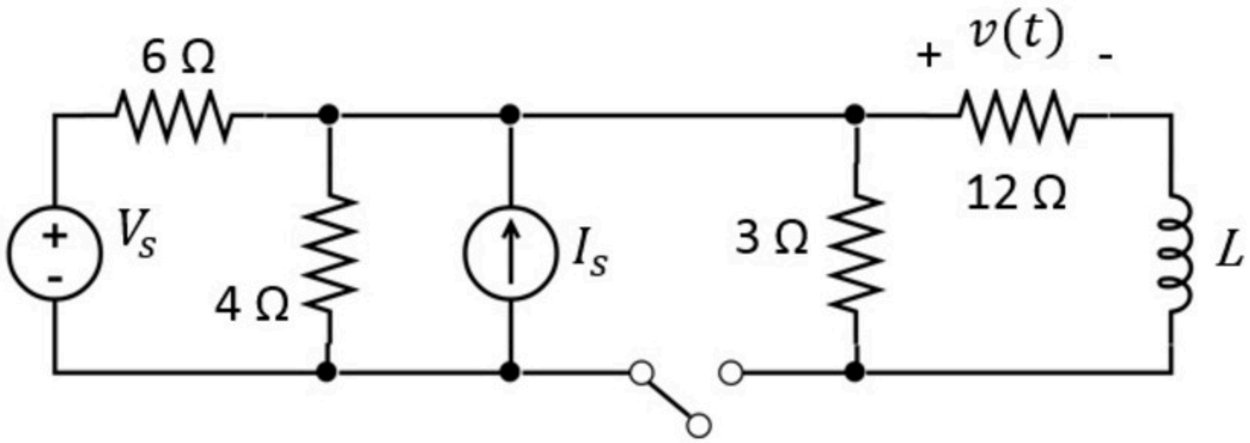

Given Variables:

Vs : 28 V

Is : 2 A

L : 1.5 mH

Calculate the following:

A (V) :

8 ✓

B (V) :

0 ✓

tau (ms) :

0.1 ✓

Hint: What is the current iL for t < 0?

The switch has been closed for a long time before it opens at $t = 0$. After the switch opens, find the resistor voltage $v(t) = A \cdot e^{-t/\tau} + B$.

Vs : 12 V

Is : 8 A

L : 15 mH

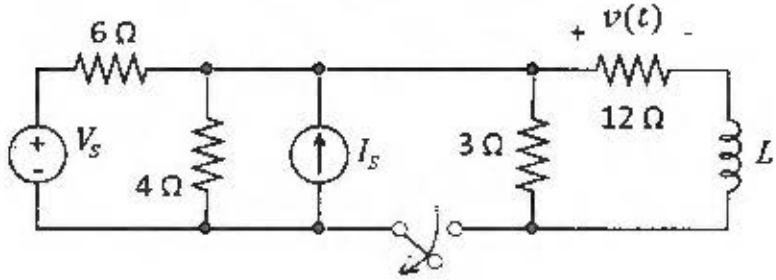

(a) $t = 0^-$

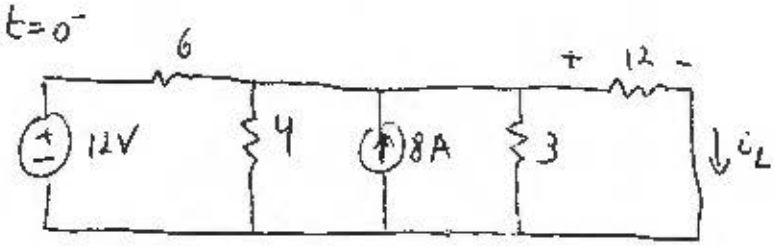

SUPERPOSITION

$$i_{L_1} = \frac{12}{6 + 4\|3\|12} \cdot \frac{4\|3}{4\|3 + 12} = \frac{1}{5}\ A$$

$$i_{L_2} = \frac{6\|4\|3}{6\|4\|3 + 12} \cdot 8 = \frac{4}{5}\ A$$

$i_L(0^-) = 1\ A \qquad v(0^-) = 12\ V$

(b) $t = 0^+$: $i_L(0^+) = 1\ A \implies v(0^+) = 12\ V$

(c)

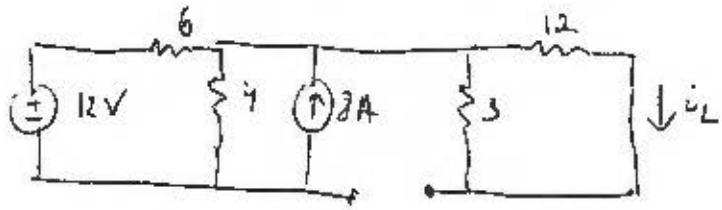

$i_L(\infty) = 0\ A$

$v(\infty) = 0\ V$

(d)

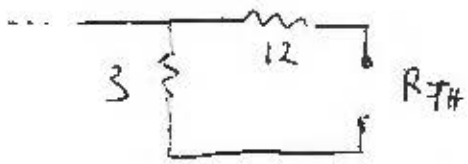

$R_{TH} = 15\ \Omega$

$$\tau = \frac{L}{R_{TH}} = \frac{15 \cdot 10^{-3}}{15} = 10^{-3}\ s$$

$$\boxed{\tau = 1\ ms}$$

$B = v(\infty) \implies \boxed{B = 0\ V}$

$A + B = v(0^+) \implies \boxed{A = 12\ V}$

First order circuits 006

Problem has been graded.

When $t < 0$, $i_s = I_0$

When $t > 0$, $i_s = I_1$

Find $v(t) = A \cdot e^{-t/\tau} + B$ for $t > 0$

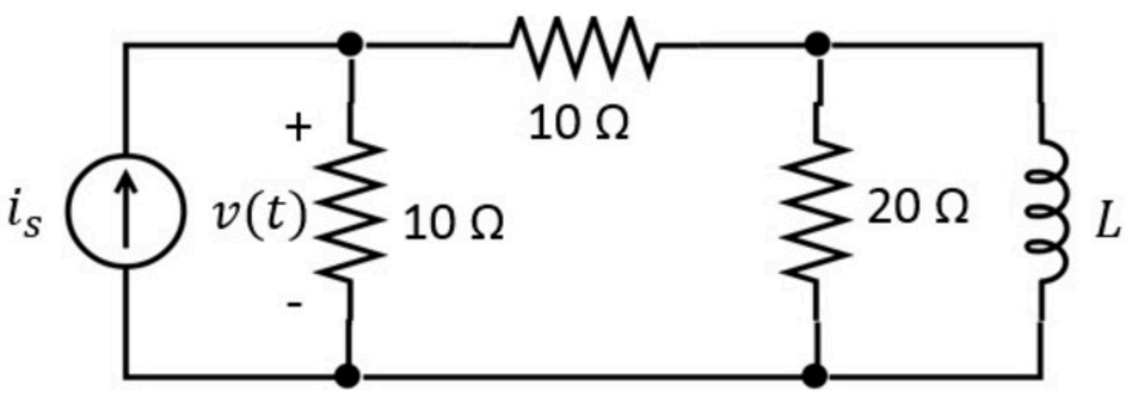

Given Variables:

I0 : 2 A

I1 : 10 A

L : 0.25 uH

Calculate the following:

A (V) :

20 ✓

B (V) :

50 ✓

tau (ns) :

25 ✓

Hint: What is the inductor current for t < 0?

When $t < 0$, $i_s = I_0$

When $t > 0$, $i_s = I_1$

Find $v(t) = A \cdot e^{-t/\tau} + B$ for $t > 0$

I0 : 4 A

I1 : 6 A

L : 0.25 uH

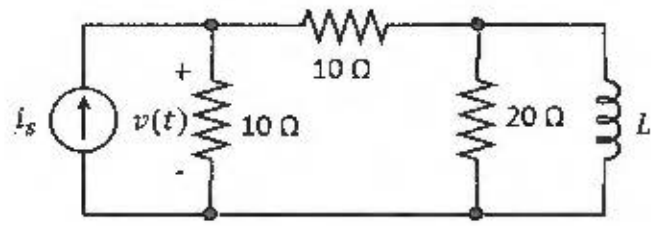

(a) $t = 0^-$

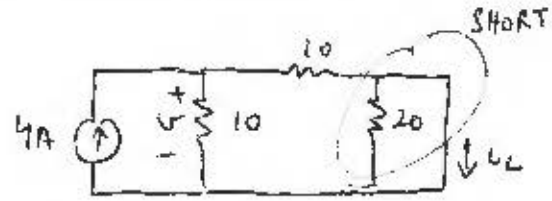

$v(0^-) = (4A) \cdot (10 // 10) = 20V$

$i_L(0^-) = (4A) \frac{10}{10+10} = 2A$

$i_L(0^+) = 2A$

(b) $t = 0^+$

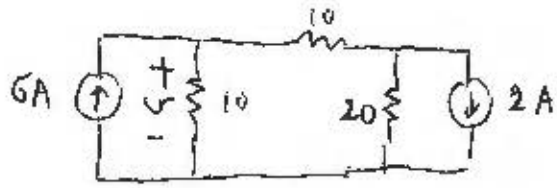

SUPERPOSITION:

$v_1 = 6 \cdot (10 // 30) = 6 \cdot \frac{30}{4} = 45V$

$v_2 = (-2) \cdot (20 // 20) \cdot \frac{1}{2} = -10V$

$v(0^+) = v_1 + v_2 = 35V$

(c) $t = \infty$

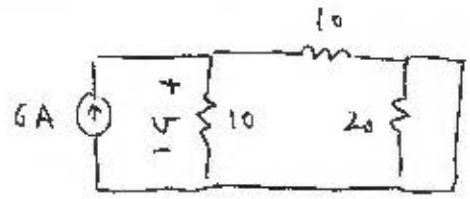

$v(\infty) = 6 \cdot (10 // 10) = 30V$

(d)

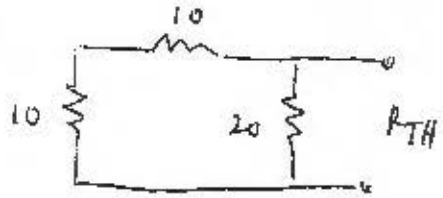

$R_{TH} = 20 // 20 = 10\,\Omega$

$\tau = \frac{L}{R_{TH}} = \frac{0.25 \cdot 10^{-6}}{10} = 25 \cdot 10^{-9}$

$\boxed{\tau = 25\ ns}$

$B = v(\infty) \Rightarrow \boxed{B = 30V}$

$A + B = v(0^+) \Rightarrow \boxed{A = 5V}$

First order circuits 007

Problem has been graded.

The switch closes at time $t = 0$ and we measure

$$v(t) = 24 - 12e^{-t/2\,\mu s}\ \text{V} \qquad \text{for } t > 0$$

Find the values of R_1, R_2, and L_1.

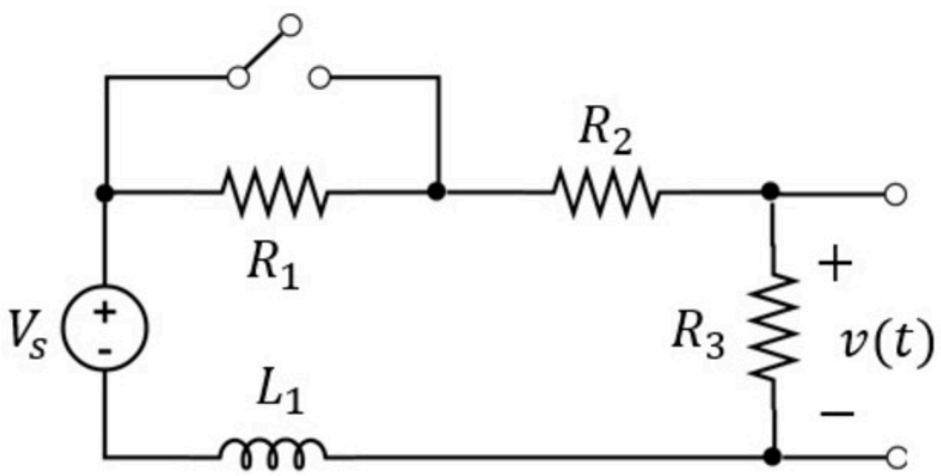

Given Variables:

Vs : 48 V

R3 : 12 kohm

Calculate the following:

R1 (ohm) :

24000 ✓

R2 (ohm) :

12000 ✓

L1 (H) :

0.048 ✓

Hint: Consider v(inf) first. Mind the units.

The switch closes at time $t = 0$ and we measure

$$v(t) = 24 - 12e^{-t/2\mu s} \text{ V} \quad \text{for } t > 0$$

Vs : 36 V

R3 : 2 kohm

Find the values of R_1, R_2, and L_1.

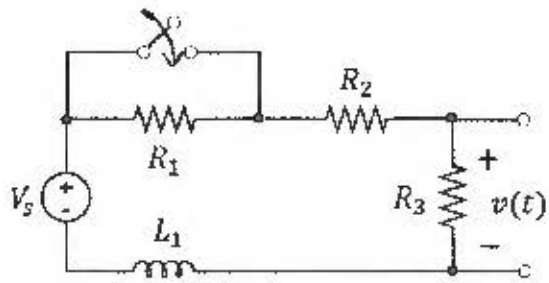

(a) $t = \infty$: $v(\infty) = 24V$.

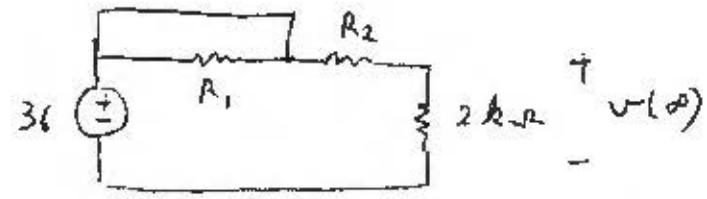

$$v(\infty) = 36 \cdot \frac{2k}{2k + R_1}$$

$$\Rightarrow 24 R_1 = 36 \cdot 2k - 24 \cdot 2k \Rightarrow R_2 = 1 k\Omega \Rightarrow \boxed{R_2 = 1000\,\Omega}$$

(b)

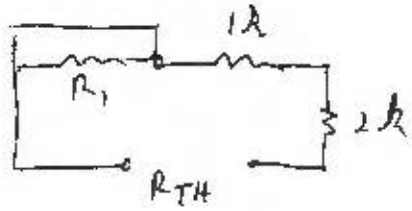

$R_{TH} = 3 k\Omega$

$\tau = 2\ 10^{-6} s$

$= \frac{L_1}{R_{TH}}$

$$\Rightarrow L_1 = \tau \cdot R_{TH} = 2 \cdot 10^{-6} \cdot 3\ 10^{3} = 6 \cdot 10^{-3}$$

$$\boxed{L_1 = 0.006\ H}$$

(c) $t = 0^+$. $v(0^+) = 12V$

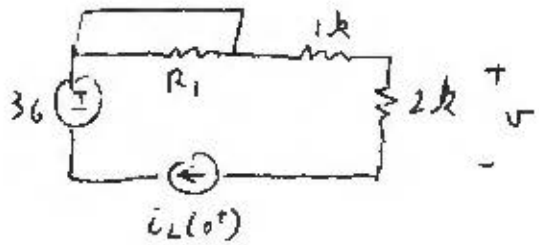

$$v(0^+) = i_L(0^+) \cdot 2k$$

$$\Rightarrow i_L(0^+) = \frac{12}{2k} = 6\ mA$$

(d) $t = 0^-$:

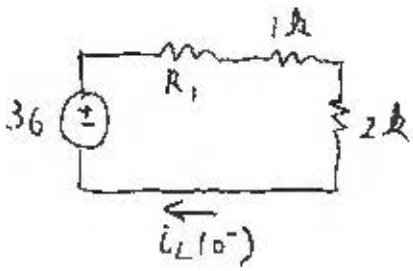

$$i_L(0^-) = i_L(0^+) = 6\ 10^{-3}$$

$$= \frac{36}{R_1 + 1k + 2k}$$

$$R_1 = \frac{36}{6 \cdot 10^{-3}} - 1k - 2k \qquad R_1 = 3k$$

$$\boxed{R_1 = 3000\,\Omega}$$

First order circuits 008

Unlimited Attempts.

When $t < 0$, $v_s = V_0$

When $t > 0$, $v_s = V_1$

Find $i(t) = A_1 + B_1 \cdot e^{-t/\tau_1}$ for $t > 0$

and $v(t) = A_2 + B_2 \cdot e^{-t/\tau_2}$ for $t > 0$

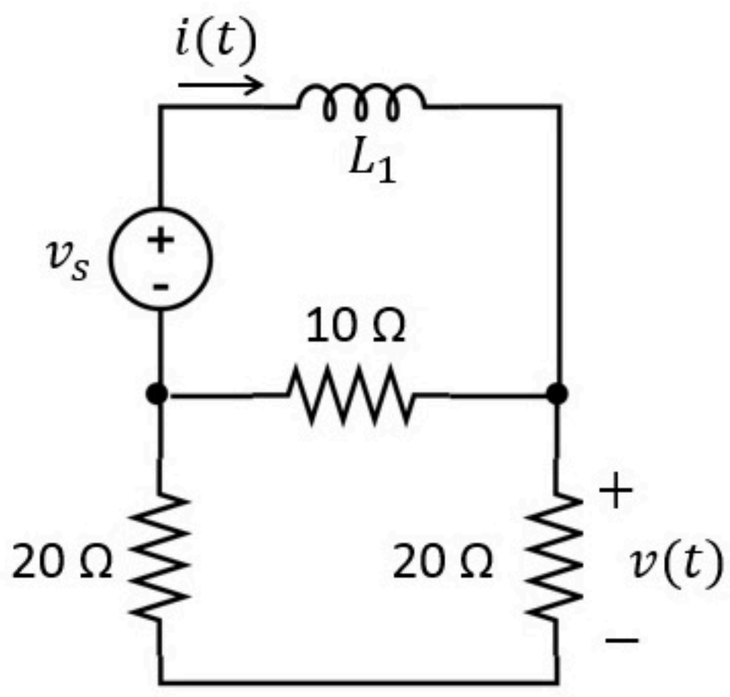

Given Variables:

V0 : 24 V

V1 : 32 V

L1 : 4 mH

Calculate the following:

A1 (A) :

4 ✓

B1 (A) :

-1 ✓

tau1 (ms) :

0.5 ✓

A2 (V) :

16 ✓

B2 (V) :

-4 ✓

tau2 (ms) :

0.5 ✓

Hint: What is the current iL for t < 0? Note where A and B are.

When $t < 0$, $v_s = V_0$

When $t > 0$, $v_s = V_1$

Find $i(t) = A_1 + B_1 \cdot e^{-t/\tau_1}$ for $t > 0$

and $v(t) = A_2 + B_2 \cdot e^{-t/\tau_2}$ for $t > 0$

V0 : 40 V

V1 : 64 V

L1 : 2 mH

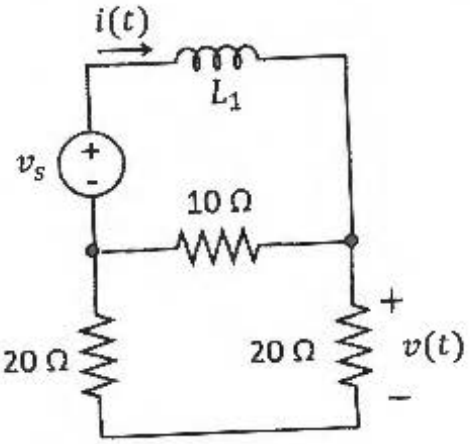

(a) $t = 0^-$

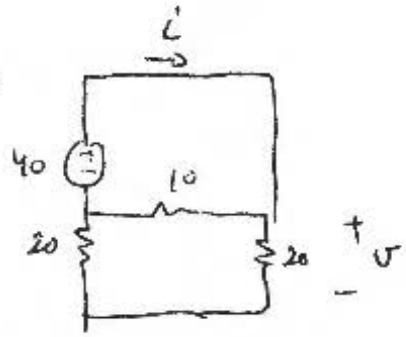

$$i(0^-) = \frac{40}{10 // 40} = \frac{40}{8} = 5\,A$$

$$v(0^-) = 40 \cdot \frac{20}{20+20} = 20\,V$$

(b) $t = 0^+$

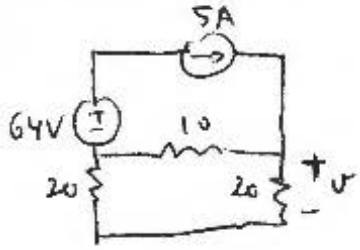

$$i(0^+) = 5\,A$$

$$v(0^+) = (5\,A) \cdot (10 // 40) \frac{20}{20+20} = 20\,V$$

(c) $t = \infty$

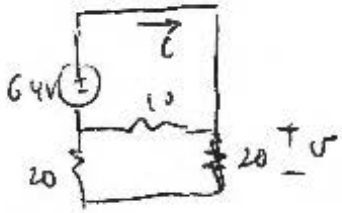

$$i(\infty) = \frac{64}{10 // 40} = 8\,A$$

$$v(\infty) = 64 \cdot \frac{20}{20+20} = 32\,V$$

(d)

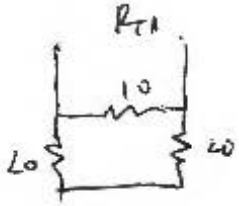

$$R_{TH} = 10 // 40 = 8\,\Omega$$

$$\tau = \frac{L}{R_{TH}} = \frac{2 \cdot 10^{-3}}{8} = 0.25 \cdot 10^{-3}$$

$A_1 = i(\infty) \Rightarrow \boxed{A_1 = 8\,A}$

$A_2 = v(\infty) \Rightarrow \boxed{A_2 = 32\,V}$

$B_1 + A_1 = i(0^+) \Rightarrow \boxed{B_1 = -3\,A}$

$B_2 + A_2 = v(0^+) \Rightarrow \boxed{B_2 = -12\,V}$

$$\boxed{\tau_1 = \tau_2 = 0.25\ ms}$$

First order circuits 009

Problem has been graded.

For $t < 0$, the switch has been in position *A* for a long time. At time $t = 0$, it moves from *A* to *B*.

Find the time t_1 it takes to reduce the capacitor voltage to 37% of its initial voltage ($\frac{1}{e} \approx .37$).

What is the total energy *E* received by the resistor from the moment the switch is flipped until the capacitor is completely discharged?

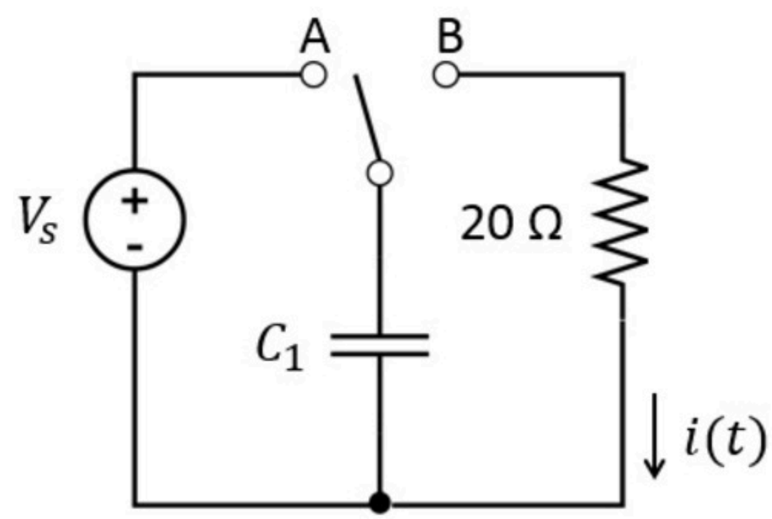

Given Variables:

Vs : 12 V

C1 : 2 uF

Calculate the following:

t1 (ms) :

0.04 ✓

E (mJ) :

0.144 ✓

Hint: To calculate E, consider where the energy is coming from. Verify by integrating the P(t).

For $t < 0$, the switch has been in position A for a long time. At time $t = 0$, it moves from A to B.

Find the time t_1 it takes to reduce the capacitor voltage to 37% of its initial voltage ($\frac{1}{e} \approx .37$).

What is the total energy E received by the resistor from the moment the switch is flipped until the capacitor is completely discharged?

Vs : 2 V

C1 : 2 uF

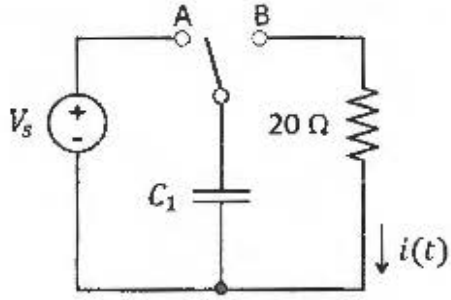

1

(a) $t = 0^-$:

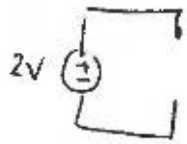

$v_c(0^-) = 2V$

(b) $t = 0^+$: $v_c(0^+) = 2V$

(c) $t = \infty$

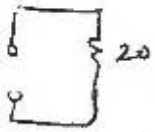

$v_c(\infty) = 0V$

(d) $R_{TH} = 20\,\Omega$

$\tau = R_{TH} \cdot C = 40\,\mu s$

$\Rightarrow v_c(t) = 2e^{-t/\tau}$ $\qquad v_c(t_1) = \frac{1}{e} \cdot v_c(0^+) = \frac{2}{e}$

$\Rightarrow 2e^{-t_1/\tau} = 2e^{-1} \Rightarrow \frac{t_1}{\tau} = 1 \Rightarrow t_1 = \tau = 40\,\mu s$ $\qquad \boxed{t_1 = 0.04\,ms}$

2 $E_{rec.} = E_{supplied} \Rightarrow$ Coming from Capacitor

$E = \frac{1}{2}CV^2 = \frac{1}{2} 2 \cdot 10^{-6}\, 2^2 = 4\,\mu J$ $\qquad \boxed{E = 0.004\,mJ}$

OR $\quad i(t) = Ae^{-t/\tau} + B = 0.1e^{-t/\tau}$

$i(0^+) = \frac{2V}{20\Omega} = 0.1\,A$

$i(\infty) = 0$

$E = \int P = \int_0^\infty i^2 R = 20 \cdot (0.1)^2 \int_0^\infty e^{-2t/\tau} dt$

$= -0.2 \cdot \frac{\tau}{2} e^{-2t/\tau} \Big|_0^\infty$

$= 0.1\,\tau \Rightarrow E = 4\,\mu J$

PP First order circuits 011

Unlimited Attempts.

The voltage source behaves as shown (and assume it has been zero for a long time for $t < 0$).

Find $v_1(t) = D$ for $t = 0^-$

$= A_1 \cdot e^{-t/\tau 1} + B_1$ for $0 < t < 2$ s

$= A_2 \cdot e^{-(t-2\,s)/\tau 2} + B_2$ for 2 s $< t$

Note, for your calculations, use: $e^{-1/1.5} \approx 0.5$

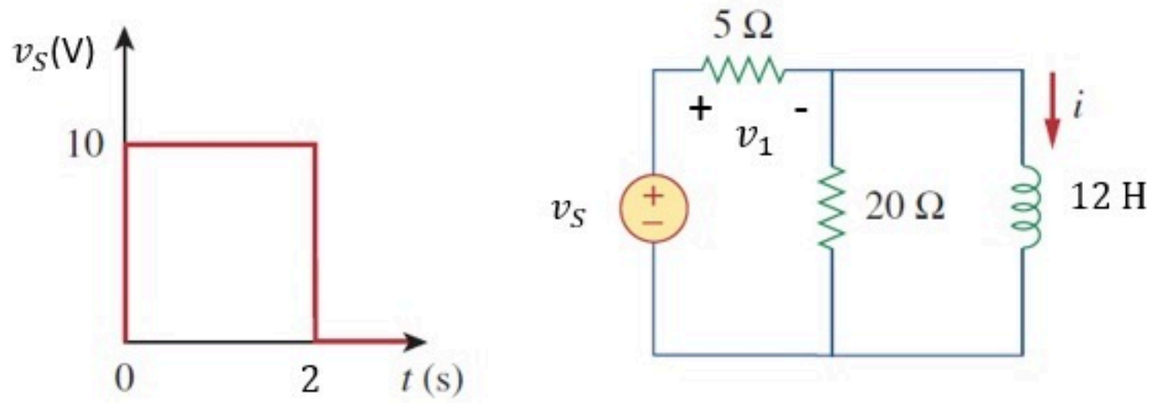

Given Variables:

. : . .

Calculate the following:

D (V) :

0 ✓

A1 (V) :

-8 ✓

B1 (V) :

10 ✓

tau1 (s) :

3 ✓

A2 (V) :

4 ✓

B2 (V) :

0 ✓

tau2 (s) :

3 ✓

Hint: Find the result of the first transition first.

(a) $\boxed{v_s = 0}$ $\quad \underline{t = 0^-}$:

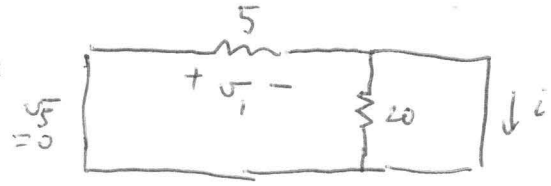

$v_1(0^-) = 0\,V$

$i(0^-) = 0\,A$

$\boxed{D = 0\,V}$

(b) $\boxed{v_s = 10}$ $\quad \underline{t = 0^+}$:

$i(0^+) = 0\,A \rightsquigarrow$ open

$v_1(0^+) = 10 \cdot \frac{5}{5+20} = 2\,V$

$\underline{t = \infty}$:

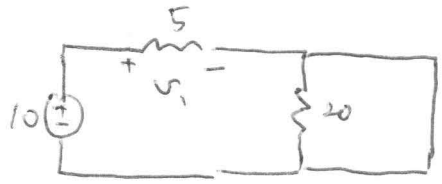

$i(\infty) = \frac{10}{5} = 2\,A$

$v_1(\infty) = 10\,V$

$\underline{R_{TH}}$: $\quad R_{TH} = 5 \| 20 = 4\,\Omega \Rightarrow \tau = \frac{L}{R} = \frac{12}{4} = 3\,s$

$v_1(t) = -8e^{-t/3} + 10, \quad 0 < t < 2$

$i(t) = -2e^{-t/3} + 2, \quad 0 < t < 2$

$\boxed{A_1 = -8\,V}$

$\boxed{B_1 = 10\,V}$

$\boxed{\tau_1 = 3\,s}$

$\underline{t = 2^-}$: $\quad i(2^-) = -2e^{-2/3} + 2 = -2e^{-\frac{1}{1.5}} + 2 = -2 \cdot \frac{1}{2} + 2 = 1\,A$

(c) $\boxed{v_s = 0}$

$\underline{t = 2^+}$:

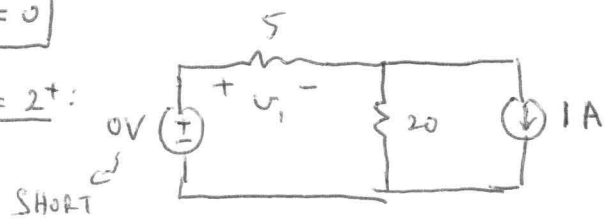

$i(2^+) = i(2^-) = 1\,A$

$v_1 = 1 \cdot (5 \| 20) = 1 \cdot 4 = 4\,V$

$\underline{t = \infty}$:

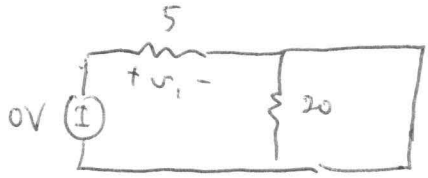

$i(\infty) = 0$

$v_1(\infty) = 0\,V$

$\underline{R_{TH}}$: SAME AS BEFORE $\Rightarrow \tau = 3\,s$

$v_1(t) = 4e^{-t/3} + 0$

$\boxed{A_2 = 4\,V}$

$\boxed{B_2 = 0\,V}$

$\boxed{\tau_2 = 3\,s}$

Second order circuits 001

Problem has been graded.

The switch opens at time t = 2 s. Before the switch opens, the system has reached steady state.

Find these voltages and currents (i.e., just before the switch opens):

$i_{L1} = i_L(2^-)$ $v_{L1} = v_L(2^-)$ $i_{C1} = i_C(2^-)$ $v_{C1} = v_C(2^-)$

Find these voltages and currents (i.e., just after the switch opens):

$i_{L2} = i_L(2^+)$ $v_{L2} = v_L(2^+)$ $i_{C2} = i_C(2^+)$ $v_{C2} = v_C(2^+)$

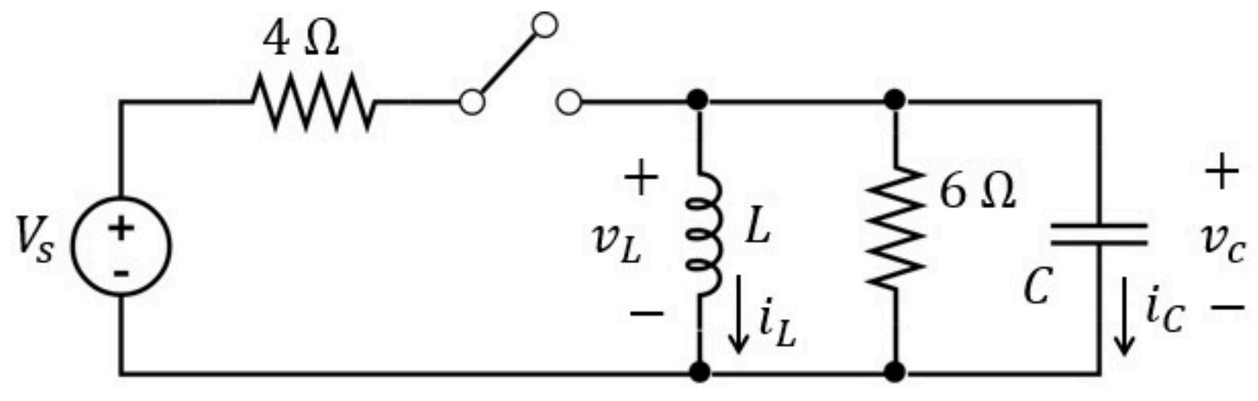

Given Variables:

Vs : 8 V

C : 2 nF

L : 2 mH

Calculate the following:

iL1 (A) :

2 ✓

vL1 (V) :

0 ✓

iC1 (A) :

0 ✓

vC1 (V) :

0 ✓

iL2 (A) :

2 ✓

vL2 (V) :

0 ✓

iC2 (A) :

-2 ✓

vC2 (V) :

0 ✓

Hint: In steady state, the capacitor and inductor behave as an open and short respectively.

The switch opens at time t = 2 s. Before the switch opens, the system has reached steady state.

Find these voltages and currents (i.e., just before the switch opens):

$i_{L1} = i_L(2^-)$ $v_{L1} = v_L(2^-)$ $i_{C1} = i_C(2^-)$ $v_{C1} = v_C(2^-)$

Find these voltages and currents (i.e., just after the switch opens):

$i_{L2} = i_L(2^+)$ $v_{L2} = v_L(2^+)$ $i_{C2} = i_C(2^+)$ $v_{C2} = v_C(2^+)$

Vs : 20 V

C : 2 nF

L : 1 mH

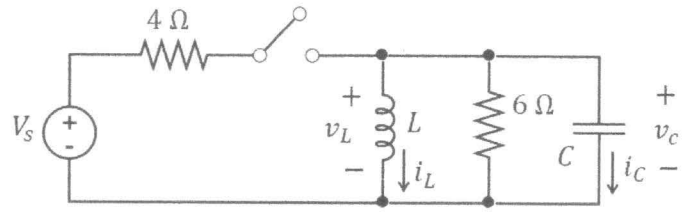

(a) $t = 2^-$: SWITCH IS CLOSED

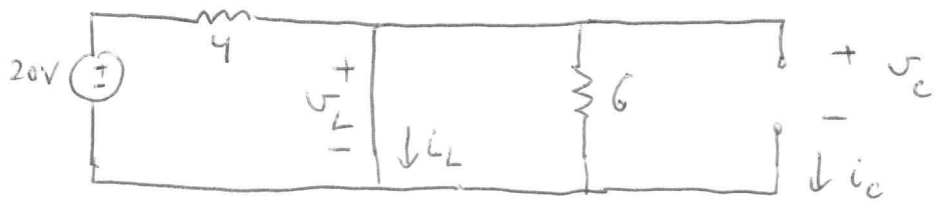

$i_L = \frac{20}{4} = 5$

$\boxed{v_L(2^-) = 0V}$ $\boxed{i_c(2^-) = 0A}$ $\boxed{v_c(2^-) = 0V}$ $\boxed{i_L(0^-) = 5A}$

(b) $t = 2^+$

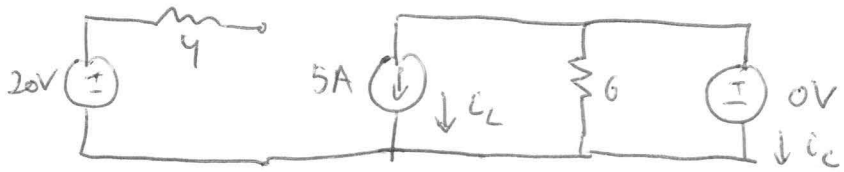

$\boxed{i_L(2^+) = 5A}$ $\boxed{v_c(2^+) = 0V}$ $\boxed{v_L(2^+) = 0V}$ $\boxed{i_c(2^+) = -5A}$

PP First order circuits 001

Unlimited Attempts.

The switch has been in position A for a long time.
At time $t = 0$, the switch moves to position B.

Find $v(t) = D$ for $t = 0^-$

$= A \cdot e^{-t/tau} + B$ for $t > 0$

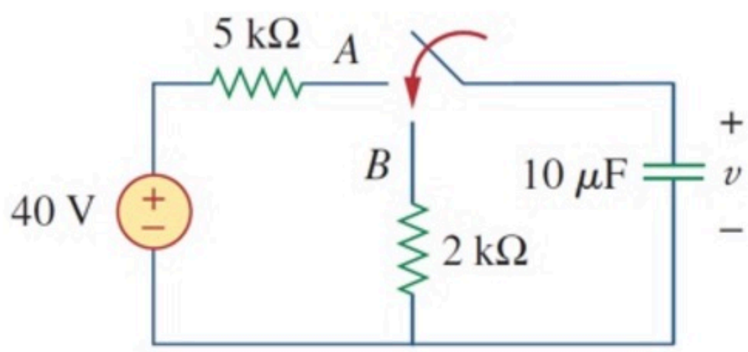

Given Variables:

. . . .

Calculate the following:

D (V) :

40 ✓

A (V) :

40 ✓

B (V) :

0 ✓

tau (s) :

0.02 ✓

Hint: At steady state, the capacitor is an open circuit

PP First order circuits 002

Unlimited Attempts.

The switch has been closed for a long time.
At time $t = 0$, the switch is opened.

Find $i_1(t) = D$ for $t = 0^-$

$= A \cdot e^{-t/tau} + B$ for $t > 0$

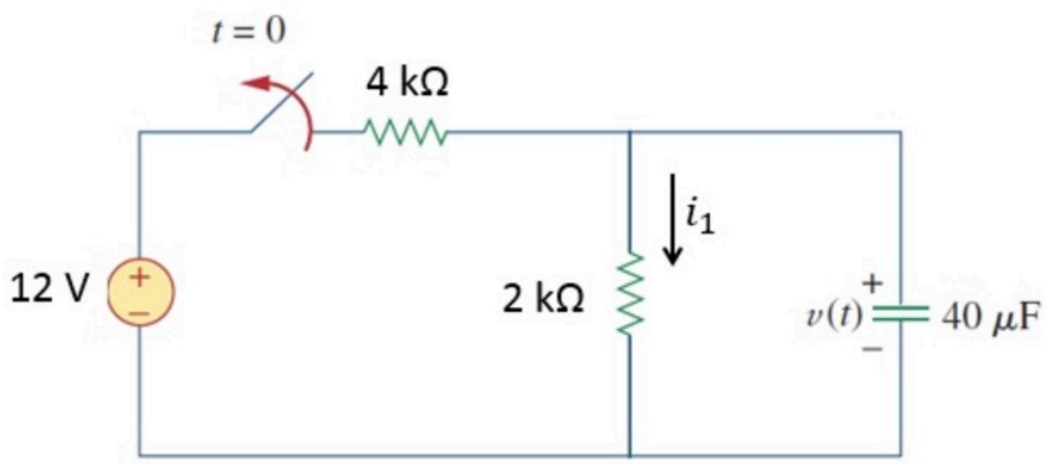

Given Variables:

. : . .

Calculate the following:

D (mA) :

2

A (mA) :

2

B (mA) :

0

tau (ms) :

80

Hint: The capacitor voltage does not change instantaneously

PP First order circuits 003

Unlimited Attempts.

What is the time constant tau in this circuit?

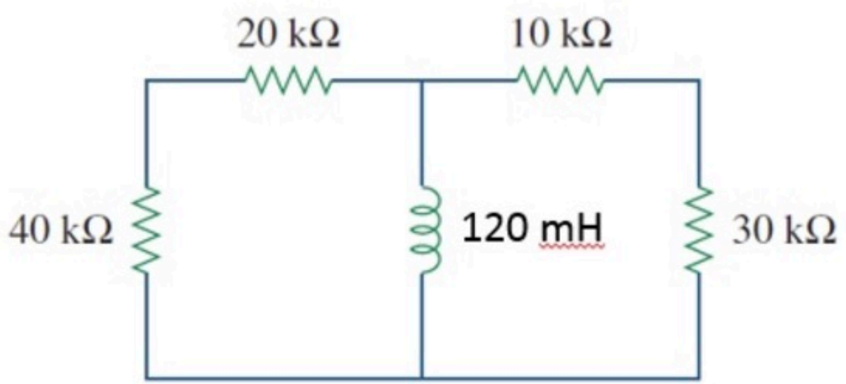

Given Variables:

. : . .

Calculate the following:

tau (us) :

5 ✓

Hint: Find Req

PP First order circuits 004

Unlimited Attempts.

The switch has been in position A for a long time. At time t = 0, the switch moves to position B.

Find $v_1(t) = D1$ for $t = 0^-$

$= A1 \cdot e^{-t/tau1} + B1$ for $t > 0$

Find $i_2(t) = D2$ for $t = 0^-$

$= A2 \cdot e^{-t/tau2} + B2$ for $t > 0$

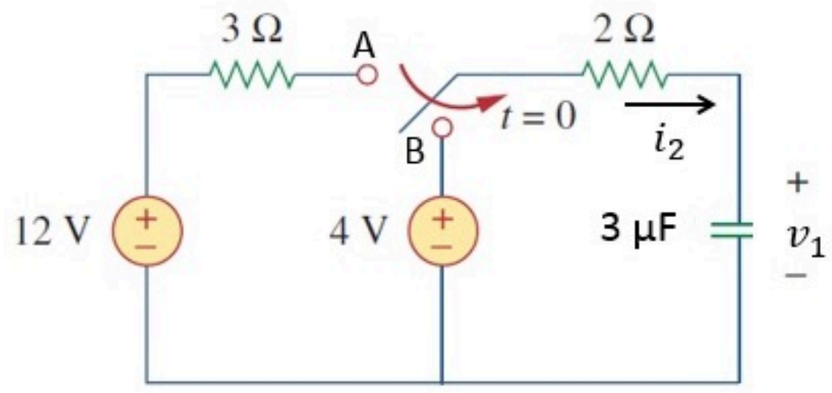

Given Variables:

. : . .

Calculate the following:

D1 (V) :

12 ✓

A1 (V) :

8 ✓

B1 (V) :

4 ✓

tau1 (us) :

6 ✓

D2 (A) :

0 ✓

A2 (A) :

-4 ✓

B2 (A) :

0 ✓

tau2 (us) :

6 ✓

Hint: Find the capacitor voltage before and after the switch

PP First order circuits 005

Unlimited Attempts.

The switch has been closed for a long time.
At time $t = 0$, the switch is opened.

Find $i_1(t) = D$ for $t = 0^-$

$= A \cdot e^{-t/tau} + B$ for $t > 0$

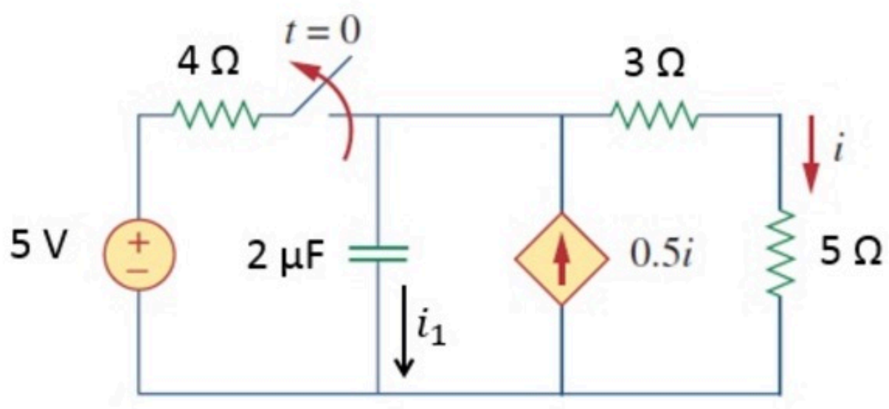

Given Variables:

. : . .

Calculate the following:

D (A) :

0

A (A) :

-0.25

B (A) :

0

tau (us) :

32

Hint: Use a test source to find Req.

PP First order circuits 006

Unlimited Attempts.

The switch has been open for a long time.
At time $t = 0$, the switch is closed.

Find $i_x(t) = D$ for $t = 0^-$

$= A \cdot e^{-t/tau} + B$ for $t > 0$

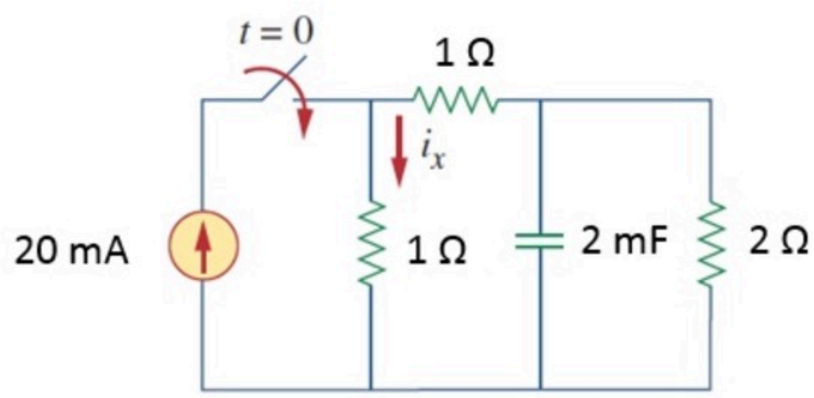

Given Variables:

. : . .

Calculate the following:

D (mA) :

0 ✓

A (mA) :

-5 ✓

B (mA) :

15 ✓

tau (ms) :

2 ✓

Hint: What is the capacitor voltage right after the transition?

PP First order circuits 007

Unlimited Attempts.

The switch has been open for a long time.
At time $t = 0$, the switch is closed.

Find $v_1(t) = D$ for $t = 0^-$

$= A \cdot e^{-t/tau} + B$ for $t > 0$

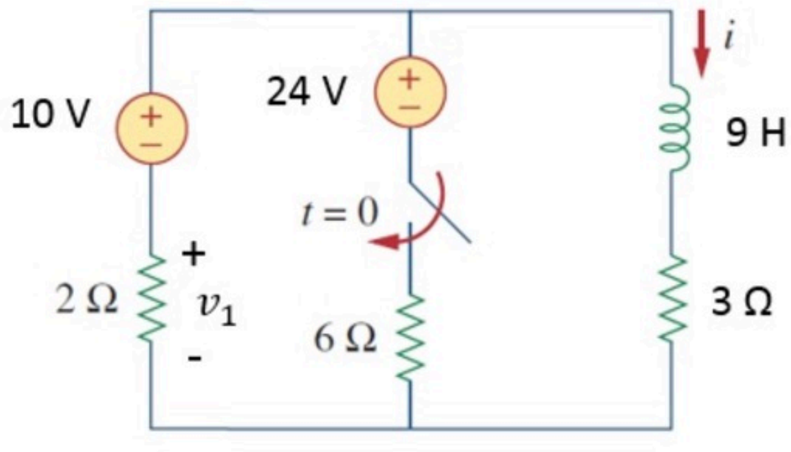

Given Variables:

. : . .

Calculate the following:

D (V) :

-4 ✓

A (V) :

1.5 ✓

B (V) :

-1 ✓

tau (s) :

2 ✓

Hint: First find the inductor current just before the switch opens.

PP First order circuits 008

Unlimited Attempts.

The switch has been in position A for a long time.
At time $t = 0$, the switch moves to position B.

Find $i_1(t) = D$ for $t = 0^-$

$= A \cdot e^{-t/tau} + B$ for $t > 0$

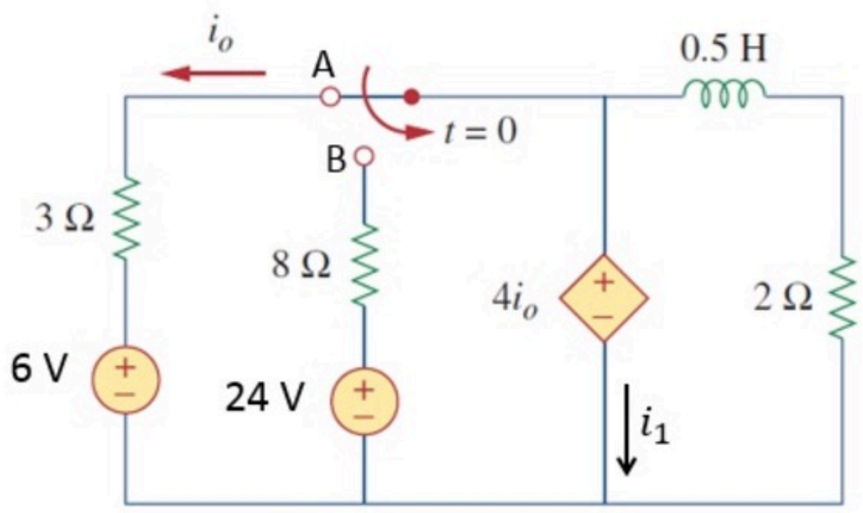

Given Variables:

. : . .

Calculate the following:

D (A) :

-18 ✓

A (A) :

-12 ✓

B (A) :

3 ✓

tau (s) :

0.25 ✓

Hint: What is io after the switch opens?

PP First order circuits 009

Unlimited Attempts.

The switch has been open for a long time.
At time $t = 0$, the switch is closed.

Find $i_1(t) = D$ for $t = 0^-$

$= A \cdot e^{-t/tau} + B$ for $t > 0$

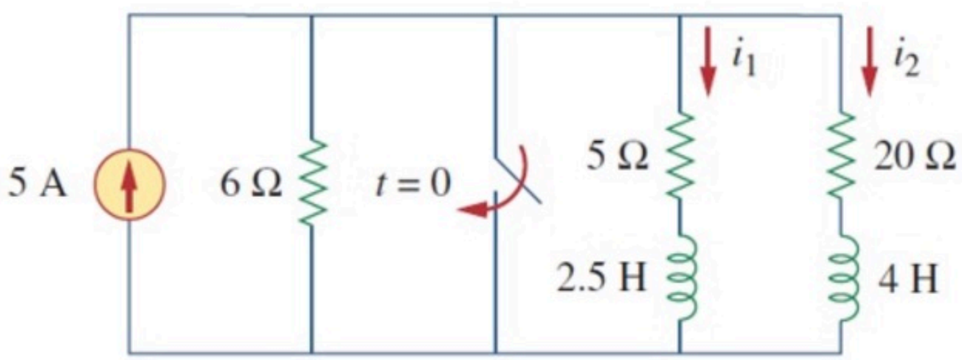

Given Variables:

. : . .

Calculate the following:

D (A) :

2.4 ✓

A (A) :

2.4 ✓

B (A) :

0 ✓

tau (s) :

0.5 ✓

Hint: After the switch closes, do the two inductors influence each other?

PP First order circuits 010

Unlimited Attempts.

The current source behaves as shown (and assume it has been zero for a long time for $t < 0$).

Find $v(t) = D$ for $t = 2^{-}$ ms

$= A \cdot e^{-(t-2\,ms)/tau} + B$ for $t > 2$ ms

Note, for your calculations, use: $e^{-1/1.5} \approx 0.5$

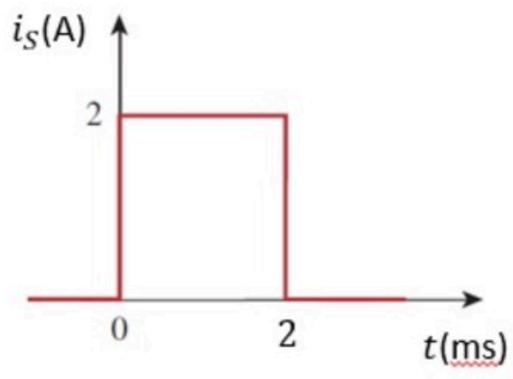

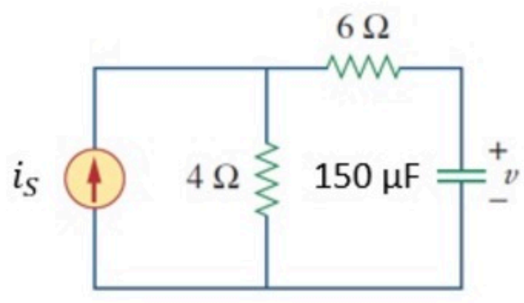

Given Variables:

. : . .

Calculate the following:

D (V) :

6 ✓

A (V) :

6 ✓

B (V) :

0 ✓

tau (ms) :

1.5 ✓

Hint: Find the result of the first transition first.

PP Second order circuits 001

Unlimited Attempts.

Find $i_1 = i(0^-)$ and $v_1 = v(0^-)$

Find $i_2 = i(0^+)$ and $v_2 = v(0^+)$

Find $i_3 = i(\infty)$ and $v_3 = v(\infty)$

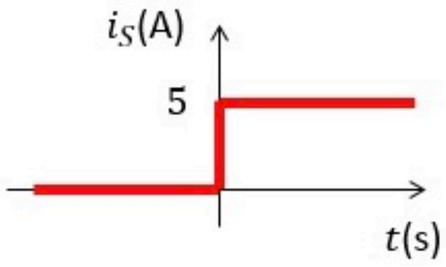

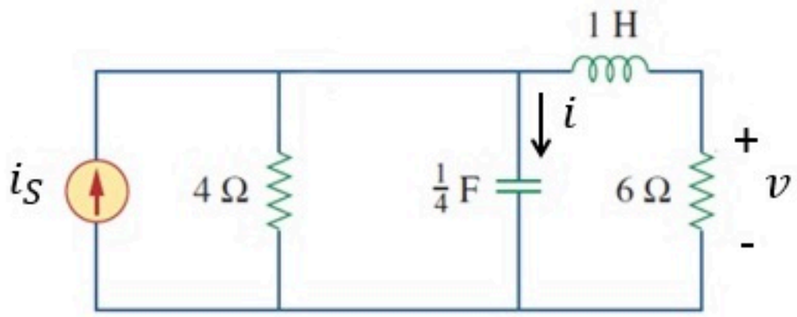

Given Variables:

. : . .

Calculate the following:

i1 (A) :

0 ✓

v1 (V) :

0 ✓

i2 (A) :

5 ✓

v2 (V) :

0 ✓

i3 (A) :

0 ✓

v3 (V) :

12 ✓

Hint: Capacitors and inductors in steady state behave as opens and shorts.

PP Second order circuits 002

Unlimited Attempts.

Find $i_1 = i(0^-)$ and $v_1 = v(0^-)$

Find $i_2 = i(0^+)$ and $v_2 = v(0^+)$

Find $i_3 = i(\infty)$ and $v_3 = v(\infty)$

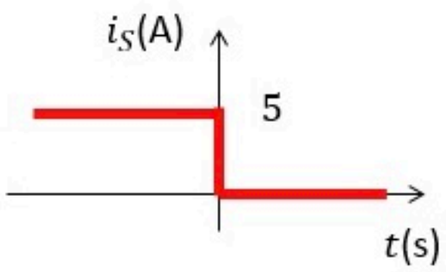

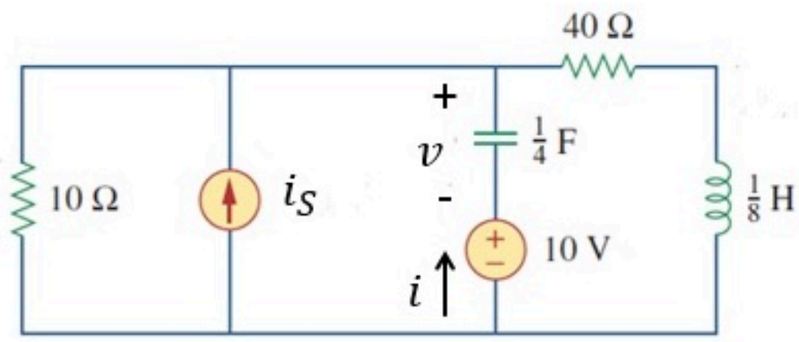

Given Variables:

. : . .

Calculate the following:

i1 (A) :

0 ✓

v1 (V) :

30 ✓

i2 (A) :

5 ✓

v2 (V) :

30 ✓

i3 (A) :

0 ✓

v3 (V) :

-10 ✓

Hint: Capacitors and inductors in steady state behave as opens and shorts.

Complex numbers 001

Problem has been graded.

$$\frac{\mathbf{V_1} + 6j}{2j} + \frac{\mathbf{V_1}}{-cj} + \frac{\mathbf{V_1}}{c} = 0$$

Find $\mathbf{V_1}$ in cartesian coordinates, i.e., find a and b:

$$\mathbf{V_1} = a + bj$$

Solve without a calculator

Given Variables:

c : 4 .

Calculate the following:

a (.) :

-6 ✓

b (.) :

-6 ✓

Hint: Solve in cartesian coordinates.

$$\frac{\mathbf{V_1} + 6j}{2j} + \frac{\mathbf{V_1}}{-cj} + \frac{\mathbf{V_1}}{c} = 0$$

c : 4

Find $\mathbf{V_1}$ in cartesian coordinates, i.e., find a and b:

$\mathbf{V_1} = a + bj$

$$\frac{V_1 + 6j}{2j} + \frac{V_1}{-4j} + \frac{V_1}{4} = 0$$

$$\frac{2V_1 + 12j}{4j} + \frac{(-V_1)}{4j} + \frac{V_1 \cdot j}{4j} = 0$$

$$V_1 + jV_1 = -12j$$

$$V_1 = -\frac{12j}{1+j} \cdot \frac{1-j}{1-j} = \frac{-12(j+1)}{1+1} = -6(1+j)$$

$$\boxed{a = -6}$$

$$\boxed{b = -6}$$

Complex numbers 002

Problem has been graded.

Find A_1 and B_1.

$$\mathbf{V_1} = b\sqrt{2} \cdot j \qquad \mathbf{Z_1} = \left(aj + \frac{a}{1+j}\right)^{-1} \qquad \mathbf{I_1} = \frac{\mathbf{V_1}}{\mathbf{Z_1}}$$

$\mathbf{I_1} = A_1 \cdot e^{jB_1}$ with $0 \leq A_1$ and $-180° \leq B_1 \leq 180$

Solve without a calculator

Given Variables:

a : 1 .

b : 2 .

Calculate the following:

A1 (.) :

2 ✓

B1 (degrees) :

135 ✓

> Hint: Write Z1 in polar coordinates.

Find A_1 and B_1.

a : 2 .

b : 2 .

$$\mathbf{V_1} = b\sqrt{2} \cdot j \qquad \mathbf{Z_1} = \left(aj + \frac{a}{1+j}\right)^{-1} \qquad \mathbf{I_1} = \frac{\mathbf{V_1}}{\mathbf{Z_1}}$$

$\mathbf{I_1} = A_1 \cdot e^{jB_1}$ with $0 \leq A_1$ and $-180^\circ \leq B_1 \leq 180$

$$I_1 = \left(2\sqrt{2}\, j\right) \cdot Z^{-1}$$

$$= \left(2\sqrt{2}\, j\right)\left(2j + \frac{2}{1+j}\right)$$

$$= 4\sqrt{2}\, j \left(\frac{j \cancel{-1} \cancel{+1}}{1+j}\right)$$

$$= \frac{-4\sqrt{2}}{1+j}$$

$$= \frac{4\sqrt{2}\, e^{j\pi}}{\frac{2}{\sqrt{2}}\, e^{j\frac{\pi}{4}}}$$

$$= 4\, e^{j\frac{3\pi}{4}}$$

$$\boxed{A_1 = 4}$$

$$\boxed{B_1 = 135^\circ}$$

Complex numbers 003

Problem has been graded.

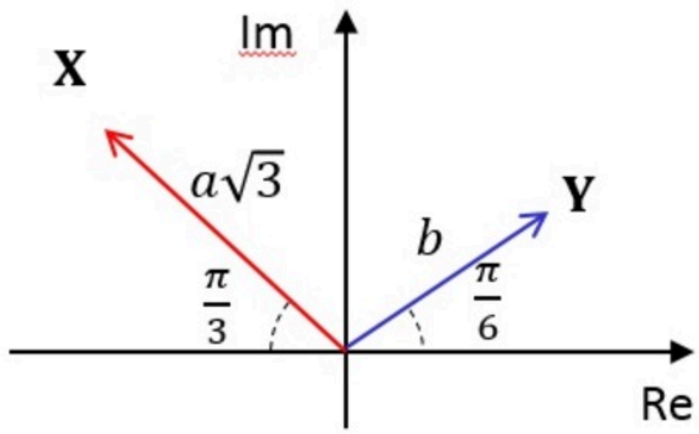

$$\mathbf{A} = \mathbf{X} + \mathbf{Y}$$

Find $d = |\mathbf{A}|^2$

Solve without a calculator.

Given Variables:

a : 1 .

b : 3 .

Calculate the following:

d (.) :

12 ✓

Hint: Convert to cartesian coordinates

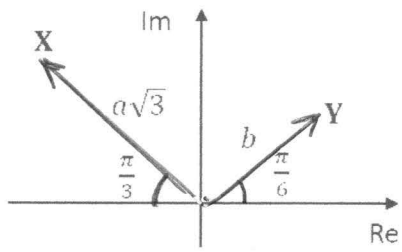

a : 1 .

b : 3 .

$\mathbf{A} = \mathbf{X} + \mathbf{Y}$

Find $d = |\mathbf{A}|^2$

$$X = \sqrt{3}\, e^{j\frac{2\pi}{3}} = \sqrt{3}\left(-\frac{1}{2} + \frac{\sqrt{3}}{2} j\right) = -\frac{\sqrt{3}}{2} + \frac{3}{2} j$$

$$Y = 3\, e^{j\frac{\pi}{6}} = 3\left(\frac{\sqrt{3}}{2} + \frac{j}{2}\right) = \frac{3\sqrt{3}}{2} + \frac{3}{2} j$$

$$A = X + Y = \frac{2\sqrt{3}}{2} + \frac{6}{2} j = \sqrt{3} + 3j$$

$$|A|^2 = (\sqrt{3})^2 + (3)^2 = 3 + 9 = 12$$

$$\boxed{d = 12}$$

Complex numbers 004

Problem has been graded.

$$\frac{\mathbf{V_1} + 4j}{j} - \frac{\mathbf{V_1} + 4j}{cj} + \frac{\mathbf{V_1}}{-4j} + \frac{\mathbf{V_1}}{4} = 0$$

Find $\mathbf{V_1}$ in cartesian coordinates, i.e., find a and b:

$$\mathbf{V_1} = a + bj$$

Solve without a calculator

Given Variables:

c : 2 .

Calculate the following:

a (.) :

-4 ✓

b (.) :

-4 ✓

Hint: Solve in cartesian coordinates.

$$\frac{\mathbf{V_1}+4j}{j}-\frac{\mathbf{V_1}+4j}{cj}+\frac{\mathbf{V_1}}{-4j}+\frac{\mathbf{V_1}}{4}=0$$

c : 2 .

Find $\mathbf{V_1}$ in cartesian coordinates, i.e., find a and b:

$\mathbf{V_1} = a + bj$

$$\frac{V_1+4j}{j}-\frac{V_1+4j}{2j}+\frac{V_1}{-4j}+\frac{V_1}{4}=0$$

$$\frac{4V_1+16j}{4j}+\frac{(-2V_1-8j)}{4j}+\frac{(-V_1)}{4j}+\frac{(V_1 j)}{4j}=0$$

$$V_1+jV_1+8j=0$$

$$V_1=\frac{-8j}{1+j}\cdot\left(\frac{1-j}{1-j}\right)$$

$$V_1=\frac{-8j-8}{1+1}=-4-4j$$

$$\boxed{a=-4}$$

$$\boxed{b=-4}$$

Complex numbers 005

Problem has been graded.

Hint: Solve this symbolically as much as you can and only plug in numbers at the very end.

Find P and Q.

Note: We've used bold capital letters to denote complex variables. The * operator stands for complex conjugate. The Re[] and Im[] operators stand for taking the real part and imaginary part respectively.

Solve without a calculator

$$\mathbf{V_1} = be^{j\frac{\pi}{3}} \qquad \mathbf{Z_1} = a - aj \qquad \mathbf{I_1} = \frac{\mathbf{V_1}}{\mathbf{Z_1}}$$

$$\mathbf{S} = \frac{1}{2} \cdot \mathbf{V_1} \cdot \mathbf{I_1^*} \qquad P = \mathrm{Re}[\mathbf{S}] \qquad Q = \mathrm{Im}[\mathbf{S}]$$

Given Variables:

a : 1 .

b : 2 .

Calculate the following:

P (.) :

1 ✓

Q (.) :

-1 ✓

Hint: Work this out symbolically first and only plug in numbers later.

Find P and Q.

a : 2 .

b : 4 .

Note: We've used bold capital letters to denote complex variables. The * operator stands for complex conjugate. The Re[] and Im[] operators stand for taking the real part and imaginary part respectively.

$$\mathbf{V}_1 = be^{j\frac{\pi}{3}} \qquad \mathbf{Z}_1 = a - aj \qquad \mathbf{I}_1 = \frac{\mathbf{V}_1}{\mathbf{Z}_1}$$

$$\mathbf{S} = \frac{1}{2} \cdot \mathbf{V}_1 \cdot \mathbf{I}_1^* \qquad P = \mathrm{Re}[\mathbf{S}] \qquad Q = \mathrm{Im}[\mathbf{S}]$$

$$S = \frac{1}{2} V_1 I_1^* = \frac{1}{2} V_1 \frac{V_1^*}{Z_1^*} = \frac{1}{2} \frac{|V_1|^2}{Z_1^*}$$

$$S = \frac{1}{2} \cdot \frac{4^2}{2+2j} = \frac{4^2}{2 \cdot 2} \frac{1}{1+j} \frac{1-j}{1-j} = 4 \frac{(1-j)}{1+1} = 2(1-j)$$

$$\boxed{P = 2}$$

$$\boxed{Q = -2}$$

Complex numbers 006

Problem has been graded.

Hint: Solve this symbolically as much as you can and only plug in numbers at the very end.

Find P and Q.

Note: We've used bold capital letters to denote complex variables. The * operator stands for complex conjugate. The Re[] and Im[] operators stand for taking the real part and imaginary part respectively.

Solve without a calculator

$$\mathbf{V_0} = ae^{j\frac{\pi}{6}} \qquad \mathbf{Z_1} = 2 + j \qquad \mathbf{Z_2} = bj$$

$$\mathbf{I_1} = \frac{\mathbf{V_0}}{\mathbf{Z_1}} \qquad \mathbf{V_1} = \mathbf{Z_2} \cdot \mathbf{I_1} \qquad \mathbf{S} = \frac{1}{2} \cdot \mathbf{V_1} \cdot \mathbf{I_1^*}$$

$$P = \mathrm{Re}[\mathbf{S}] \qquad Q = \mathrm{Im}[\mathbf{S}]$$

Given Variables:

a : 2 .

b : 1 .

Calculate the following:

P (.) :

0 ✓

Q (.) :

0.4 ✓

Hint: Work this out symbolically first and only plug in numbers later.

Find P and Q.

a : 2 .

b : 1 .

Note: We've used bold capital letters to denote complex variables. The * operator stands for complex conjugate. The Re[] and Im[] operators stand for taking the real part and imaginary part respectively.

$$\mathbf{V}_0 = ae^{j\frac{\pi}{6}} \qquad \mathbf{Z}_1 = 2 + j \qquad \mathbf{Z}_2 = bj$$

$$\mathbf{I}_1 = \frac{\mathbf{V}_0}{\mathbf{Z}_1} \qquad \mathbf{V}_1 = \mathbf{Z}_2 \cdot \mathbf{I}_1 \qquad \mathbf{S} = \frac{1}{2} \cdot \mathbf{V}_1 \cdot \mathbf{I}_1^*$$

$$P = \mathrm{Re}[\mathbf{S}] \qquad Q = \mathrm{Im}[\mathbf{S}]$$

$$S = \frac{1}{2} V_1 I_1^* = \frac{1}{2} Z_2 I_1 \cdot I_1^* = \frac{1}{2} \cdot j \, |I_1|^2$$

$$I_1 = \frac{V_0}{Z_1} \Rightarrow |I_1|^2 = \frac{|V_0|^2}{|Z_1|^2} = \frac{a^2}{4+1} = \frac{4}{5}$$

$$\Rightarrow S = \frac{1}{2} \cdot j \cdot \frac{4}{5} = j \cdot \frac{4}{10}$$

$$\boxed{P = 0}$$

$$\boxed{Q = 0.4}$$

Phasors 001

Problem has been graded.

$$v_1(t) = B\cos(200t + D_1) \quad \text{with } -180° \le D_1 \le 180°$$
$$v_2(t) = B\sin(200t + D_2) \quad \text{with } -180° \le D_2 \le 180°$$

Find D_1 and D_2.

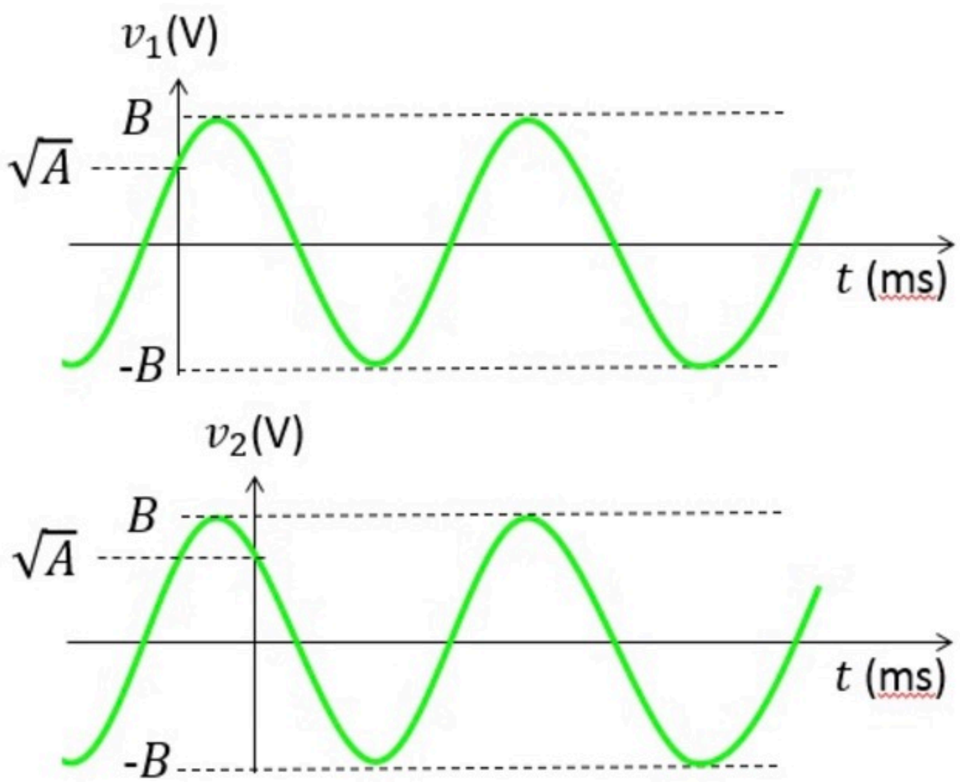

Given Variables:

A : 9 V^2

B : 6 V

Calculate the following:

D1 (degrees) :

-60 ✓

D2 (degrees) :

150 ✓

Hint: Look on the graph to disambiguate.

$v_1(t) = B\cos(200t + D_1)$ with $-180° \le D_1 \le 180°$

$v_2(t) = B\sin(200t + D_2)$ with $-180° \le D_2 \le 180°$

A : 3 V^2

B : 2 V

Find D_1 and D_2.

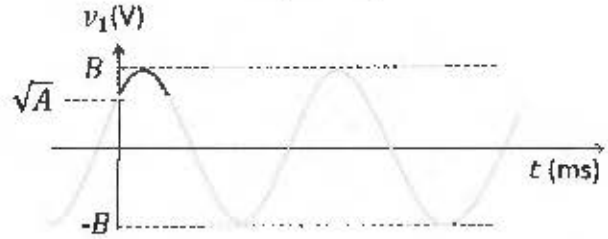

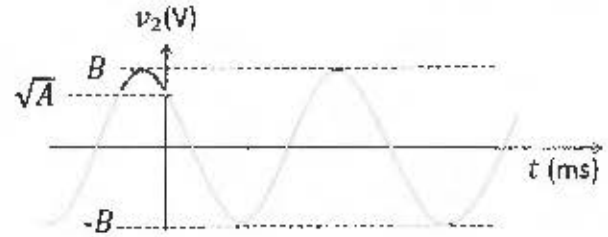

① PLUG IN $t=0$ $\quad v_1(0) = 2 \cdot \cos(D_1) = \sqrt{3} \Rightarrow \cos(D_1) = \frac{\sqrt{3}}{2}$

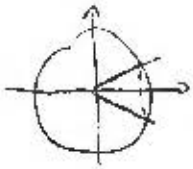

$D_1 = 30°$

or

$D_1 = -30°$

WE KNOW THAT $\cos(\omega(t-t_0)) = \cos(\omega t + \phi)$

$\phi = -\omega t_0$

HERE $t_0 > 0 \Rightarrow \phi < 0 \Rightarrow$ $\boxed{D_1 = -30 \text{ degrees}}$

② ⊛ OPTION 1: WRITE AS COS() FIRST

$v_2(t) = B\cos(200t + \alpha) \Rightarrow v_2(0) = 2\cos(\alpha) = \sqrt{3}$

$\Rightarrow \alpha = 30°$ or $-30°$ $\qquad$ HERE $t_0 < 0 \Rightarrow \phi > 0 \Rightarrow \alpha = 30°$

$v_2(t) = B\cos(200t + 30°) = B\sin(200t + 30° + 90°) \Rightarrow \boxed{D_2 = 120°}$

⊛ OPTION 2: $v_2(0) = 2\sin(D_2) = \sqrt{3} \Rightarrow \sin(D_2) = \frac{\sqrt{3}}{2}$

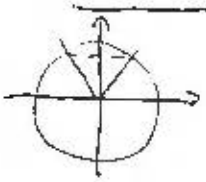

$D_2 = 60°$

or

$D_2 = 180° - 60° = 120°$

$\Rightarrow$ LOOK AT THE GRAPH

SIN() SHIFTED MORE THAN 90°

$\Rightarrow \boxed{D_2 = 120°}$

Phasors 002

Problem has been graded.

Express the current as a time waveform

$$i(t) = A_1 \cdot \cos(2\pi f_1 \cdot t + B_1)$$

with $0 \leq A_1$ and $-180° \leq B_1 \leq 180°$

and as a phasor

$$\mathbf{I} = A_2 \cdot e^{jB_2}$$ with $0 \leq A_2$ and $-180° \leq B_2 \leq 180°$

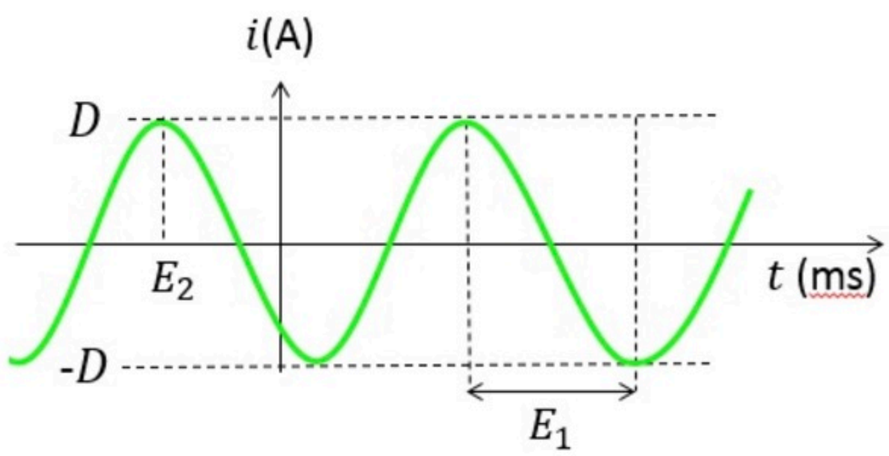

Given Variables:

D : 5 A

E1 : 1 ms

E2 : -0.7 ms

Calculate the following:

f1 (1/s) :

500 ✓

A1 (A) :

5 ✓

B1 (degrees) :

126 ✓

A2 (A) :

5 ✓

B2 (degrees) :

126 ✓

Hint: How does phase relate to time delay?

Express the current as a time waveform

$$i(t) = A_1 \cdot \cos(2\pi f_1 \cdot t + B_1)$$

with $0 \le A_1$ and $-180° \le B_1 \le 180°$

and as a phasor

$$\mathbf{I} = A_2 \cdot e^{jB_2} \quad \text{with} \quad 0 \le A_2 \quad \text{and} \quad -180° \le B_2 \le 180°$$

D : 6 A

E1 : 2 ms

E2 : -1.7 ms

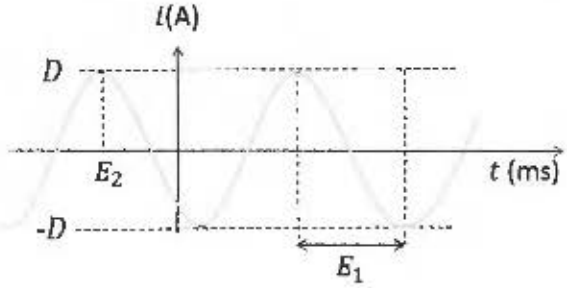

$$T = 2 \cdot E_1 = 4\ ms \Rightarrow f_1 = \frac{1}{T} = \frac{1000}{4} = 250$$

$$\boxed{f_1 = 250\ s^{-1}}$$

$$A_1 = A_2 = D \Rightarrow \boxed{A_1 = 6A} \quad \boxed{A_2 = 6A}$$

$$\phi = -\omega t_0 = -\frac{2\pi}{T} \cdot E_2 = \frac{-2\pi}{4\ \cancel{ms}} \cdot (-1.7\ \cancel{ms}) = \frac{\pi \cdot 1.7}{2}\ rad$$

$$\phi = \frac{180° \cdot 1.7}{2} = 90° \cdot 1.7 = (9 \cdot 17)° = 153°$$

$$\boxed{B_1 = 153°} \quad \boxed{B_2 = 153°}$$

Phasors 003

Problem has been graded.

Consider the sinusoids:

$$i_1(t) = 12\cos(10t + A_1)$$

$$i_2(t) = 12\sin(10t + A_2)$$

The corresponding phasors are:

$$\mathbf{I_1} = 12e^{jB_1} \quad \text{with } -180° \leq B_1 \leq 180°$$

$$\mathbf{I_2} = 12e^{jB_2} \quad \text{with } -180° \leq B_2 \leq 180°$$

Find B_1 and B_2.

Given Variables:

A1 : 35 degrees

A2 : 45 degrees

Calculate the following:

B1 (degrees) :

35 ✓

B2 (degrees) :

-45 ✓

Hint: Convert the sine to cosine first.

Consider the sinusoids:

$$i_1(t) = 12\cos(10t + A_1)$$
$$i_2(t) = 12\sin(10t + A_2)$$

A1 : 55 degrees

A2 : 20 degrees

The corresponding phasors are:

$$\mathbf{I_1} = 12e^{jB_1} \quad \text{with } -180° \le B_1 \le 180°$$
$$\mathbf{I_2} = 12e^{jB_2} \quad \text{with } -180° \le B_2 \le 180°$$

Find B_1 and B_2.

$$i_1(t) = 12\cos(10t + 55°) \Rightarrow I_1 = 12e^{j55°}$$

$$\boxed{B_1 = 55°}$$

$$i_2(t) = 12\sin(10t + 20°)$$
$$= 12\cos(10t + 20° - 90°)$$
$$= 12\cos(10t - 70°) \Rightarrow I_2 = 12e^{-j70°}$$

$$\boxed{B_2 = -70°}$$

Phasors 004

Problem has been graded.

You are given $v_S = A_1 \cdot \sqrt{2} \cdot cos\,(100t + B_1)$

$v_C = A_2 \cdot cos\,(100t + B_2)$

Find $v_R = A_3 \cdot cos\,(100t + B_3)$ with $-180° \leq B_3 \leq 180°$

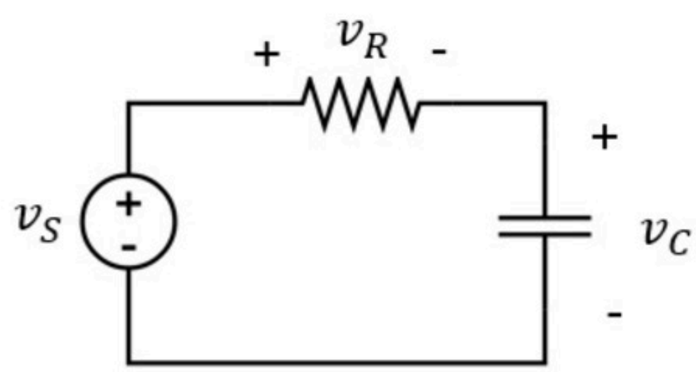

Solve without using a calculator.

Given Variables:

A1 : 4 V

B1 : 20 degrees

A2 : 4 V

B2 : -25 degrees

Calculate the following:

A3 (V) :

4 ✓

B3 (degrees) :

65 ✓

Hint: Convert to phasors. Multiply out the common exp(jB) factor.

You are given $v_S = A_1 \cdot \sqrt{2} \cdot cos\,(100t + B_1)$

$v_C = A_2 \cdot cos\,(100t + B_2)$

Find $v_R = A_3 \cdot cos\,(100t + B_3)$ with $-180° \leq B_3 \leq 180°$

A1 : 2 V

B1 : 35 degrees

A2 : 2 V

B2 : -10 degrees

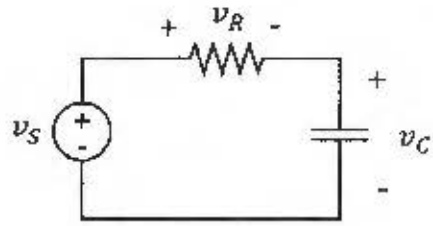

Solve without using a calculator.

$$V_S = 2\sqrt{2}\, e^{j35°} \qquad V_C = 2\, e^{-j10°}$$

$$\text{KVL:} \quad V_R = V_S - V_C = 2\sqrt{2}\, e^{j35°} - 2\, e^{-j10°}$$

$$= 2\, e^{j35°}\left(\sqrt{2} - e^{-j45°}\right)$$

$$= 2\, e^{j35°}\left(\sqrt{2} - \left(\frac{\sqrt{2}}{2} - j\frac{\sqrt{2}}{2}\right)\right)$$

$$= 2\, e^{j35°}\left(\frac{\sqrt{2}}{2} + j\frac{\sqrt{2}}{2}\right)$$

$$= 2\, e^{j35°}\, e^{j45°}$$

$$= 2\, e^{j80°}$$

$$\Rightarrow \quad v_R = 2\cos(100t + 80°)$$

$$\boxed{A_3 = 2V} \qquad \boxed{B_3 = 80°}$$

Phasors 005

Unlimited Attempts.

Each voltage-current pair below is the voltage across an element and the current through that element, adhering to the passive sign convention (ω is in units of rad/s).

$$v_1(t) = A_1 \cdot \cos(400t + 25°) \qquad i_1(t) = B_1 \cdot \sin(400t + 25°)$$
$$v_2(t) = A_2 \cdot \sin(500t + 70°) \qquad i_2(t) = B_2 \cdot \sin(500t + 160°)$$
$$v_3(t) = A_3 \cdot \cos(700t + 30°) \qquad i_3(t) = B_3 \cdot \sin(700t + 120°)$$

For each element:

a) Indicate the type of element. Enter 1 for resistor, 2 for inductor, and 3 for capacitor.
b) Find the value of the element. Assume the units are mΩ, mH or mF respectively.

Given Variables:

A1 : 12 V
B1 : 3 A
A2 : 20 V
B2 : 4 A
A3 : 2 V
B3 : 4 A

Calculate the following:

Type 1 (.) :

2 ✓

Value 1 (.) :

10 ✓

Type 2 (.) :

3 ✓

Value 2 (.) :

0.4 ✓

Type 3 (.) :

1 ✓

Value 3 (.) :

500 ✓

Hint: Convert to phasors and check if current lags or leads.

Each voltage-current pair below is the voltage across an element and the current through that element, adhering to the passive sign convention.

$v_1(t) = A_1 \cdot \cos(400t + 25)$ $\quad i_1(t) = B_1 \cdot \sin(400t + 25)$

$v_2(t) = A_2 \cdot \sin(500t + 70)$ $\quad i_2(t) = B_2 \cdot \sin(500t + 160)$

$v_3(t) = A_3 \cdot \cos(700t + 30)$ $\quad i_3(t) = B_3 \cdot \sin(700t + 120)$

For each element:

a) Indicate the type of element. Enter 1 for resistor, 2 for inductor, and 3 for capacitor.

b) Find the value of the element. Assume the units are mΩ, mH or mF respectively.

A1 : 16 V

B1 : 2 A

A2 : 32 V

B2 : 8 A

A3 : 3 V

B3 : 30 A

$\sin(\alpha) = \cos(\alpha - 90^\circ)$ $\qquad V = Z \cdot I$

$Z_L = j\omega L \Rightarrow \angle Z = 90^\circ$

$Z_C = \frac{1}{j\omega C} \Rightarrow \angle Z = -90^\circ$

$Z_R = R \Rightarrow \angle Z = 0^\circ$

(1) $V_1 = 16 e^{j25^\circ}$ $\qquad I_1 = 2 e^{j(25^\circ - 90^\circ)}$

$\angle Z_1 = \angle V_1 - \angle I_1 = 25^\circ - (25^\circ - 90^\circ) = 90^\circ \Rightarrow$ $\boxed{\text{INDUCTOR}}$

$|Z_1| = \frac{|V_1|}{|I_1|} = \frac{16}{2} = \omega L \Rightarrow L = \frac{16}{2} \cdot \frac{1}{400} \Rightarrow$ $\boxed{L = 20\ mH}$

(2) $V_2 = 32 e^{j(70^\circ - 90^\circ)}$ $\qquad I_2 = 8 e^{j(160^\circ - 90^\circ)}$

$\angle Z_2 = \angle V_2 - \angle I_2 = (70^\circ - 90^\circ) - (160^\circ - 90^\circ) = -90^\circ$

$\Rightarrow$ $\boxed{\text{CAPACITOR}}$

$|Z_2| = \frac{|V_2|}{|I_2|} = \frac{32}{8} = \frac{1}{\omega C} \Rightarrow C = \frac{1}{500} \cdot \frac{8}{32} \Rightarrow$ $\boxed{C = 0.5\ mF}$

(3) $V_3 = 3 e^{j30^\circ}$ $\qquad I_3 = 30 e^{j(120^\circ - 90^\circ)}$

$\angle Z_3 = \angle V_3 - \angle I_3 = 30^\circ - (120^\circ - 90^\circ) = 0^\circ \Rightarrow$ $\boxed{\text{RESISTOR}}$

$|Z_3| = \frac{|V_3|}{|I_3|} = \frac{3}{30} = R \Rightarrow R = \frac{1}{10} \Rightarrow$ $\boxed{R = 100\ m\Omega}$

Phasors 006

Problem has been graded.

Find the steady-state currents $i_1(t)$ and $i_2(t)$.

$i_1(t) = A_1$

$i_2(t) = A_2\cos(1000t + B_2)$ with $-180° < B_2 \leq 180°$

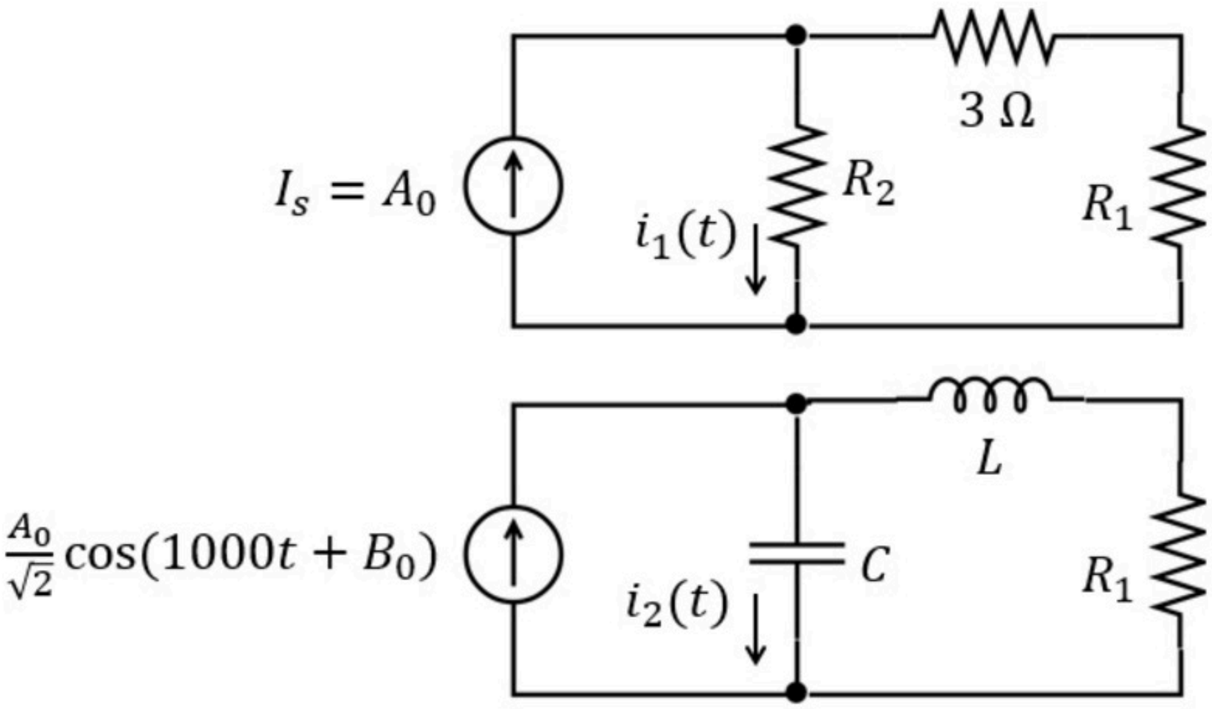

Given Variables:

A0 : 2 A

B0 : 25 degrees

C : 200 uF

L : 3 mH

R1 : 6 ohm

R2 : 3 ohm

Calculate the following:

A1 (A) :

1.5 ✓

A2 (A) :

1.5 ✓

B2 (degrees) :

70 ✓

Hint: Solve the second circuit with phasors.

Find the steady-state currents $i_1(t)$ and $i_2(t)$.

$i_1(t) = A_1$

$i_2(t) = A_2\cos(1000t + B_2)$ with $-180° < B_2 \leq 180°$

A0 : 2 A

B0 : 20 degrees

C : 250 uF

L : 4 mH

R1 : 4 ohm

R2 : 3 ohm

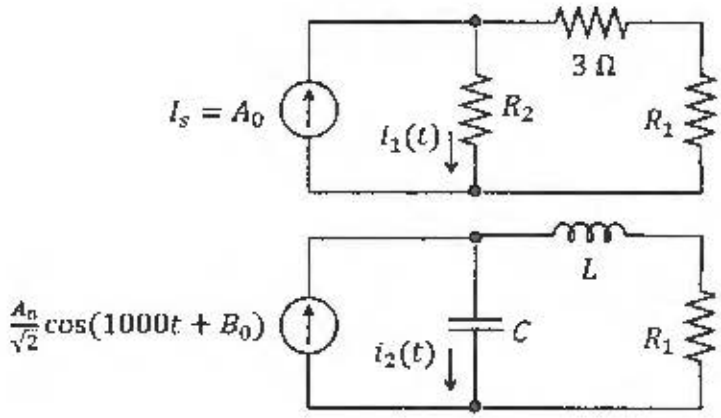

① CURRENT DIVIDER. $i_1 = 2 \cdot \frac{3+4}{3+4+3} = \frac{14}{10}$ $\boxed{A_1 = 1.4\ A}$

②

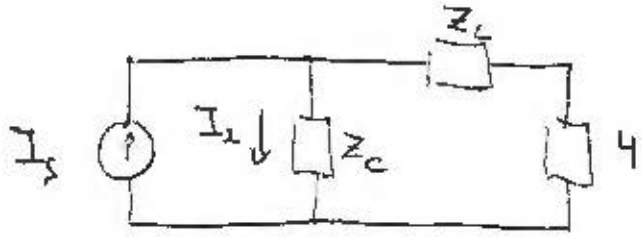

$Z_L = j\omega L = j\,1000 \cdot 4 \cdot 10^{-3}$
$= 4j$

$Z_C = \frac{1}{j\omega C} = \frac{1}{j\,1000 \cdot 250 \cdot 10^{-6}}$
$= -4j$

$I_s = \frac{2}{\sqrt{2}} \cdot e^{j20°}$

$I_2 = I_s \cdot \frac{4j+4}{4j+4-4j} = I_s \cdot \frac{\cancel{4}(1+j)}{\cancel{4}} = \frac{2}{\sqrt{2}} e^{j20°} \sqrt{2}\, e^{j45°}$

$I_2 = 2\, e^{j65°}$

$i_2(t) = 2\cos(1000t + 65°)$

$\boxed{A_2 = 2\ A}$

$\boxed{B_2 = 65°}$

Phasors 007

Problem has been graded.

$v_s(t) = A_1\sqrt{2} \cdot \cos(W_1 t + B_1)$

$i_s(t) = 2 \cdot \cos(W_1 t - 90°)$ A

Find steady state voltage

$v_c(t) = A_2\sqrt{2} \cdot \cos(W_2 t + B_2)$ with $-180° < B_2 \leq 180°$

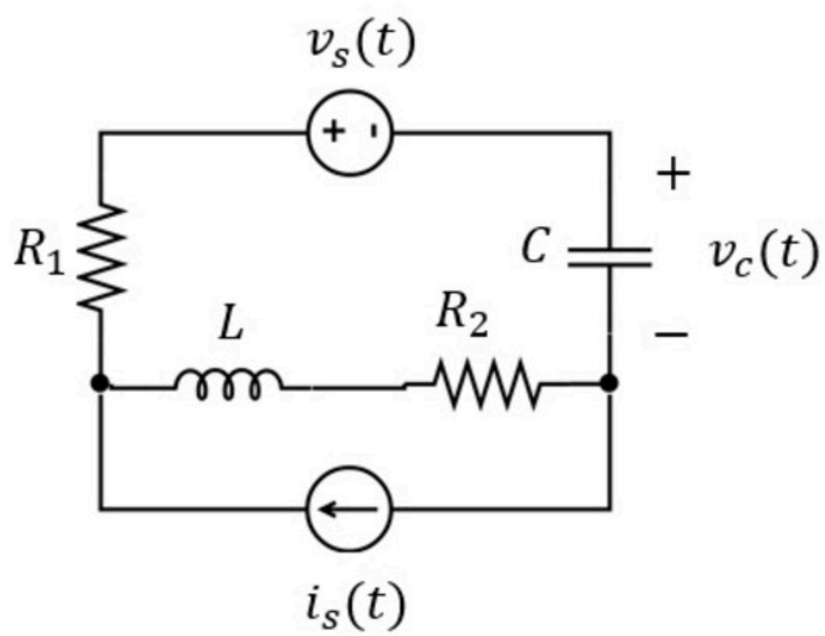

Given Variables:

A1 : 14 V

B1 : -45 degrees

W1 : 2000 (1/s)

C : 125 uF

L : 2 mH

R1 : 4 ohm

R2 : 4 ohm

Calculate the following:

A2 (V) :

3 ✓

B2 (degrees) :

45 ✓

W2 (1/s) :

2000 ✓

Hint: We do not need to use superposition, but we could if we wanted to.

$v_s(t) = A_1\sqrt{2}\cdot\cos(W_1 t + B_1)$

$i_s(t) = 2\cdot\cos(W_1 t - 90°)$ A

Find steady state voltage

$v_c(t) = A_2\sqrt{2}\cdot\cos(W_2 t + B_2)$ with $-180° < B_2 \le 180°$

A1 : 32 V

B1 : -45 degrees

W1 : 2000 1/s

C : 125 uF

L : 2 mH

R1 : 4 ohm

R2 : 4 ohm

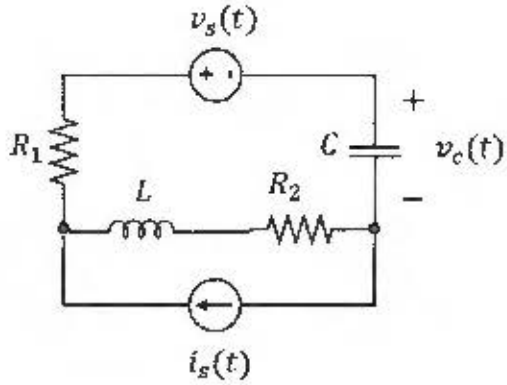

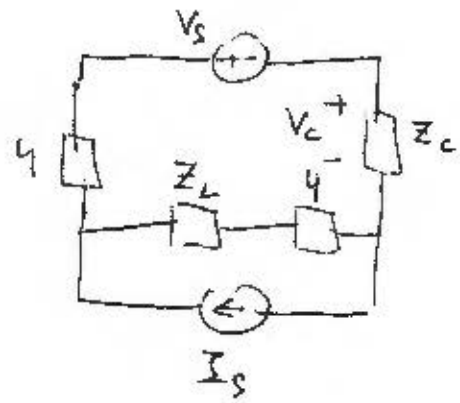

$$Z_c = \frac{1}{j\omega C} = \frac{10^6}{j\,2000\;125} = -4j$$

$$Z_L = j\omega L = j\,2000\;2\cdot10^{-3} = 4j$$

$$V_s = 32\sqrt{2}\,e^{-j45°} = 32\sqrt{2}\left(+\frac{\sqrt{2}}{2} - j\frac{\sqrt{2}}{2}\right) = 32 - 32j$$

$$I_s = 2e^{-j90°} = -2j$$

① ONLY V_s $\quad V_{c_1} = -V_s\cdot\frac{Z_c}{Z_c+Z_L+4+4} = \frac{(-32+32j)\cdot(-4j)}{\cancel{-4j}+\cancel{4j}+4+4} = \frac{-4j}{8}(-32+32j) = 16+16j$

② ONLY I_s : $V_{c_2} = I_s\cdot\frac{Z_L+4}{Z_L+4+Z_c+4}Z_c = (-2j)\frac{4+4j}{4-\cancel{4j}+\cancel{4j}+4}\cdot(-4j)$

$$= -\frac{8(4+4j)}{8} = -4-4j$$

③ SUPERPOSITION: $V_c = V_{c_1} + V_{c_2} = 12+12j = 12\sqrt{2}\,e^{j45°}$

$$v_c(t) = 12\sqrt{2}\cos(2000t + 45°)$$

$\boxed{A_2 = 12V}$ $\boxed{B_2 = 45°}$ $\boxed{W_2 = 2000\ 1/s}$

Phasors 008

Unlimited Attempts.

$v_s(t) = A_1 \cdot \cos(1000t)$

Find steady state voltage

$v_o(t) = A_2\sqrt{2} \cdot \cos(1000t + B_2)$ with $-180° < B_2 \leq 180°$

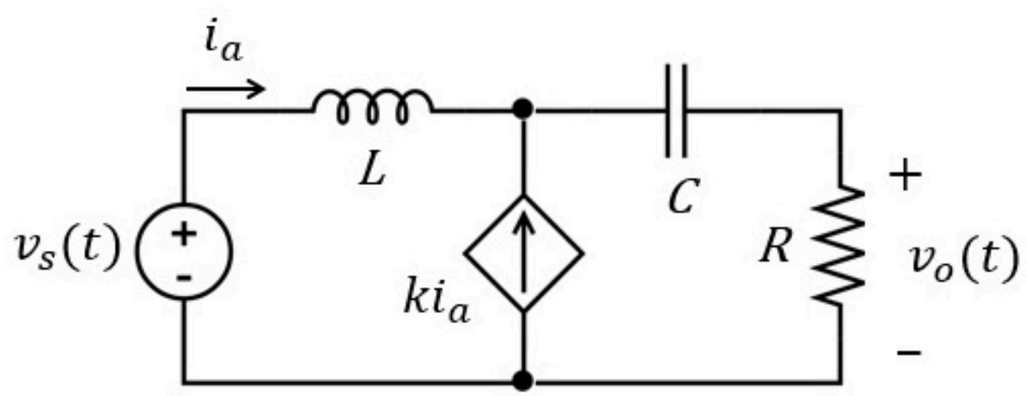

Given Variables:

A1 : 5 V
L : 20 mH
C : 20 uF
R : 45 ohm
k : 3 A/A

Calculate the following:

A2 (V) :

2.5 ✓

B2 (degrees) :

45 ✓

Hint: Use nodal analysis or KVL/KCL.

$v_s(t) = A_1 \cdot \cos(1000t)$

A1 : 2 V

L : 150 mH

C : 20 uF

R : 25 ohm

k : 1 A/A

Find steady state voltage

$v_o(t) = A_2\sqrt{2} \cdot \cos(1000t + B_2)$ with $-180° < B_2 \leq 180°$

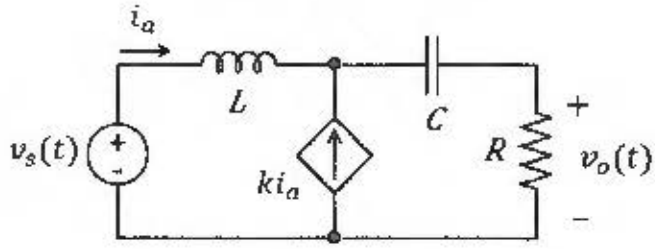

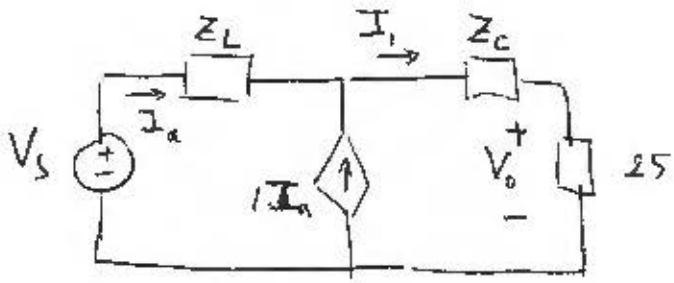

$I_1 = I_a + I_a = 2 I_a$

$Z_L = j\omega L = j150$

$Z_c = \frac{1}{j\omega C} = -j50$

$V_s = 2$

KVL: $V_s - I_a \cdot Z_L = I_1 (Z_c + 25) = 2 I_a (Z_c + 25)$

$$\Rightarrow I_a = \frac{V_s}{Z_L + 2Z_c + 50} = \frac{V_s}{150j - 100j + 50} = \frac{V_s}{50 + 50j}$$

$$V_o = I_1 \cdot 25 = 2 I_a \cdot 25 = \frac{50 \cdot V_s}{50 + 50j} = \frac{2}{1+j}$$

$$= \frac{2}{\sqrt{2}} e^{-j45°} = \sqrt{2}\, e^{-j45°}$$

$$v_o(t) = \sqrt{2} \cos(1000t - 45°)$$

$\boxed{A_2 = 1 \text{ V}}$

$\boxed{B_2 = -45°}$

Phasors 009

0 of 5 attempts made

$$i_s(t) = A_1 \cdot \cos\left(1000t + \frac{\pi}{2}\right) + A_2 \cdot \cos\left(2000t - \frac{\pi}{2}\right)$$

Assume the system is in steady state. Find the current i_a at times

$t_1 = 4\pi$ ms: $i_a(t_1) = B_1$

$t_2 = 5\pi$ ms: $i_a(t_2) = B_2$

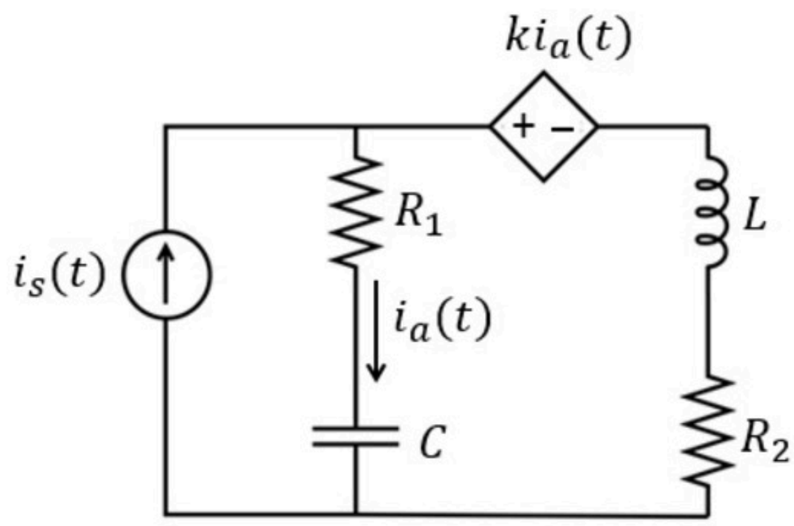

Given Variables:

A1 : 1 A

A2 : 1 A

L : 1 mH

C : 250 uF

R1 : 1 ohm

R2 : 2 ohm

k : 4 V/A

Calculate the following:

B1 (A) :

-2.5 ✓

B2 (A) :

-1.5 ✓

$i_s(t) = A_1 \cdot \cos(1000t + 90) + A_2 \cdot \cos(2000t - 90)$

Assume the system is in steady state. Find the current i_a at times

$t_1 = 4\pi$ ms: $i_a(t_1) = B_1$

$t_2 = 5\pi$ ms: $i_a(t_2) = B_2$

A1 : 6 A

A2 : 9 A

L : 1 mH

C : 250 uF

R1 : 8 ohm

R2 : 2 ohm

k : 1 V/A

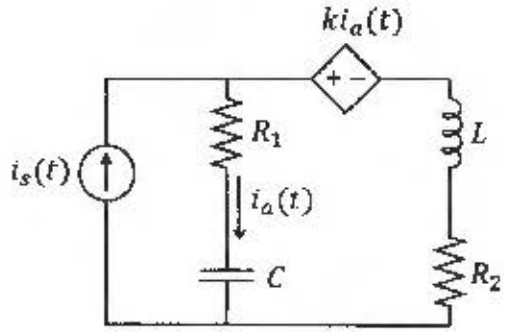

2 DIFFERENT ω !

WE NEED TO USE SUPERPOSITION

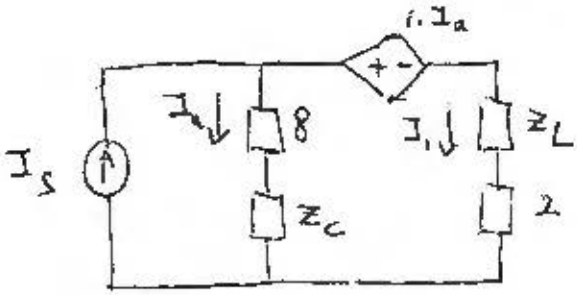

$\underline{\omega = 1000}$. $Z_L = j \cdot 1000\, L = j$

$Z_C = \frac{1}{j\omega C} = -4j$

$I_s = 6e^{j\frac{\pi}{2}} = 6j$

$\underline{\omega = 2000}$. $Z_L = j\,2000\,L = 2j$

$Z_C = \frac{1}{j\,2000\,C} = -2j$

$I_s = 9e^{-j\frac{\pi}{2}} = -9j$

$$I_1 = I_s - I_a \Rightarrow I_a(8 + Z_C) = 1 \cdot I_a + (I_s - I_a)(2 + Z_L)$$

$$\Rightarrow I_a = I_s \frac{2 + Z_L}{9 + Z_C + Z_L}$$

① $\underline{\omega = 1000}$: $I_a = 6j \frac{(2+j)}{(9-4j+j)} = \frac{6(-1+2j)}{3(3-j)}\frac{(3+j)}{(3+j)} = \frac{2}{10}(-5+5j) = -1+j$

$$i_{a_1}(t) = \sqrt{2}\cos(1000t + 135^\circ)$$

② $\underline{\omega = 2000}$: $I_a = (-9j)\frac{2+2j}{9+3j-2j} = 2(1-j) \Rightarrow i_{a_2}(t) = 2\sqrt{2}\cos(2000t - 45^\circ)$

③ $i_a(t) = i_{a_1}(t) + i_{a_2}(t) = \sqrt{2}\cos\left(1000t + \frac{3\pi}{4}\right) + 2\sqrt{2}\cos\left(2000t - \frac{\pi}{4}\right)$

④ $\underline{t = 4\pi \cdot 10^{-3}}$ $i_a = \sqrt{2}\cos\left(4\pi + \frac{3\pi}{4}\right) + 2\sqrt{2}\cos\left(8\pi - \frac{\pi}{4}\right) = \sqrt{2}\cos\left(\frac{3\pi}{4}\right) + 2\sqrt{2}\cos\left(-\frac{\pi}{4}\right)$

$= \sqrt{2}\left(-\frac{\sqrt{2}}{2}\right) + 2\sqrt{2}\left(\frac{\sqrt{2}}{2}\right) = -1 + 2 = 1$ $\boxed{B_1 = 1\text{ A}}$

$\underline{t = 5\pi \cdot 10^{-3}}$: $i_a = \sqrt{2}\cos\left(5\pi + \frac{3\pi}{4}\right) + 2\sqrt{2}\cos\left(10\pi - \frac{\pi}{4}\right) = \sqrt{2}\cos\left(-\frac{\pi}{4}\right) + 2\sqrt{2}\cos\left(-\frac{\pi}{4}\right)$

$= \sqrt{2}\left(\frac{\sqrt{2}}{2}\right) + 2\sqrt{2}\left(\frac{\sqrt{2}}{2}\right) = 1 + 2 = 3$ $\boxed{B_2 = 3\text{ A}}$

Phasors 010

Problem has been graded.

$v_s(t) = A_1 \cdot \cos(100t)$ and $i_s(t) = A_2$

Find $i_a(t) = A_3\sqrt{2} \cdot \cos(100t + B_3) + A_4$

with $-180° < B_3 \leq 180°$

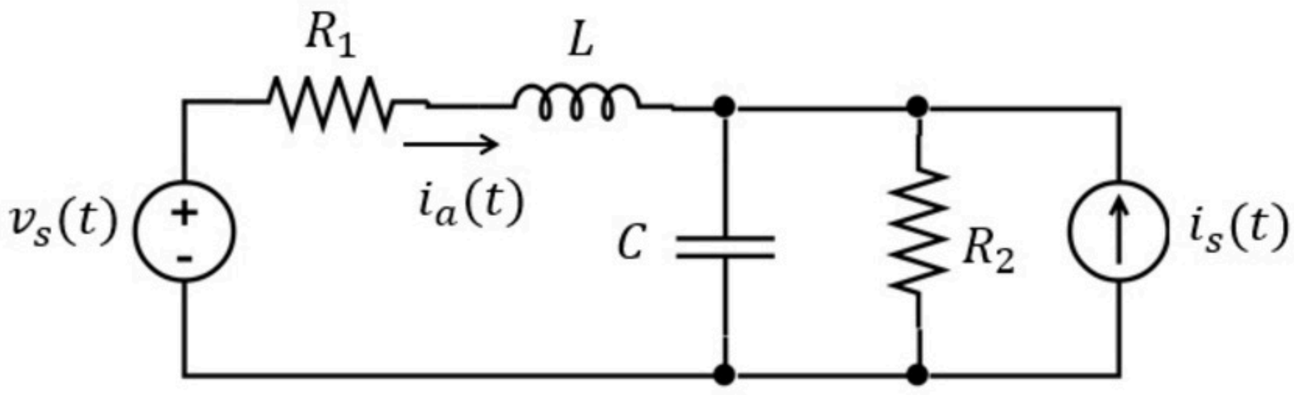

Given Variables:

A1 : 100 V
A2 : 6 A
C : 0.1 mF
L : 1.5 H
R1 : 50 ohm
R2 : 100 ohm

Calculate the following:

A3 (A) :

0.5 ✓

B3 (degrees) :

-45 ✓

A4 (A) :

-4 ✓

Hint: Use superposition

$v_s(t) = A_1 \cdot \cos(100t)$ and $i_s(t) = A_2$

Find $i_a(t) = A_3\sqrt{2} \cdot \cos(100t + B_3) + A_4$

with $-180° < B_3 \leq 180°$

A1 : 100 V

A2 : 6 A

C : 0.1 mF

L : 1.5 H

R1 : 50 ohm

R2 : 100 ohm

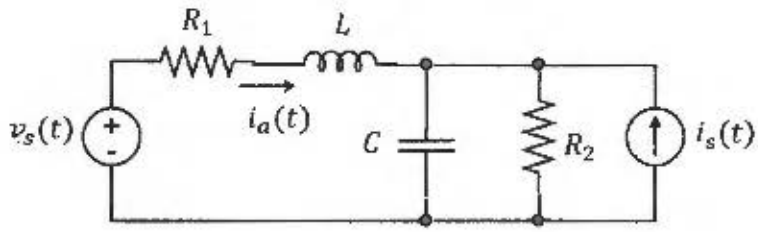

DIFFERENT ω ! WE NEED TO USE SUPERPOSITION

① $i_s(t)$ ONLY : $\omega = 0$ DC $\Rightarrow$ L SHORT / C OPEN

$$i_{a_1} = -\frac{100}{100+50} \cdot 6 = -4A$$

② $v_s(t)$ ONLY : $\omega = 100$

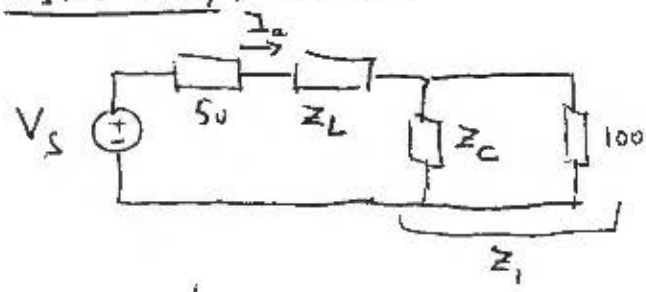

$$Z_L = j\,100\,L = 150j$$

$$Z_C = \frac{1}{j\,100C} = -100j$$

$$V_s = 100$$

$$Z_1 = \frac{1}{\frac{1}{100} + \frac{1}{-j100}} = \frac{100}{1+j} = 50(1-j)$$

$$I_a = \frac{V_s}{Z_1 + 50 + Z_L} = \frac{100}{50 - 50j + 50 + 150j} = \frac{100}{100 + 100j} = \frac{\sqrt{2}}{2} e^{-j45°}$$

$$i_{a_2} = \frac{\sqrt{2}}{2} \cos(100t - 45°)$$

③ $i_a(t) = i_{a_1} + i_{a_2} = \frac{\sqrt{2}}{2} \cos(100t - 45°) - 4$

$A_3 = 0.5$ A
$B_3 = -45°$
$A_4 = -4$ A

Phasors 011

Unlimited Attempts.

In the circuit below, $v_s(t) = A_1 \cdot \cos(25 \cdot 10^4 \cdot t)$.

The switch is closed for $t < 0$, and opens at time $t = 0$ s.

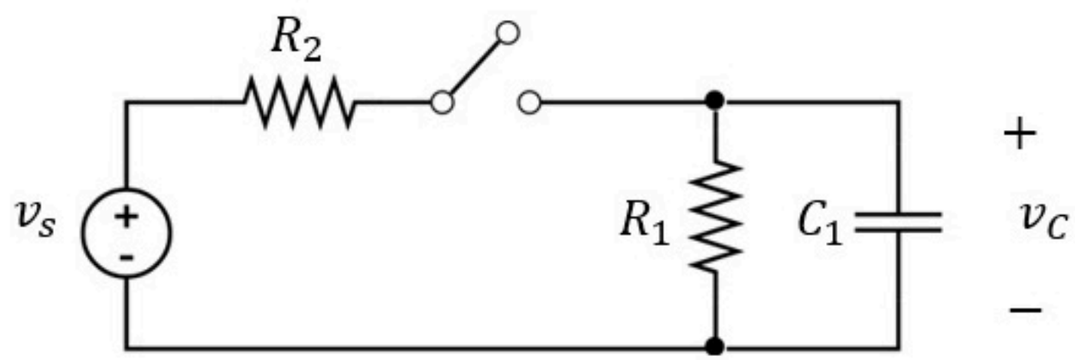

Find these voltages:

$v_1 = v_C(0^+)$ $\quad$ $v_2 = v_C(t_0)$

Note, for your calculations, use: $e^{-1/1.5} \approx 0.5$

Solve without a calculator

Given Variables:

R1 : 6 kohm
R2 : 12 kohm
C1 : 1 nF
A1 : 12 V
to : 8 us

Calculate the following:

v1 (V) :

2 ✓

v2 (V) :

0.5 ✓

Hint: Solve steady state with phasors; use it to find the initial condition for the RC transient analysis.

In the circuit below, $v_s(t) = A_1 \cdot \cos(25 \cdot 10^4 \cdot t)$.

The switch is closed for $t < 0$, and opens at time $t = 0$ s.

R1 : 6 kohm

R2 : 12 kohm

C1 : 1 nF

A1 : 12 V

to : 8 us

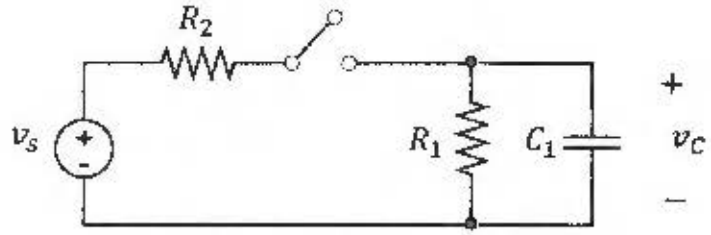

Find these voltages:

$$v_1 = v_C(0^+) \qquad v_2 = v_C(t_0)$$

Note, for your calculations, use: $e^{-1/1.5} \approx 0.5$

Solve without a calculator

① $t < 0$ ASSUME STEADY STATE @ $t = 0^-$

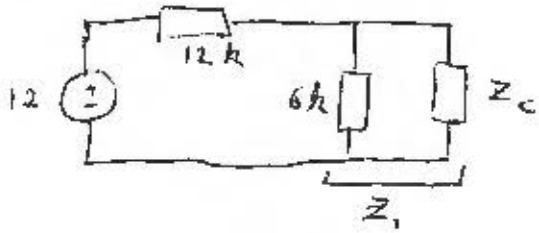

$$Z_c = \frac{1}{j\,25 \cdot 10^9 \cdot 10^{-9}} = -(4k) \cdot j$$

$$Z_1 = \frac{1}{\frac{1}{6k} + \frac{j}{4k}} = \frac{24k}{4+6j} = \frac{12k}{2+3j}$$

$$V_c = V_s \frac{Z_1}{Z_1 + R_2} = 12 \cdot \frac{12}{12 + 12(2+3j)} = \frac{12}{3+3j} = \frac{4}{1+j} = \frac{4}{\sqrt{2}} \cdot e^{-j45^\circ}$$

$$v_c(t) = \frac{4}{\sqrt{2}} \cos\left(25 \cdot 10^4 - \frac{\pi}{4}\right) \Rightarrow v_c(0^-) = \frac{4}{\sqrt{2}} \cos\left(-\frac{\pi}{4}\right) = \frac{4}{\sqrt{2}} \cdot \frac{\sqrt{2}}{2} = 2V$$

② $t = 0^+$ $\quad v_c(0^+) = v_c(0^-) = 2V \Rightarrow \boxed{v_1 = 2V}$

③ $t > 0$: TRANSIENT RESPONSE OF RC CIRCUIT

$v_c(0^+) = 2V$ $\qquad R_{TH} = R_1 \Rightarrow \tau = R_1 C$

$= (6k) \cdot (1n) = 6\ \mu s$

$v_c(\infty) = 0V$

$$v_c(t) = 2e^{-t/6\mu s} \quad \text{FOR } t > 0$$

$$v_c(t_0) = v_c(8\mu s) = 2e^{-8/6} = 2\left(e^{-\frac{1}{1.5}}\right)^2 = \frac{2}{4} = \frac{1}{2}V \qquad \boxed{v_2 = 0.5V}$$

Phasors 016

2 of 5 attempts made

The AC circuit below is in steady-state, and you are not told the ω of the source. The phasor diagram shows the phasors of $\boldsymbol{i_S}$ and $\boldsymbol{i_a}$.

The rectangular boxes represent two circuit elements. One of them is an inductor L_1 (but you don't know if it corresponds to i_a or i_b). The other can be a resistor R_2, a capacitor C_2 or an inductor L_2.

You are also told that the maximum value of $i_a(t)$ is A_1 and the maximum value of $i_S(t)$ is A_2.

a. What is the maximum value of the $i_b(t)$ waveform, i_{bmax}?

b. With $i_d(t)$ expressed as $A \cdot \cos(\omega t + B_1)$, what is B_1? Constraints: $A > 0$ and $-180° < B_1 \leq 180°$.

c. What is the value of ω?

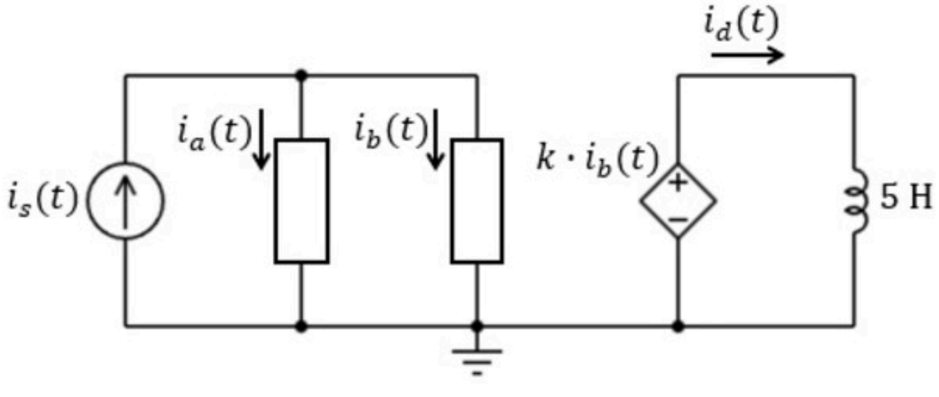

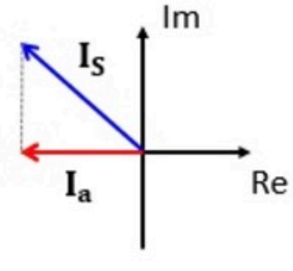

Given Variables:

A1 : 4 A
A2 : 5 A
L1 : 2 mH
R2 : 3 ohm
C2 : 10 mF
L2 : 3 mH
k : -5 V/A

Calculate the following:

ibmax (A) :

3 ✓

B1 (degrees) :

180 ✓

omega (rad/s) :

2000 ✓

The AC circuit below is in steady-state, and you are not told the ω of the source. The phasor diagram shows the phasors of $\boldsymbol{i_S}$ and $\boldsymbol{i_a}$.

The rectangular boxes represent two circuit elements. One of them is an inductor L_1 (but you don't know if it corresponds to i_a or i_b). The other can be a resistor R_2, a capacitor C_2 or an inductor L_2.

You are also told that the maximum value of $i_a(t)$ is A_1 and the maximum value of $i_S(t)$ is A_2.

a. What is the maximum value of the $i_b(t)$ waveform, i_{bmax}?

b. With $i_d(t)$ expressed as $A \cdot \cos(\omega t + B_1)$, what is B_1? Constraints: $A > 0$ and $-180° < B_1 \leq 180°$.

c. What is the value of ω?

$A_1 = 4\,A$

$A_2 = 5\,A$

$L_1 = 2\,mH$

$R_2 = 3\,\Omega$

$C_2 = 10\,mF$

$L_2 = 3\,mH$

$k = -5\,V/A$

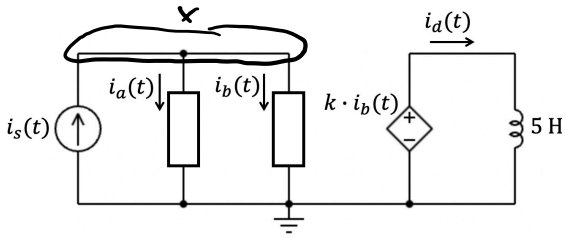

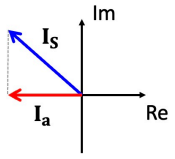

a. The max value of a sinusoidal waveform is its amplitude $\Rightarrow i_{bmax} = |I_b|$

KCL@X : $i_S = i_a + i_b \Rightarrow$

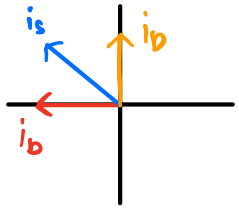

$\Rightarrow |I_S|^2 = |I_a|^2 + |I_b|^2$

$|I_b| = \sqrt{|I_S|^2 - |I_a|^2} = \sqrt{5^2 - 4^2} = \sqrt{25-16} = \sqrt{9} = 3 \Rightarrow \boxed{i_{b,max} = 3A}$

b. we can see that $I_d = \dfrac{k \cdot I_b}{j\omega S}$

from part a, $|I_b| = 3 \Rightarrow I_b = 3e^{j\frac{\pi}{2}}$

$I_d = \dfrac{-\cancel{5} \cdot 3e^{j\frac{\pi}{2}}}{j\omega \cancel{5}} = \dfrac{-3\cancel{e^{j\pi/2}}}{\cancel{e^{j\pi/2}}\,\omega} = -\dfrac{3}{\omega} = \dfrac{3}{\omega}e^{j\pi} \Rightarrow i_d(t) = \dfrac{3}{\omega}\cos(\omega t + \pi) \Rightarrow \boxed{B_1 = 180°}$

c. Assume Z_a is a resistor and Z_b is the known inductor (I_a goes through Z_a, I_b goes through Z_b)

Define V_a as voltage across Z_a, and V_b across Z_b $\Rightarrow V_a = V_b$ since they are in parallel

Plot the phasors roughly and see if assumption holds

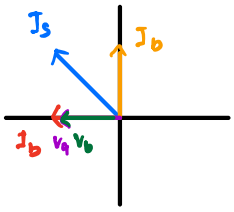

we can see that the resistor current is in phase with the voltage and inductor voltage is ahead of the current

$\Rightarrow$ our assumption is correct ✓

$Z_a = R_2$, $Z_b = j\omega L_1$

$V_a = R_2 I_a$, $V_b = j\omega L_1 I_b$

$V_a = V_b \Rightarrow 3 \cdot 4e^{j\pi} = j\omega \cdot (2\times10^{-3}) \cdot 3e^{j\pi/2}$

$\omega = \dfrac{3 \cdot 4}{(2\times10^{-3}) \cdot 3}$

$\boxed{\omega = 2000 \text{ rad/s}}$

Phasors 017

Problem has been graded.

The circuit below represents an AC circuit in steady-state in the phasor domain (for the complex numbers, you may assume units are V, A, Ω, etc. as appropriate). Both sources in the circuit have the same ω, but you are not told the value of ω. Each box represents the impedance of a single circuit element (a resistor, capacitor or inductor).

a. What are the maximum values of waveforms $v_S(t)$ and $i_S(t)$? Enter your answers as Y_1 and Y_2, with $Y_1 = \frac{v_{Smax}}{\sqrt{2}}$ and $Y_2 = i_{Smax}$.

b. We now double ω of both sources but keep everything else the same (such as the capacitor, inductor and resistor values; the amplitude and phase of the sources, etc.). Find the new value of all complex numbers in the circuit (the new value of a_1 is called a_2, etc.) as well as the new magnitude of the current source $|\mathbf{I_S}| = X_2$.

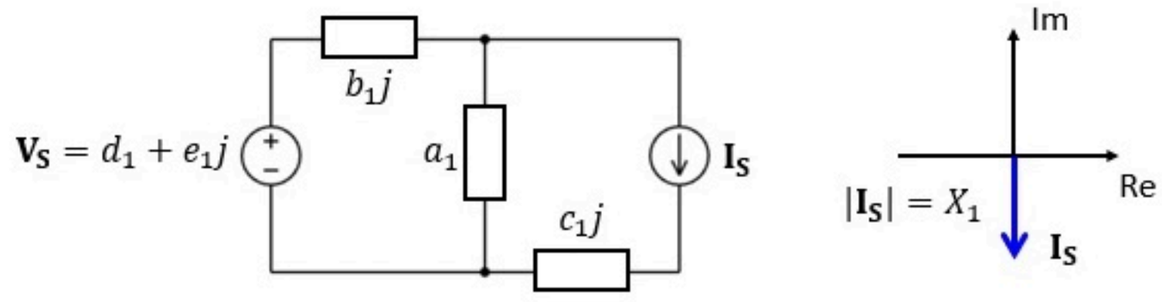

Given Variables:

a1 : 30
b1 : -10
c1 : 5
d1 : 6
e1 : 6
X1 : 5 A

Calculate the following:

Y1 (V) :

5.999999999999999 ✓

Y2 (A) :

5 ✓

a2 :

30 ✓

b2 :

-5 ✓

c2 :

10 ✓

d2 :

6 ✓

e2 :

6 ✓

X2 (A) :

5 ✓

Hint: Which complex numbers are phasors, which are impedances. Omega is implicit for phasors.

The circuit below represents an AC circuit in steady-state in the phasor domain (for the complex numbers, you may assume units are V, A, Ω, etc. as appropriate). Both sources in the circuit have the same ω, but you are not told the value of ω. Each box represents the impedance of a single circuit element (a resistor, capacitor or inductor).

a. What are the maximum value of $v_S(t)$ and $i_S(t)$, called v_{Smax} and i_{Smax} respectively? For v_{Smax}, find Y_1 such that $v_{Smax} = Y_1\sqrt{2}$.

b. We now double ω of both sources but keep everything else the same (such as the capacitor, inductor and resistor values; the amplitude and phase of the sources, etc.). Find the new value of all complex numbers in the circuit (the new value of a_1 is called a_2, etc.) as well as the new magnitude of the current source $|\mathbf{I_S}| = X_2$.

$a_1 = 50$

$b_1 = -20$

$c_1 = 10$

$d_1 = 1$

$e_1 = 1$

$X_1 = 5A$

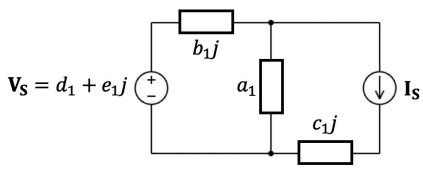

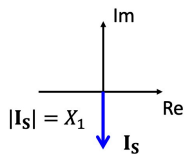

a. The max value of a sinusoidal waveform is its amplitude

$V_{S,max} = |V_S| = \sqrt{d_1^2 + e_1^2} = \sqrt{1^2+1} = \sqrt{2} \Rightarrow Y_1 = 1$

$i_{s,max} = |I_S| = X_1 \Rightarrow \boxed{i_{s,max} = 5A}$

b. Analyze which elements have a dependence on ω

a_1 is the impedance of a resistor $\Rightarrow Z_R = 50$, this has no dependence on ω so if $\omega \to 2\omega$, $50 \to 50 \Rightarrow \boxed{a_2 = 50}$

$b_1 j \Rightarrow -20j$ is the impedance of a capacitor

$Z_C = \frac{1}{j\omega C} \Rightarrow$ if $\omega \to 2\omega$, then $\frac{1}{j2\omega C} = \frac{1}{2(j\omega C)} = \frac{1}{2} \cdot \frac{1}{j\omega C} = \frac{1}{2} Z_C$

if $\omega \to 2\omega$, then $-20j \to \frac{1}{2}(-20j) = -10j \Rightarrow \boxed{b_2 = -10}$

$c_1 j \Rightarrow 10j$ is the impedance of an inductor

$Z_L = j\omega L \Rightarrow$ if $\omega \to 2\omega$, then $j2\omega L = 2(j\omega L) = 2Z_L$

if $\omega \to 2\omega$, then $10j \to 2(10j) = 20j \Rightarrow \boxed{c_2 = 20}$

$V_S = d_1 + e_1 j = 1 + j$ is the phasor for a source $v_S(t) = \frac{\sqrt{2}}{2}\cos(\omega t + \frac{\pi}{4})$

if $\omega \to 2\omega$, then $v_S(t) = \frac{\sqrt{2}}{2}\cos(2\omega t + \frac{\pi}{4}) \Rightarrow V_S = \frac{\sqrt{2}}{2} e^{j\pi/4} = 1 + j \Rightarrow \boxed{\begin{matrix} d_2 = 1 \\ e_2 = 1 \end{matrix}}$

$\Rightarrow$ the phasor for a voltage waveform does not depend on ω

Similarly, $i_S(t) = 5\cos(\omega t - \frac{\pi}{2})$ if $\omega \to 2\omega$, $i_S(t) = 5\cos(2\omega t - \frac{\pi}{2}) \Rightarrow \boxed{X_2 = 5A}$

Phasors 018

0 of 5 attempts made

In the circuit below, the switch moves from position 1 to position 2 at time $t = 0$. For $t < 0$ (switch in position 1), you may assume that the system is in steady state. The voltage source is sinusoidal with $\omega = W_1$.

The diagram shows two phasors, **A** and **B**. (Note that the phasors are not drawn to scale. Also, we show three diagrams to illustrate the situation depending on the value of a you were given. You need to select the diagram that corresponds to your given value.) In your diagram, one phasor represents the capacitor voltage v_C and the other the resistor voltage v_R (but you are not told which one is which).

a. Find $i_1 = i_R(0^-)$ (i.e., just before the switch moves to position 2).

b. Find $i_2 = i_R(0^+)$ (i.e., just after the switch moves to position 2).

$|\mathbf{A}| = X\sqrt{2}$

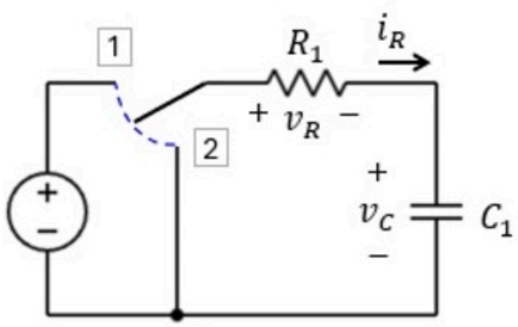

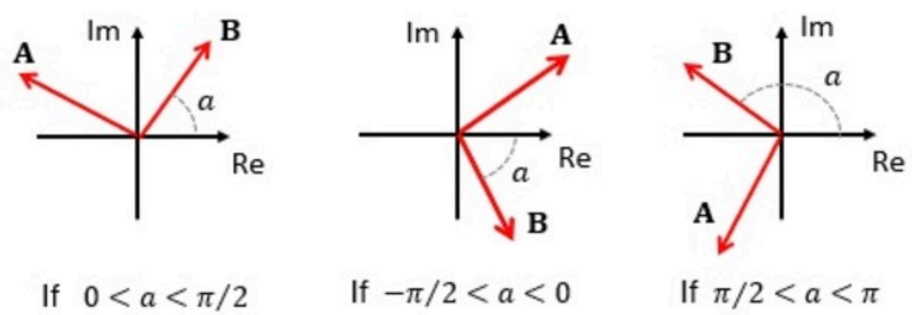

Given Variables:

W1 : 1 rad/s

X : 25

a : -45 degrees

R1 : 5 ohm

C1 : 1 F

Calculate the following:

i1 (A) :

5 ✓

i2 (A) :

-1 ✓

In the circuit below, the switch moves from position 1 to position 2 at time $t = 0$. For $t < 0$ (switch in position 1), you may assume that the system is in steady state. The voltage source is sinusoidal with $\omega = W_1$.

The diagram shows two phasors, **A** and **B**. (Note that the phasors are not drawn to scale. Also, we show three diagrams to illustrate the situation depending on the value of a you were given. You need to select the diagram that corresponds to your given value.) In your diagram, one phasor represents the capacitor voltage v_C and the other the resistor voltage v_R (but you are not told which one is which).

a. Find $i_1 = i_R(0^-)$ (i.e., just before the switch moves to position 2).

b. Find $i_2 = i_R(0^+)$ (i.e., just after the switch moves to position 2).

$W_1 = 1$ rad/s

$X = 10$

$a = 45°$

$R_1 = 2\Omega$

$C_1 = 1F$

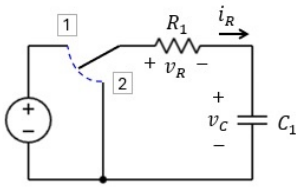

$|\mathbf{A}| = X\sqrt{2}$

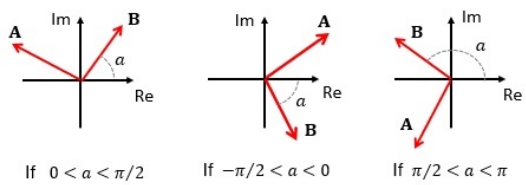

a. Assume $A = V_R$ and $B = V_C$

We plot I_R such that it is in phase with V_R

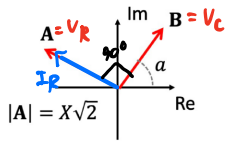

$I_R = I_C$ since the resistor is series with the capacitor

$\Rightarrow$ the capacitor current is ahead of the capacitor voltage $\Rightarrow$ our assumption is correct ✓

At $t = 0^-$

$$V_R = X\sqrt{2}\, e^{j(a+90)} = 10\sqrt{2}\, e^{j135}$$

$$i_R = \frac{V_R}{R_1} = \frac{10\sqrt{2}\, e^{j135}}{2} = 5\sqrt{2}\, e^{j135}$$

$$i_R(t) = 5\sqrt{2}\cos(t + 135)$$

$$i_R(0^-) = 5\sqrt{2}\cos(0 + 135) = 5\sqrt{2}\cdot\left(-\frac{\sqrt{2}}{2}\right) \Rightarrow \boxed{i_1 = -5A}$$

b. At $t = 0^+$, the capacitor voltage cannot change instantaneously

$$Z_C = \frac{1}{j\omega_1 C_1} = \frac{1}{j(1)(1)} = -j$$

$$V_C = i_R \cdot Z_C = 5\sqrt{2}\, e^{j135} \cdot -j = 5\sqrt{2}\, e^{j45}$$

$$V_C(t) = 5\sqrt{2}\cos(t + 45)$$

$$V_C(0^-) = 5\sqrt{2}\cos(0 + 45) = 5\sqrt{2}\cdot\left(\frac{\sqrt{2}}{2}\right) = 5V \Rightarrow V_C(0^+) = 5V$$

at $t = 0^+$

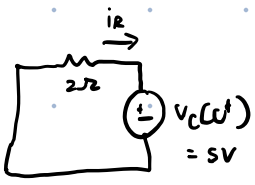

$$i_R(0^+) = \frac{-5}{2}\ A$$

$$\boxed{i_2 = -2.5\ A}$$

Phasors 019

0 of 5 attempts made

The AC circuit below has $\omega = W_1$ and is in steady state. The phasor diagram shows the phasors of v_S and i_S. You are given the angle a, and vector lengths $|\mathbf{I_S}| = A_1$ and $|\mathbf{V_S}| = A_2\sqrt{b}$. The diagram is not necessarily drawn to scale (but $\mathbf{V_S}$ is along the imaginary axis). The element in the center (rectangular box) is either an inductor or a capacitor but you are not told which.

a. At what time does v_R reach its maximum value? Enter $k = t_0 \cdot \frac{12}{\pi}$, where t_0 is the first time that the maximum is reached, for $t_0 \geq 0$. (Hint: convert a to radians first)

b. We select the mystery element such that $|\mathbf{I_a}|$ is minimized (note that this is the current through the voltage source). What is the mystery element type (enter 1 for capacitor, 2 for inductor)? What is its value X (i.e., either the capacitance or the inductance value, in F or H respectively)?

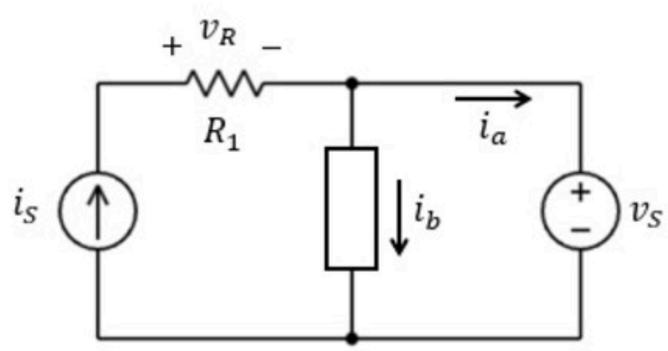

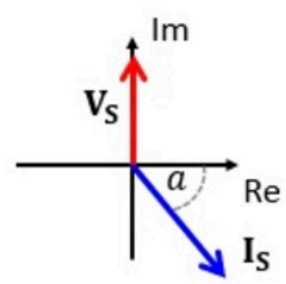

$-\pi/2 < a < 0$

Given Variables:

W1 : 4 rad/s

a : -30 degrees

A1 : 1 A

A2 : 10 V

b : 3

R1 : 1 ohm

Calculate the following:

k (s) :

0.5 ✓

Type :

2 ✓

X :

5 ✓

The AC circuit below has $\omega = W_1$ and is in steady state. The phasor diagram shows the phasors of v_S and i_S. You are given the angle a, and vector lengths $|\mathbf{I_S}| = A_1$ and $|\mathbf{V_S}| = A_2\sqrt{b}$. The diagram is not necessarily drawn to scale (but $\mathbf{V_S}$ is along the imaginary axis). The element in the center (rectangular box) is either an inductor or a capacitor but you are not told which.

a. At what time does v_R reach its maximum value? Enter $k = t_0 \cdot \frac{12}{\pi}$, where t_0 is the first time that the maximum is reached, for $t_0 \geq 0$. (Hint: convert a to radians first)

b. We select the mystery element such that $|\mathbf{I_a}|$ is minimized (note that this is the current through the voltage source). What is the mystery element type (enter 1 for capacitor, 2 for inductor)? What is its value X (i.e., either the capacitance or the inductance value, in F or H respectively)?

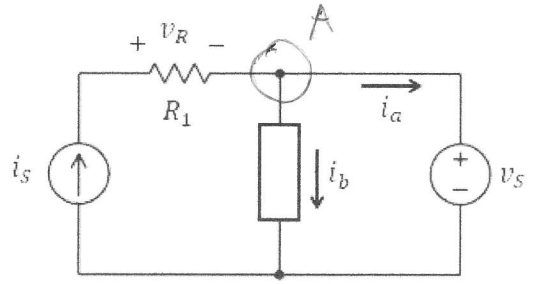

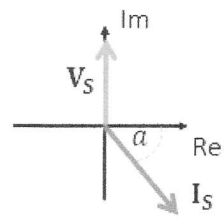

$-\pi/2 < a < 0$

$W_1 = 2$ rad/s
$a = -30°$
$A_1 = 2A$
$A_2 = 10V$
$b = 3$
$R_1 = 1\Omega$

(a) $V_R = R_1 I_S = R_1 \cdot A_1 e^{ja} = 2e^{-j30°}$

$v_{R_{max}} = |V_R|$ $\quad v_R(t) = 2\cos(2t - 30°)$ $\quad$ MAX WHEN $\cos(\phi) = 1$

$\phi = 0 \Rightarrow 2t_0 - \frac{\pi}{6} = 0 \Rightarrow t_0 = \frac{\pi}{12} \Rightarrow k = t_0 \cdot \frac{12}{\pi} = 1$ $\quad \boxed{k = 1}$

(b) KCL @ A: $I_S = I_B + I_A$

If the mystery element is a capacitor or inductor: I_b is perpendicular to V_S

Let's look at different options

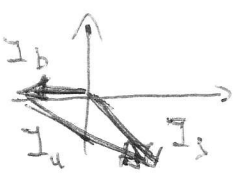

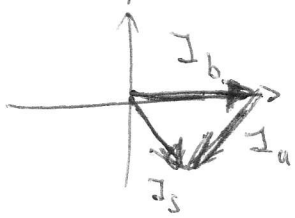

etc. ⇝

smallest I_a

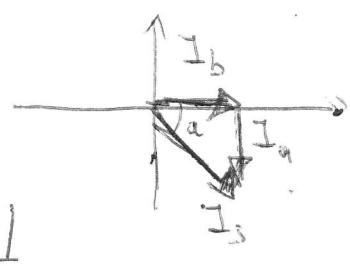

$\cos(-a) = \frac{|I_b|}{|I_s|} \Rightarrow \cos\left(\frac{\pi}{6}\right) = \frac{\sqrt{3}}{2} = \frac{|I_b|}{2}$

$|I_b| = \sqrt{3}$ on the real axis $\Rightarrow I_b = \sqrt{3}$

also: $V_S = Z \cdot I_b \Rightarrow Z = \frac{V_S}{I_b} = \frac{10\sqrt{3}}{\sqrt{3}} j = 10j$

This must be an inductor: $Z = j\omega L = 10j$

$\Rightarrow \omega L = 10 \Rightarrow L = \frac{10}{2} = 5H$

$\boxed{X = 5}$

PP Phasors 021

Unlimited Attempts.

Find the Thevenin equivalent model between a and b, in phasor notation:

$\mathbf{V_{Th}} = a + jb$

$\mathbf{Z_{Th}} = c + j\mathrm{d}$

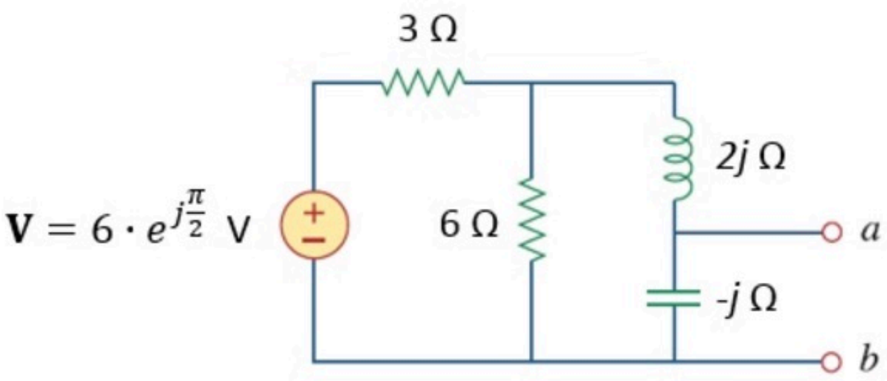

Given Variables:

Calculate the following:

a (V) :

1.6 ✓

b (V) :

-0.8 ✓

c (ohm) :

0.4 ✓

d (ohm) :

-1.2 ✓

Hint: You can use voltage divider and series/parallel connections of impedances

(a)

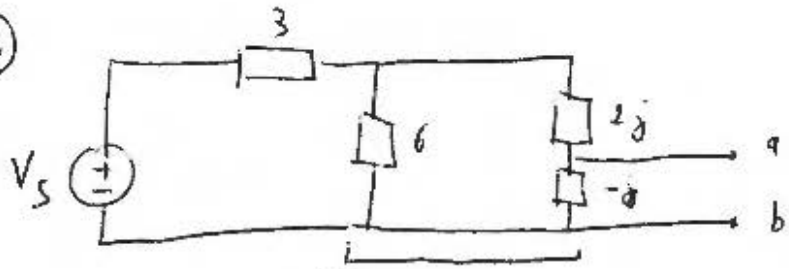

$$Z_1 = 6 // (2j - j) = 6 // j = \frac{1}{\frac{1}{6} + \frac{1}{j}} = \frac{6j}{6+j}$$

$$V_{ab} = V_S \frac{Z_1}{Z_1 + 3} \cdot \frac{-j}{2j - j} = V_S \cdot \frac{6j}{6j + 3(6+j)} \frac{-j}{j} = -V_S \frac{6j}{18 + 9j}$$

$$= \frac{-6e^{j\frac{\pi}{2}} \cdot 6j}{9(2+j)} \frac{(2-j)}{(2-j)} = \frac{-6j \cdot 6j}{9} \frac{(2-j)}{(4+1)} = \frac{36}{9} \cdot \frac{2-j}{5} = \frac{4}{5}(2-j)$$

$$V_{TH} = V_{ab} = \frac{8}{5} - \frac{4}{5} j$$

$\boxed{a = 1.6\,V}$ $\boxed{b = -0.8\,V}$

(b)

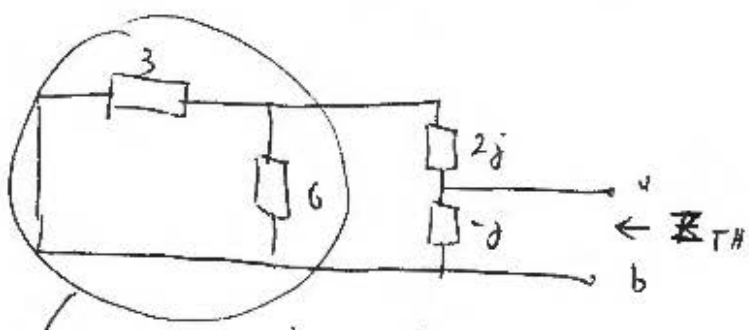

$$3 // 6 = \frac{1}{\frac{1}{3} + \frac{1}{6}} = \frac{6}{3} = 2\,\Omega$$

$$Z_{TH} = (2+2j) // (-j) = \frac{1}{\frac{1}{2+2j} + \frac{1}{-j}} = \frac{-j(2+2j)}{-j + 2 + 2j} = \frac{2-2j}{2+j}$$

$$= \frac{(2-2j)(2-j)}{(2+j)(2-j)} = \frac{(4-2j-4j-2)}{5} = \frac{2}{5} - \frac{6}{5} j$$

$$Z_{TH} = \frac{2}{5} - \frac{6}{5} j$$

$\boxed{c = 0.4\,\Omega}$ $\boxed{d = -1.2\,\Omega}$

PP Phasors 001

Unlimited Attempts.

$$v_1(t) = -4 \cdot \cos\left(10t + \frac{\pi}{4}\right) \text{ V}$$
$$v_2(t) = 3 \cdot \sin\left(10t + \frac{\pi}{3}\right) \text{ V}$$

Express as phasors

$\mathbf{V_1} = A_1 \cdot e^{jB_1}$ with $0 \leq A_1$ and $-180° \leq B_1 \leq 180°$

$\mathbf{V_2} = A_2 \cdot e^{jB_2}$ with $0 \leq A_2$ and $-180° \leq B_2 \leq 180°$

Given Variables:

. : . .

Calculate the following:

A1 (V) :

4 ✓

B1 (degrees) :

-135 ✓

A2 (V) :

3 ✓

B2 (degrees) :

-30 ✓

> Hint: Convert sin() to cos() first

PP Phasors 002

Unlimited Attempts.

$$\mathbf{V_1} = 5 \cdot e^{j\frac{\pi}{6}}$$
$$\mathbf{V_2} = 5 \cdot e^{j\frac{5\pi}{6}}$$
$$\mathbf{V_3} = 6 \cdot e^{-j\frac{\pi}{2}}$$

Find

$$\mathbf{X} = a + jb = \mathbf{V_1} + \mathbf{V_2} + \mathbf{V_3}$$

Given Variables:

. : . .

Calculate the following:

a (.) :

0 ✓

b (.) :

-1 ✓

Hint: Draw the vectors.

PP Phasors 003

Unlimited Attempts.

$$\mathbf{V_1} = 7 \cdot e^{j\frac{\pi}{4}}$$

$$\mathbf{V_2} = 7 \cdot e^{j\frac{11\pi}{12}}$$

$$\mathbf{V_3} = 7 \cdot e^{j\frac{7\pi}{12}}$$

Find

$$\mathbf{X} = a + jb = \mathbf{V_1} + \mathbf{V_2} - \mathbf{V_3}$$

Given Variables:

. : . .

Calculate the following:

a (.) :

0 ✓

b (.) :

0 ✓

PP Phasors 004

Unlimited Attempts.

$$v(t) = 2\sqrt{2} \cdot \cos\left(10t + \frac{\pi}{6}\right) + 2\sqrt{2} \cdot \sin\left(10t + \frac{7\pi}{6}\right) \quad \text{V}$$

Express

$v(t) = A \cdot \cos(10t + B)$ with $0 \leq A$ and $-180° \leq B \leq 180°$

Given Variables:

. : . .

Calculate the following:

A (V) :

4 ✓

B (degrees) :

75 ✓

Hint: Convert to phasors; do the algebra in the complex domain (mostly in polar coordinates).

PP Phasors 005

Unlimited Attempts.

Express the current as a time waveform

$i(t) = A_1 \cdot \cos(2\pi f_1 \cdot t + B_1)$ with $0 \leq A_1$ and $-180° \leq B_1 \leq 180°$

and as a phasor

$\mathbf{I} = A_2 \cdot e^{jB_2}$ with $0 \leq A_2$ and $-180° \leq B_2 \leq 180°$

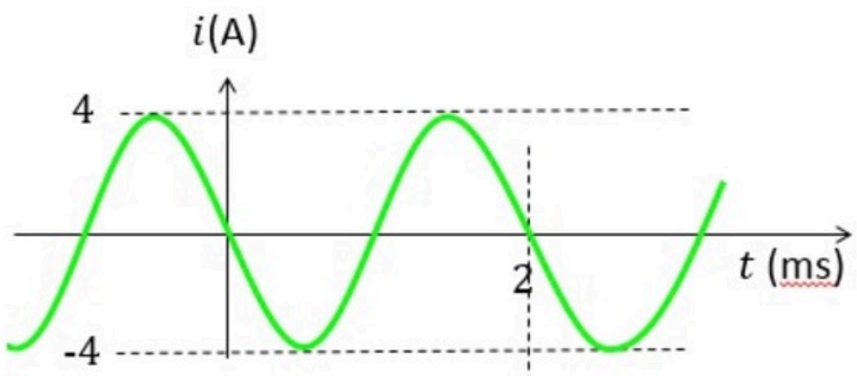

Given Variables:

. : . .

Calculate the following:

A1 (A) :

4 ✓

f1 (1/s) :

500 ✓

B1 (degrees) :

90 ✓

A2 (A) :

4 ✓

B2 (degrees) :

90 ✓

Hint: Convert sin() to cos().

PP Phasors 006

Unlimited Attempts.

Express the current as a time waveform

$i(t) = A_1 \cdot \cos(2\pi f_1 \cdot t + B_1)$ with $0 \leq A_1$ and $-180° \leq B_1 \leq 180°$

and as a phasor

$\mathbf{I} = A_2 \cdot e^{jB_2}$ with $0 \leq A_2$ and $-180° \leq B_2 \leq 180°$

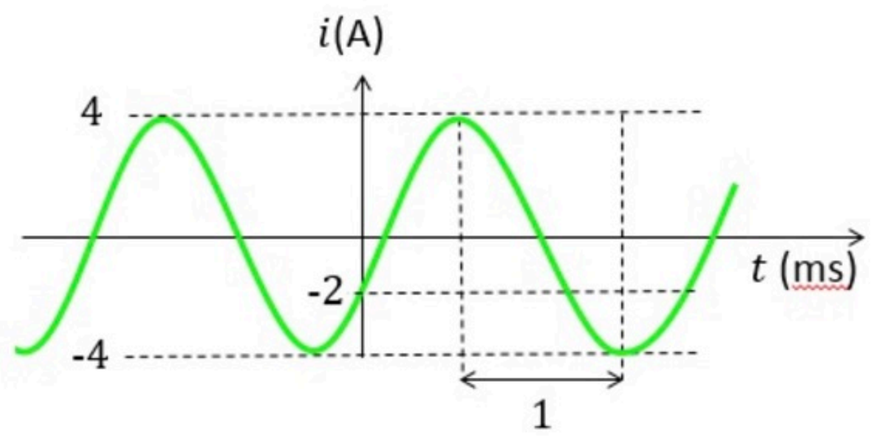

Given Variables:

. : . .

Calculate the following:

A1 (A) :

4 ✓

f1 (1/s) :

500 ✓

B1 (degrees) :

-120 ✓

A2 (A) :

4 ✓

B2 (degrees) :

-120 ✓

Hint: Can we find the phase on the graph?

PP Phasors 007

Unlimited Attempts.

Express the current as a time waveform

$i(t) = A_1 \cdot \cos(2\pi f_1 \cdot t + B_1)$ with $0 \leq A_1$ and $-180° \leq B_1 \leq 180°$

and as a phasor

$\mathbf{I} = A_2 \cdot e^{jB_2}$ with $0 \leq A_2$ and $-180° \leq B_2 \leq 180°$

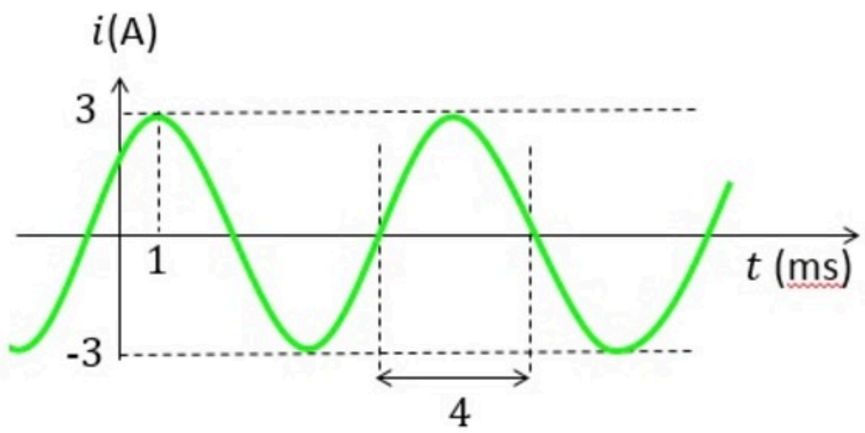

Given Variables:

. : . .

Calculate the following:

A1 (A) :

3 ✓

f1 (1/s) :

125 ✓

B1 (degrees) :

-45 ✓

A2 (A) :

3 ✓

B2 (degrees) :

-45 ✓

Hint: How does phase relates to time delay?

PP Phasors 008

Unlimited Attempts.

Express the current as a time waveform

$i(t) = A_1 \cdot \cos(2\pi f_1 \cdot t + B_1)$ with $0 \leq A_1$ and $-180° \leq B_1 \leq 180°$

and as a phasor

$\mathbf{I} = A_2 \cdot e^{jB_2}$ with $0 \leq A_2$ and $-180° \leq B_2 \leq 180°$

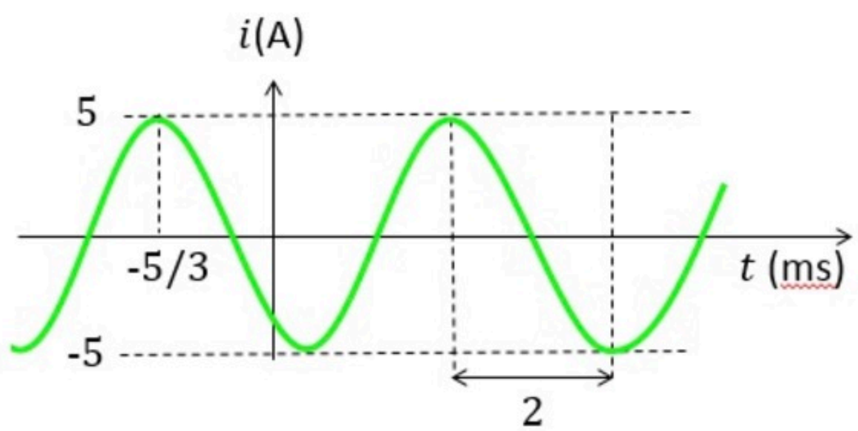

Given Variables:

. : . .

Calculate the following:

A1 (A) :

5 ✓

f1 (1/s) :

250 ✓

B1 (degrees) :

150 ✓

A2 (A) :

5 ✓

B2 (degrees) :

150 ✓

Hint: How does phase relates to time delay?

PP Phasors 009

Unlimited Attempts.

Express the current as a time waveform

$i(t) = A_1 \cdot \cos(2\pi f_1 \cdot t + B_1)$ with $0 \leq A_1$ and $-180° \leq B_1 \leq 180°$

and as a phasor

$\mathbf{I} = A_2 \cdot e^{jB_2}$ with $0 \leq A_2$ and $-180° \leq B_2 \leq 180°$

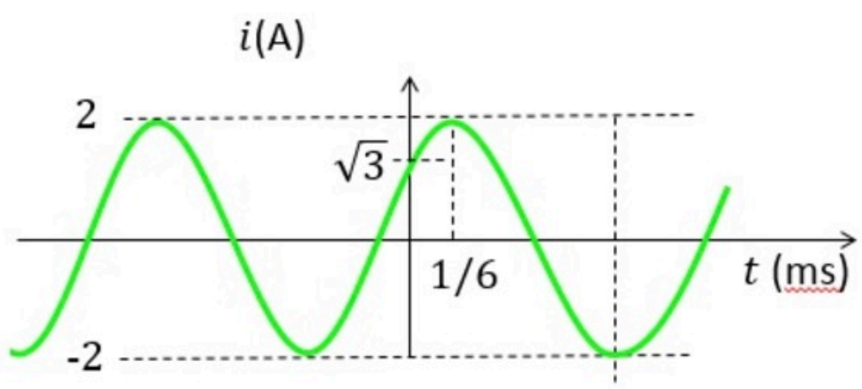

Given Variables:

. : . .

Calculate the following:

A1 (A) :

2 ✓

f1 (1/s) :

500 ✓

B1 (degrees) :

-30 ✓

A2 (A) :

2 ✓

B2 (degrees) :

-30 ✓

Hint: How does phase relates to time delay?

PP Phasors 010

Unlimited Attempts.

Find t_1.

Express the current as a phasor

$\mathbf{I} = A_2 \cdot e^{jB_2}$ with $0 \leq A_2$ and $-180° \leq B_2 \leq 180°$

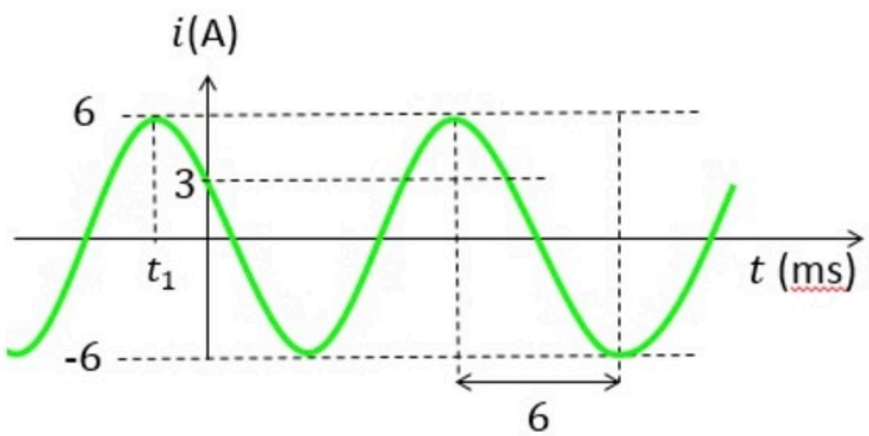

Given Variables:

. : . .

Calculate the following:

t1 (ms) :

-2 ✓

A2 (A) :

6 ✓

B2 (degrees) :

60 ✓

Hint: Can we find the phase on the graph?

PP Phasors 011

Unlimited Attempts.

Find the phasor $\mathbf{I} = a + jb$.

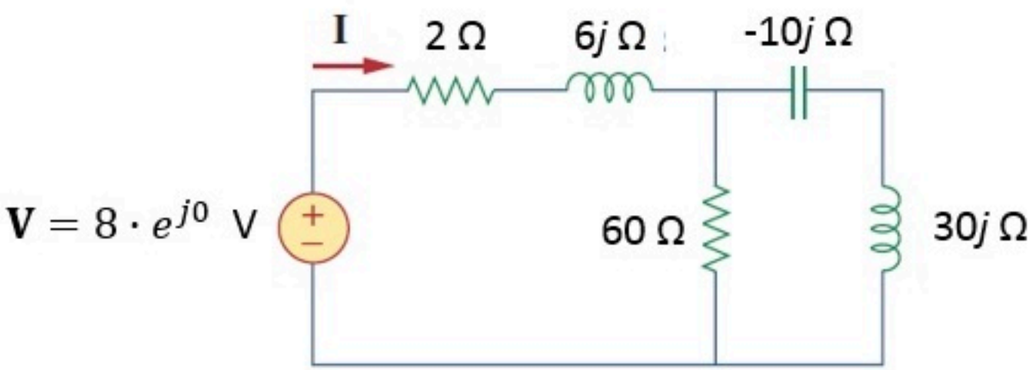

Given Variables:

. : . .

Calculate the following:

a (A) :

0.1 ✓

b (A) :

-0.3 ✓

PP Phasors 012

Unlimited Attempts.

$i_x(t) = 3\sqrt{2} \cdot \sin(5000t + 30°)$ A

Find $v_S(t) = A \cdot \cos(W \cdot t + B)$.

(with $0 \leq A$ and $-180° \leq B \leq 180°$)

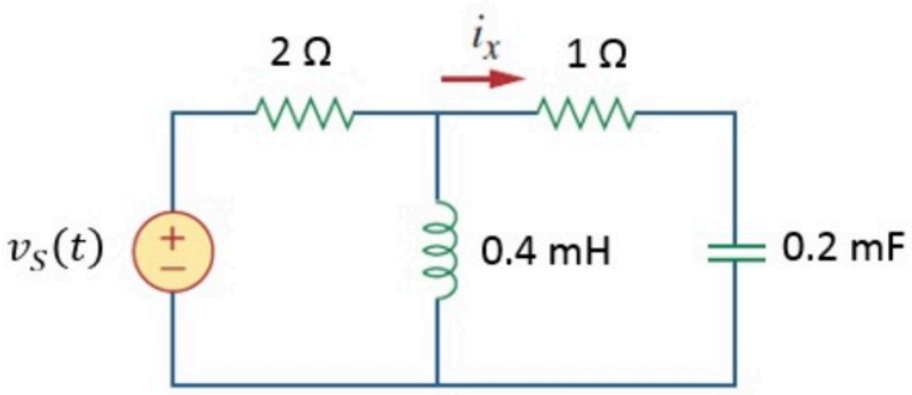

Given Variables:

. : . .

Calculate the following:

A (V) :

12 ✓

W (rad/s) :

5000 ✓

B (degrees) :

-105 ✓

Hint: Stay algebraic with Vs as long as you can

PP Phasors 013

Unlimited Attempts.

$v_S(t) = 4\sqrt{2} \cdot \cos(100t + 30°)$ V

Find $v_o(t) = A \cdot \cos(W \cdot t + B)$.

(with $0 \leq A$ and $-180° \leq B \leq 180°$)

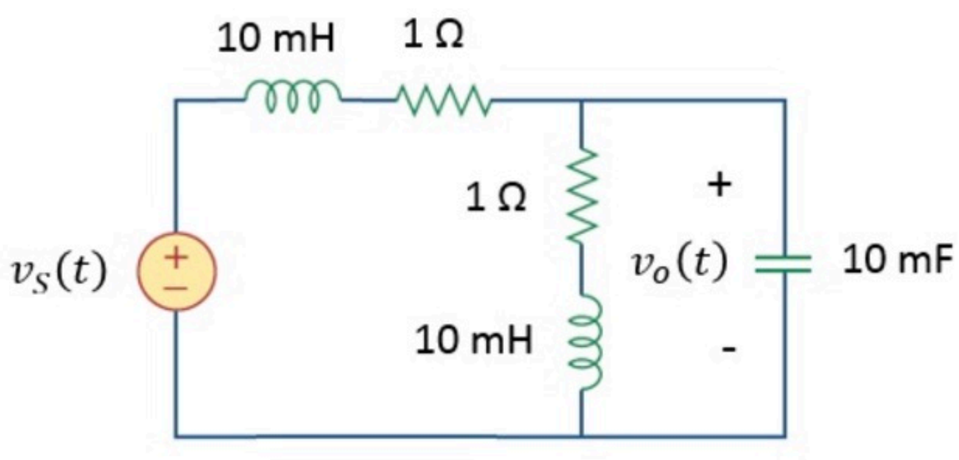

Given Variables:

. : . .

Calculate the following:

A (V) :

4 ✓

W (rad/s) :

100 ✓

B (degrees) :

-15 ✓

Hint: Use voltage divider.

PP Phasors 014

Unlimited Attempts.

$v_S(t) = 20 \cdot \sin(1000t + 45°)$ V

Find $v_a(t) = A \cdot \cos(W \cdot t + B)$.

(with $0 \leq A$ and $-180° \leq B \leq 180°$)

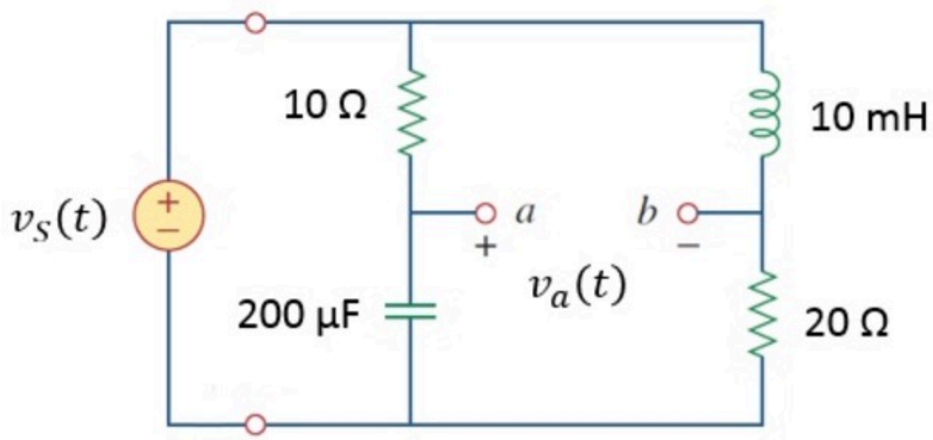

Given Variables:

. : . .

Calculate the following:

A (V) :

12 ✓

W (rad/s) :

1000 ✓

B (degrees) :

135 ✓

Hint: Use voltage divider.

PP Phasors 015

Unlimited Attempts.

Find the value of ω that results in $v_o = 0$ V.

(v_o is the voltage across the inductor and capacitor together)

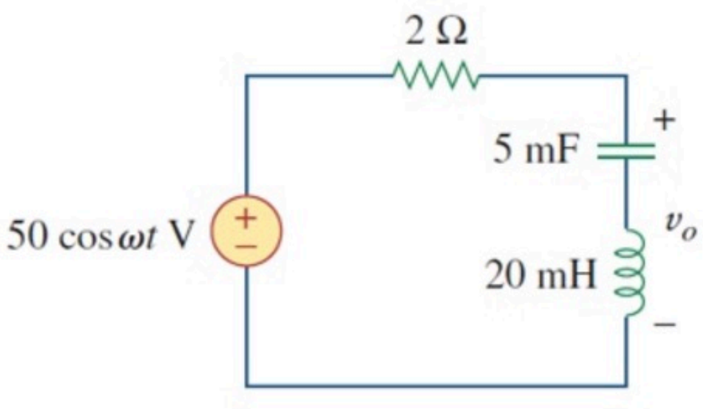

Note: This is an example of 'resonance'. For each ω, the system behaves differently (i.e., v_o is a function of ω). For this one particular value of ω, however, the inductor and capacitor perfectly 'compensate' for each other.

Given Variables:

. : . .

Calculate the following:

w (rad/s) :

100 ✓

Hint: What should be the impedance of C and L in series for vo = 0?

PP Phasors 016

Unlimited Attempts.

$v_S(t) = -\sqrt{2} \cdot \cos(1000t)$ V

Find $i_o(t) = A \cdot \cos(W \cdot t + B)$.

(with $0 \leq A$ and $-180° \leq B \leq 180°$)

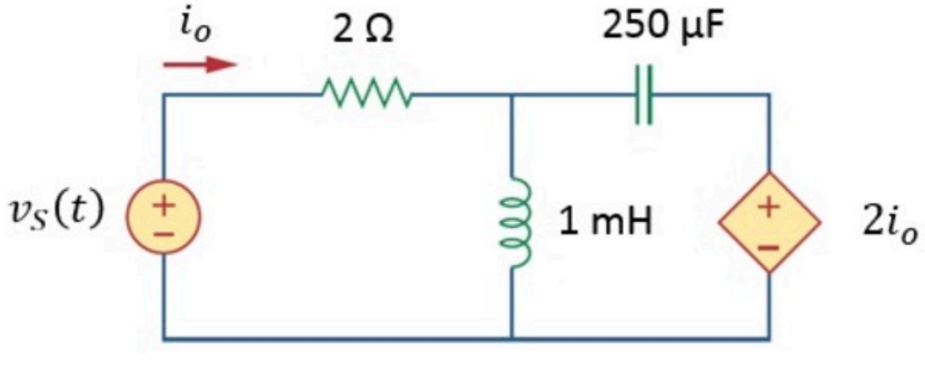

Given Variables:

. : . .

Calculate the following:

A (A) :

0.75 ✓

W (rad/s) :

1000 ✓

B (degrees) :

135 ✓

Hint: Consider nodal analysis. Leave V algebraic until the end.

PP Phasors 017

Unlimited Attempts.

Find the phasors

$\mathbf{V_o} = a + jb$ and $\mathbf{I_o} = c + j\mathrm{d}$

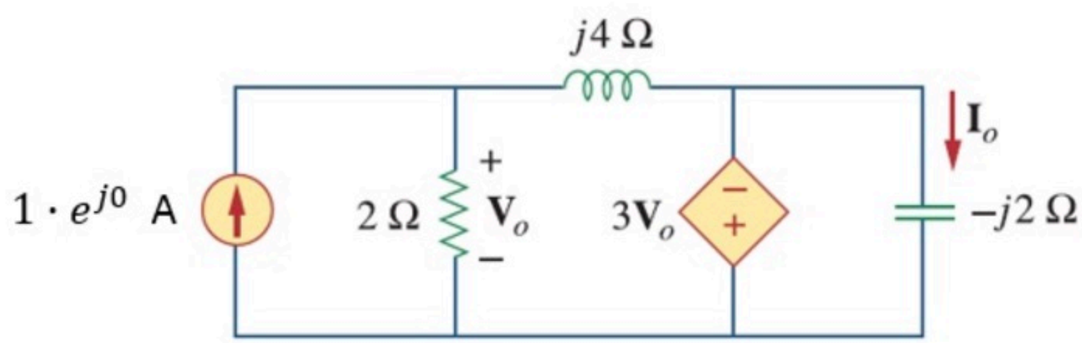

Given Variables:

. : . .

Calculate the following:

a (V) :

0.4 ✓

b (V) :

0.8 ✓

c (A) :

1.2 ✓

d (A) :

-0.6 ✓

Hint: Use mesh analysis.

PP Phasors 018

Unlimited Attempts.

Find $i_o(t) = A \cdot \cos(W \cdot t + B) + D$.

(with $0 \leq A$ and $-180° \leq B \leq 180°$)

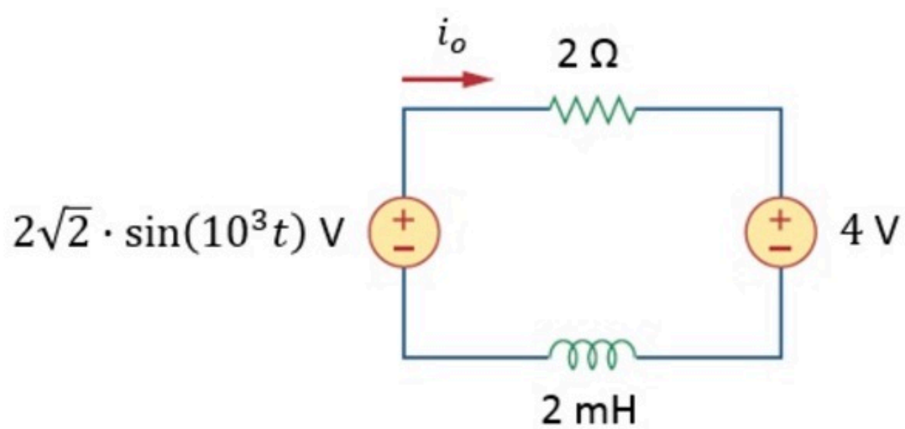

Given Variables:

. : . .

Calculate the following:

A (A) :

1 ✓

W (rad/s) :

1000 ✓

B (degrees) :

-135 ✓

D (A) :

-2 ✓

Hint: Use superposition.

PP Phasors 019

Unlimited Attempts.

$i_S(t) = 2\sqrt{2} \cdot \cos(1000t)$ A

$v_S(t) = 3\sqrt{2} \cdot \cos(3000t)$ V

Find $v_x(t) = A1 \cdot \cos(Wt + B1) + A2 \cdot \cos(3000t + B2)$.

(with $0 \leq A1, A2$ and $-180° \leq B1, B2 \leq 180°$)

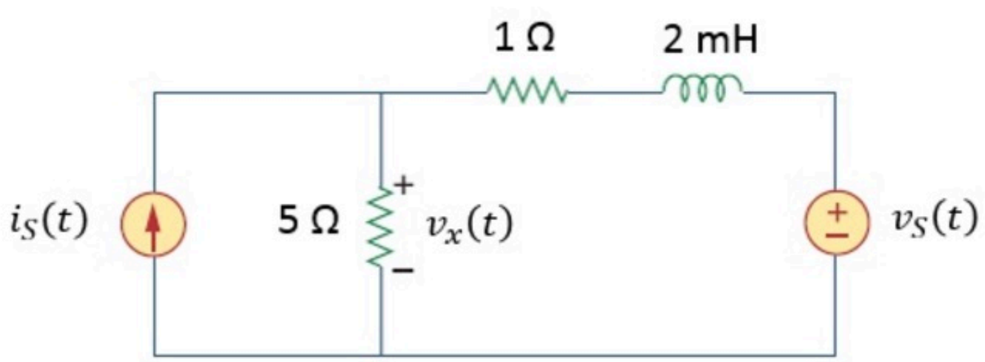

Given Variables:

. : . .

Calculate the following:

A1 (V) :

5 ✓

W (rad/s) :

1000 ✓

B1 (degrees) :

45 ✓

A2 (V) :

2.5 ✓

B2 (degrees) :

-45 ✓

Hint: Use superposition.

PP Phasors 020

Unlimited Attempts.

Find the impedance $\mathbf{Z_{in}} = a + jb$

at $\omega = 10$ krad/s.

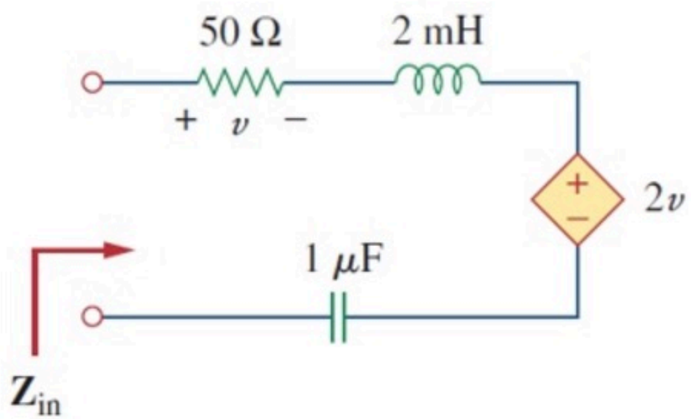

Given Variables:

. : . .

Calculate the following:

a (ohm) :

150 ✓

b (ohm) :

-80 ✓

Hint: Would you use a test voltage or a test current?

PP Phasors 022

Unlimited Attempts.

$i_S(t) = -15 \cdot \sin(10^6 t)$ A

Find the Norton equivalent model between a and b, in phasor notation:

$\mathbf{I_N} = a + jb$

$\mathbf{Z_N} = c + j\mathrm{d}$

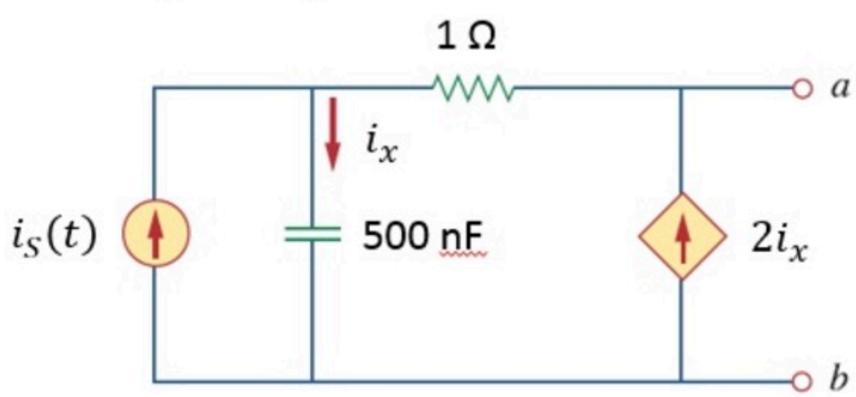

Note: This phasor Norton model is only valid for the particular frequency of the source (in this case, $\omega = 10^6$ rad/s).

Given Variables:

. : . .

Calculate the following:

a (A) :

-6 ✓

b (A) :

18 ✓

c (ohm) :

-1 ✓

d (ohm) :

2 ✓

Hint: Use a test voltage or current to find ZN.

AC power 002

Unlimited Attempts.

$v_s(t) = A_1 \cos(1000t + B_1)$

(a) Find the instantaneous power supplied by the power supply

$$p = A_2\sqrt{3} + A_3 \cos(2000t + B_3) \quad \text{with } -180° < B_3 \leq 180$$

(b) Find the instantaneous power received by the inductor

$$p = A_4\sqrt{3} + A_5 \cos(2000t + B_5) \quad \text{with } -180° < B_5 \leq 180$$

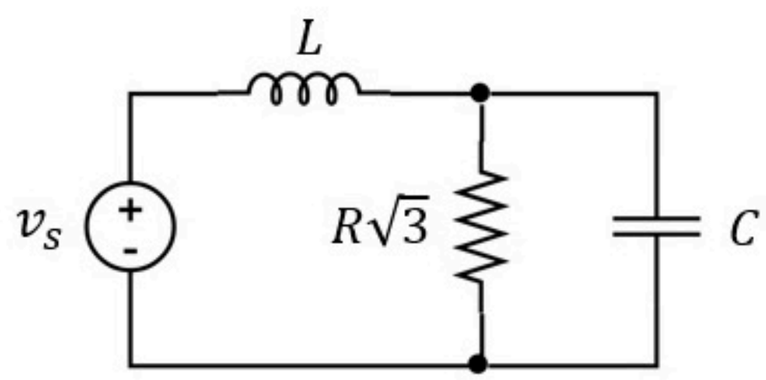

Given Variables:

A1 : 6 V

B1 : 45 degrees

R : 2 ohm

C : 500 uF

L : 1 mH

Calculate the following:

A2 (W) :

9 ✓

A3 (W) :

18 ✓

B3 (degrees) :

120 ✓

A4 (W) :

0 ✓

A5 (W) :

18 ✓

B5 (degrees) :

-120 ✓

Hint: Find the v(t) and i(t), or use the equations (video lecture)

$v_s(t) = A_1 \cos(1000t + B_1)$

(a) Find the <u>instantaneous</u> power supplied by the power supply

$$p = A_2\sqrt{3} + A_3 \cos(2000t + B_3)$$

(b) Find the <u>instantaneous</u> power received by the inductor

$$p = A_4\sqrt{3} + A_5 \cos(2000t + B_5)$$

A1 : 8 V

B1 : 135 degrees

R : 2 ohm

C : 500 uF

L : 1 mH

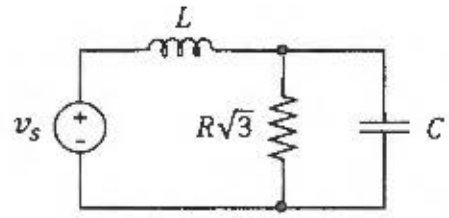

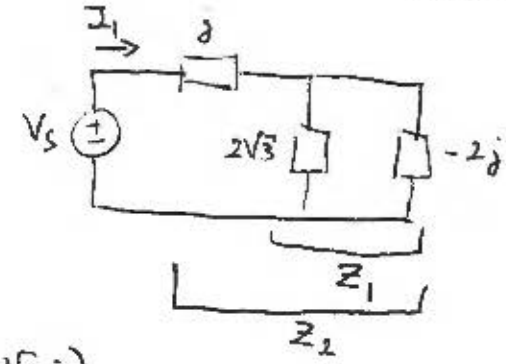

$$V_s = 8e^{j135^\circ}$$

$$Z_1 = \frac{1}{\frac{1}{2\sqrt{3}} + \frac{j}{2}} = \frac{2\sqrt{3}}{1+\sqrt{3}j} = \frac{\sqrt{3}}{2}(1-\sqrt{3}j)$$

$$Z_2 = Z_1 + j = \frac{\sqrt{3}}{2} - \frac{j}{2} = 1 \cdot e^{-30^\circ} \qquad I_1 = \frac{V_s}{Z_2} = 8e^{j165^\circ}$$

<u>INSTANTANEOUS POWER</u>

$$P = \frac{1}{2} V_m I_m \cos(\theta_v - \theta_i) + \frac{1}{2} V_m I_m \cos(2\omega t + \theta_v + \theta_i)$$

(a) $V = V_s \Rightarrow V_m = 8V \quad \theta_v = 135^\circ$

$I = I_1 \Rightarrow I_m = 8A \quad \theta_i = 165^\circ$

$$A_2\sqrt{3} = \frac{1}{2} V_m I_m \cos(\theta_v - \theta_i) = \frac{1}{2} \cdot 8 \cdot 8 \cdot \cos(-30^\circ) = 16\sqrt{3} \Rightarrow \boxed{A_2 = 16W}$$

$$A_3 = \frac{1}{2} V_m I_m = \frac{1}{2} \cdot 8 \cdot 8 \Rightarrow \boxed{A_3 = 32W} \qquad B_3 = \theta_v + \theta_i = 300^\circ \quad \boxed{B_3 = -60^\circ}$$

(b) $I = I_1 \Rightarrow I_m = 8A \quad \theta_i = 165^\circ$

$V = jI_1 \Rightarrow V_m = 8V \quad \theta_v = 165^\circ + 90^\circ = 255^\circ$

$$A_4\sqrt{3} = \frac{1}{2} V_m I_m \cos(\theta_v - \theta_i) = \frac{1}{2} \cdot 8 \cdot 8 \cos(90^\circ) = 0 \Rightarrow \boxed{A_4 = 0W}$$

$$A_5 = \frac{1}{2} V_m I_m = \frac{1}{2} \cdot 8 \cdot 8 \Rightarrow \boxed{A_5 = 32W} \qquad B_5 = \theta_v + \theta_i = 420^\circ$$

$$\boxed{B_5 = 60^\circ}$$

AC power 003

Problem has been graded.

Find I_{rms} for this waveform.

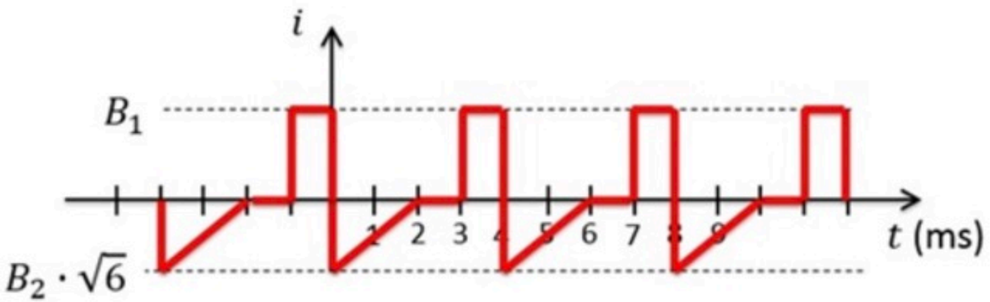

Given Variables:

B1 : 6 A

B2 : -4 A

Calculate the following:

Irms (A) :

5

Hint: Square the time waveform, integrate, average and take sqrt()

Find I_{rms} for this waveform.

B1 : 6 A

B2 : -4 A

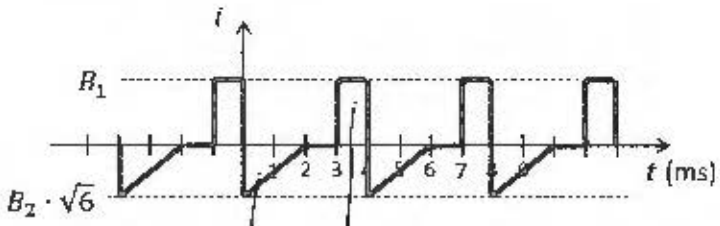

$$i(t) = 6 \Rightarrow i(t)^2 = 36$$

$$i(t) = 2\sqrt{6}(t-2) \Rightarrow i(t)^2 = 24(t-2)^2$$

$$\int_0^4 i^2 dt = \int_0^2 24(t-2)^2 dt + \int_3^4 36\, dt$$

$$= 24 \left.\frac{(t-2)^3}{3}\right|_0^2 + 36$$

$$= 8 \cdot (0 - (-2)^3) + 36$$

$$= 64 + 36$$

$$= 100$$

$$\sqrt{\frac{1}{4}\int_0^4 i^2 dt} = \sqrt{\frac{1}{4} \cdot 100} = 5 \Rightarrow \boxed{I_{RMS} = 5A}$$

AC power 004

Problem has been graded.

You are told that the sources in the two circuits below supply the same average power.

(a) Find the average power P supplied.

(b) Find A_1.

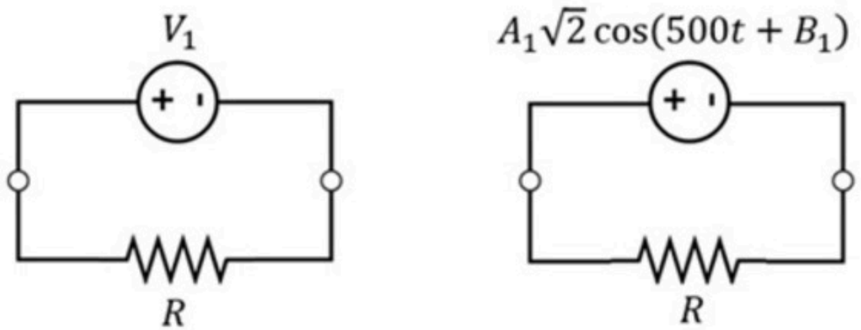

Given Variables:

V1 : 10 V

R : 5 ohm

B1 : 135 degrees

Calculate the following:

P (W) :

20 ✓

A1 (V) :

10 ✓

Hint: What is the definition of Vrms?

You are told that the sources in the two circuits below supply the same average power.

(a) Find the average power P supplied.

(b) Find A_1.

V1 : 6 V

R : 2 ohm

B1 : 60 degrees

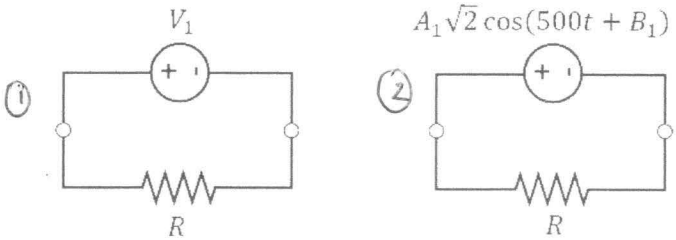

(a) CIRCUIT (1) : $P = \frac{V_1^2}{R} = \frac{36}{2} \Rightarrow \boxed{P = 18\,W}$

(b) FOR THE SAME AVERAGE POWER

$$\left.\begin{aligned} V_{RMS} &= V_1 = 6\,V \\ V_{RMS} &= \frac{V_m}{\sqrt{2}} = \frac{A_1\cancel{\sqrt{2}}}{\cancel{\sqrt{2}}} \end{aligned}\right\} \Rightarrow \boxed{A_1 = 6\,V}$$

AC power 005

0 of 5 attempts made

$v_s(t) = A_1 \cos(500t + B_1)$

Find the complex power $\mathbf{S_1} = a_1 + b_1 j$ received by the source v_S.

Find the complex power $\mathbf{S_2} = a_2 + b_2 j$ received by the resistor R_1.

Find the complex power $\mathbf{S_3} = a_3 + b_3 j$ received by the resistor R_2.

Find the complex power $\mathbf{S_4} = a_4 + b_4 j$ received by the inductor L_1.

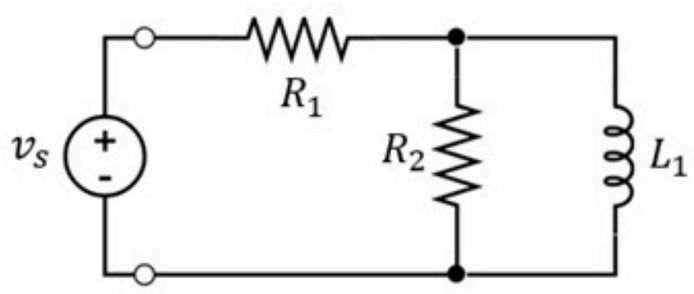

Given Variables:

A1 : 6 V

B1 : 45 degrees

R1 : 4 ohm

R2 : 4 ohm

L1 : 8 mH

Calculate the following:

a1 (W) :

-2.7 ✓

b1 (VAR) :

-0.9 ✓

a2 (W) :

1.8 ✓

b2 (VAR) :

0 ✓

a3 (W) :

0.9 ✓

b3 (VAR) :

0 ✓

a4 (W) :

0 ✓

b4 (VAR) :

0.9 ✓

$v_s(t) = A_1 \cos(500t + B_1)$

Find the complex power $\mathbf{S_1} = a_1 + b_1 j$ received by the source v_S.

Find the complex power $\mathbf{S_2} = a_2 + b_2 j$ received by the resistor R_1.

Find the complex power $\mathbf{S_3} = a_3 + b_3 j$ received by the resistor R_2.

Find the complex power $\mathbf{S_4} = a_4 + b_4 j$ received by the inductor L_1.

A1 : 3 V

B1 : 30 degrees

R1 : 1 ohm

R2 : 2 ohm

L1 : 4 mH

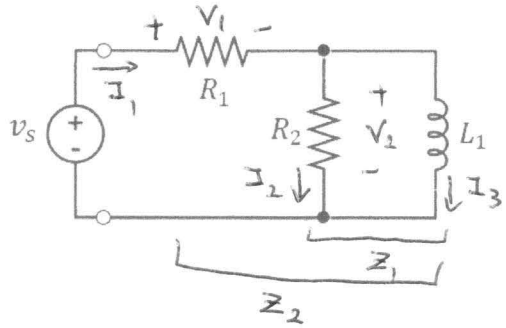

$Z_L = 2j$

$$Z_1 = \frac{1}{\frac{1}{2} - \frac{j}{2}} = \frac{2}{1-j} = 1+j$$

$$Z_2 = Z_1 + 1 = 2+j$$

$$V_S = 3e^{j30^\circ} \qquad I_1 = \frac{V_S}{Z_2} \qquad V_1 = 1 \cdot I_1 \qquad V_2 = Z_1 I_1$$

$$I_2 = \frac{V_1}{2}$$

$$I_3 = \frac{V_1}{2j}$$

(a) $S_1 = \frac{1}{2} V_S(-I_1^*) = -\frac{1}{2}\frac{V_S \cdot V_S^*}{Z_2^*} = -\frac{|V_S|^2}{2}\frac{Z_2}{|Z_2|^2} = -\frac{9}{2}\frac{(2+j)}{5}$

$\boxed{a_1 = -1.8\,W}$

$\boxed{b_1 = -0.9\,VAR}$

(b) $S_2 = \frac{1}{2} V_1 I_1^* = \frac{I_1 I_1^*}{2} = \frac{|I_1|^2}{2} = \frac{|V_S|^2}{2|Z_2|^2} = \frac{9}{2 \cdot 5}$

$\boxed{a_2 = 0.9\,W}$

$\boxed{b_2 = 0\,VAR}$

(c) $S_3 = \frac{1}{2} V_2 I_2^* = \frac{1}{2} V_2 \frac{V_2^*}{2} = \frac{|V_2|^2}{4} = \frac{|Z_1|^2 |I_1|^2}{4} = \frac{|Z_1|^2}{4} \cdot \frac{|V_S|^2}{|Z_2|^2} = \frac{2 \cdot 9}{4 \cdot 5}$

$\boxed{a_3 = 0.9\,W}$

$\boxed{b_3 = 0\,VAR}$

(d) $S_4 = \frac{1}{2} V_2 I_3^* = \frac{1}{2} V_2 \frac{V_2^*}{(2j)^*} = j\frac{|V_2|^2}{4} = j\frac{|Z_1|^2}{4} \cdot \frac{|V_S|^2}{|Z_2|^2} = j\frac{2 \cdot 9}{4 \cdot 5}$

$\boxed{a_4 = 0\,W}$

$\boxed{b_4 = 0.9\,VAR}$

CHECK: $S_1 + S_2 + S_3 + S_4 = -1.8 + 0.9 + 0.9 + 0 - 0.9j + 0j + 0j + 0.9j = 0$

$(\Sigma\,\text{REC.} = \Sigma\,\text{SUPPL.})$

AC power 006

No more attempts left.

For the system below, the source is represented in phasor-notation as:

$$\mathbf{Z_1} = A_1 + jB_1 \qquad \mathbf{V_S} = A_2 \cdot e^{jB_2}$$

(a) Find the load impedance $\mathbf{Z_L} = A_3 + jB_3$ that results in the maximum power being received by this load.

(b) Find the maximum average power P received by the load.

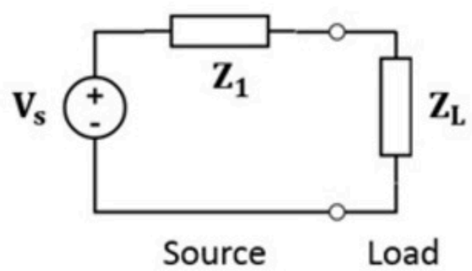

Given Variables:

A1 : 5 ohm

B1 : 4 ohm

A2 : 2 V

B2 : 75 degrees

Calculate the following:

A3 (ohm) :

5 ✓

B3 (ohm) :

-4 ✓

P (W) :

0.1 ✓

Hint: Keep your calculations algebraic as long as you can.

For the system below, the source is represented in phasor-notation as:

$$\mathbf{Z_1} = A_1 + jB_1 \qquad \mathbf{V_S} = A_2 \cdot e^{jB_2}$$

(a) Find the load impedance $\mathbf{Z_L} = A_3 + jB_3$ that results in the maximum power being received by this load.

(b) Find the maximum average power P received by the load.

A1 : 1 ohm

B1 : -8 ohm

A2 : 4 V

B2 : 65 degrees

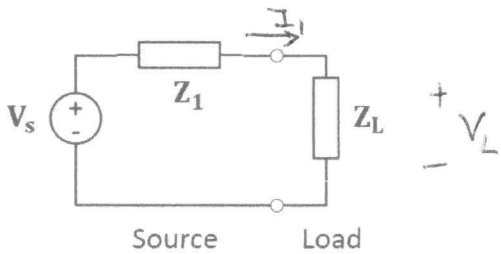

(a) $Z_L = Z_1^* \Rightarrow Z_L = 1 + j8$

$\boxed{A_3 = 1\Omega}$

$\boxed{B_3 = 8\Omega}$

(b) $I_1 = \dfrac{V_S}{Z_1 + Z_L}$ $\qquad Z_1 + Z_L = 2$

$V_S = 4e^{j65°}$ $\qquad V_L = Z_L \cdot I_1$

$$S_L = \frac{1}{2} V_L \cdot I_1^* = \frac{1}{2} Z_L \cdot I_1 \cdot I_1^* = \frac{Z_L}{2} |I_1|^2 = \frac{Z_L}{2} \frac{|V_S|^2}{|Z_1 + Z_L|^2}$$

$$= \frac{(1+j8)}{2} \cdot \frac{4^2}{2^2} = (1+j8) \cdot 2 = \underbrace{2}_{P} + \underbrace{16}_{Q} j$$

$\boxed{P = 2W}$

AC power 008

Problem has been graded.

Both v_S and i_S are AC sources with $\omega = 400$ rad/s. Someone did two measurements on the circuit and found:

$$v_1(t) = A_1 \cos(400t + B_1)$$ *(this is v_1, not v_S !)*

$$i_S(t) = 2\cos\left(400t + \frac{\pi}{6}\right)$$

(a) Find the average power P_1 received by the resistor
(b) Find the average power P_2 supplied by current source i_S
(c) Find the average power P_3 received by the inductor

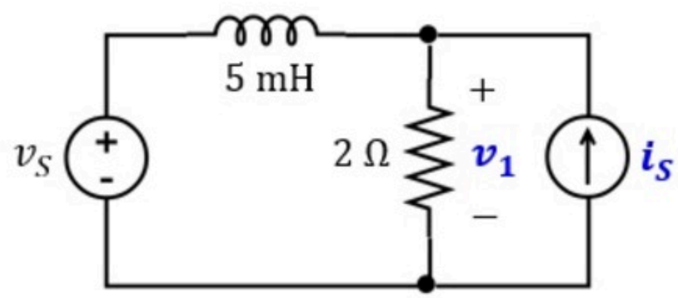

Given Variables:

A1 : 8 V

B1 : 90 degrees

Calculate the following:

P1 (W) :

16 ✓

P2 (W) :

4 ✓

P3 (W) :

0 ✓

Hint: Find S symbolically first. Find phasors and plug in. For c, what do you know about the element?

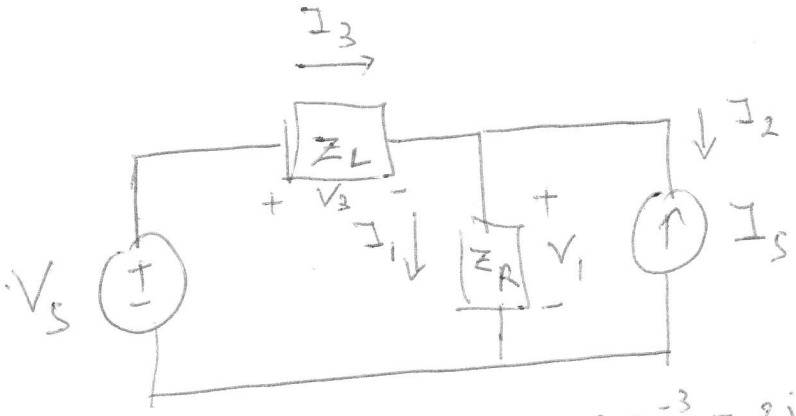

$A_1 : 10\,V$

$B_1 : -90^\circ$

$Z_L = j\omega L = j \cdot 400 \cdot 5 \cdot 10^{-3} = 2j$ $\qquad Z_R = 2$

(a) $S_1 = \frac{1}{2} V_1 \cdot I_1^*$ $\qquad I_1 = \frac{V_1}{Z_R}$

$= \frac{1}{2} V_1 \left(\frac{V_1}{Z_R}\right)^* = \frac{1}{2} \frac{V_1 V_1^*}{Z_R} = \frac{|V_1|^2}{2} \cdot \frac{1}{Z_R} = \frac{A_1^2}{2} \cdot \frac{1}{Z_R} = \frac{100}{2 \cdot 2} = 25$

$P_1 = Re[S_1]$ $\qquad \boxed{P_1 = 25\,W}$ received

(b) $S_2 = \frac{1}{2} V_1 I_2^*$ ⇝ PASSIVE SIGN CONVENTION (POWER RECEIVED)

$= \frac{1}{2} V_1 (-I_S)^*$ $\qquad \left(\begin{array}{l} V_1 = A_1 e^{jB_1} = 10\, e^{-j\frac{\pi}{2}} \\ I_S = 2\, e^{j\frac{\pi}{6}} \end{array} \right.$

$= -\frac{1}{2} V_1 I_S^*$

$= -\frac{1}{2} \cdot 10\, e^{-j\frac{\pi}{2}} \cdot 2\, e^{-j\frac{\pi}{6}} = -10\, e^{-j\frac{4\pi}{6}} = -10\, e^{-j\frac{2\pi}{3}}$

$P_2 = Re[S_2] = -10 \cos\left(-\frac{2\pi}{3}\right) = -10\left(-\frac{1}{2}\right) = +5$ ⇝ received

$\boxed{P_2 = -5\,W}$ supplied

(c) $\boxed{P_3 = 0\,W}$ inductor always has $P = 0$

we can check: $S_3 = \frac{1}{2} V_3 I_3^*$ $\qquad V_3 = Z_L \cdot I_3$

$= \frac{1}{2} Z_L I_3 I_3^* = \frac{Z_L}{2} |I_3|^2 = \underbrace{\frac{|I_3|^2}{2} \cdot (2j)}$

no real part ⇒ $P = Re[S] = 0$

PP AC power 001

Unlimited Attempts.

In the diagram are the phasors of the voltage across an element and the current through that element (according to the passive sign convention).

What is the average power *P* received by the element?

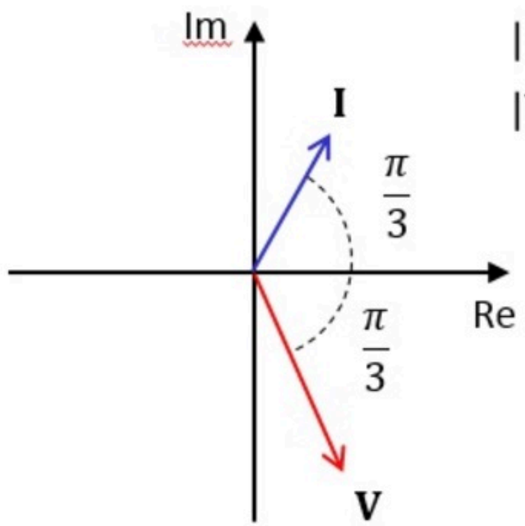

$|\mathbf{I}| = 3$ A

$|\mathbf{V}| = 4$ V

Given Variables:

. : . .

Calculate the following:

P (W) :

-3

Hint: Write average power as a function of the angle between the voltage and current.

$$I = 3e^{j\frac{\pi}{3}}$$

$$V = 4e^{-j\frac{\pi}{3}}$$

$$p = \frac{1}{2} V_m I_m \cos(\theta_v - \theta_i)$$

$$= \frac{1}{2} \cdot 4 \cdot 3 \cdot \cos\left(-\frac{\pi}{3} - \frac{\pi}{3}\right)$$

$$= \frac{1}{2} \cdot 4 \cdot 3 \cdot \cos\left(-\frac{2\pi}{3}\right)$$

$$= \frac{1}{2} \cdot 4 \cdot 3 \left(-\frac{1}{2}\right)$$

$$= -3$$

$$\boxed{p = -3W}$$

↳ SO THIS ELEMENT SUPPLIES POWER

PP AC power 002

Unlimited Attempts.

In the diagram are the phasors of the voltage across an element and the current through that element (according to the passive sign convention).

What is the average power *P* received by the element?

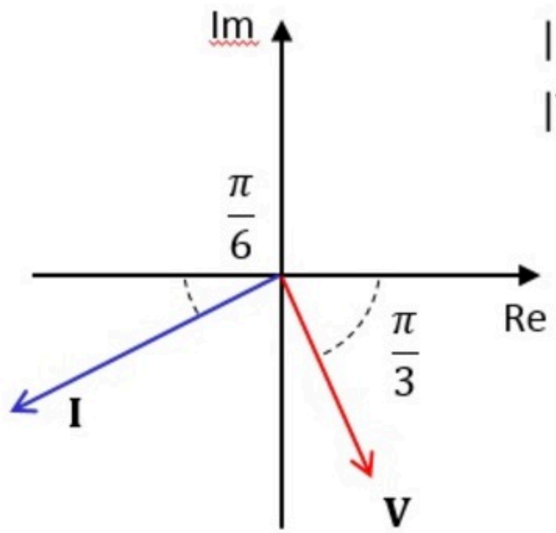

$|\mathbf{I}| = 8$ A

$|\mathbf{V}| = 5$ V

Given Variables:

. : . .

Calculate the following:

P (W) :

0

Hint: Write average power as a function of the angle between the voltage and current.

$$I = 8\, e^{-j\frac{5\pi}{6}}$$

$$V = 5\, e^{-j\frac{\pi}{3}}$$

$$P = \frac{1}{2} \cdot I_m \cdot V_m \cos(\theta_v - \theta_i)$$

$$= \frac{1}{2} \cdot 8 \cdot 5 \cdot \cos\left(-\frac{\pi}{3} + \frac{5\pi}{6}\right)$$

$$= \frac{1}{2} \cdot 8 \cdot 5 \cdot \cos\left(\frac{\pi}{2}\right)$$

$$= \frac{1}{2} \cdot 8 \cdot 5 \cdot 0$$

$$\boxed{P = 0\ W}$$

$\rightsquigarrow$ AS EXPECTED SINCE V & I ARE ORTHOGONAL

IN THIS CASE, "I LAGS V" BY $90°$ $\Rightarrow$ THE ELEMENT IS AN INDUCTOR

$$I = \frac{V}{j\omega L} = \frac{V}{\omega L}\, e^{-j\frac{\pi}{2}}$$

PP AC power 003

Unlimited Attempts.

Find I_{rms} for this waveform.

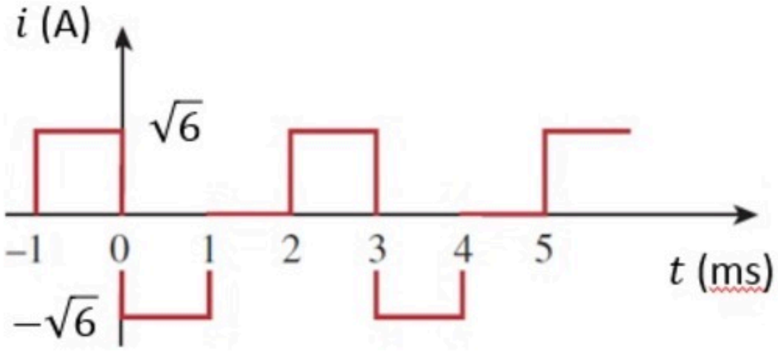

Given Variables:

. : . .

Calculate the following:

Irms (A) :

2

Hint: Square the waveform first.

$$A = \frac{1}{T} \int_0^T i^2 \, dt$$

$$= \frac{1}{3 \cdot 10^{-3}} \cdot \left[(-\sqrt{6})^2 \cdot 10^{-3} + 0 + (\sqrt{6})^2 \cdot 10^{-3} \right]$$

$$= \frac{1}{3} \left[6 + 6 \right]$$

$$= 4$$

$$I_{RMS} = \sqrt{A} \quad \Rightarrow \quad \boxed{I_{RMS} = 2}$$

PP AC power 004

Unlimited Attempts.

Find V_{rms} for this waveform.

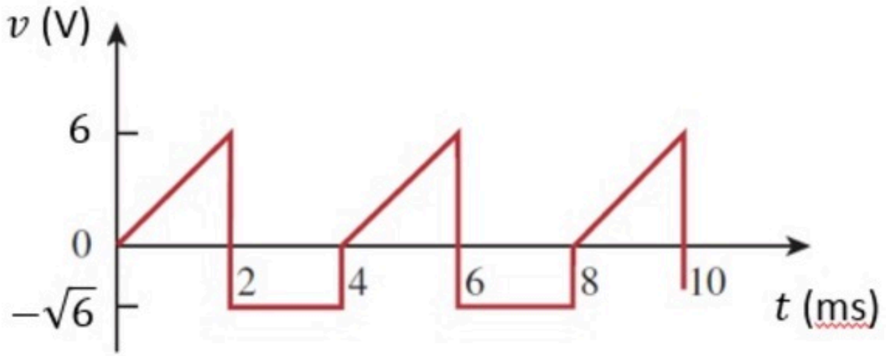

Given Variables:

. : . .

Calculate the following:

Vrms (V) :

3

Hint: Write the equation of the waveform in parts.

$\boxed{\text{OPTION 1}}$ t EXPRESSED IN SECONDS

$$f(t) = 3\cdot 10^{3}\cdot t \quad , \quad 0 \leq t < 2\cdot 10^{-3}$$
$$= -\sqrt{6} \quad , \quad 2\cdot 10^{-3} \leq t < 4\cdot 10^{-3}$$

$$\frac{1}{T}\int_0^T f^2(t)\,dt = \frac{1}{4\cdot 10^{-3}}\left[\int_0^{2\cdot 10^{-3}} (3\cdot 10^{3}\,t)^2\,dt + \int_{2\cdot 10^{-3}}^{4\cdot 10^{-3}} (-\sqrt{6})^2\,dt\right.$$

$$= \frac{1}{4\cdot 10^{-3}}\left[9\cdot 10^{6}\cdot \frac{t^3}{3}\Big|_0^{2\cdot 10^{-3}} + 6\cdot 2\cdot 10^{-3}\right]$$

$$= \frac{1}{4\cdot 10^{-3}}\left[\frac{9\cdot 8}{3}\cdot 10^{-3} + 12\cdot 10^{-3}\right]$$

$$= \frac{24+12}{4} = \frac{36}{4} = 9$$

$$\sqrt{\frac{1}{T}\int_0^T f^2(t)\,dt} = \boxed{V_{RMS} = 3V}$$

$\boxed{\text{OPTION 2}}$ t EXPRESSED IN ms

$$f(t) = 3\cdot t \quad , \quad 0 \leq t < 2$$
$$= -\sqrt{6} \quad , \quad 2 \leq t < 4$$

$$\frac{1}{T}\int_0^T f^2(t)\,dt = \frac{1}{4}\left[\int_0^2 (3t)^2\,dt + \int_2^4 (-\sqrt{6})^2\,dt\right] = \frac{1}{4}\left[9\,\frac{t^3}{3}\Big|_0^2 + 6\cdot 2\right]$$

$$= \frac{1}{4}\left[\frac{9\cdot 8}{3} + 12\right] = \frac{36}{4} = 9$$

$$\boxed{V_{RMS} = 3\,V}$$

PP AC power 005

Unlimited Attempts.

Find I_{rms} for this waveform (it is a sine wave that has an offset, i.e., it is shifted up).

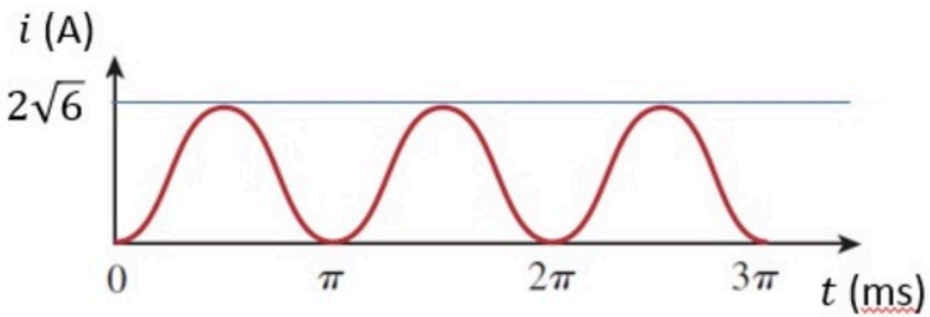

Given Variables:

. : . .

Calculate the following:

Irms (A) :

3

Hint: Utilize the fact that you know the Irms for a sine wave.

$$i = \sqrt{6} - \sqrt{6}\cos(\omega t) = \sqrt{6}\left(1 - \cos(\omega t)\right)$$

$$i^2 = 6\left(1 - \cos(\omega t)\right)^2$$

$$A = \frac{1}{T}\int_0^T i^2 dt = \frac{6}{T}\int_0^T \left[1 - 2\cos(\omega t) + \cos^2(\omega t)\right] dt$$

$$= \frac{6}{T}\int_0^T dt - \frac{12}{T}\int_0^T \cos(\omega t)\, dt + \frac{6}{T}\int_0^T \cos^2(\omega t)\, dt$$

$$= \frac{6}{T}\cdot T - \frac{12}{T}\cdot 0 + 6\cdot\frac{1}{2}$$

↳ WE KNOW FOR A COS

$$I_{RMS} = \frac{I_M}{\sqrt{2}} \Rightarrow I_{RMS}^2 = \frac{I_M^2}{2}$$

$$I_{RMS}^2 = \frac{I_M^2}{T}\int_0^T \cos^2(\omega t)\, dt$$

$$\Rightarrow \frac{1}{T}\int_0^T \cos^2(\omega t)\, dt = \frac{1}{2}$$

$$A = 6 + \frac{6}{2} = 9$$

$$I_{RMS} = \sqrt{A} \Rightarrow \boxed{I_{RMS} = 3\,A}$$

PP AC power 006

Unlimited Attempts.

$v_S(t) = 10\sqrt{2} \cdot \cos\left(10^6 t + \frac{\pi}{6}\right)$ V

Find the average power P_1 supplied by the source v_S.
Find the average power P_2 received by the 5 Ω resistor.
Find the average power P_3 received by the 4 Ω resistor.
Find the average power P_4 received by the capacitor.
Find the average power P_5 received by the inductor.

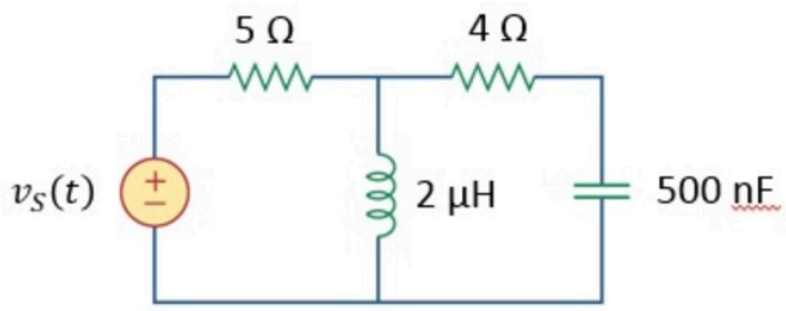

Given Variables:

. : . .

Calculate the following:

P1 (W) :

15 ✓

P2 (W) :

12.5 ✓

P3 (W) :

2.5 ✓

P4 (W) :

0 ✓

P5 (W) :

0 ✓

Hint: Find S first for each element. Keep Vs algebraic. Can you predict P for the cap and inductor? Check.

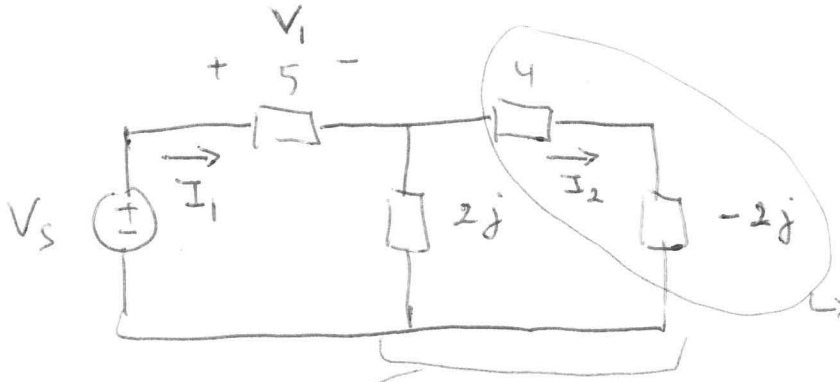

$\rightarrow Z_1 = 4-2j$

$$\rightarrow Z_2 = \frac{1}{\frac{1}{2j} + \frac{1}{4-2j}} = \frac{2j(4-2j)}{4-\cancel{2j}+\cancel{2j}} = j(2-j) = 1+2j$$

$$I_1 = \frac{V_S}{5+Z_2} = \frac{V_S}{6+2j}$$

① $S_1 = \frac{1}{2} V_S \cdot I_1^*$ (SUPPLIED!) $V_S \overset{+}{\underset{-}{}} \uparrow I_1$

$$= \frac{1}{2} V_S \frac{V_S^*}{6-2j} = \frac{|V_S|^2}{2} \cdot \frac{6+2j}{40} = \frac{100 \cdot 2}{2}\left(\frac{6+2j}{40}\right) \qquad P_1 = Re[S_1]$$

$$\boxed{P_1 = 15\,W}$$

② $S_2 = \frac{1}{2} V_1 I_1^* = \frac{1}{2} \cdot Z_{5\Omega} \cdot I_1 \cdot I_1^* = \frac{1}{2} Z_{5\Omega} |I_1|^2$

$$S_2 = \frac{1}{2} \cdot 5 \cdot \frac{|V_S|^2}{|6+2j|^2} = \frac{5}{2} \cdot \frac{100 \cdot 2}{40} = 12.5 \qquad \boxed{P_2 = 12.5\,W}$$

③ $I_2 = I_1 \cdot \frac{2j}{2j+Z_1} = I_1 \cdot \frac{2j}{2j+4-2j} = I_1 \frac{2j}{4} = I_1 \frac{j}{2}$

$$S_3 = \frac{1}{2} Z_{4\Omega} |I_2|^2 = \frac{1}{2} \cdot 4 \cdot |I_1|^2 \cdot \frac{|j|^2}{4} = \frac{|I_1|^2}{2} = \frac{1}{2} \cdot \frac{|V_S|^2}{|6+2j|^2}$$

$$= \frac{1}{2} \cdot \frac{100 \cdot 2}{40} = 2.5 \qquad \boxed{P_3 = 2.5\,W}$$

WE KNOW A CAPACITOR AND INDUCTOR ONLY HAVE REACTIVE POWER $\Rightarrow$ $\boxed{P_4 = P_5 = 0}$

<u>CHECK</u>: $P_{REC.} = P_{SUPPLIED} \Rightarrow 12.5 + 2.5 = 15$ <u>OK</u>

PP AC power 007

Unlimited Attempts.

$$i_S(t) = 2 \cdot \cos\left(10^3 t + \frac{\pi}{4}\right) \text{ A}$$

Find the complex power $\mathbf{S_1} = a_1 + b_1 j$ supplied by the source i_S.
Find the complex power $\mathbf{S_2} = a_2 + b_2 j$ received by the 10 Ω resistor.
Find the complex power $\mathbf{S_3} = a_3 + b_3 j$ received by the 2 Ω resistor.
Find the complex power $\mathbf{S_4} = a_4 + b_4 j$ received by the CCVS.
Find the complex power $\mathbf{S_5} = a_5 + b_5 j$ received by the inductor.
Find the complex power $\mathbf{S_6} = a_6 + b_6 j$ received by the capacitor.

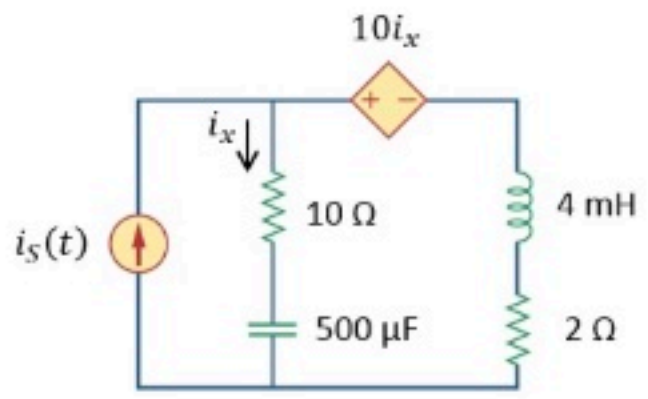

Given Variables:

. : . .

Calculate the following:

a1 (W) :

32 ✓

b1 (VAR) :

4 ✓

a2 (W) :

50 ✓

b2 (VAR) :

0 ✓

a3 (W) :

2 ✓

b3 (VAR) :

0 ✓

a4 (W) :

-20 ✓

b4 (VAR) :

10 ✓

a5 (W) :

0 ✓

b5 (VAR) :

4 ✓

a6 (W) :

0 ✓

b6 (VAR) :

-10 ✓

Hint: Keep Is algebraic.

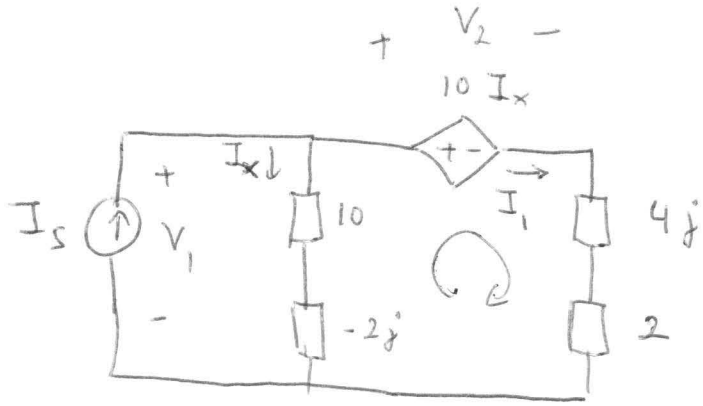

$I_1 = I_s - I_x$

$|I_s|^2 = 4$

<u>KVL</u>: $I_x(10-2j) = 10 I_x + (2+4j) I_1$

$= 10 I_x + (2+4j)(I_s - I_x)$

$I_x(\cancel{10} - 2j - \cancel{10} + 2 + 4j) = (2+4j) I_s$

$I_x(2+2j) = I_s(2+4j) \Rightarrow I_x = I_s \frac{(1+2j)}{(1+j)} = I_s \frac{(3+j)}{2}$

(1) $V_1 = I_x(10-2j) = I_s \frac{(3+j)(10-2j)}{2} = I_s(16+2j)$

NOTE DIRECTION OPPOSITE PASSIVE SIGN CONVENTION

$S_1 = \frac{1}{2} V_1 \cdot I_s^* = \frac{1}{2} I_s(16+2j) I_s^* = |I_s|^2(8+j) \Rightarrow \boxed{S_1 = 32 + 4j}$

(2) $S_2 = \frac{1}{2} \cdot Z_{10\Omega} \cdot |I_x|^2 = \frac{1}{2} \cdot 10 \cdot |I_s|^2 \cdot \frac{(10)}{4} \Rightarrow \boxed{S_2 = 50 + 0j}$

AS EXPECTED

(3) $I_1 = I_s - I_x = I_s\left(1 - \frac{(3+j)}{2}\right) = I_s \frac{(-1-j)}{2}$

$S_3 = \frac{1}{2} Z_{2\Omega} |I_1|^2 = \frac{1}{2} \cdot 2 |I_s|^2 \cdot \frac{|-1-j|^2}{4} = \frac{|I_s|^2}{4} \cdot 2 \Rightarrow \boxed{S_2 = 2 + 0j}$

(4) $S_4 = \frac{1}{2} V_2 I_1^* = \frac{1}{2} \cdot 10 I_x \cdot I_1^* = 5 \cdot I_s \frac{(3+j)}{2} \cdot I_s^* \frac{(-1+j)}{2} = |I_s|^2 \cdot \frac{5}{4}(-4+2j)$

$\Rightarrow \boxed{S_4 = -20 + 10j}$ RECEIVED SINCE WE USED PASSIVE SIGN CONVENTION

(5) $S_5 = \frac{1}{2} Z_L \cdot |I_1|^2 = \frac{1}{2} \cdot 4j |I_s|^2 \cdot \frac{|-1-j|^2}{4} = 2j \cdot 4 \cdot \frac{2}{4} \Rightarrow \boxed{S_5 = 0 + 4j}$

AS EXPECTED

(6) $S_6 = \frac{1}{2} Z_c |I_x|^2 = \frac{1}{2}(-2j)|I_s|^2 \frac{|3+j|^2}{4} = -j \cdot 4 \cdot \frac{10}{4} \Rightarrow \boxed{S_6 = 0 - 10j}$

CHECK: $\Sigma P_{REC} = \Sigma P_{SUPPL} \Rightarrow 50 + 2 - 20 = 32$ <u>OK</u>

$\Sigma Q_{REC} = \Sigma Q_{SUPPL} \Rightarrow 10 + 4 - 10 = 4$ <u>OK</u>

PP AC power 008

Unlimited Attempts.

Find the value of $\mathbf{Z_L} = a + jb$ that will receive the maximum amount of power

Find the resulting complex power $\mathbf{S} = c + jd$ received by the load.

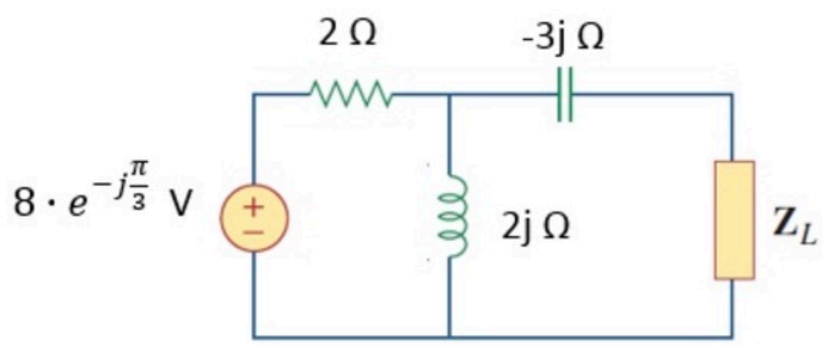

Given Variables:

. : . .

Calculate the following:

a (ohm) :

1 ✓

b (ohm) :

2 ✓

c (W) :

4 ✓

d (VAR) :

8 ✓

Hint: Set the independent source to zero. Find Zth.

(1)

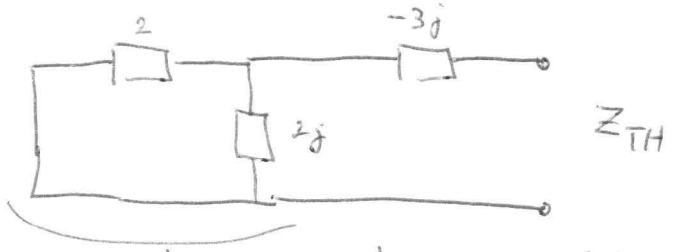

$$\hookrightarrow Z_1 = \frac{1}{\frac{1}{2}+\frac{1}{2j}} = \frac{4j}{2+2j} = \frac{2j}{1+j} = \frac{2j(1-j)}{2} = 1+j$$

$$\Rightarrow Z_{TH} = Z_1 - 3j = 1-2j$$

MAX POWER: $\boxed{Z_L = Z_{TH}^* = 1+2j}$

(2) OPTION 1:

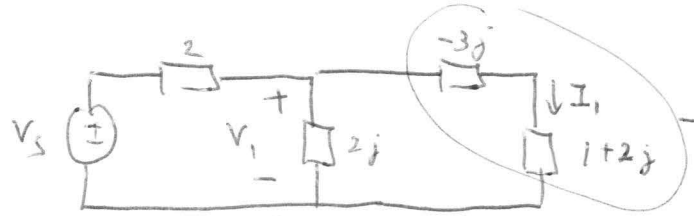

$\longrightarrow Z_2 = 1-j$

$$\hookrightarrow Z_3 = \frac{1}{\frac{1}{2j}+\frac{1}{1-j}} = \frac{2j(1-j)}{1-j+2j} = \frac{2j+2}{1+j} = 2$$

$$V_1 = V_S \frac{Z_3}{Z_3+2} = \frac{V_S}{2}$$

$$I_1 = \frac{V_1}{Z_2} \qquad \Rightarrow S_L = \frac{1}{2} Z_L \cdot |I_1|^2 = \frac{1}{2}(1+2j)\frac{|V_S|^2}{4}\cdot\frac{1}{|Z_2|^2}$$

$$= \frac{1}{2}\cdot\frac{64}{4}\cdot\frac{1}{2}(1+2j)$$

$$\boxed{S_L = 4+8j}$$

OPTION 2: FIND $V_{TH} \Rightarrow V_{OC} = V_S \cdot \frac{2j}{2+j} = V_S \cdot \frac{j}{1+j} = V_{TH}$

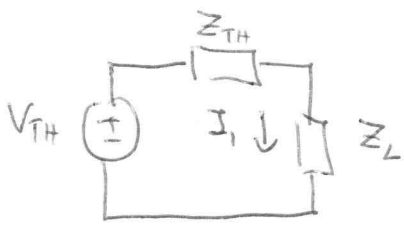

$$I_1 = \frac{V_{TH}}{Z_{TH}+Z_L} = \frac{V_{TH}}{(1-2j)+(1+2j)} = \frac{V_{TH}}{2}$$

AS EXPECTED

$$S_L = \frac{1}{2} Z_L |I_1|^2 = \frac{1}{2}(1+2j)\frac{|V_{TH}|^2}{4} = \frac{(1+2j)}{8}|V_S|^2\frac{|j|^2}{|1+j|^2}$$

$$S_L = (1+2j)\cdot\frac{64}{8}\cdot\frac{1}{2} \Rightarrow \boxed{S_L = 4+8j}$$

PP AC power 009

Unlimited Attempts.

Find the value of $\mathbf{Z_L} = a + jb$ that will receive the maximum amount of power

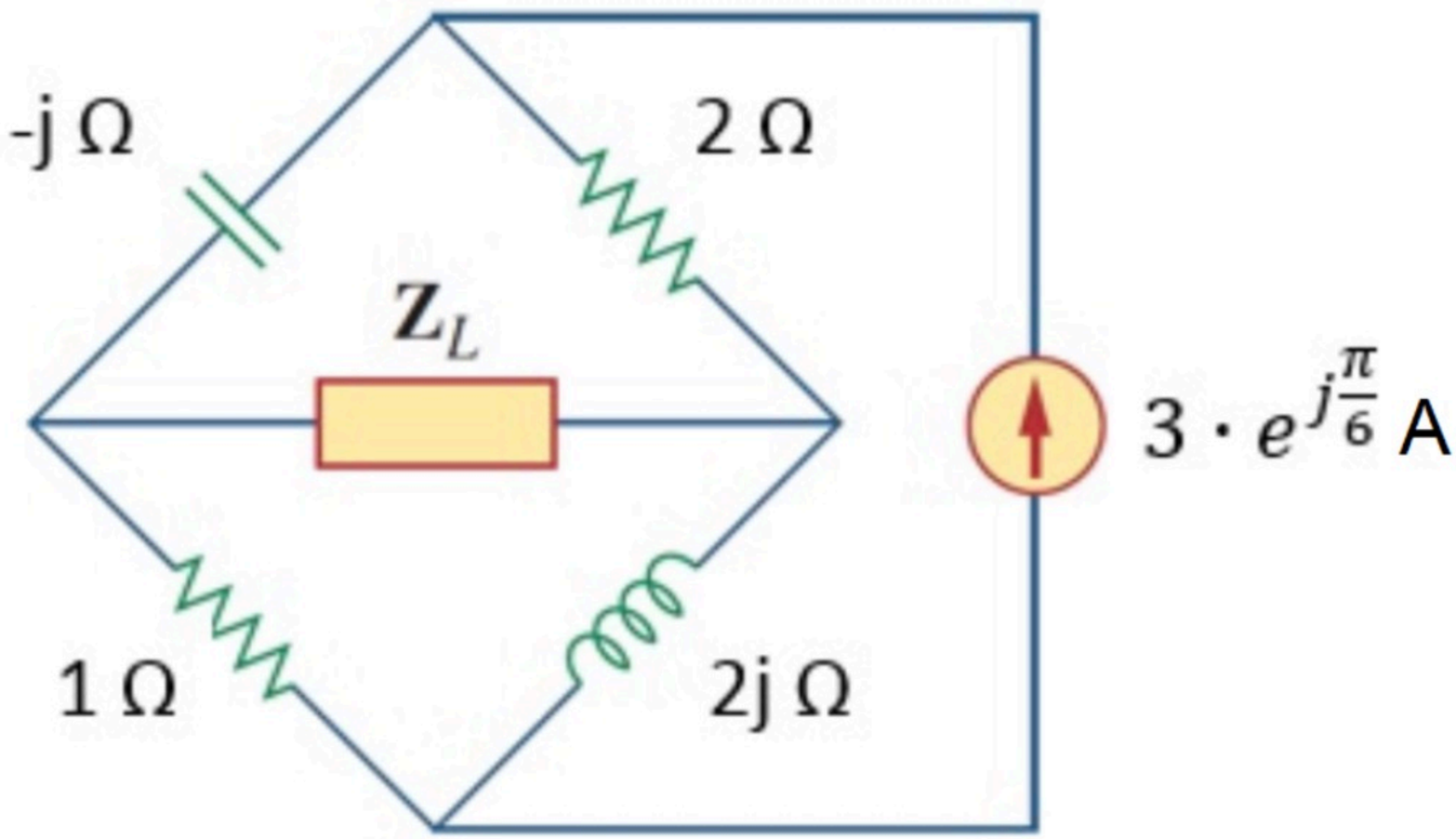

Given Variables:

. : . .

Calculate the following:

a (ohm) :

1.5 ✓

b (ohm) :

-0.5 ✓

Hint: Find ZTh by setting independent sources to zero.

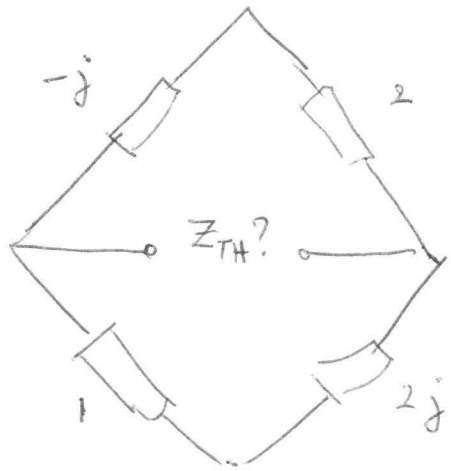

$$Z_{TH} = (2-j) \,//\, (1+2j) = \frac{1}{\frac{1}{2-j} + \frac{1}{1+2j}}$$

$$= \frac{(2-j)(1+2j)}{2-j+1+2j} = \frac{2-j+4j+2}{3+j} \cdot \frac{3-j}{3-j}$$

$$= \frac{1}{10} \cdot (4+3j)(3-j)$$

$$= \frac{1}{10}(12+9j-4j+3)$$

$$= 1.5 + 0.5j$$

$Z_L^* = Z_{TH}$ FOR MAX POWER

$$\boxed{Z_L = 1.5 - 0.5j}$$

PP AC power 010

Unlimited Attempts.

Find the value of $\mathbf{Z_L} = a + jb$ that will receive the maximum amount of power

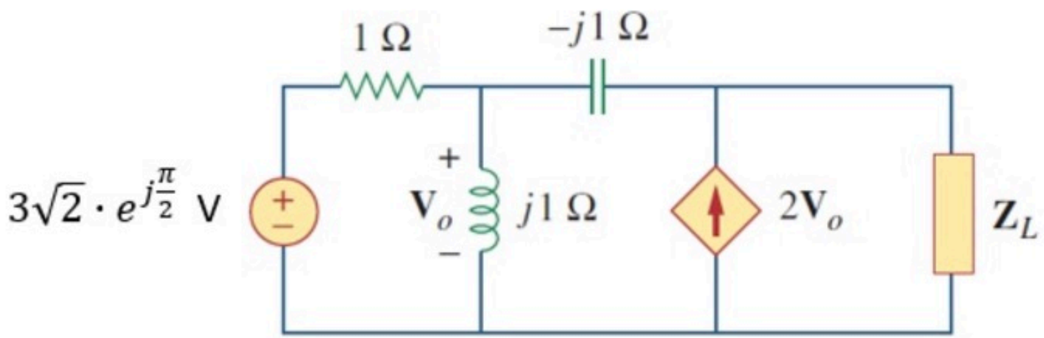

Given Variables:

. : . .

Calculate the following:

a (ohm) :

0.5 ✓

b (ohm) :

-0.5 ✓

Hint: Use a test source to find the ZTh.

FIND Z_{TH}:

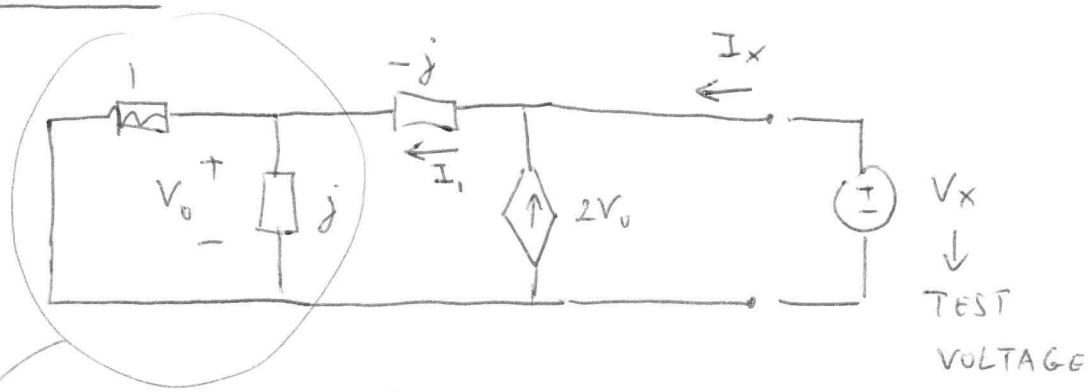

$$Z_1 = \frac{1}{\frac{1}{1} + \frac{1}{j}} = \frac{j}{1+j} = \frac{j(1-j)}{2} = \frac{1+j}{2}$$

$$I_1 = \frac{V_x}{Z_1 - j} = \frac{V_x}{\frac{1-j}{2}}$$

$$V_0 = V_x \cdot \frac{Z_1}{Z_1 - j} = V_x \frac{(1+j)}{(1-j)}$$

$$I_x = I_1 - 2V_0 = \frac{2V_x}{1-j} - 2V_x \frac{(1+j)}{1-j} = V_x \frac{(-2j)}{1-j}$$

$$Z_{TH} = \frac{V_x}{I_x} = \frac{V_x(1-j)}{V_x(-2j)} = \frac{1-j}{-2j} = \frac{(1-j)\cdot j}{2} = \frac{1+j}{2}$$

MAX POWER: $Z_L = Z_{TH}^*$

$$\boxed{Z_L = 0.5 - 0.5j}$$