ECE 65 – Components and Circuits Lab

Lab 7 Report – BJT Amplifiers

Feb 27, 2025

Andrew Onozuka, Riku Nagareda
PID:A16760043, A18555891
Professor: Saharnaz Baghdadchi

Table of Contents

Abstract ***3***

Experimental Procedures and Results **4**

Experiment 1: **4**

Prelab 1: **5**

Lab 1: **8**

Experiment 2: **9**

Prelab 2: **9**

Lab 2: **9**

Experiment 3: **11**

Prelab 3: **12**

Lab 3: **14**

Conclusion **15**

Abstract

The purpose of this lab is to analyze the behavior of BJT amplifiers, including common-emitter and emitter-follower configurations, by measuring their DC bias points, voltage gain, phase shift, and signal distortion.

We performed circuit simulations, theoretical calculations, and experimental measurements for three amplifier configurations: (1) a common-emitter amplifier without an emitter resistor, (2) a common-emitter amplifier with an emitter resistor, and (3) an emitter follower. We examined voltage gain, phase relationships, and clipping effects by varying input signals and observing the resulting output waveforms.

We concluded that a common-emitter amplifier provides significant voltage gain but introduces phase inversion and distortion at higher input amplitudes due to clipping. Removing the bypass capacitor in the common-emitter amplifier reduced gain but improved linearity. The emitter follower exhibited a voltage gain close to 1, making it ideal for buffering applications due to its high input impedance and low output impedance. These results align with theoretical expectations and circuit simulations.

Experimental Procedures and Results

Experiment 1: Common Emitter with no Emitter Resistance

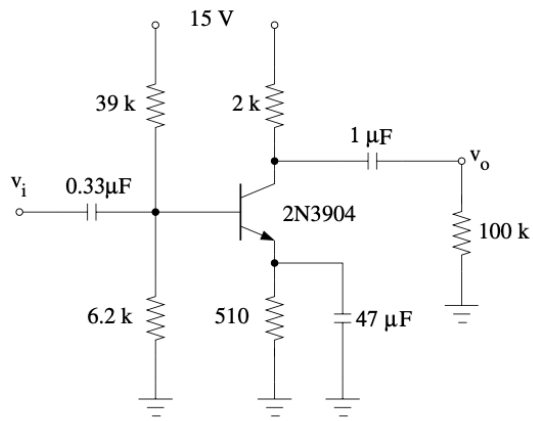

<u>Prelab:</u>

Circuit Analysis

Analytically calculate the Q point (Bias point) parameters. (assume $\beta = 150$, $V_A = 100$ V, $V_T = 25mV$).

Base Voltage Calculation
Using the voltage divider equation:

$$V_B = V_{CC} \times \frac{R_2}{R_1 + R_2}$$

Substituting values:

$$V_B = 15V \times \frac{6.2k\Omega}{39k\Omega + 6.2k\Omega} = 15V \times \frac{6.2}{45.2} = 2.06V$$

Emitter Voltage Calculation
The emitter voltage is:

$$V_E = V_B - V_{BE}$$

Assuming $V_{BE} \approx 0.7V$:

$$V_E = 2.06V - 0.7V = 1.36V$$

Collector Voltage Calculation
First, calculate the emitter current:

$$I_E = \frac{V_E}{R'_E}$$

Substituting values:

$$I_E = \frac{1.36V}{510\Omega} = 2.67mA$$

Approximating $I_C \approx I_E$:

$$V_C = V_{CC} - I_C R_C$$

Substituting values:

$$V_C = 15V - (2.67mA \times 2k\Omega) = 15V - 5.34V = 9.66V$$

Collector-Emitter Voltage Calculation

$$V_{CE} = V_C - V_E$$

Substituting values:

$$V_{CE} = 9.66V - 1.36V = 8.3V$$

Q-Point Summary
The transistor's Q-point is:

- Collector Current: $I_C \approx 2.67mA$
- Base Voltage: $V_B = 2.06V$
- Emitter Voltage: $V_E = 1.36V$
- Collector Voltage: $V_C = 9.66V$
- Collector-Emitter Voltage: $V_{CE} = 8.3V$

Simulation

(a) Simulate the circuit with PSpice/LTspice (bias point details) and compare bias point values with your analysis.

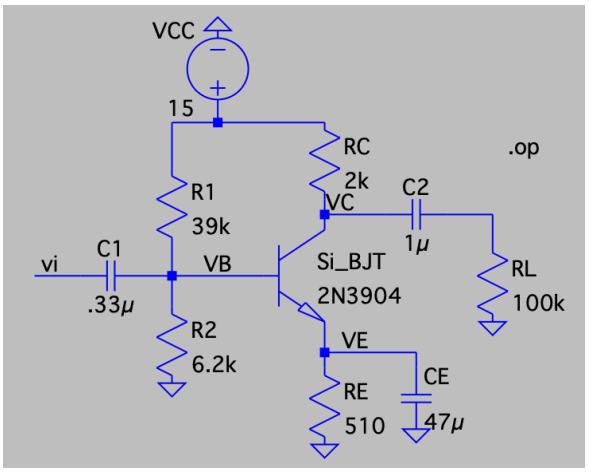


```
Operating Bias Point Solution:
V(vb)                    2.01407   voltage
V(vc)                    9.77906   voltage
V(ve)                    1.33548   voltage
V(n001)                       15   voltage
V(vi)                 6.64641e-07  voltage
V(n002)               9.77906e-13  voltage
Ic(Si_bjt)             0.00261047  device_current
Ib(Si_bjt)            8.12347e-06  device_current
Ie(Si_bjt)            -0.00261859  device_current
I(C1)                 6.64641e-19  device_current
I(C2)                -9.77906e-18  device_current
I(Ce)                 6.27676e-17  device_current
I(R2)                 0.000324849  device_current
I(R1)                 0.000332973  device_current
I(Rc)                  0.00261047  device_current
I(Rl)                 9.77906e-18  device_current
I(Re)                  0.00261859  device_current
I(Vcc)                -0.00294344  device_current
```

This is roughly consistent with what we expected in our calculations.

(b) Input a sinusoidal wave with a frequency of 2 kHz and amplitude of 0.01V. Graph the input and output signals for two periods (is there a phase shift?) Using your graph, calculate the amplifier voltage gain.

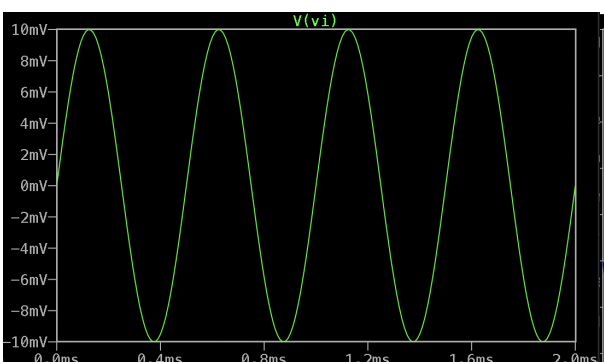

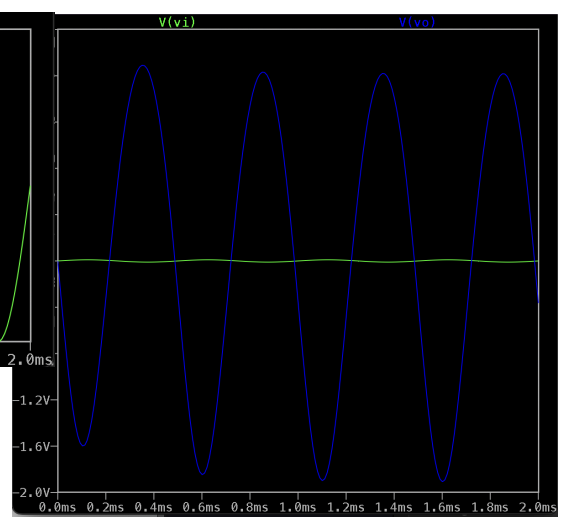

amplifier voltage gain around -1630

(c) Increase the input signal amplitude in 0.01V increments and observe the output signal shape. At some value, the output signal departs from a sinusoidal wave. Report the input voltage at which this happens. Explain the results.

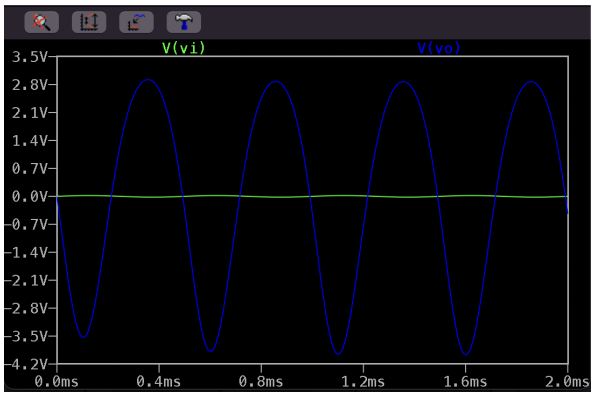

0.02V

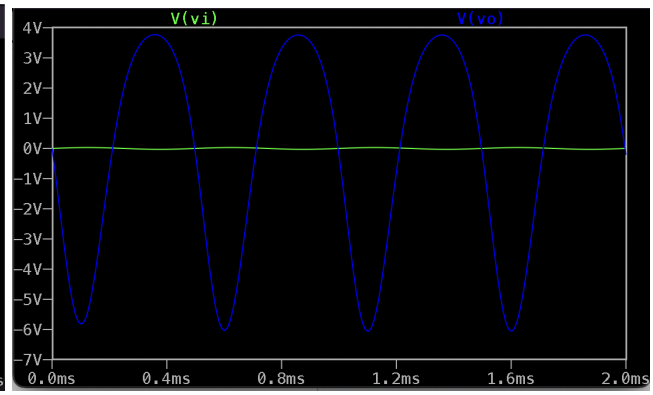

0.03V

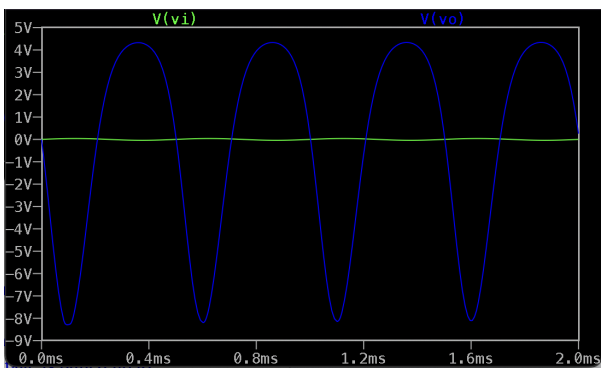

0.05V

The change starts around 0.02V but becomes more visible 0.03V and beyond. The output signal departs from a sinusoidal wave due to clipping, which occurs when the transistor reaches its saturation or cutoff limits. In saturation, the transistor is fully on, causing the output voltage to flatten at a low value. In cutoff, the transistor is fully off, and the output voltage is pulled up to V_{CC} , flattening the waveform at the top. This happens because the amplifier has a limited dynamic range, and when the input signal is too large, the transistor can no longer operate in its linear region, leading to distortion of the output.

Lab Exercise:

(a) Set up the circuit and measure bias voltages and currents and compare with analytical/simulation results. Explain your observations.

Base Voltage = 1.966 V

Emitter Voltage = 1.282 V

Collector Voltage = 9.999 V

Collector Current 2.5 mA

These are consistent with our calculations and our pre-lab simulation results.

(b) Set the function generator to produce a sinusoidal wave with a frequency of 2 kHz and amplitude of 0.02 V. Print the input and output signals for two periods (is there a phase shift?), calculate the amplifier voltage gain and compare with simulation results.

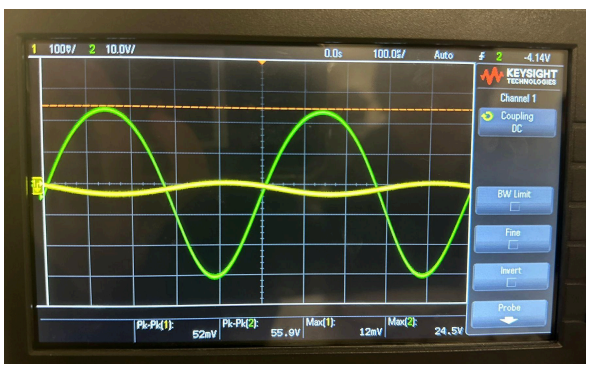

There is a phase shift, as the peaks are flipped. The amplifier voltage gain is around -2041 (negative for phase shift).

(c) Increase the input signal amplitude and observe the output signal shape. At some value, the output signal departs from a sinusoidal wave. Report the output voltage that this happens. Explain the results.

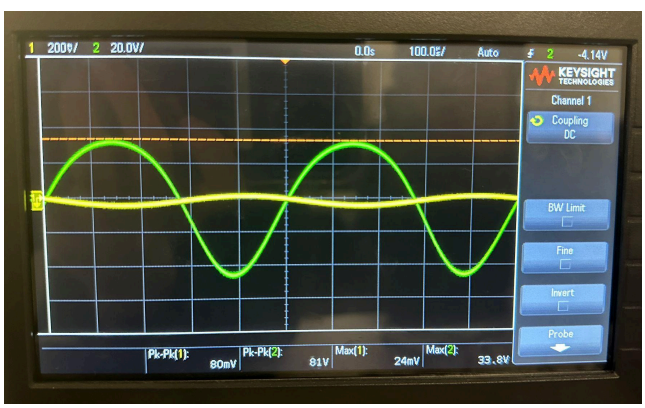

The signal departs from a sinusoidal wave starting from 0.03 V. We can see that the bottom of the output wave starts to look more like a triangular wave than a sinusoidal wave. This is due to clipping, occurring when the transistor reaches its saturation or cutoff limits. In saturation, the transistor is fully on, causing the output voltage to flatten at a low value. In cutoff, the transistor is fully off, and the output voltage is pulled up to VCC , flattening the waveform at the top. This happens because the amplifier has a limited dynamic range, and when the input signal is too large, the transistor can no longer operate in its linear region, leading to distortion of the output.

Experiment 2: Common Emitter with Emitter Resistor

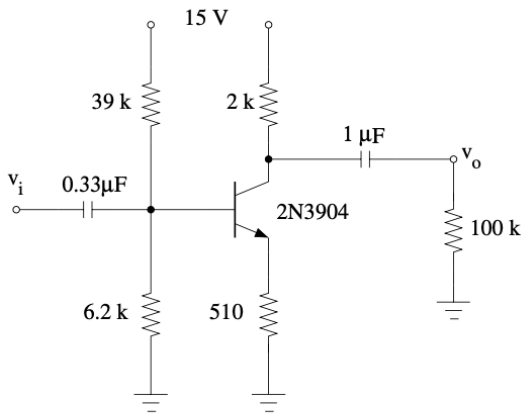

Note that this circuit is exactly the same as that of Experiment 1, with the exception that the R_E by-pass capacitor is removed.

Repeat all parts of Experiment 1. (Bias calculations and measurements are the same, and you do not need to repeat them.)

For part (c), you can increase your increments.

(b) Set the function generator to produce a sinusoidal wave with a frequency of 2 kHz and amplitude of 0.02 V. Print the input and output signals for two periods (is there a phase shift?), calculate the amplifier voltage gain and compare with simulation results.

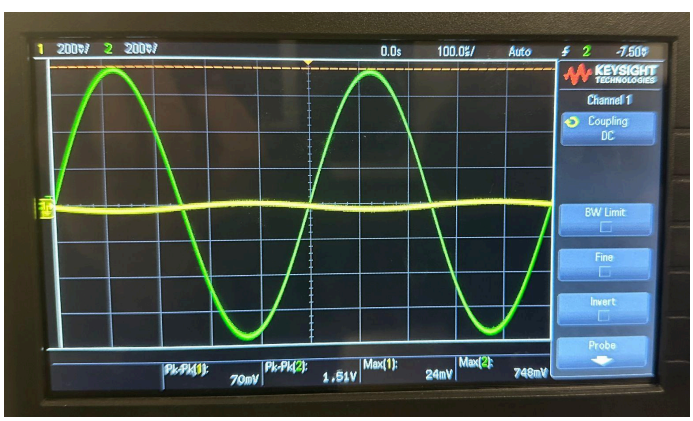

There is a phase shift, as the peaks are flipped. The amplifier voltage gain is around -31.25 (negative for phase shift).

(c) Increase the input signal amplitude and observe the output signal shape. At some value, the output signal departs from a sinusoidal wave. Report the output voltage that this happens. Explain the results.

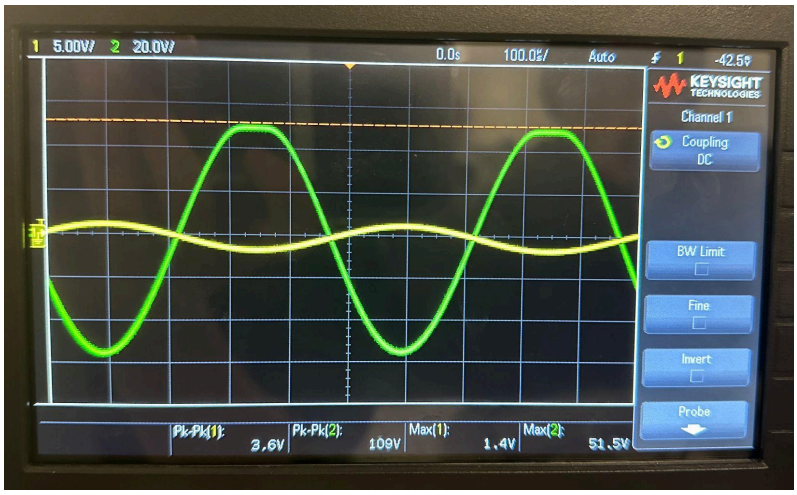

We needed to scale the input voltage to Amplitude 3 Vpp, and our gain went down to around -36.79. By removing our bypass capacitor in part 1, the amplifier gain was reduced because the AC impedance seen at the emitter increases. This is why we need a much larger input signal to produce the same output voltages as before. Additionally, the amplifier becomes more linear, reducing distortion, and the input impedance increases, making it easier to drive from previous stages. This trade-off improves signal fidelity but sacrifices amplification strength.

Experiment 3: Emitter Follower

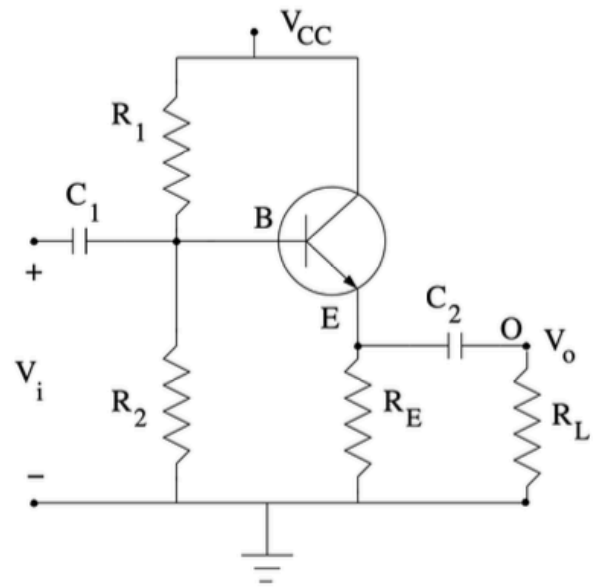

Use $R_1 = 47\ k\Omega$, $R_2 = 39\ k\Omega$, $R_E = 1.5\ k\Omega$, $C_1 = C_2 = 100\ nF$, $VCC = 15V$, and a 100 $k\Omega$ resistor as R_L for this experiment.

<u>Prelab:</u>

Circuit Analysis

Analytically calculate the Q point parameters. (assume $\beta = 150$, $V_A = 100$ V, $V_T = 25mV$).

Base Voltage Calculation
Using the voltage divider equation:

$$V_B = V_{CC} \times \frac{R_2}{R_1 + R_2}$$

Substituting values:

$$V_B = 15V \times \frac{39k\Omega}{47k\Omega + 39k\Omega} = 15V \times \frac{39}{86} = 6.8V$$

Emitter Voltage Calculation
The emitter voltage is:

$$V_E = V_B - V_{BE}$$

Assuming $V_{BE} \approx 0.7V$:

$$V_E = 6.8V - 0.7V = 6.1V$$

Emitter Current Calculation
Applying Ohm's law:

$$I_E = \frac{V_E}{R_E}$$

Substituting values:

$$I_E = \frac{6.1V}{1.5k\Omega} = 4.07mA$$

Collector Voltage Calculation
Since this is an emitter follower, the collector voltage is approximately equal to the supply voltage:

$$V_C \approx V_{CC} = 15V$$

Q-Point Summary
The transistor's Q-point is:

- Collector Current: $I_C \approx 4.07mA$
- Base Voltage: $V_B = 6.8V$
- Emitter Voltage: $V_E = 6.1V$
- Collector Voltage: $V_C = 15V$

Simulation

(a) Simulate the circuit with PSpice/LTspice (bias point details) and compare bias point values with your analytical results. (Use the same BJT as in Exp. 1,2)

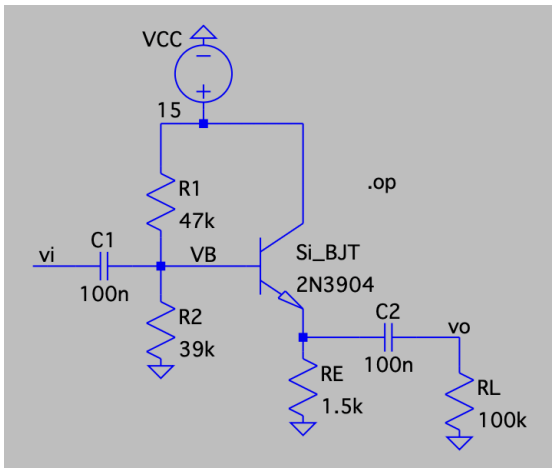


```
Operating Bias Point Solution:
V(vb)                    6.54508   voltage
V(n001)                       15   voltage
V(n002)                  5.85605   voltage
V(vi)                 6.54508e-07  voltage
V(vo)                 5.85605e-14  voltage
Ic(Si_bjt)             0.00389196  device_current
Ib(Si_bjt)            1.20691e-05  device_current
Ie(Si_bjt)            -0.00390403  device_current
I(C1)                 6.54508e-19  device_current
I(C2)                -5.85605e-19  device_current
I(R2)                 0.000167823  device_current
I(R1)                 0.000179892  device_current
I(Rl)                 5.85605e-19  device_current
I(Re)                  0.00390403  device_current
I(Vcc)                -0.00407186  device_current

Total elapsed time: 0.022 seconds.
```

(b) Input a sinusoidal wave with a frequency of 2 kHz and amplitude of 3 V. Save the plots of the input and output signals. Find the amplifier gain.

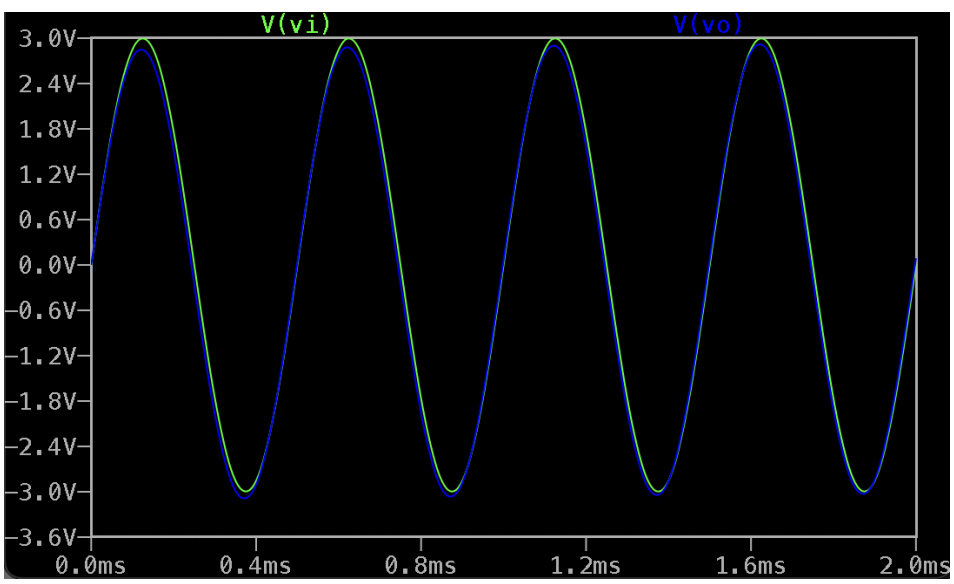

amplifier gain is around but a little under 1, as we can see that vo is slightly smaller than vi.

Lab Exercise:

(a) Set up the circuit and measure bias voltages and currents and compare with analytical/simulation results. Explain your observations.

Base Voltage = 6.248 V
Emitter Voltage = 5.655 V
Collector Voltage = 14.977 V
Collector Current = 3.769 mA

These are consistent with our calculations and our pre-lab simulation results.

(b) Attach the function generator to the input. Set it to produce a sinusoidal wave with a frequency of 2 kHz and amplitude of 3 V. Save a copy of the input and output signals. Find the amplifier gain and compare it with circuit simulation results.

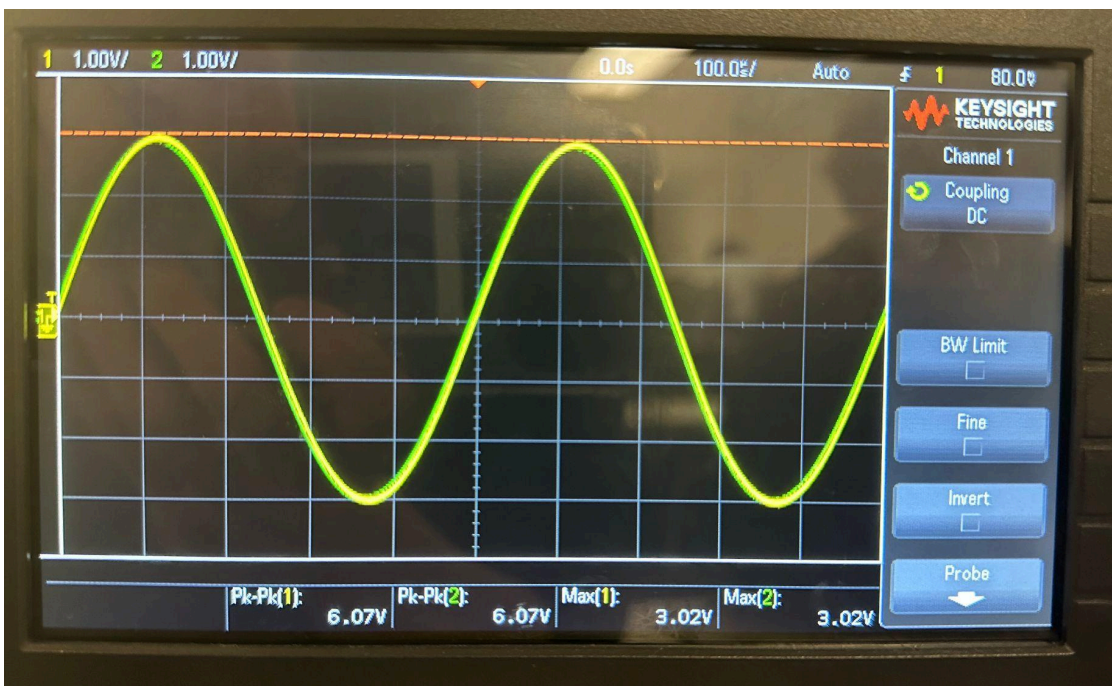

The output waveform is consistent with what we expected in the prelab simulation. The gain is around/just under 1.

Conclusion

In this lab, we investigated the behavior of BJT amplifiers, focusing on common-emitter and emitter-follower configurations, analyzing their performance through both simulations and experimental measurements. By varying input signals and observing output behavior, we examined voltage gain, phase shift, and signal distortion to understand how circuit parameters impact amplifier functionality.

For the common-emitter amplifier, we confirmed that it provides high voltage gain but introduces phase inversion and can experience clipping distortion when the input amplitude becomes too large. Removing the bypass capacitor in the common-emitter circuit significantly reduced the gain but improved the amplifier's linearity, requiring a much larger input voltage to achieve the same output level. In the emitter follower configuration, we demonstrated that the amplifier provides a voltage gain close to 1, making it ideal for buffering applications due to its high input impedance and low output impedance.

Overall, this lab demonstrated the trade-offs in amplifier design, highlighting the impact of circuit topology on gain, distortion, and impedance characteristics. While simulations closely matched theoretical expectations, experimental measurements emphasized the importance of biasing, component tolerances, and real-world nonlinearities in practical circuit design.