ECE 65 – Components and Circuits Lab

Lab 7 Report – BJT Amplifiers

Feb 27, 2025

Andrew Onozuka, Riku Nagareda
PID:A16760043, A18555891
Professor: Saharnaz Baghdadchi

Table of Contents

Abstract ***3***

Experimental Procedures and Results **4**

Experiment 1: **4**

Prelab 1: **5**

Lab 1: **9**

Experiment 2: **11**

Prelab 2: **11**

Lab 2: **14**

Experiment 3: **16**

Prelab 3: **16**

Lab 3: **19**

Conclusion **21**

Abstract

The purpose of this lab is to ____.

We performed ____.

We concluded that ____.

Experimental Procedures and Results

Experiment 1: Common Emitter with no Emitter Resistance

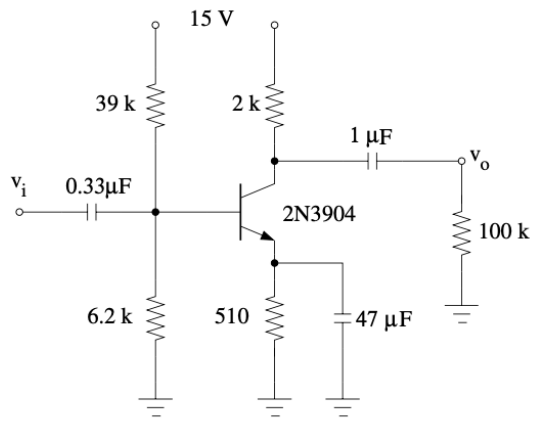

<u>Prelab:</u>

Circuit Analysis

Analytically calculate the Q point (Bias point) parameters. (assume $\beta = 150$, $V_A = 100$ V, $V_T = 25mV$).

Base Voltage Calculation
Using the voltage divider equation:

$$V_B = V_{CC} \times \frac{R_2}{R_1 + R_2}$$

Substituting values:

$$V_B = 15V \times \frac{6.2k\Omega}{39k\Omega + 6.2k\Omega} = 15V \times \frac{6.2}{45.2} = 2.06V$$

Emitter Voltage Calculation
The emitter voltage is:

$$V_E = V_B - V_{BE}$$

Assuming $V_{BE} \approx 0.7V$:

$$V_E = 2.06V - 0.7V = 1.36V$$

Collector Voltage Calculation
First, calculate the emitter current:

$$I_E = \frac{V_E}{R'_E}$$

Substituting values:

$$I_E = \frac{1.36V}{510\Omega} = 2.67mA$$

Approximating $I_C \approx I_E$:

$$V_C = V_{CC} - I_C R_C$$

Substituting values:

$$V_C = 15V - (2.67mA \times 2k\Omega) = 15V - 5.34V = 9.66V$$

Collector-Emitter Voltage Calculation

$$V_{CE} = V_C - V_E$$

Substituting values:

$$V_{CE} = 9.66V - 1.36V = 8.3V$$

Q-Point Summary
The transistor's Q-point is:

- Collector Current: $I_C \approx 2.67mA$
- Base Voltage: $V_B = 2.06V$
- Emitter Voltage: $V_E = 1.36V$
- Collector Voltage: $V_C = 9.66V$
- Collector-Emitter Voltage: $V_{CE} = 8.3V$

Simulation

(a) Simulate the circuit with PSpice/LTspice (bias point details) and compare bias point values with your analysis.

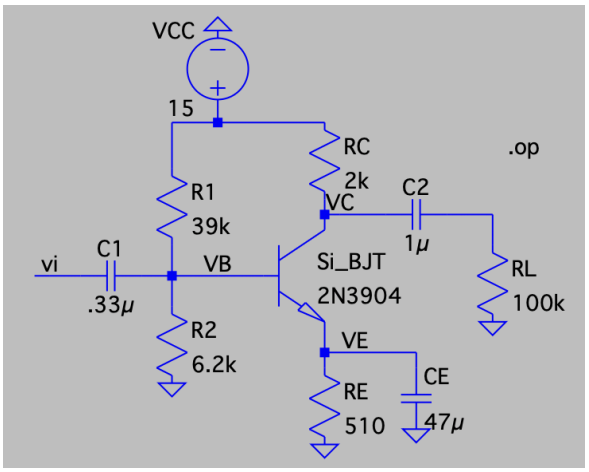


```
Operating Bias Point Solution:
V(vb)                    2.01407   voltage
V(vc)                    9.77906   voltage
V(ve)                    1.33548   voltage
V(n001)                       15   voltage
V(vi)                 6.64641e-07  voltage
V(n002)               9.77906e-13  voltage
Ic(Si_bjt)             0.00261047  device_current
Ib(Si_bjt)            8.12347e-06  device_current
Ie(Si_bjt)            -0.00261859  device_current
I(C1)                 6.64641e-19  device_current
I(C2)                -9.77906e-18  device_current
I(Ce)                 6.27676e-17  device_current
I(R2)                 0.000324849  device_current
I(R1)                 0.000332973  device_current
I(Rc)                  0.00261047  device_current
I(Rl)                 9.77906e-18  device_current
I(Re)                  0.00261859  device_current
I(Vcc)                -0.00294344  device_current
```

This is roughly consistent with what we expected in our calculations.

(b) Input a sinusoidal wave with a frequency of 2 kHz and amplitude of 0.01V. Graph the input and output signals for two periods (is there a phase shift?) Using your graph, calculate the amplifier voltage gain.

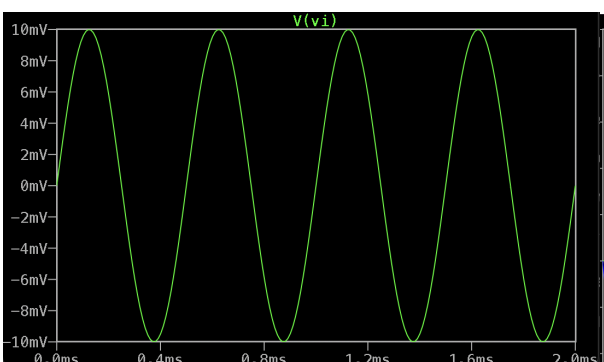

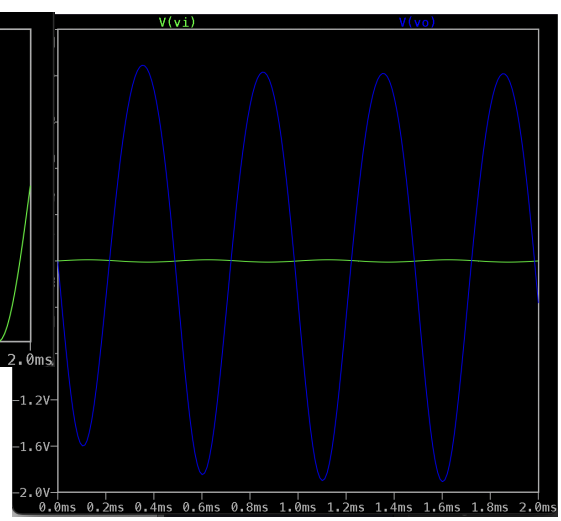

amplifier voltage gain around -163

(c) Increase the input signal amplitude in 0.01V increments and observe the output signal shape. At some value, the output signal departs from a sinusoidal wave. Report the input voltage at which this happens. Explain the results.

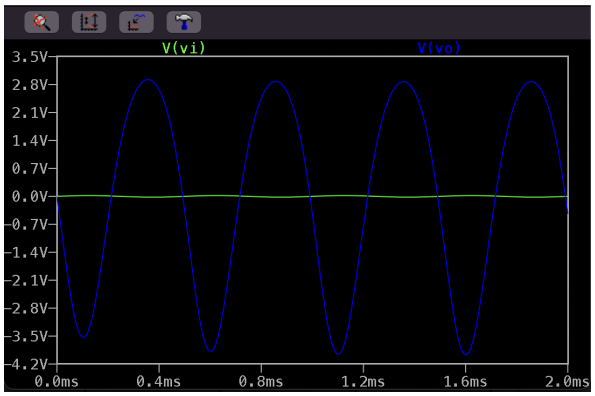

0.02V

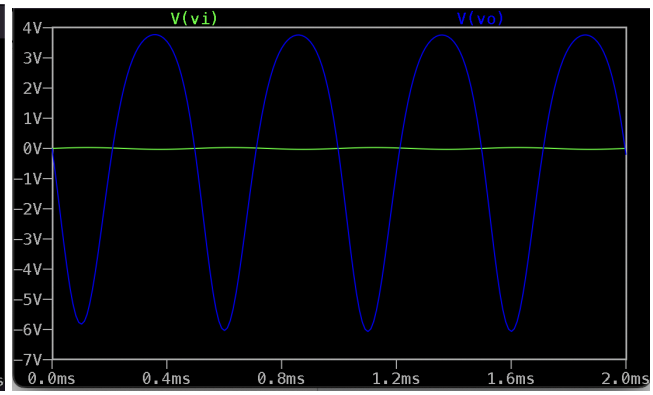

0.03V

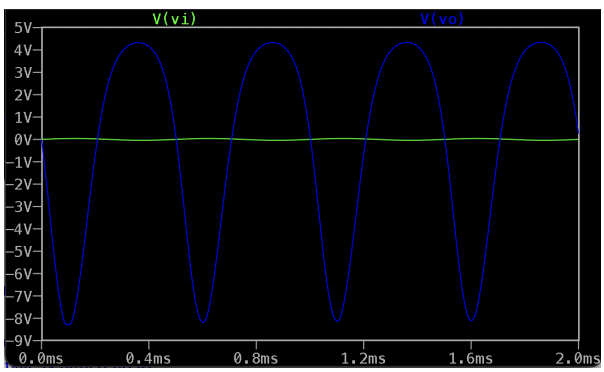

0.05V

The change starts around 0.02V but becomes more visible 0.03V and beyond. The output signal departs from a sinusoidal wave due to clipping, which occurs when the transistor reaches its saturation or cutoff limits. In saturation, the transistor is fully on, causing the output voltage to flatten at a low value. In cutoff, the transistor is fully off, and the output voltage is pulled up to V_{CC} , flattening the waveform at the top. This happens because the amplifier has a limited dynamic range, and when the input signal is too large, the transistor can no longer operate in its linear region, leading to distortion of the output.

Lab Exercise:

(a) Set up the circuit and measure bias voltages and currents and compare with analytical/simulation results. Explain your observations.

h

(b) Set the function generator to produce a sinusoidal wave with a frequency of 2 kHz and amplitude of 0.02 V. Print the input and output signals for two periods (is there a phase shift?), calculate the amplifier voltage gain and compare with simulation results.

h

(c) Increase the input signal amplitude and observe the output signal shape. At some value, the output signal departs from a sinusoidal wave. Report the output voltage that this happens. Explain the results.

h

Experiment 2: Common Emitter with Emitter Resistor

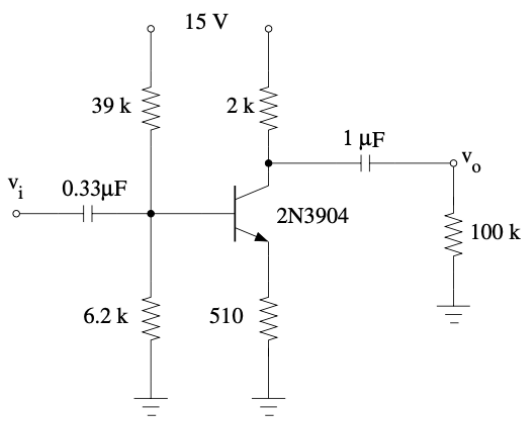

Note that this circuit is exactly the same as that of Experiment 1, with the exception that the R_E by-pass capacitor is removed.

Repeat all parts of Experiment 1. (Bias calculations and measurements are the same, and you do not need to repeat them.)

For part (c), you can increase your increments.

h

Experiment 3: Emitter Follower

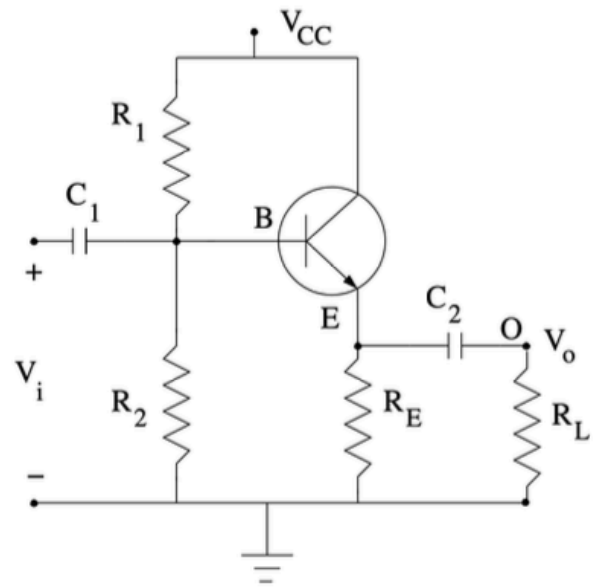

Use $R_1 = 47\ k\Omega$, $R_2 = 39\ k\Omega$, $R_E = 1.5\ k\Omega$, $C_1 = C_2 = 100\ nF$, $VCC = 15V$, and a 100 $k\Omega$ resistor as R_L for this experiment.

<u>Prelab:</u>

Circuit Analysis

Analytically calculate the Q point parameters. (assume $\beta = 150$, $V_A = 100$ V, $V_T = 25mV$).

Base Voltage Calculation
Using the voltage divider equation:

$$V_B = V_{CC} \times \frac{R_2}{R_1 + R_2}$$

Substituting values:

$$V_B = 15V \times \frac{39k\Omega}{47k\Omega + 39k\Omega} = 15V \times \frac{39}{86} = 6.8V$$

Emitter Voltage Calculation
The emitter voltage is:

$$V_E = V_B - V_{BE}$$

Assuming $V_{BE} \approx 0.7V$:

$$V_E = 6.8V - 0.7V = 6.1V$$

Emitter Current Calculation
Applying Ohm's law:

$$I_E = \frac{V_E}{R_E}$$

Substituting values:

$$I_E = \frac{6.1V}{1.5k\Omega} = 4.07mA$$

Collector Voltage Calculation
Since this is an emitter follower, the collector voltage is approximately equal to the supply voltage:

$$V_C \approx V_{CC} = 15V$$

Q-Point Summary
The transistor's Q-point is:

- Collector Current: $I_C \approx 4.07mA$
- Base Voltage: $V_B = 6.8V$
- Emitter Voltage: $V_E = 6.1V$
- Collector Voltage: $V_C = 15V$

Simulation

(a) Simulate the circuit with PSpice/LTspice (bias point details) and compare bias point values with your analytical results. (Use the same BJT as in Exp. 1,2)

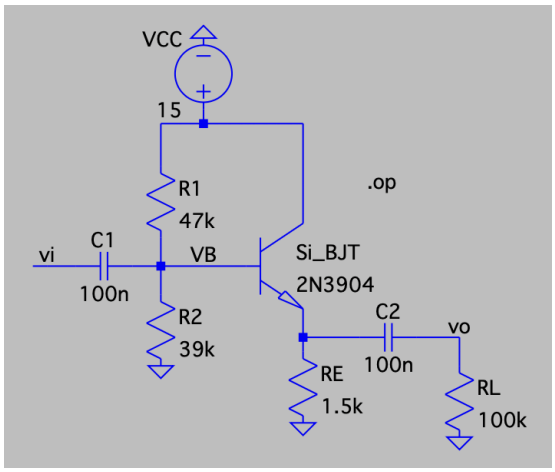


```
Operating Bias Point Solution:
V(vb)                    6.54508   voltage
V(n001)                       15   voltage
V(n002)                  5.85605   voltage
V(vi)                 6.54508e-07  voltage
V(vo)                 5.85605e-14  voltage
Ic(Si_bjt)             0.00389196  device_current
Ib(Si_bjt)            1.20691e-05  device_current
Ie(Si_bjt)            -0.00390403  device_current
I(C1)                 6.54508e-19  device_current
I(C2)                -5.85605e-19  device_current
I(R2)                 0.000167823  device_current
I(R1)                 0.000179892  device_current
I(Rl)                 5.85605e-19  device_current
I(Re)                  0.00390403  device_current
I(Vcc)                -0.00407186  device_current

Total elapsed time: 0.022 seconds.
```

(b) Input a sinusoidal wave with a frequency of 2 kHz and amplitude of 3 V. Save the plots of the input and output signals. Find the amplifier gain.

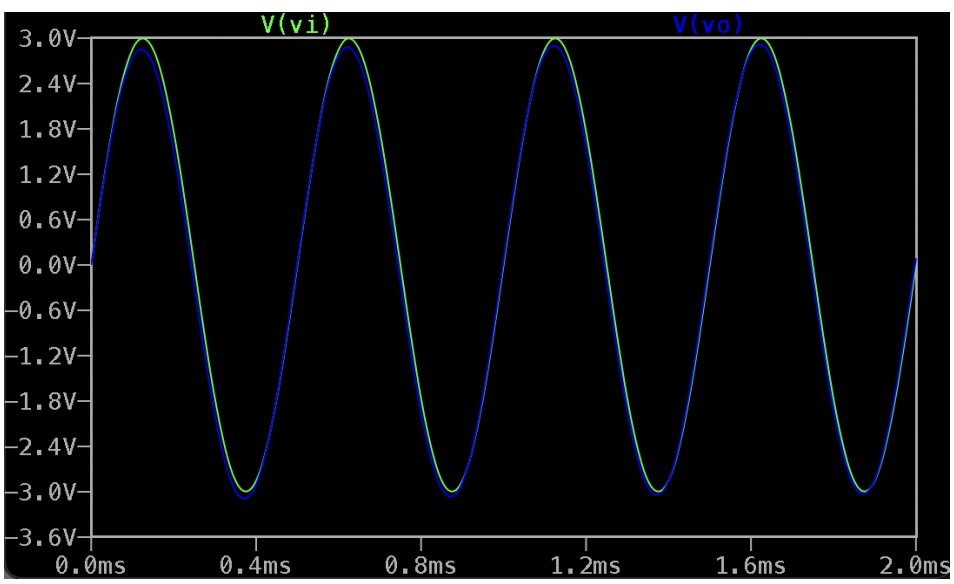

amplifier gain is around but a little under 1, as we can see that vo is slightly smaller than vi.

Lab Exercise:

(a) Set up the circuit and measure bias voltages and currents and compare with analytical/simulation results. Explain your observations.

h

(b) Attach the function generator to the input. Set it to produce a sinusoidal wave with a frequency of 2 kHz and amplitude of 3 V. Save a copy of the input and output signals. Find the amplifier gain and compare it with circuit simulation results.

h

Conclusion

conclusion here.