ECE 65 – Components and Circuits Lab

Lab 9 Report – MOSFET Amplifiers

Mar 13, 2025

Andrew Onozuka, Riku Nagareda
PID:A16760043, A18555891
Professor: Saharnaz Baghdadchi

Table of Contents

Abstract ***3***

Experimental Procedures and Results **4**

Experiment 1: **4**

Prelab 1: **5**

Lab 1: **8**

Experiment 2: **9**

Prelab 2: **10**

Lab 2: **13**

Conclusion **14**

Abstract

The purpose of this lab is to ____.

We performed ____.

We concluded that ____.

Experimental Procedures and Results

In this lab, we use 2N7000 NMOS for the experiments. Assume $V_t = 1.7V$, $k_n = 250mA/V^2$ and $\lambda = 0.01\ V^{-1}$ for the circuit analysis. Ignore the channel length modulation effect for the bias circuit. Use the 2N7000KL transistor model in the PSpice libraries for simulations. If you use LTspice for simulations, you can refer to the **Helpful Tips for LTspice** section of this document.

Experiment 1: Common Source with Source Degeneration and Bypass Capacitor

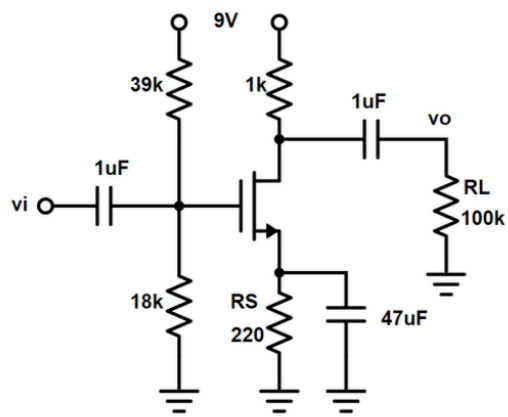

<u>Prelab:</u>

Circuit Analysis

Analytically calculate the Q point (Bias point) parameters, input and output resistances of the amplifier, and circuit voltage gain. Recalculate the circuit voltage gain with RL = 1 $k\Omega$.

Gate Voltage Calculation Using the voltage divider equation:

$$\begin{aligned} V_G &= V_{CC} \times \frac{R_{G2}}{R_{G1} + R_{G2}} \\ &= 9V \times \frac{18k\Omega}{39k\Omega + 18k\Omega} \\ &= 9V \times \frac{18}{57} \\ &= 2.84V \end{aligned}$$

Drain Current Calculation The MOSFET operates in saturation, so we use:

$$I_D = k_n(V_{GS} - V_T)^2$$

Since $V_{GS} = V_G - V_S$, we express V_S in terms of I_D:

$$V_S = I_D R_S$$

Substituting:

$$\begin{aligned} I_D &= 250mA/V^2 \times ((2.84V - V_S) - 1.7V)^2 \\ &= 250mA/V^2 \times (1.14V - V_S)^2 \end{aligned}$$

Since $V_S = I_D \times 220\Omega$:

$$I_D = 250 \times 10^{-3} \times (1.14 - 220I_D)^2$$

Expanding:

$$I_D = 250 \times 10^{-3} \times (1.2996 - 501.6I_D + 48400I_D^2)$$

Rearrange:

$$12.1I_D^2 - 125.4I_D + 0.3249 = 0$$

Using the quadratic formula:

$$I_D = \frac{125.4 \pm \sqrt{(-125.4)^2 - 4(12.1)(0.3249)}}{2(12.1)}$$

Solving:

$$I_D = 10.37mA$$

Source and Drain Voltages

$$V_S = I_D \times R_S = 10.37mA \times 220\Omega = 2.28V$$

$$\begin{aligned} V_D &= V_{CC} - I_D \times R_D = 9V - (10.37mA \times 1k\Omega) \\ &= 9V - 10.37V = -1.37V \end{aligned}$$

Final Q-Point Values

- $I_D = 10.37mA$
- $V_G = 2.84V$
- $V_S = 2.28V$
- $V_D = -1.37V$ (indicating linear operation instead of saturation)

Simulation

(a) Simulate the circuit and compare bias point values with your analysis.

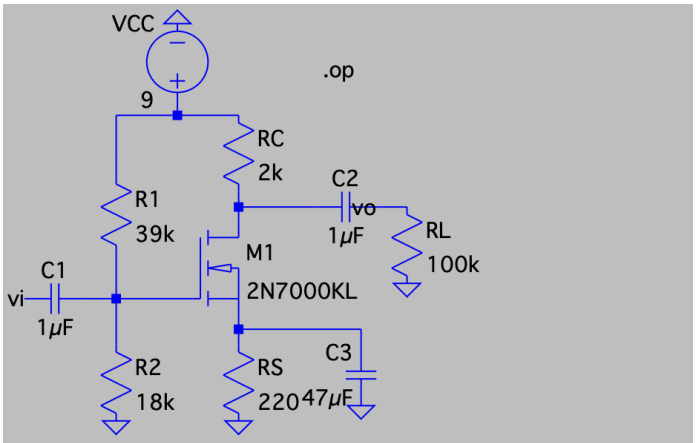


```
.lib /Users/ryoandrewonozuka/Documents/LTspice/2N7000KL.txt
WARNING: Node VI is floating.

WARNING: Less than two connections to node vi.  This node is used by c1.
Instance "m:m1:1": Length shorter than recommended for a level 3 MOSFET.
Direct Newton iteration for .op point succeeded.
Semiconductor Device Operating Points:
                          --- Diodes ---
Name:     d:m1:bd
Model:    m1:dbd
Id:      -8.93e-13
Vd:      -4.81e-02
Req:      1.43e+11
CAP:      1.25e-11

                          --- MOSFET Transistors ---
Name:         m:m1:1      m:m1:2
Model:        m1:nmos     m1:pmos
Id:           4.03e-03   -5.66e-14
Vgs:          1.95e+00    1.95e+00
Vds:          4.63e-02    0.00e+00
Vbs:          0.00e+00    4.81e-02
Vth:          1.87e+00   -2.61e+00
Vdsat:        1.30e-01   -0.00e+00
Gm:           2.33e-02    0.00e+00
Gds:          7.15e-02    0.00e+00
Gmb:          2.06e-02    0.00e+00
Cbd:          0.00e+00    0.00e+00
Cbs:          0.00e+00    0.00e+00
Cgsov:        0.00e+00    0.00e+00
Cgdov:        0.00e+00    0.00e+00
Cgbov:        0.00e+00    0.00e+00
Cgs:          3.64e-12    8.16e-12
Cgd:          2.71e-12    0.00e+00
Cgb:          0.00e+00    0.00e+00


Operating Bias Point Solution:
V(n001)                          9   voltage
V(n003)                    2.84211   voltage
V(n002)                    0.93527   voltage
V(n004)                    0.88712   voltage
V(vi)                   2.8421e-06   voltage
V(vo)                   9.3527e-14   voltage
I(C1)                   2.8421e-18   device_current
I(C2)                  -9.3527e-19   device_current
I(C3)                 -4.16947e-17   device_current
I(R1)                  0.000157895   device_current
I(Rc)                   0.00403237   device_current
I(Rs)                   0.00403237   device_current
I(R2)                  0.000157895   device_current
I(Rl)                   9.3527e-19   device_current
I(Vcc)                 -0.00419026   device_current
Ix(m1:4)                0.00403237   subckt_current
Ix(m1:1)               4.69196e-23   subckt_current
Ix(m1:2)               -0.00403237   subckt_current

Total elapsed time: 0.011 seconds.
```

Our simulated results show some differences from our expected values, but the overall behavior still makes sense. In our calculations, we predicted a drain current of 10.37mA, but LTspice gave us 4.03mA. Similarly, we expected the source voltage to be 2.28V, but the simulation showed 0.935V, and our expected drain voltage of -1.37V ended up being 0.887V in LTspice. These differences are likely because the simulation accounts for real MOSFET effects, like a slightly higher threshold voltage (V_T = 1.87V instead of 1.7V) and other factors like body effect and small variations in transistor characteristics. Even though our numbers don't match exactly, the circuit still works as expected, with the MOSFET operating in an amplifying region and the bypass capacitor helping to maintain high AC gain.

(b) Input a sinusoidal wave with a frequency of 5 kHz and amplitude of 10 mV. Graph the input and output signals for two periods (is there a phase shift?) Using your graph, calculate the circuit voltage gain, and compare it with the analytical results.

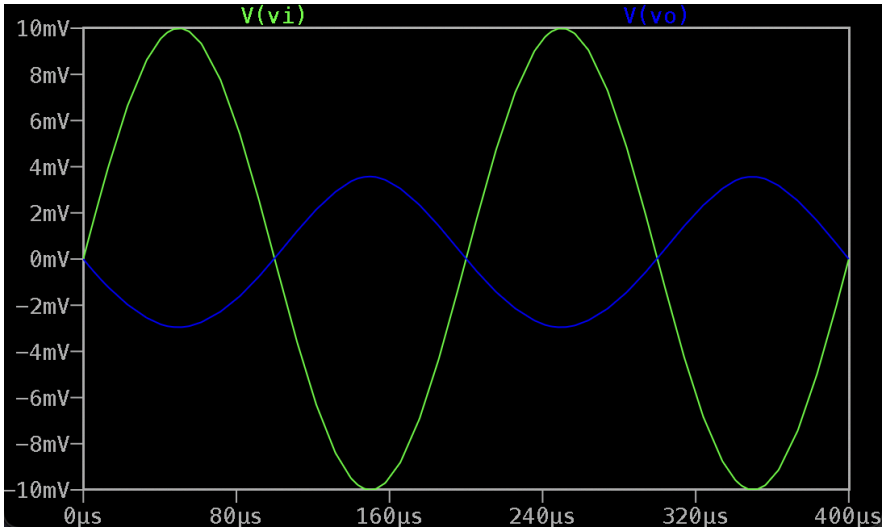

There is a phase shift. The voltage gain should be around 0.3.

(c) Increase the input signal amplitude in 5mV increments and observe the output signal shape. At some value, the output signal departs from a sinusoidal wave. Report the input voltage at which this happens. Explain the results.

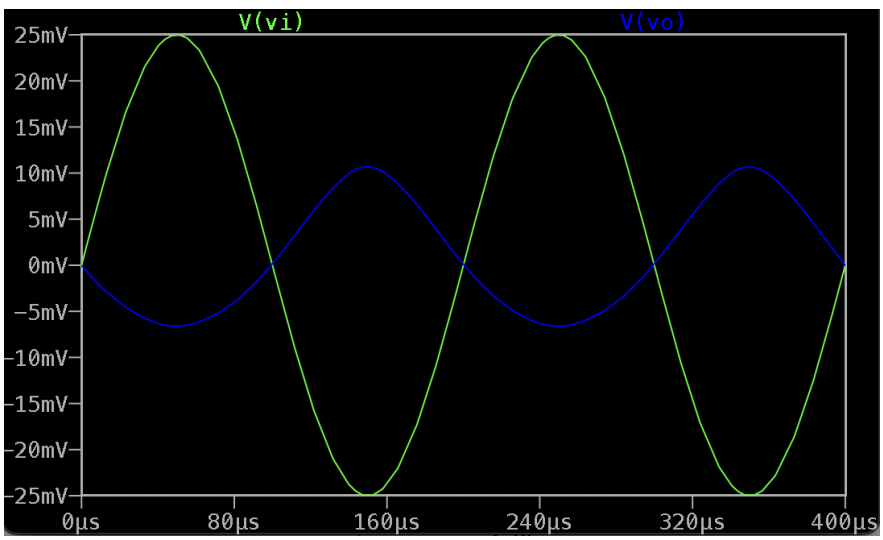

Around 20-25 mV, we can see the output signal depart from a sinusoidal wave. This occurs due to nonlinear distortion when the MOSFET enters a region when it can no longer operate linearly.

(d) Replace the 100 kΩ load resistance, RL, with a 1 kΩ one and repeat part b. Compare the result with part b. Explain your conclusions.

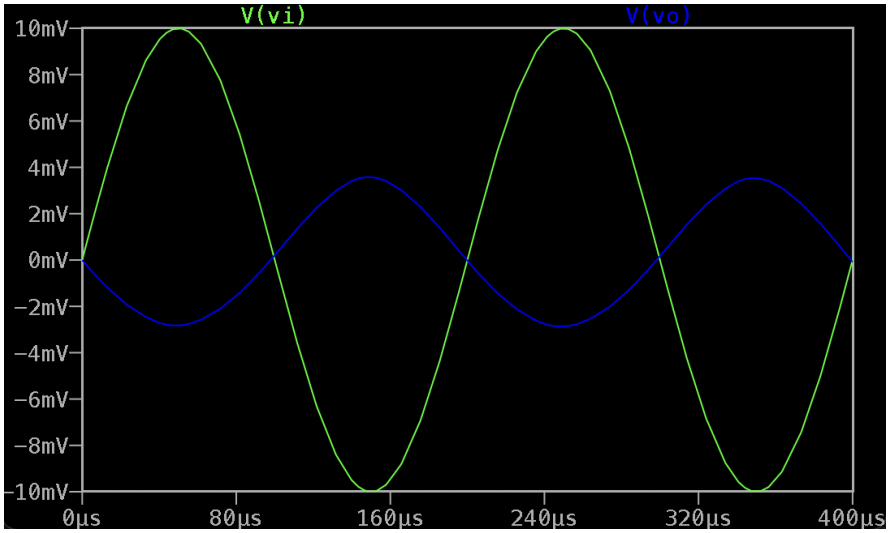

After replacing $R_L = 100k\Omega$ with $R_L = 1k\Omega$, the output waveform remained nearly the same. This suggests that the circuit's gain is not significantly affected by the load resistance. The likely reason is that the drain resistor $R_D = 1k\Omega$ is already comparable to R_L , meaning the total output resistance does not change drastically. Additionally, the MOSFET's internal output resistance may be much larger than both R_D and R_L , making the circuit less sensitive to loading effects. Since the amplifier already had a low gain ($A_v \approx 0.3$), further reducing R_L does not noticeably impact the output signal.

<u>Lab Exercise:</u>

(a) Set up the circuit and measure bias voltages and currents and compare with analytical/simulation results. Explain your observations.

(b) Set the function generator to produce a sinusoidal wave with a frequency of 5 kHz and amplitude of 0.01 V. Print the input and output signals for two periods (is there a phase shift?), calculate the circuit voltage gain and compare it with design/simulation results.

(c) Increase the input signal amplitude and observe the output signal shape. At some value, the output signal departs from a sinusoidal wave. Report the output voltage that this happens. Does it match your simulation?

(d) Replace the 100 kΩ load resistance, RL, with a 1 kΩ one and repeat part b. Compare the result with part b. Explain your observations.

Experiment 2: Common Source with Source Degeneration and no Bypass Capacitor

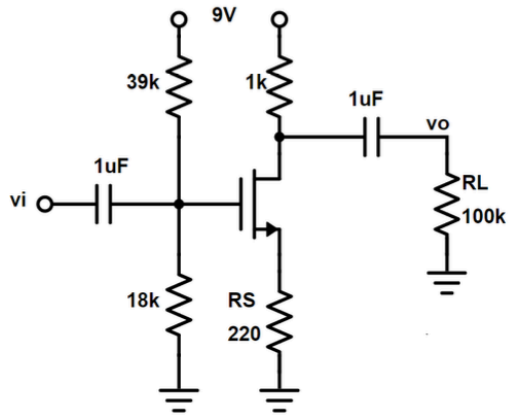

Note that this circuit is exactly the same as that of Experiment 2, with the exception that the bypass capacitor at the source is removed.

<u>Lab Exercise:</u>

Repeat parts (a) - (c) of Experiment 1. (Bias calculations and measurements are the same, and you do not need to repeat them.). For part (c), you can increase your increments.

Compare the results between experiments 1 and 2. Explain your conclusions.

text

Conclusion

text.