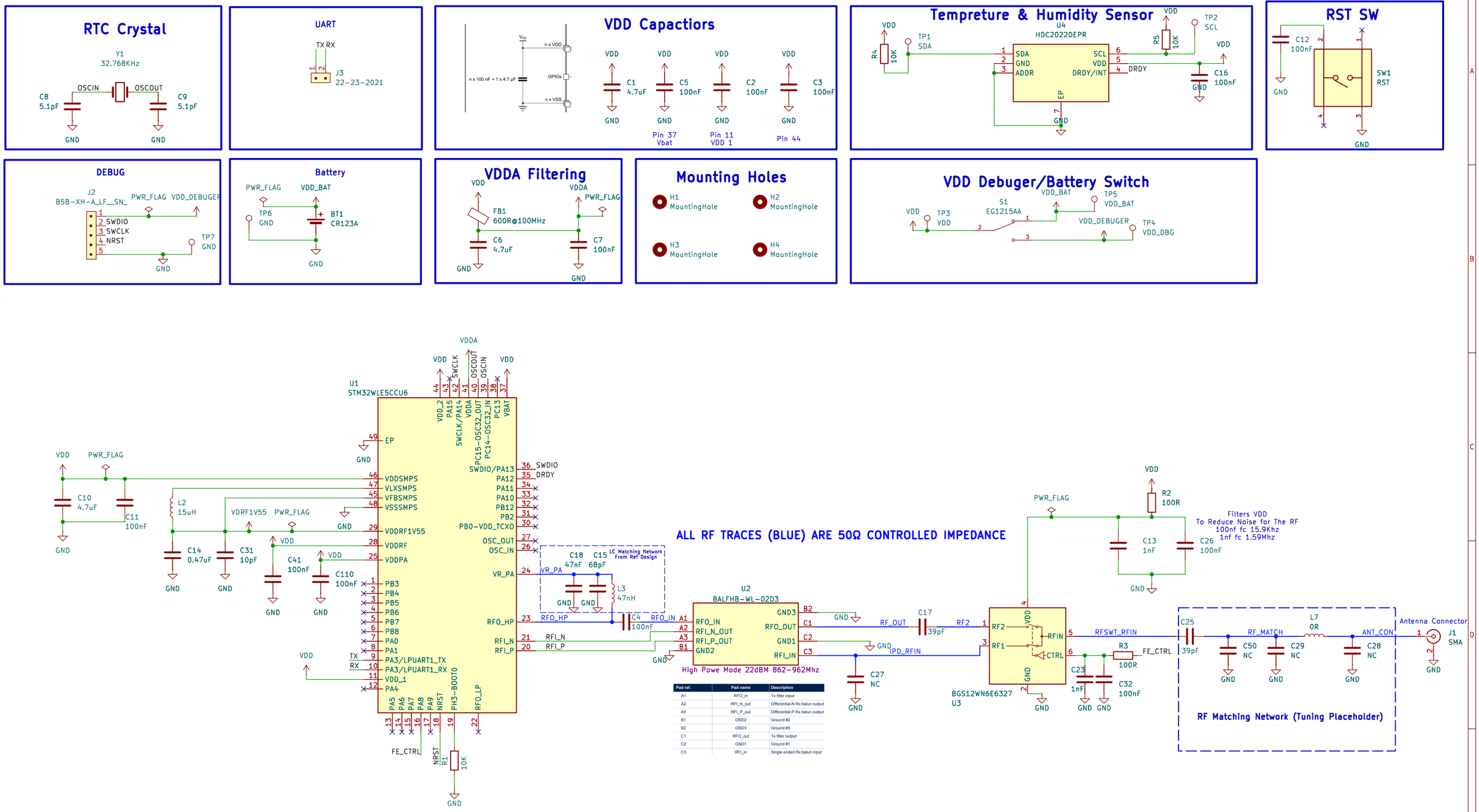

Pad ref.	Pad name	Description
A1	RFO_in	Tx filter input
A2	RFI_N_out	Differential-N Rx balun output
A3	RFI_P_out	Differential-P Rx balun output
B1	GND2	Ground #2
B2	GND3	Ground #3
C1	RFO_out	Tx filter output
C2	GND1	Ground #1
C3	RFI_in	Single ended Rx balun input

Andrey Podlesni

Sheet: /

File: STM32Lora_Tempreture_sensor.kicad_sch

Title: lora Tempreture Sensor

Size: A3	Date:	Rev:
KiCad E.D.A. 9.0.2		Id: 1/1