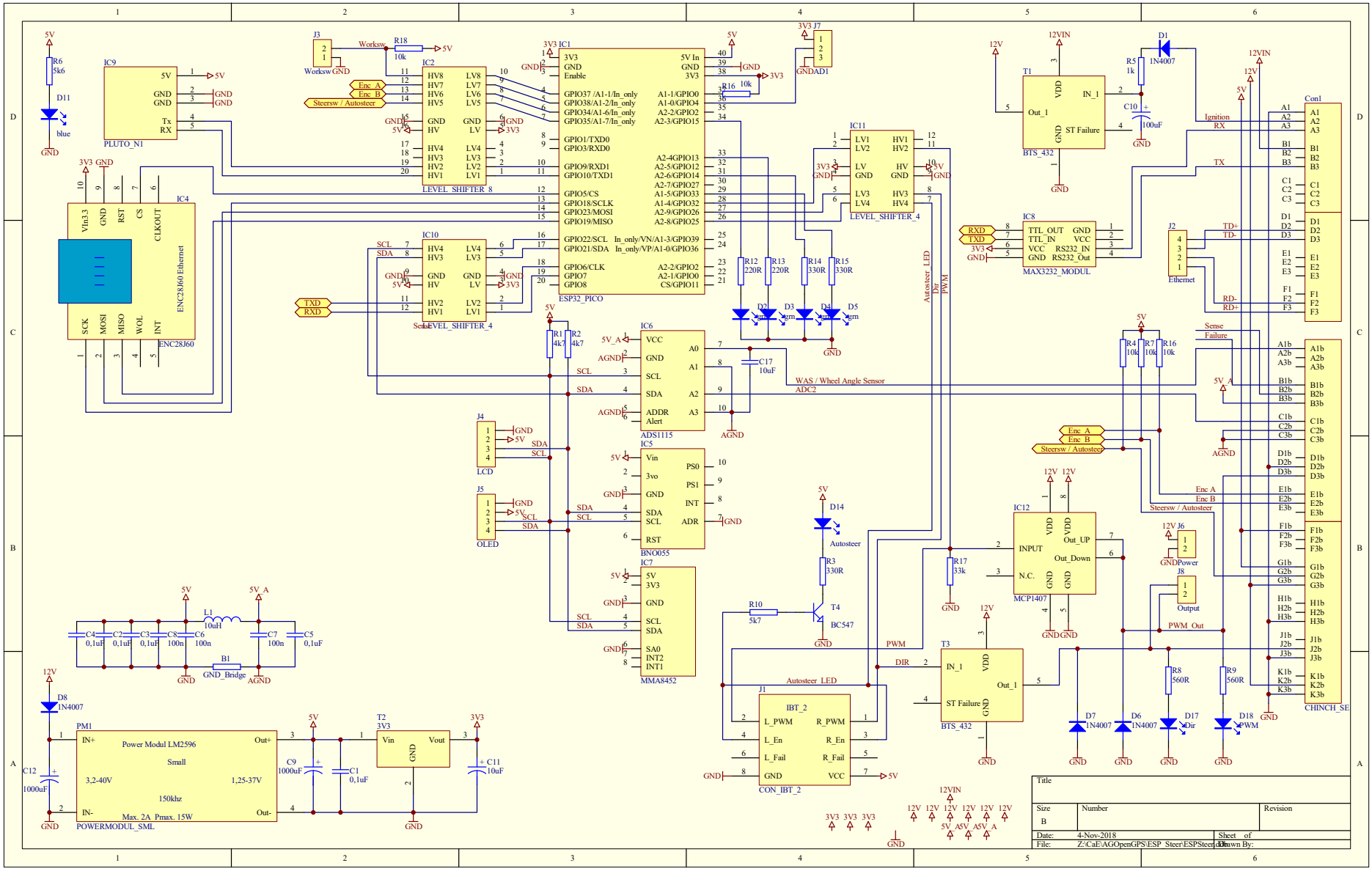
IC1
ESP32_PICO
IC2
LEVEL_SHIFTER_8
IC10
LEVEL_SHIFTER_4
IC11
LEVEL_SHIFTER_4
IC9
PLUTO_N1
IC4
ENC28J60 Ethernet
ENC28J60
IC6
ADS1115
IC5
BNO055
IC7
MMA8452
IC8
MAX3232_MODUL
IC12
MCP1407
T1
BTS_432
T3
BTS_432
J1
IBT_2
CON_IBT_2
PM1
Power Modul LM2596
Small
150khz
Max. 2A Pmax. 15W
POWERMODUL_SML
T2
3V3
Con1
CHINCH_SE
Ethernet
LCD
OLED
Worksw
Enc A
Enc B
Steersw / Autosteer
TXD
RXD
Sense
WAS / Wheel Angle Sensor
ADC2
Autosteer
Autosteer_LED
Dir
PWM
Ignition
RX
TX
TD+
TD-
RD-
RD+
Sense
Failure
Enc A
Enc B
Steersw / Autosteer
PWM_Out
Output
Power
GND_Bridge
Title
Size
B
Number
Revision
Date: 4-Nov-2018
Sheet of
File: Z:\CaE\AGOpenGPS\ESP_Steer\ESPSteer.SchDoc
Drawn By: