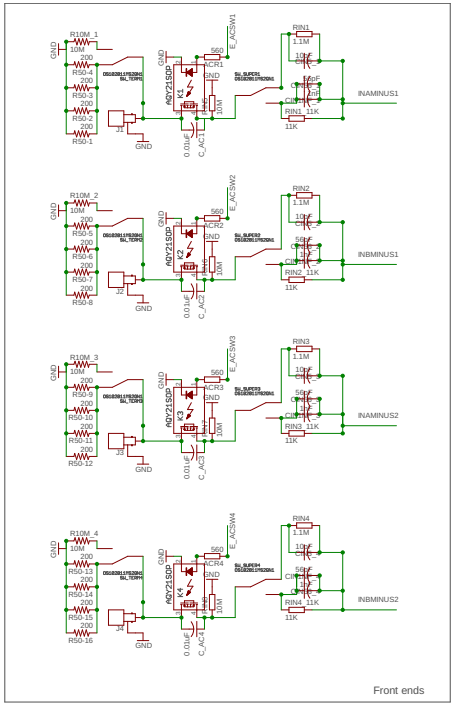
Front ends
INAMINUS1
INBMINUS1
INAMINUS2
INBMINUS2

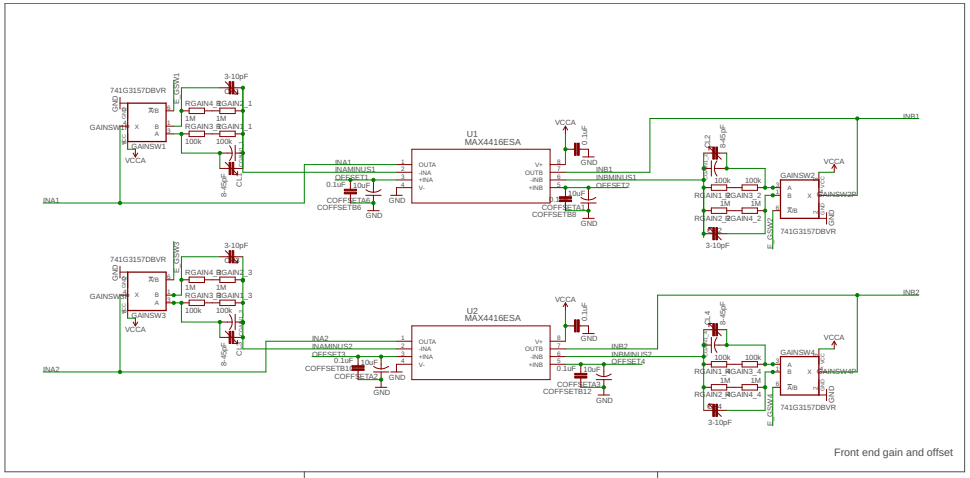
Front end gain and offset
U1
MAX4416ESA
U2
MAX4416ESA
741G3157DBVR
INA1
INA2
INB1
INB2

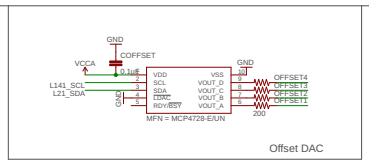
Offset DAC
MFN = MCP4728-E/UN

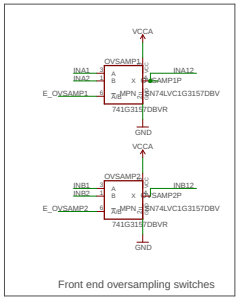
Front end oversampling switches
741G3157DBVR
SN74LVC1G3157DBV

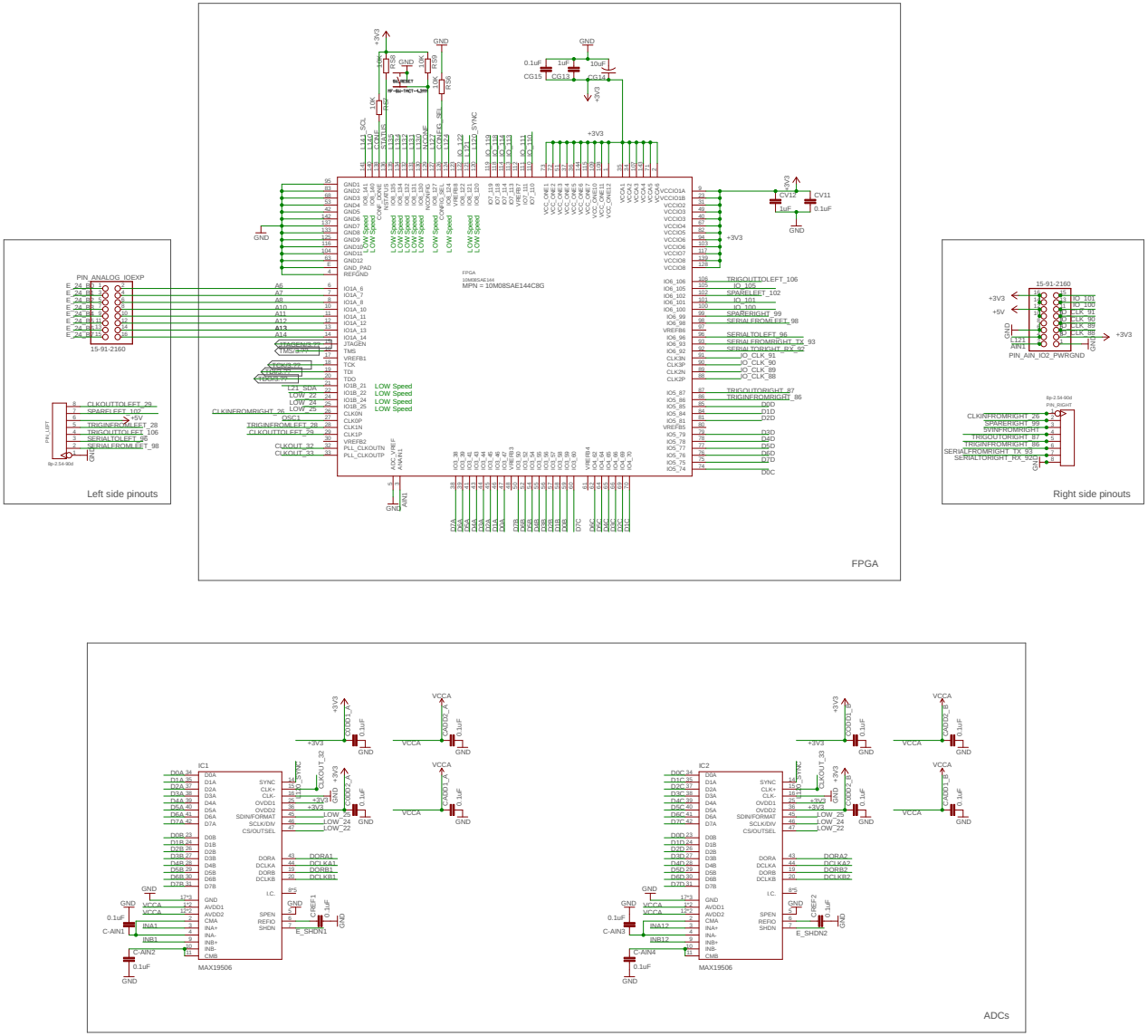
FPGA
10M08SAE144
MPN = 10M08SAE144C8G
15-91-2160
PIN_ANALOG_IOEXP
PIN_UART
Left side pinouts
Right side pinouts
PIN_AIN_IO2_PWRGND
PIN_RIGHT
ADCs
IC1
IC2
MAX19506

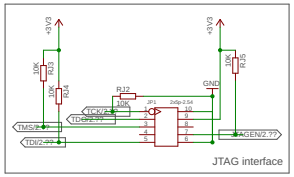
JTAG interface

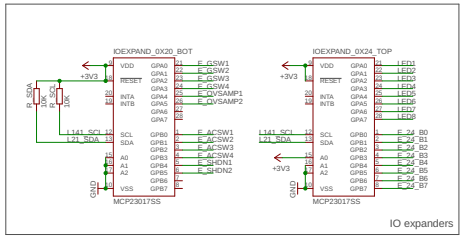
IOEXPAND_0X20_BOT
IOEXPAND_0X24_TOP
MCP23017SS
MCP23017SS
IO expanders

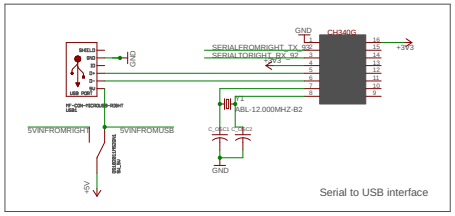
CH340G
Serial to USB interface

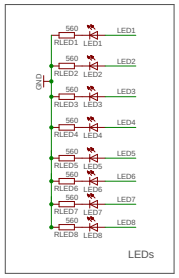
LEDs

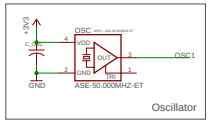
ASE-50.000MHZ-ET
Oscillator

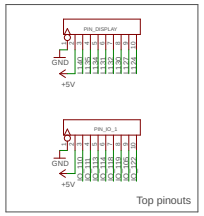
Top pinouts

OSHW Logo

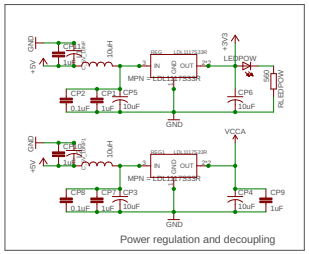
Power regulation and decoupling