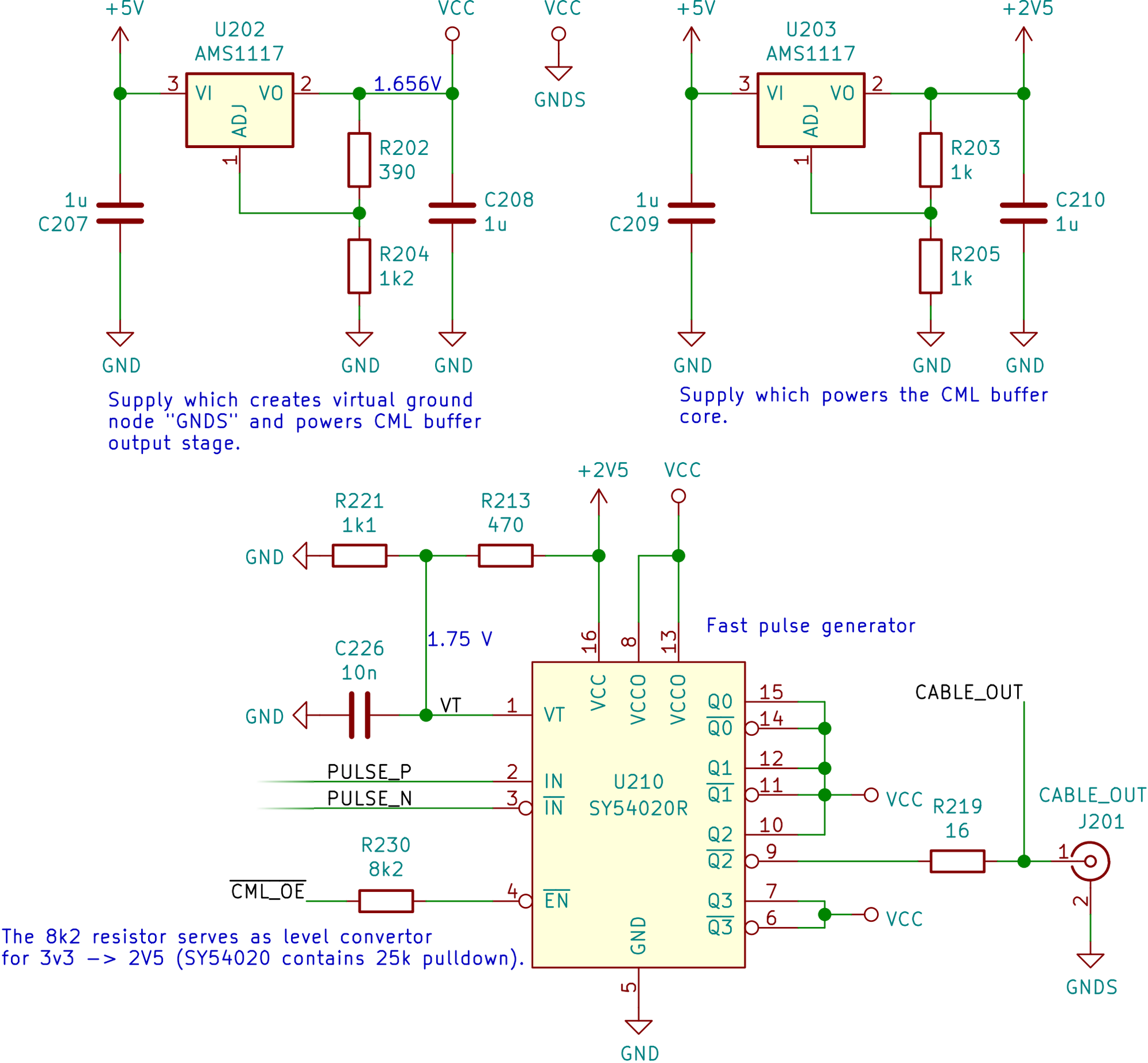
+5V
U202
AMS1117
VI
VO
ADJ
3
2
1
1.656V
VCC
VCC
GNDS
R202
390
R204
1k2
1u
C207
C208
1u
GND
GND
GND
Supply which creates virtual ground node "GNDS" and powers CML buffer output stage.
+5V
U203
AMS1117
VI
VO
ADJ
3
2
1
+2V5
R203
1k
R205
1k
1u
C209
C210
1u
GND
GND
GND
Supply which powers the CML buffer core.
+2V5
VCC
R221
1k1
R213
470
GND
1.75 V
C226
10n
GND
VT
1
16
8
13
Fast pulse generator
VT
VCC
VCCO
VCCO
Q0
Q0
Q1
Q1
Q2
Q2
Q3
Q3
15
14
12
11
10
9
7
6
PULSE_P
PULSE_N
2
3
IN
IN
U210
SY54020R
VCC
R219
16
CABLE_OUT
CABLE_OUT
J201
1
2
GNDS
R230
8k2
CML_OE
4
EN
VCC
GND
5
GND
The 8k2 resistor serves as level convertor for 3v3 –> 2V5 (SY54020 contains 25k pulldown).