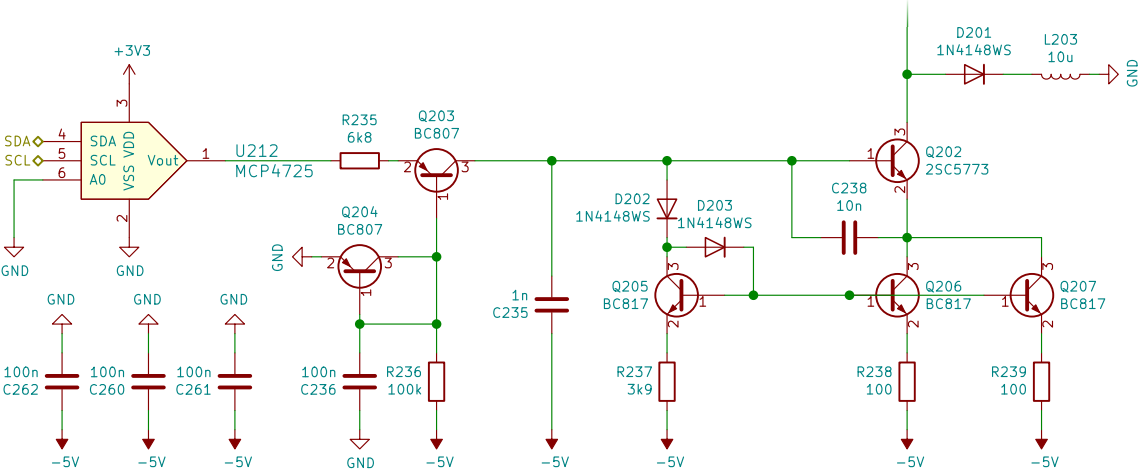

Less than 15 mA (typically 5–7) combined from the −5V supply.