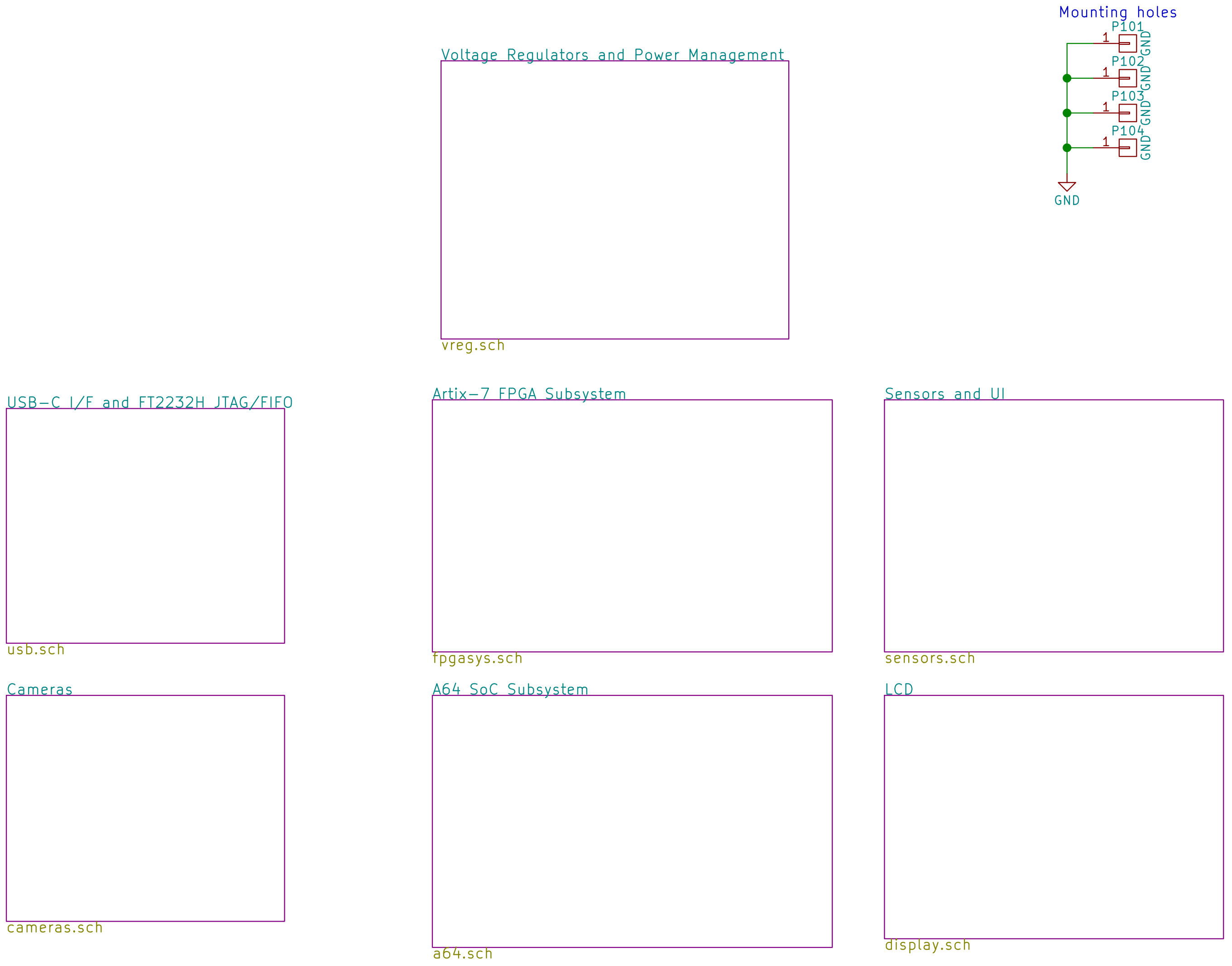
Mounting holes
P101
P102
P103
P104
1
GND
GND
Voltage Regulators and Power Management
vreg.sch
USB-C I/F and FT2232H JTAG/FIFO
usb.sch
Artix-7 FPGA Subsystem
fpgasys.sch
Sensors and UI
sensors.sch
Cameras
cameras.sch
A64 SoC Subsystem
a64.sch
LCD
display.sch

David Shah
Sheet: /
File: mainboard.sch

Title: openMixR 4k Headset Mainboard

Size: A4	Date: 2017-02-14	**Rev: 1.0**
KiCad E.D.A. kicad 4.0.5		Id: 1/19

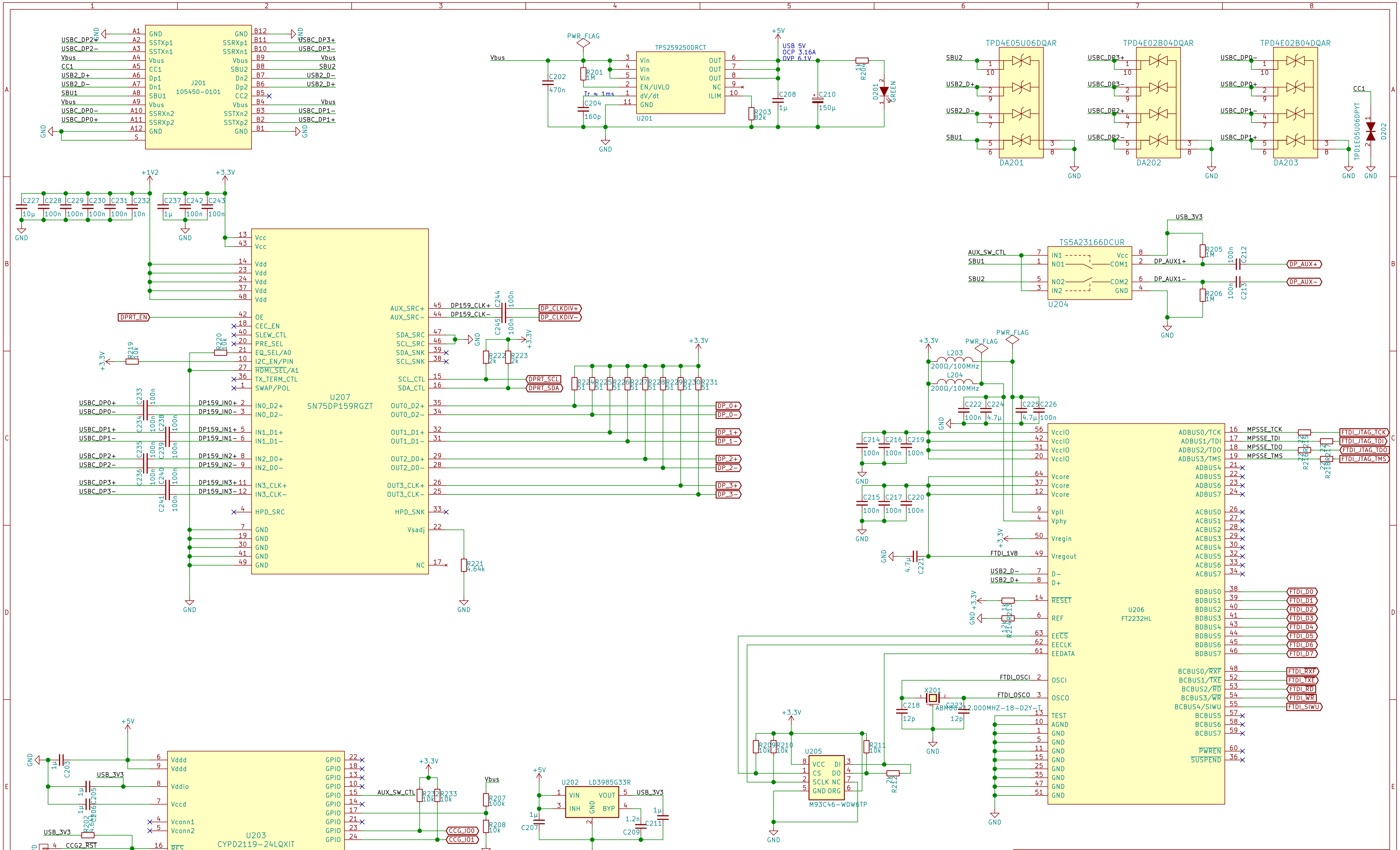
J201
105450-0101
GND
SSTXp1
SSTXn1
Vbus
CC1
Dp1
Dn1
SBU1
SSRXn2
SSRXp2
SSRXp1
SSRXn1
SBU2
Dn2
Dp2
CC2
SSTXn2
SSTXp2
USBC_DP2+
USBC_DP2-
USBC_DP3+
USBC_DP3-
USBC_DP1-
USBC_DP1+
USBC_DP0-
USBC_DP0+
USB2_D+
USB2_D-
SBU1
SBU2
Vbus
CC1
PWR_FLAG
TPS259250DRCT
U201
Vin
EN/UVLO
dV/dt
OUT
NC
ILIM
R201 1M
C202 470n
C204 160p
Tr ≈ 1ms
R203 82k
C208 1µ
C210 150µ
R204 1k
D201 GREEN
+5V
USB 5V
OCP 3.16A
OVP 6.1V
TPD4E05U06DQAR
DA201
TPD4E02B04DQAR
DA202
DA203
TPD1E05U06DPYT
D202
CC1
+1V2
+3.3V
C227 10µ
C228 100n
C229 100n
C230 100n
C231 100n
C232 10n
C237 1µ
C242 100n
C243 100n
U207
SN75DP159RGZT
Vcc
Vdd
OE
CEC_EN
SLEW_CTL
PRE_SEL
EQ_SEL/A0
I2C_EN/PIN
HDMI_SEL/A1
TX_TERM_CTL
SWAP/POL
IN0_D2+
IN0_D2-
IN1_D1+
IN1_D1-
IN2_D0+
IN2_D0-
IN3_CLK+
IN3_CLK-
HPD_SRC
AUX_SRC+
AUX_SRC-
SDA_SRC
SCL_SRC
SDA_SNK
SCL_SNK
SCL_CTL
SDA_CTL
OUT0_D2+
OUT0_D2-
OUT1_D1+
OUT1_D1-
OUT2_D0+
OUT2_D0-
OUT3_CLK+
OUT3_CLK-
HPD_SNK
Vsadj
NC
DPRT_EN
DP159_CLK+
DP159_CLK-
DP_CLKDIV+
DP_CLKDIV-
C244 100n
C245 100n
R222 2k
R223 2k
DPRT_SCL
DPRT_SDA
R219 10k
R220 10k
R221 4.64k
R224 51
R225 51
R226 51
R227 51
R228 51
R229 51
R230 51
R231 51
DP_0+
DP_0-
DP_1+
DP_1-
DP_2+
DP_2-
DP_3+
DP_3-
DP159_IN0+
DP159_IN0-
DP159_IN1+
DP159_IN1-
DP159_IN2+
DP159_IN2-
DP159_IN3+
DP159_IN3-
C233 100n
C234 100n
C235 100n
C236 100n
C238 100n
C239 100n
C240 100n
C241 100n
TS5A23166DCUR
U204
AUX_SW_CTL
IN1
NO1
NO2
IN2
COM1
COM2
USB_3V3
R205 1M
R206 1M
C212 100n
C213 100n
DP_AUX1+
DP_AUX1-
DP_AUX+
DP_AUX-
L203 200Ω/100MHz
L204 200Ω/100MHz
C222 100n
C224 4.7µ
C225 4.7µ
C226 100n
C214 100n
C216 100n
C219 100n
C215 100n
C217 100n
C220 100n
C221 4.7µ
U206
FT2232HL
VccIO
Vcore
Vpll
Vphy
Vregin
Vregout
FTDI_1V8
D-
D+
RESET
REF
EECS
EECLK
EEDATA
OSCI
OSCO
TEST
AGND
ADBUS0/TCK
ADBUS1/TDI
ADBUS2/TDO
ADBUS3/TMS
ADBUS4
ADBUS5
ADBUS6
ADBUS7
ACBUS0
ACBUS1
ACBUS2
ACBUS3
ACBUS4
ACBUS5
ACBUS6
ACBUS7
BDBUS0
BDBUS1
BDBUS2
BDBUS3
BDBUS4
BDBUS5
BDBUS6
BDBUS7
BCBUS0/RXF
BCBUS1/TXE
BCBUS2/RD
BCBUS3/WR
BCBUS4/SIWU
BCBUS5
BCBUS6
BCBUS7
PWREN
SUSPEND
MPSSE_TCK
MPSSE_TDI
MPSSE_TDO
MPSSE_TMS
FTDI_JTAG_TCK
FTDI_JTAG_TDI
FTDI_JTAG_TDO
FTDI_JTAG_TMS
FTDI_D0
FTDI_D1
FTDI_D2
FTDI_D3
FTDI_D4
FTDI_D5
FTDI_D6
FTDI_D7
FTDI_RXF
FTDI_TXE
FTDI_RD
FTDI_WR
FTDI_SIWU
R213 12k
R214
R215
R216
R217
R218
FTDI_OSCI
FTDI_OSCO
X201
ABM8G-12.000MHZ-18-D2Y-T
C218 12p
C223 12p
U205
M93C46-WDW6TP
VCC
CS
SCLK
GND
DI
DO
NC
ORG
R209 10k
R210 10k
R211 10k
R212 2k
U203
CYPD2119-24LQXIT
Vddd
Vddio
Vccd
Vconn1
Vconn2
RES
SWD_IO
SWD_CLK
RD1
CC1
CC2
Vss
GPIO
I2C_0_SCL
I2C_0_SDA
USBC_HPD
DP_HPD
CCG_IO0
CCG_IO1
C203 1µ
C205 1µ
C206 1µ
R202 4.7k
CCG2_RST
CCG2_SWDIO
CCG2_SWDCLK
CCG2_SWD
P201
R232 10k
R233 10k
R207 100k
R208 10k
U202
LD3985G33R
VIN
INH
VOUT
BYP
C207 1µ
C209 1.2n
C211 1µ
GND

CONFIDENTIAL
David Shah
Sheet: /USB-C I/F and FT2232H JTAG/FIFO/
File: usb.sch

Title: openMixR 4k Headset Mainboard

Size: A3	Date: 2017-02-14	Rev: 1.0
KiCad E.D.A. kicad 4.0.5		Id: 2/19

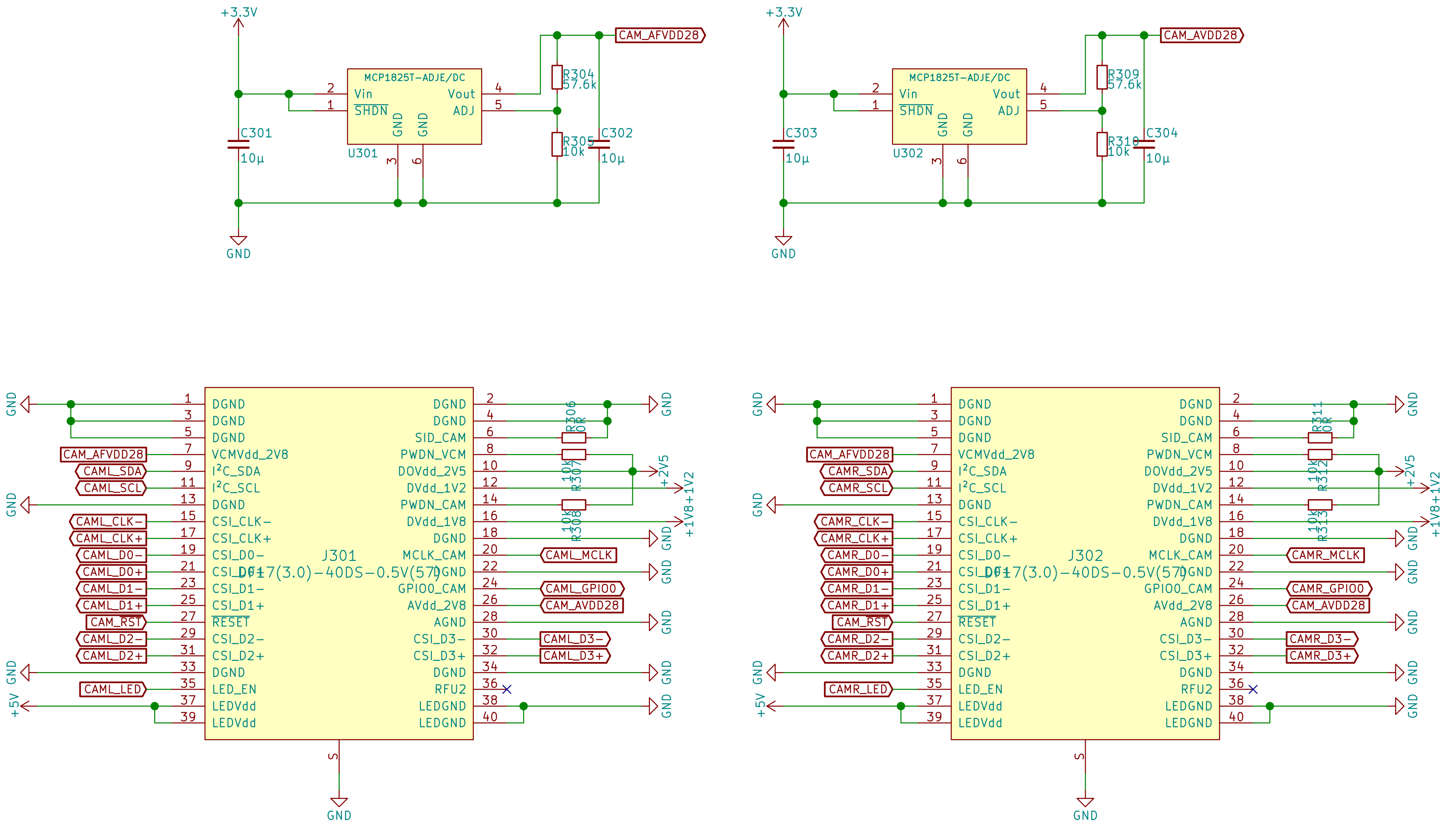
+3.3V
MCP1825T-ADJE/DC
Vin
SHDN
Vout
ADJ
GND
GND
U301
C301
10µ
R304
57.6k
R305
10k
C302
10µ
CAM_AFVDD28
GND
+3.3V
MCP1825T-ADJE/DC
Vin
SHDN
Vout
ADJ
GND
GND
U302
C303
10µ
R309
57.6k
R310
10k
C304
10µ
CAM_AVDD28
GND
J301
DF17(3.0)-40DS-0.5V(57)
DGND
DGND
DGND
VCMVdd_2V8
I²C_SDA
I²C_SCL
DGND
CSI_CLK-
CSI_CLK+
CSI_D0-
CSI_D0+
CSI_D1-
CSI_D1+
RESET
CSI_D2-
CSI_D2+
DGND
LED_EN
LEDVdd
LEDVdd
DGND
DGND
SID_CAM
PWDN_VCM
DOVdd_2V5
DVdd_1V2
PWDN_CAM
DVdd_1V8
DGND
MCLK_CAM
DGND
GPIO0_CAM
AVdd_2V8
AGND
CSI_D3-
CSI_D3+
DGND
RFU2
LEDGND
LEDGND
CAM_AFVDD28
CAML_SDA
CAML_SCL
CAML_CLK-
CAML_CLK+
CAML_D0-
CAML_D0+
CAML_D1-
CAML_D1+
CAM_RST
CAML_D2-
CAML_D2+
CAML_LED
+5V
R306
0R
R307
10k
R308
10k
+2V5
+1V8
+1V2
CAML_MCLK
CAML_GPIO0
CAM_AVDD28
CAML_D3-
CAML_D3+
GND
J302
DF17(3.0)-40DS-0.5V(57)
CAM_AFVDD28
CAMR_SDA
CAMR_SCL
CAMR_CLK-
CAMR_CLK+
CAMR_D0-
CAMR_D0+
CAMR_D1-
CAMR_D1+
CAM_RST
CAMR_D2-
CAMR_D2+
CAMR_LED
+5V
R311
0R
R312
10k
R313
10k
+2V5
+1V8
+1V2
CAMR_MCLK
CAMR_GPIO0
CAM_AVDD28
CAMR_D3-
CAMR_D3+
GND

CONFIDENTIAL

David Shah

Sheet: /Cameras/

File: cameras.sch

Title: openMixR 4k Headset Mainboard

Size: A3	Date: 2017-02-14	**Rev: 1.0**
KiCad E.D.A. kicad 4.0.5		Id: 3/19

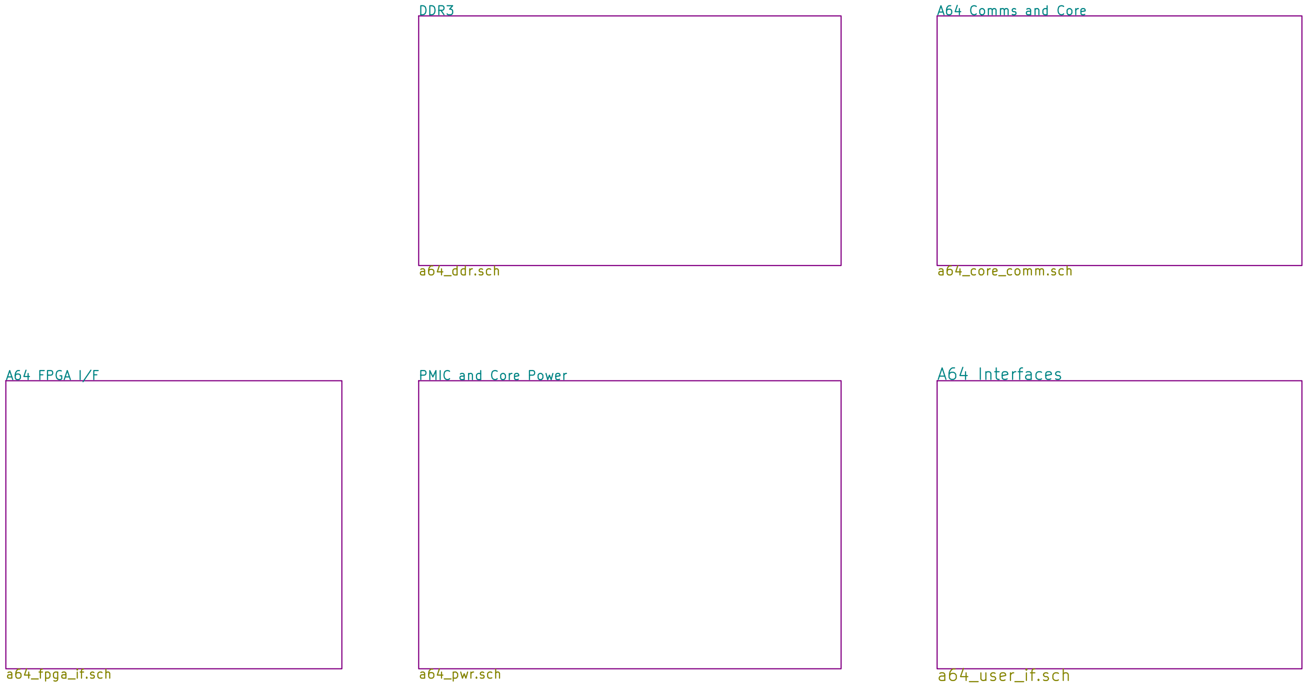
DDR3
a64_ddr.sch
A64 Comms and Core
a64_core_comm.sch
A64 FPGA I/F
a64_fpga_if.sch
PMIC and Core Power
a64_pwr.sch
A64 Interfaces
a64_user_if.sch

CONFIDENTIAL

David Shah

Sheet: /A64 SoC Subsystem/
File: a64.sch

Title: openMixR 4k Headset Mainboard

Size: A4	Date: 2017-02-14	**Rev: 1.0**
KiCad E.D.A. kicad 4.0.5		Id: 4/19

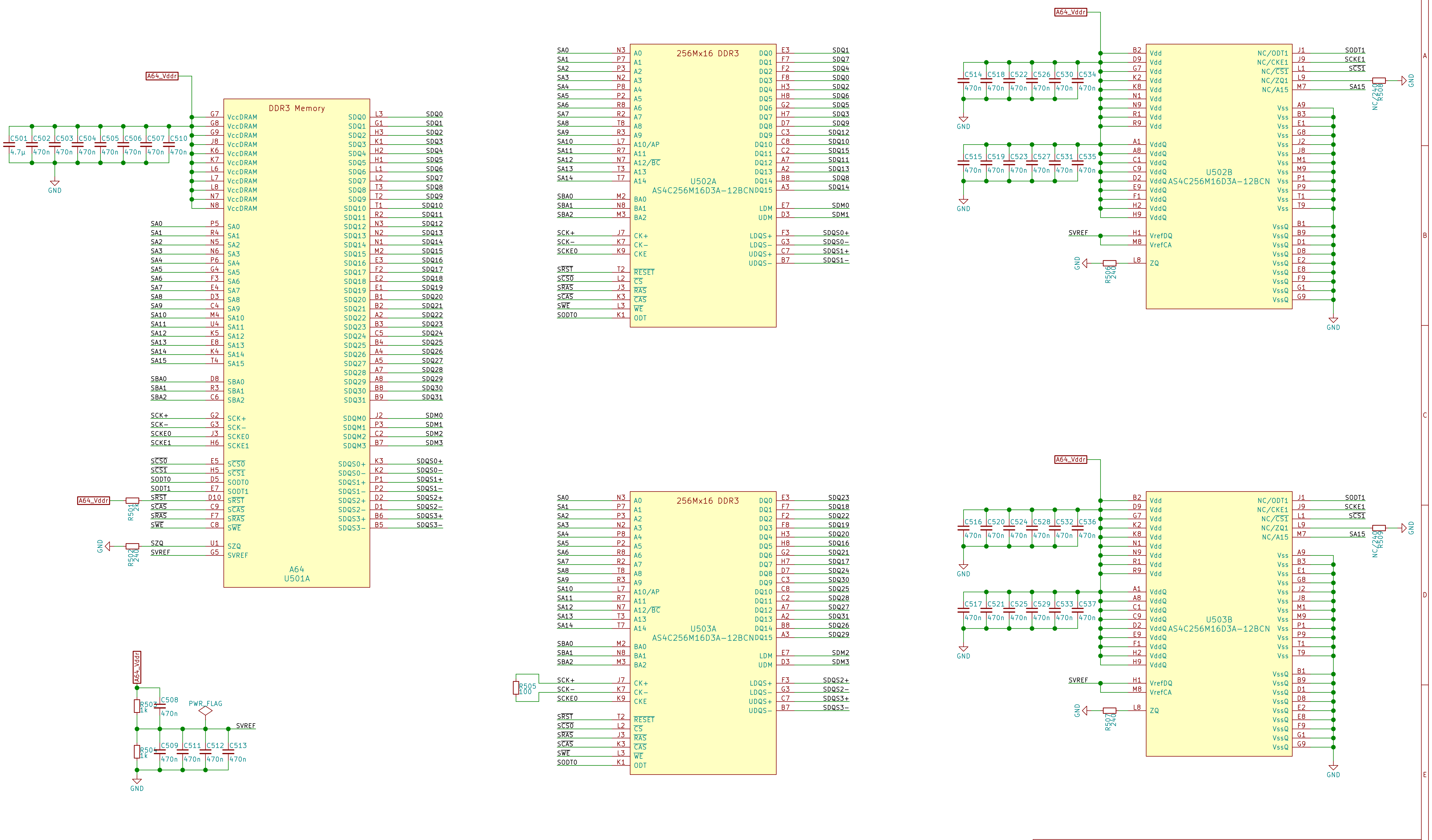
DDR3 Memory
A64
U501A
VccDRAM
SA0 … SA15
SBA0 SBA1 SBA2
SCK+ SCK− SCKE0 SCKE1
SCS0 SCS1 SODT0 SODT1 SRST SCAS SRAS SWE
SZQ SVREF
SDQ0 … SDQ31
SDQM0 SDQM1 SDQM2 SDQM3
SDQS0+ SDQS0− SDQS1+ SDQS1− SDQS2+ SDQS2− SDQS3+ SDQS3−
A64_Vddr
C501 4.7µ
C502 470n
C503 470n
C504 470n
C505 470n
C506 470n
C507 470n
C510 470n
GND
R501 240
R502 240
R503 1k
R504 1k
C508 470n
C509 470n
C511 470n
C512 470n
C513 470n
PWR_FLAG
SVREF
256Mx16 DDR3
U502A
AS4C256M16D3A−12BCN
U503A
AS4C256M16D3A−12BCN
R505 100
A0 … A9 A10/AP A11 A12/BC A13 A14
BA0 BA1 BA2
CK+ CK− CKE
RESET CS RAS CAS WE ODT
DQ0 … DQ15
LDM UDM
LDQS+ LDQS− UDQS+ UDQS−
U502B
AS4C256M16D3A−12BCN
U503B
AS4C256M16D3A−12BCN
Vdd VddQ Vss VssQ
VrefDQ VrefCA ZQ
NC/ODT1 NC/CKE1 NC/CS1 NC/ZQ1 NC/A15
SODT1 SCKE1 SCS1 SA15
C514 C515 C516 C517 C518 C519 C520 C521 C522 C523 C524 C525 C526 C527 C528 C529 C530 C531 C532 C533 C534 C535 C536 C537 470n
R506 240
R507 240
R508 NC/240
R509 NC/240

CONFIDENTIAL

David Shah

Sheet: /A64 SoC Subsystem/DDR3/

File: a64_ddr.sch

Title: openMixR 4k Headset Mainboard

Size: A3 Date: 2017-02-14 **Rev: 1.0**

KiCad E.D.A. kicad 4.0.5 Id: 5/19

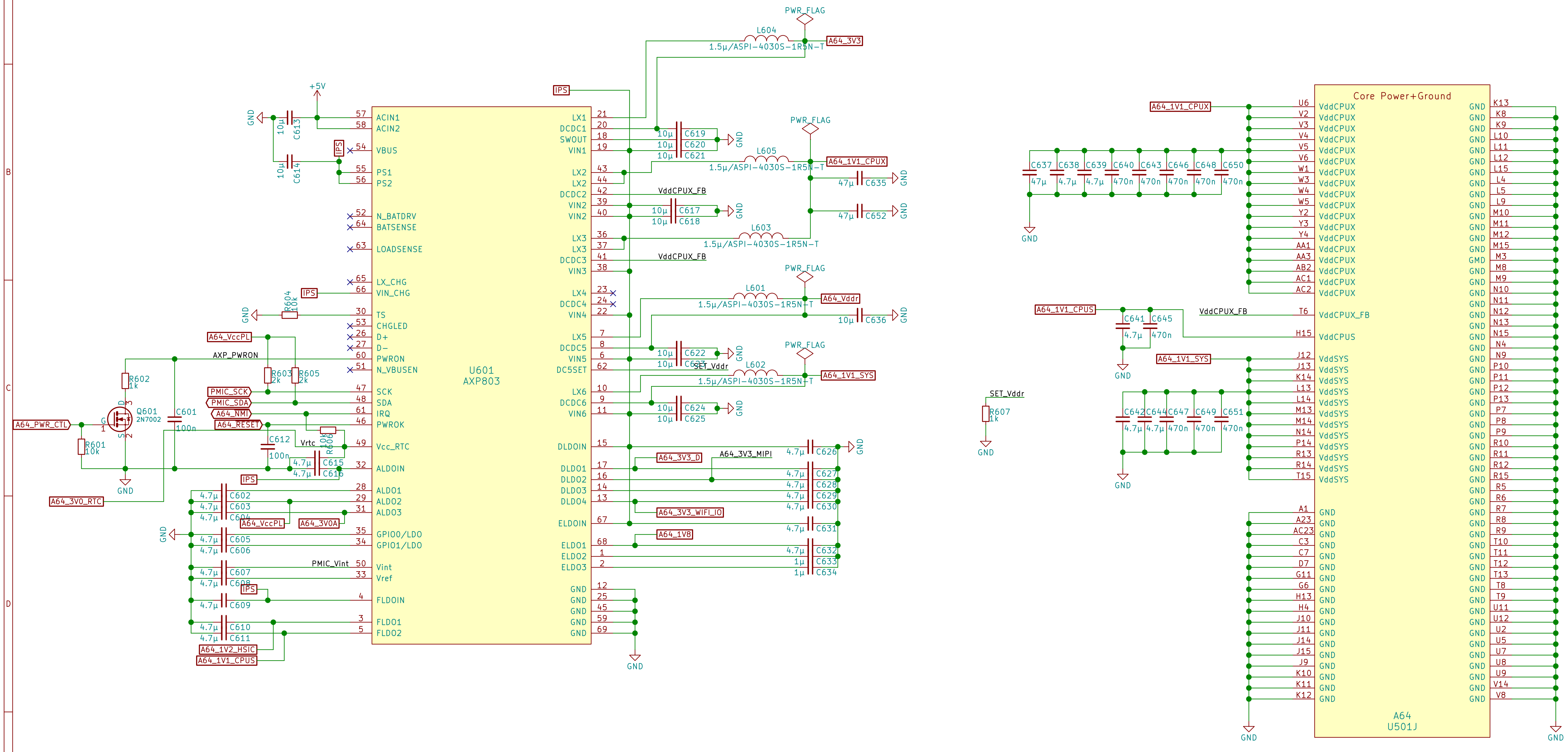
U601
AXP803
A64
U501J
Core Power+Ground
+5V
IPS
PWR_FLAG
A64_3V3
A64_1V1_CPUX
A64_Vddr
A64_1V1_SYS
A64_VccPL
A64_3V0A
A64_3V3_D
A64_3V3_MIPI
A64_3V3_WIFI_IO
A64_1V8
A64_1V2_HSIC
A64_1V1_CPUS
A64_PWR_CTL
A64_3V0_RTC
A64_NMI
A64_RESET
PMIC_SCK
PMIC_SDA
PMIC_Vint
AXP_PWRON
VddCPUX_FB
SET_Vddr
Vrtc
Q601
2N7002
R601 10k
R602 1k
R603 2k
R604 10k
R605 2k
R606 10k
R607 1k
C601 100n
C612 100n
L601 1.5µ/ASPI-4030S-1R5N-T
L602 1.5µ/ASPI-4030S-1R5N-T
L603 1.5µ/ASPI-4030S-1R5N-T
L604 1.5µ/ASPI-4030S-1R5N-T
L605 1.5µ/ASPI-4030S-1R5N-T
ACIN1
ACIN2
VBUS
PS1
PS2
N_BATDRV
BATSENSE
LOADSENSE
LX_CHG
VIN_CHG
TS
CHGLED
D+
D-
PWRON
N_VBUSEN
SCK
SDA
IRQ
PWROK
Vcc_RTC
ALDOIN
ALDO1
ALDO2
ALDO3
GPIO0/LDO
GPIO1/LDO
Vint
Vref
FLDOIN
FLDO1
FLDO2
LX1
DCDC1
SWOUT
VIN1
LX2
DCDC2
VIN2
LX3
DCDC3
VIN3
LX4
DCDC4
VIN4
LX5
DCDC5
VIN5
DC5SET
LX6
DCDC6
VIN6
DLDOIN
DLDO1
DLDO2
DLDO3
DLDO4
ELDOIN
ELDO1
ELDO2
ELDO3
GND
VddCPUX
VddCPUX_FB
VddCPUS
VddSYS

CONFIDENTIAL

David Shah

Sheet: /A64 SoC Subsystem/PMIC and Core Power/

File: a64_pwr.sch

Title: openMixR 4k Headset Mainboard

Size: A3	Date: 2017-02-14	**Rev: 1.0**
KiCad E.D.A. kicad 4.0.5		Id: 6/19

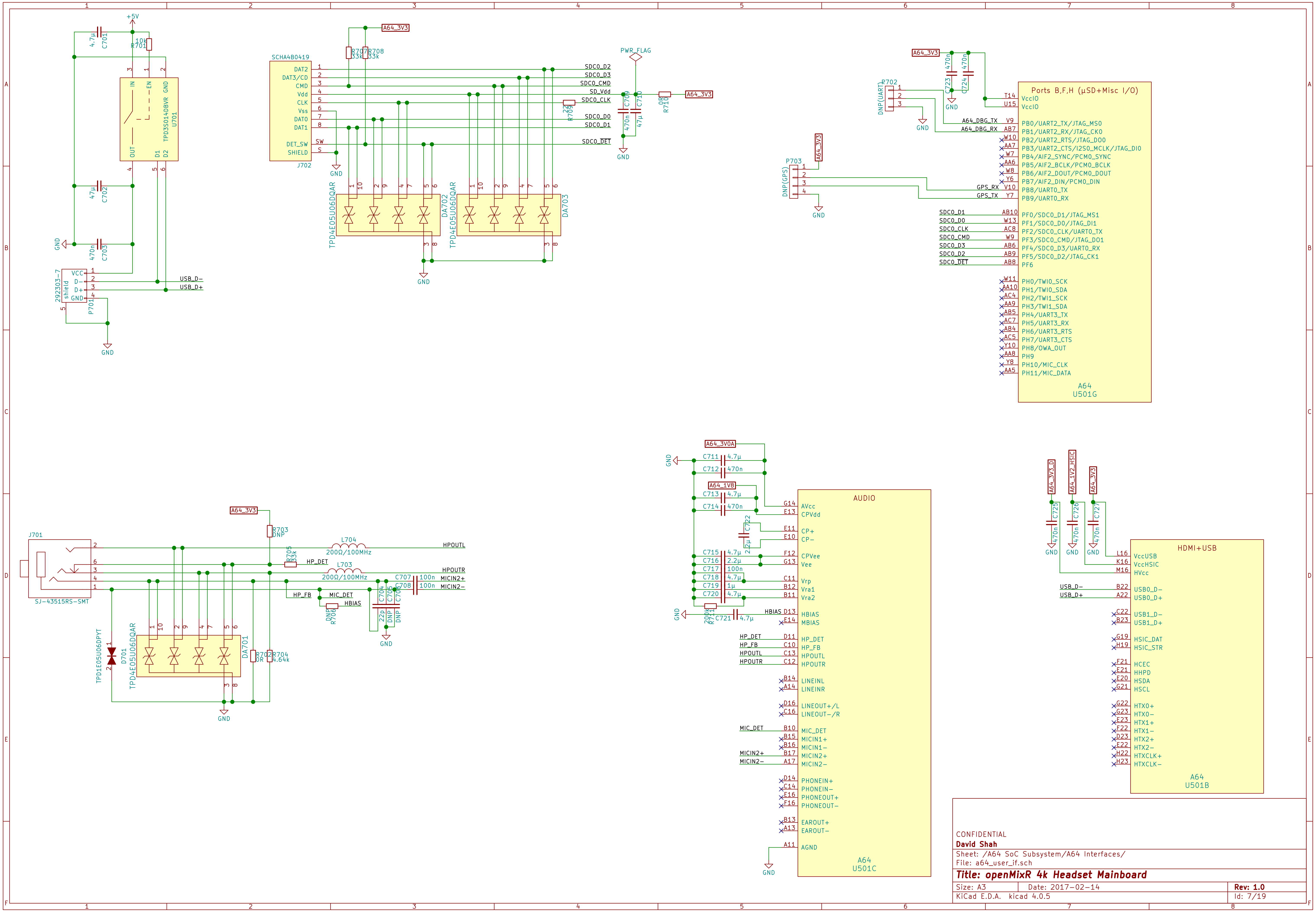
+5V
C701 4.7µ
R701 10K
U701 TPD3S014DBVR
IN
EN
GND
OUT
D1
D2
C702 47µ
C703 470n
GND
P701 292303-7
VCC
D-
D+
GND
shield
USB_D-
USB_D+
A64_3V3
R707 33k
R708 33k
J702 SCHA4B0419
DAT2
DAT3/CD
CMD
Vdd
CLK
Vss
DAT0
DAT1
DET_SW
SHIELD
SW
S
SDC0_D2
SDC0_D3
SDC0_CMD
SD_Vdd
SDC0_CLK
SDC0_D0
SDC0_D1
SDC0_DET
R709 22
PWR_FLAG
C709 470n
C710 47µ
R710 0R
DA702 TPD4E05U06DQAR
DA703 TPD4E05U06DQAR
P702 DNP(UART)
A64_DBG_TX
A64_DBG_RX
C723 470n
C724 470n
P703 DNP(GPS)
GPS_RX
GPS_TX
Ports B,F,H (µSD+Misc I/O)
VccIO
PB0/UART2_TX/JTAG_MS0
PB1/UART2_RX/JTAG_CK0
PB2/UART2_RTS/JTAG_DO0
PB3/UART2_CTS/I2S0_MCLK/JTAG_DI0
PB4/AIF2_SYNC/PCM0_SYNC
PB5/AIF2_BCLK/PCM0_BCLK
PB6/AIF2_DOUT/PCM0_DOUT
PB7/AIF2_DIN/PCM0_DIN
PB8/UART0_TX
PB9/UART0_RX
PF0/SDC0_D1/JTAG_MS1
PF1/SDC0_D0/JTAG_DI1
PF2/SDC0_CLK/UART0_TX
PF3/SDC0_CMD/JTAG_DO1
PF4/SDC0_D3/UART0_RX
PF5/SDC0_D2/JTAG_CK1
PF6
PH0/TWI0_SCK
PH1/TWI0_SDA
PH2/TWI1_SCK
PH3/TWI1_SDA
PH4/UART3_TX
PH5/UART3_RX
PH6/UART3_RTS
PH7/UART3_CTS
PH8/OWA_OUT
PH9
PH10/MIC_CLK
PH11/MIC_DATA
A64
U501G
J701 SJ-43515RS-SMT
R703 DNP
R705 33k
HP_DET
L704 200Ω/100MHz
HPOUTL
L703 200Ω/100MHz
HPOUTR
C707 100n
C708 100n
MICIN2+
MICIN2-
HP_FB
MIC_DET
R706 DNP
HBIAS
C704 22p
C705 DNP
C706 DNP
D701 TPD1E05U06DPYT
DA701 TPD4E05U06DQAR
R702 0R
R704 4.64k
A64_3V0A
C711 4.7µ
C712 470n
A64_1V8
C713 4.7µ
C714 470n
C722 2.2µ
C715 4.7µ
C716 2.2µ
C717 100n
C718 4.7µ
C719 1µ
C720 4.7µ
R711 200k
C721 4.7µ
AUDIO
AVcc
CPVdd
CP+
CP-
CPVee
Vee
Vrp
Vra1
Vra2
HBIAS
MBIAS
HP_DET
HP_FB
HPOUTL
HPOUTR
LINEINL
LINEINR
LINEOUT+/L
LINEOUT-/R
MIC_DET
MICIN1+
MICIN1-
MICIN2+
MICIN2-
PHONEIN+
PHONEIN-
PHONEOUT+
PHONEOUT-
EAROUT+
EAROUT-
AGND
A64
U501C
A64_3V3_D
A64_1V2_HSIC
A64_3V3
C725 470n
C726 470n
C727 470n
HDMI+USB
VccUSB
VccHSIC
HVcc
USB0_D-
USB0_D+
USB1_D-
USB1_D+
HSIC_DAT
HSIC_STR
HCEC
HHPD
HSDA
HSCL
HTX0+
HTX0-
HTX1+
HTX1-
HTX2+
HTX2-
HTXCLK+
HTXCLK-
A64
U501B

CONFIDENTIAL

David Shah

Sheet: /A64 SoC Subsystem/A64 Interfaces/

File: a64_user_if.sch

Title: openMixR 4k Headset Mainboard

Size: A3 | Date: 2017-02-14 | **Rev: 1.0**

KiCad E.D.A. kicad 4.0.5 | Id: 7/19

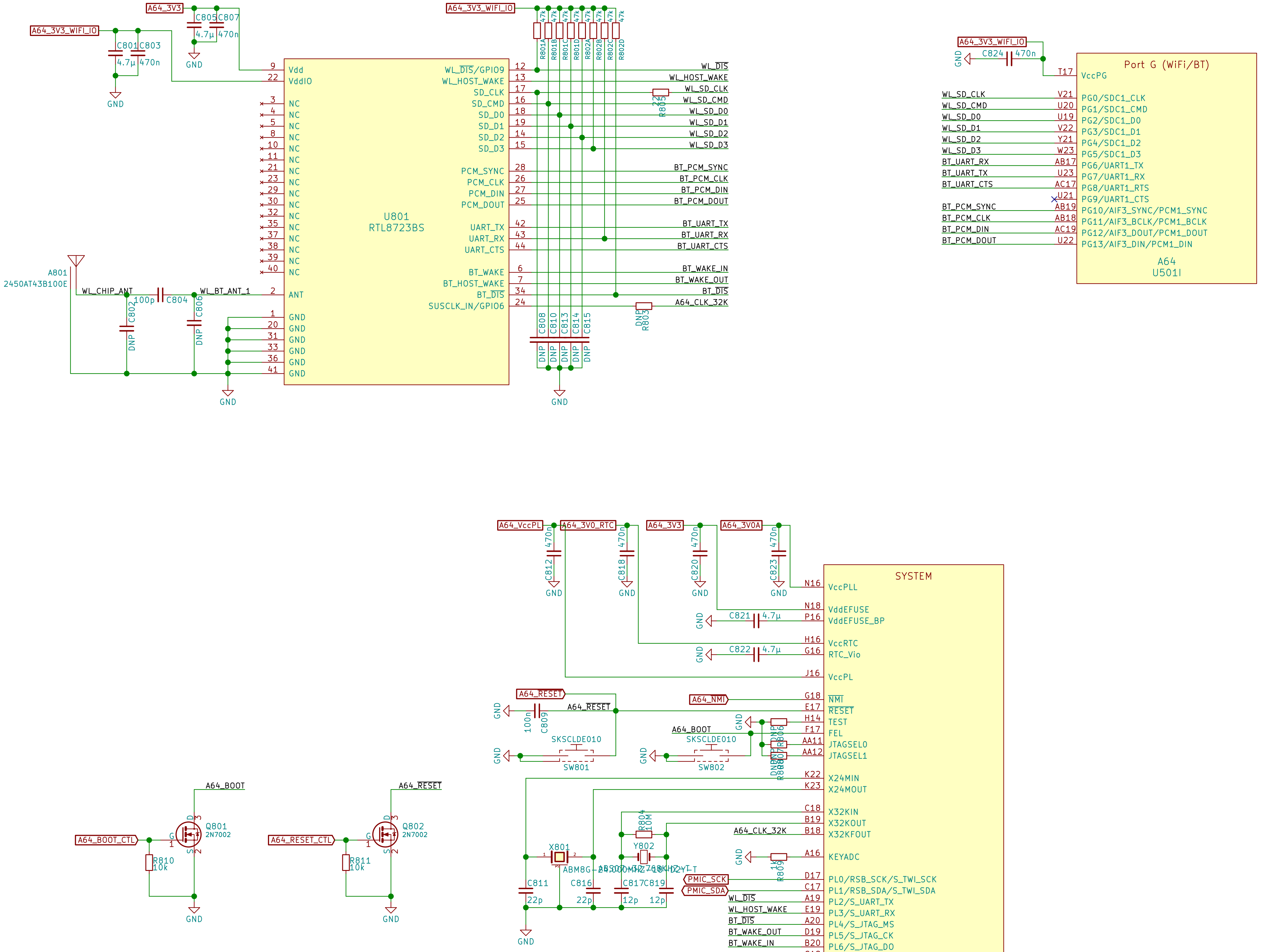
A64_3V3_WIFI_IO
A64_3V3
C801 4.7µ
C803 470n
C805 4.7µ
C807 470n
GND
U801
RTL8723BS
Vdd
VddIO
NC
ANT
GND
WL_DIS/GPIO9
WL_HOST_WAKE
SD_CLK
SD_CMD
SD_D0
SD_D1
SD_D2
SD_D3
PCM_SYNC
PCM_CLK
PCM_DIN
PCM_DOUT
UART_TX
UART_RX
UART_CTS
BT_WAKE
BT_HOST_WAKE
BT_DIS
SUSCLK_IN/GPIO6
R801A R801B R801C R801D R802A R802B R802C R802D 47k
R805 22
R803 DNP
C808 C810 C813 C814 C815 DNP
WL_DIS
WL_HOST_WAKE
WL_SD_CLK
WL_SD_CMD
WL_SD_D0
WL_SD_D1
WL_SD_D2
WL_SD_D3
BT_PCM_SYNC
BT_PCM_CLK
BT_PCM_DIN
BT_PCM_DOUT
BT_UART_TX
BT_UART_RX
BT_UART_CTS
BT_WAKE_IN
BT_WAKE_OUT
BT_DIS
A64_CLK_32K
A801
2450AT43B100E
WL_CHIP_ANT
WL_BT_ANT_1
C802 DNP
C804 100p
C806 DNP
Port G (WiFi/BT)
A64
U501I
C824 470n
VccPG
T17
V21 PG0/SDC1_CLK
U20 PG1/SDC1_CMD
U19 PG2/SDC1_D0
V22 PG3/SDC1_D1
Y21 PG4/SDC1_D2
W23 PG5/SDC1_D3
AB17 PG6/UART1_TX
U23 PG7/UART1_RX
AC17 PG8/UART1_RTS
U21 PG9/UART1_CTS
AB19 PG10/AIF3_SYNC/PCM1_SYNC
AB18 PG11/AIF3_BCLK/PCM1_BCLK
AC19 PG12/AIF3_DOUT/PCM1_DOUT
U22 PG13/AIF3_DIN/PCM1_DIN
A64_VccPL
A64_3V0_RTC
A64_3V0A
C812 470n
C818 470n
C820 470n
C823 470n
C821 4.7µ
C822 4.7µ
SYSTEM
A64
U501D
N16 VccPLL
N18 VddEFUSE
P16 VddEFUSE_BP
H16 VccRTC
G16 RTC_Vio
J16 VccPL
G18 NMI
E17 RESET
H14 TEST
F17 FEL
AA11 JTAGSEL0
AA12 JTAGSEL1
K22 X24MIN
K23 X24MOUT
C18 X32KIN
B19 X32KOUT
B18 X32KFOUT
A16 KEYADC
D17 PL0/RSB_SCK/S_TWI_SCK
C17 PL1/RSB_SDA/S_TWI_SDA
A19 PL2/S_UART_TX
E19 PL3/S_UART_RX
A20 PL4/S_JTAG_MS
D19 PL5/S_JTAG_CK
B20 PL6/S_JTAG_DO
C19 PL7/S_JTAG_DI
B21 PL8/S_TWI_SCK
D20 PL9/S_TWI_SDA
D21 PL10/S_PWM
C20 PL11/S_CIR_RX
D22 PL12
A64_RESET
A64_NMI
A64_BOOT
C809 100n
SKSCLDE010
SW801
SW802
R806 R807 DNP
R808 1k
X801
ABM8G-24.000MHZ
Y802 32.768kHz
R804 10M
C811 22p
C816 22p
C817 12p
C819 12p
PMIC_SCK
PMIC_SDA
A64_BOOT_CTL
A64_RESET_CTL
Q801 2N7002
Q802 2N7002
R810 10k
R811 10k

CONFIDENTIAL

David Shah

Sheet: /A64 SoC Subsystem/A64 Comms and Core/

File: a64_core_comm.sch

Title: openMixR 4k Headset Mainboard

Size: A3	Date: 2017-02-14	**Rev: 1.0**
KiCad E.D.A. kicad 4.0.5		Id: 8/19

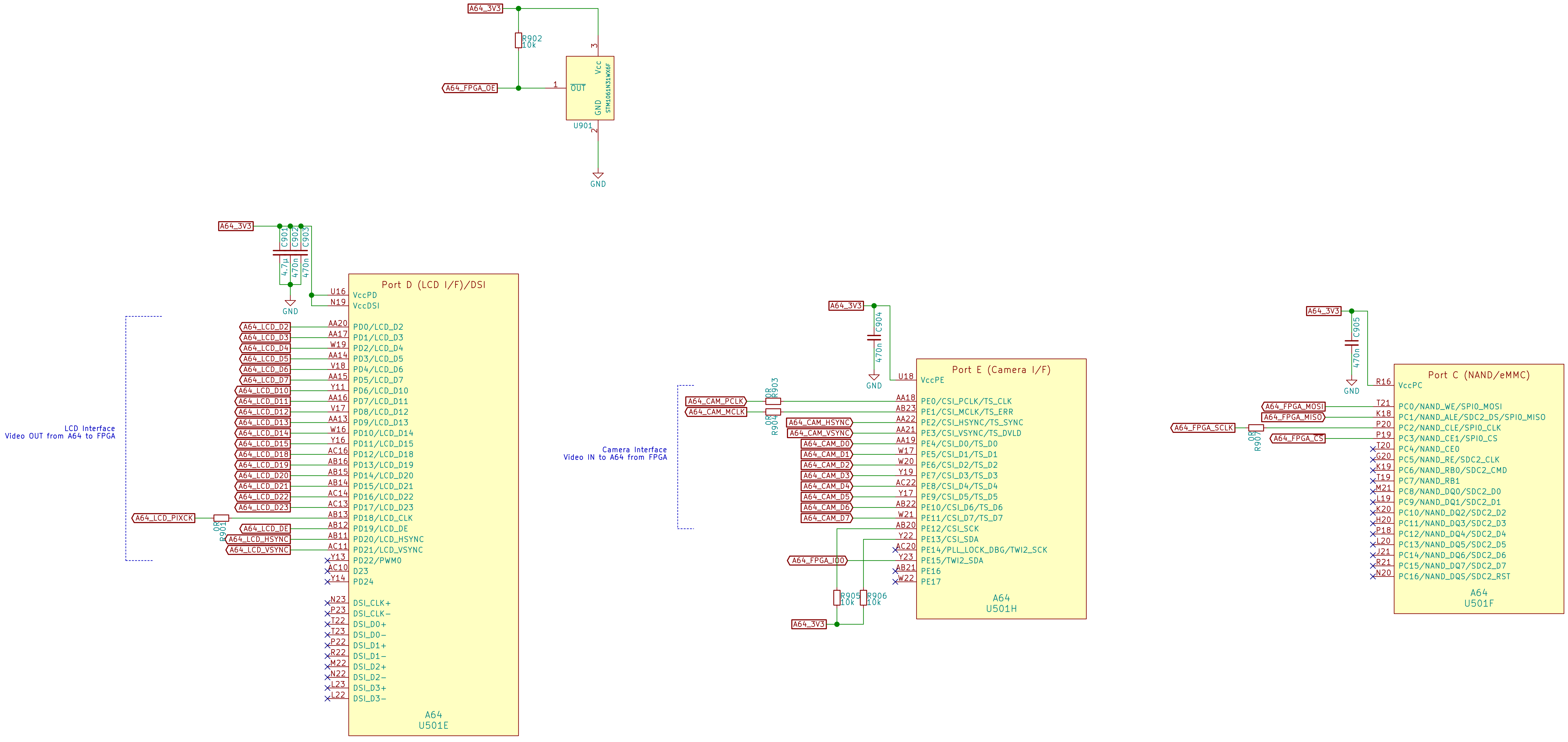
A64_3V3
R902
10k
A64_FPGA_OE
1
OUT
Vcc
GND
3
2
STM1061N31WX6F
U901
GND
A64_3V3
C901
C902
C903
4.7µ
470n
470n
GND
Port D (LCD I/F)/DSI
U16 VccPD
N19 VccDSI
A64_LCD_D2 AA20 PD0/LCD_D2
A64_LCD_D3 AA17 PD1/LCD_D3
A64_LCD_D4 W19 PD2/LCD_D4
A64_LCD_D5 AA14 PD3/LCD_D5
A64_LCD_D6 V18 PD4/LCD_D6
A64_LCD_D7 AA15 PD5/LCD_D7
A64_LCD_D10 Y11 PD6/LCD_D10
A64_LCD_D11 AA16 PD7/LCD_D11
A64_LCD_D12 V17 PD8/LCD_D12
A64_LCD_D13 AA13 PD9/LCD_D13
A64_LCD_D14 W16 PD10/LCD_D14
A64_LCD_D15 Y16 PD11/LCD_D15
A64_LCD_D18 AC16 PD12/LCD_D18
A64_LCD_D19 AB16 PD13/LCD_D19
A64_LCD_D20 AB15 PD14/LCD_D20
A64_LCD_D21 AB14 PD15/LCD_D21
A64_LCD_D22 AC14 PD16/LCD_D22
A64_LCD_D23 AC13 PD17/LCD_D23
A64_LCD_PIXCK R901 0R AB13 PD18/LCD_CLK
A64_LCD_DE AB12 PD19/LCD_DE
A64_LCD_HSYNC AB11 PD20/LCD_HSYNC
A64_LCD_VSYNC AC11 PD21/LCD_VSYNC
Y13 PD22/PWM0
AC10 D23
Y14 PD24
N23 DSI_CLK+
P23 DSI_CLK−
T22 DSI_D0+
T23 DSI_D0−
P22 DSI_D1+
R22 DSI_D1−
M22 DSI_D2+
N22 DSI_D2−
L23 DSI_D3+
L22 DSI_D3−
A64
U501E
LCD Interface
Video OUT from A64 to FPGA
A64_3V3
C904
470n
GND
Port E (Camera I/F)
U18 VccPE
A64_CAM_PCLK R903 0R AA18 PE0/CSI_PCLK/TS_CLK
A64_CAM_MCLK R904 0R AB23 PE1/CSI_MCLK/TS_ERR
A64_CAM_HSYNC AA22 PE2/CSI_HSYNC/TS_SYNC
A64_CAM_VSYNC AA21 PE3/CSI_VSYNC/TS_DVLD
A64_CAM_D0 AA19 PE4/CSI_D0/TS_D0
A64_CAM_D1 W17 PE5/CSI_D1/TS_D1
A64_CAM_D2 W20 PE6/CSI_D2/TS_D2
A64_CAM_D3 Y19 PE7/CSI_D3/TS_D3
A64_CAM_D4 AC22 PE8/CSI_D4/TS_D4
A64_CAM_D5 Y17 PE9/CSI_D5/TS_D5
A64_CAM_D6 AB22 PE10/CSI_D6/TS_D6
A64_CAM_D7 W21 PE11/CSI_D7/TS_D7
AB20 PE12/CSI_SCK
Y22 PE13/CSI_SDA
AC20 PE14/PLL_LOCK_DBG/TWI2_SCK
A64_FPGA_IO0 Y23 PE15/TWI2_SDA
AB21 PE16
W22 PE17
R905 10k
R906 10k
A64_3V3
A64
U501H
Camera Interface
Video IN to A64 from FPGA
A64_3V3
C905
470n
GND
Port C (NAND/eMMC)
R16 VccPC
A64_FPGA_MOSI T21 PC0/NAND_WE/SPI0_MOSI
A64_FPGA_MISO K18 PC1/NAND_ALE/SDC2_DS/SPI0_MISO
A64_FPGA_SCLK R907 0R P20 PC2/NAND_CLE/SPI0_CLK
A64_FPGA_CS P19 PC3/NAND_CE1/SPI0_CS
T20 PC4/NAND_CE0
G20 PC5/NAND_RE/SDC2_CLK
K19 PC6/NAND_RB0/SDC2_CMD
T19 PC7/NAND_RB1
M21 PC8/NAND_DQ0/SDC2_D0
L19 PC9/NAND_DQ1/SDC2_D1
K20 PC10/NAND_DQ2/SDC2_D2
H20 PC11/NAND_DQ3/SDC2_D3
P18 PC12/NAND_DQ4/SDC2_D4
L20 PC13/NAND_DQ5/SDC2_D5
J21 PC14/NAND_DQ6/SDC2_D6
R21 PC15/NAND_DQ7/SDC2_D7
N20 PC16/NAND_DQS/SDC2_RST
A64
U501F

CONFIDENTIAL
David Shah
Sheet: /A64 SoC Subsystem/A64 FPGA I/F/
File: a64_fpga_if.sch

Title: openMixR 4k Headset Mainboard

Size: A3	Date: 2017-02-14	**Rev: 1.0**
KiCad E.D.A. kicad 4.0.5		Id: 9/19

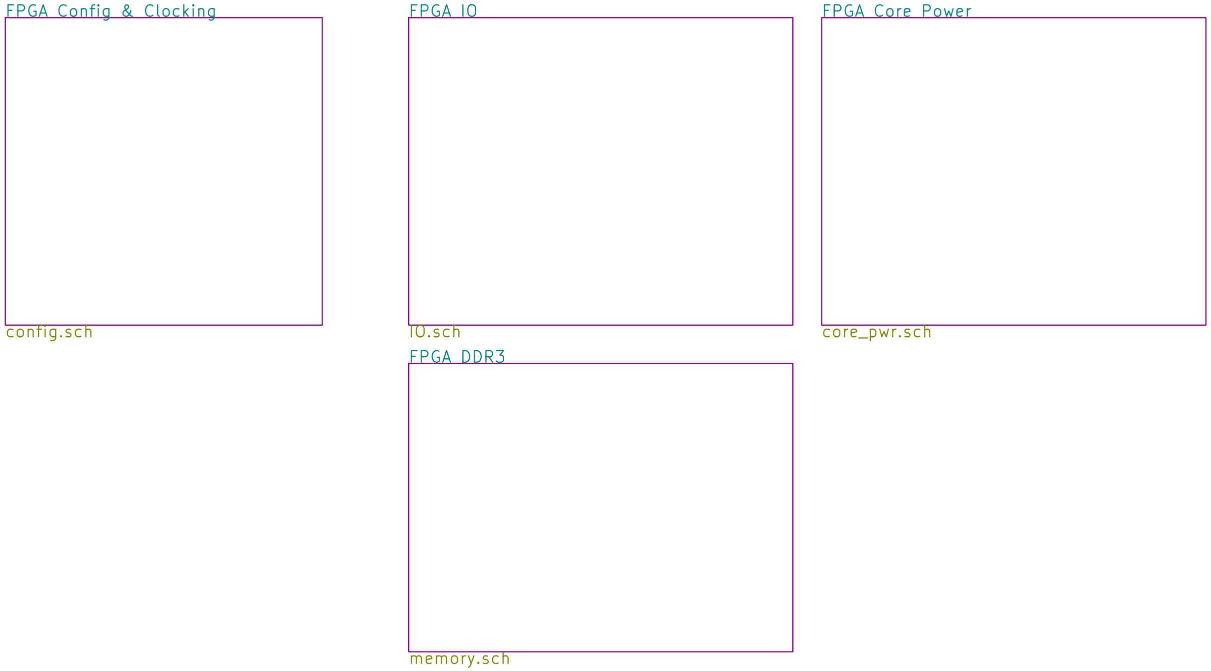
FPGA Config & Clocking
config.sch
FPGA IO
IO.sch
FPGA Core Power
core_pwr.sch
FPGA DDR3
memory.sch

CONFIDENTIAL

David Shah

Sheet: /Artix-7 FPGA Subsystem/
File: fpgasys.sch

Title: openMixR 4k Headset Mainboard

Size: A4
Date: 2017-02-14
Rev: 1.0
KiCad E.D.A. kicad 4.0.5
Id: 10/19

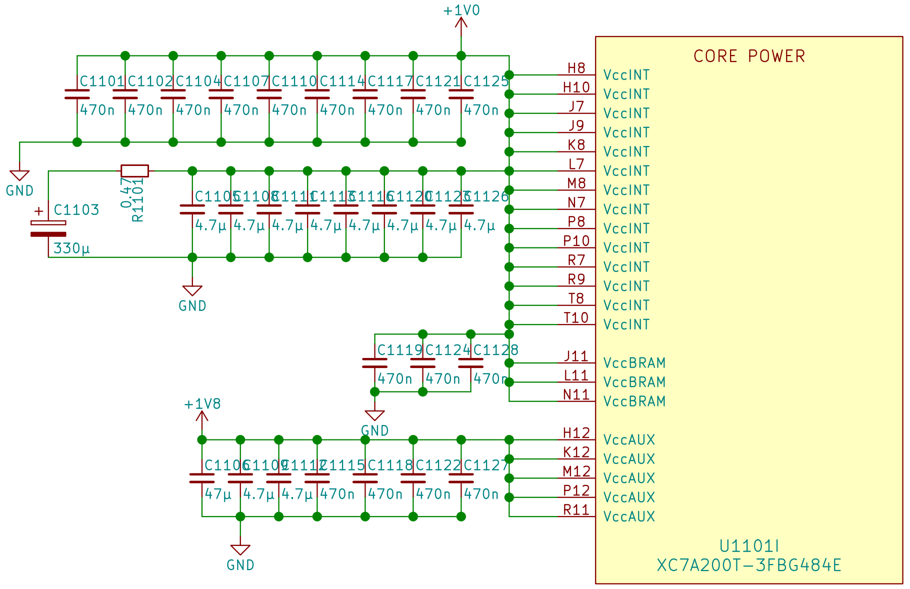
+1V0
CORE POWER
C1101
C1102
C1104
C1107
C1110
C1114
C1117
C1121
C1125
470n
GND
0.47
R1101
+
C1103
330µ
C1105
C1108
C1111
C1113
C1116
C1120
C1123
C1126
4.7µ
GND
C1119
C1124
C1128
470n
GND
+1V8
C1106
C1109
C1112
C1115
C1118
C1122
C1127
47µ
4.7µ
4.7µ
470n
470n
470n
470n
GND
H8
H10
J7
J9
K8
L7
M8
N7
P8
P10
R7
R9
T8
T10
VccINT
J11
L11
N11
VccBRAM
H12
K12
M12
P12
R11
VccAUX
U1101I
XC7A200T-3FBG484E

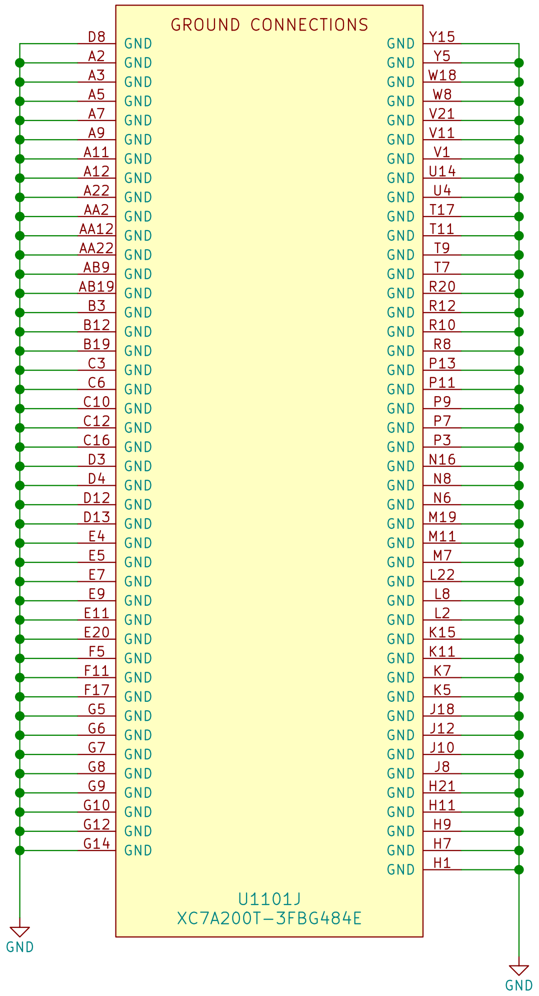
GROUND CONNECTIONS
D8
A2
A3
A5
A7
A9
A11
A12
A22
AA2
AA12
AA22
AB9
AB19
B3
B12
B19
C3
C6
C10
C12
C16
D3
D4
D12
D13
E4
E5
E7
E9
E11
E20
F5
F11
F17
G5
G6
G7
G8
G9
G10
G12
G14
Y15
Y5
W18
W8
V21
V11
V1
U14
U4
T17
T11
T9
T7
R20
R12
R10
R8
P13
P11
P9
P7
P3
N16
N8
N6
M19
M11
M7
L22
L8
L2
K15
K11
K7
K5
J18
J12
J10
J8
H21
H11
H9
H7
H1
GND
U1101J
XC7A200T-3FBG484E
GND
GND

CONFIDENTIAL
David Shah
Sheet: /Artix-7 FPGA Subsystem/FPGA Core Power/
File: core_pwr.sch

Title: openMixR 4k Headset Mainboard

Size: A3	Date: 2017-02-14	**Rev: 1.0**
KiCad E.D.A. kicad 4.0.5		Id: 11/19

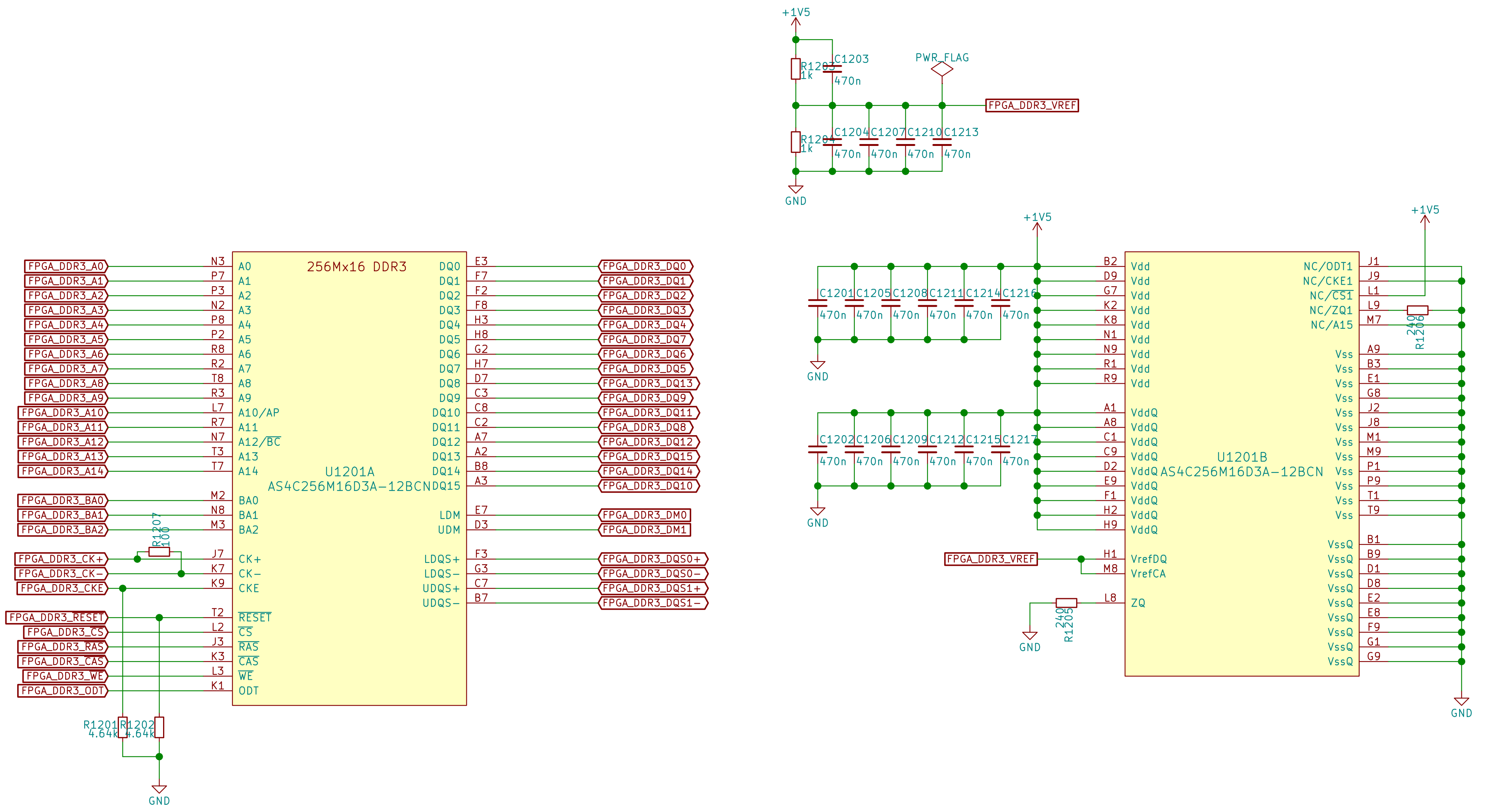
+1V5
R1203
1k
C1203
470n
PWR_FLAG
FPGA_DDR3_VREF
R1204
1k
C1204
C1207
C1210
C1213
470n
GND
256Mx16 DDR3
U1201A
AS4C256M16D3A-12BCN
FPGA_DDR3_A0
FPGA_DDR3_A1
FPGA_DDR3_A2
FPGA_DDR3_A3
FPGA_DDR3_A4
FPGA_DDR3_A5
FPGA_DDR3_A6
FPGA_DDR3_A7
FPGA_DDR3_A8
FPGA_DDR3_A9
FPGA_DDR3_A10
FPGA_DDR3_A11
FPGA_DDR3_A12
FPGA_DDR3_A13
FPGA_DDR3_A14
FPGA_DDR3_BA0
FPGA_DDR3_BA1
FPGA_DDR3_BA2
FPGA_DDR3_CK+
FPGA_DDR3_CK-
FPGA_DDR3_CKE
FPGA_DDR3_RESET
FPGA_DDR3_CS
FPGA_DDR3_RAS
FPGA_DDR3_CAS
FPGA_DDR3_WE
FPGA_DDR3_ODT
R1207
100
R1201
4.64k
R1202
4.64k
FPGA_DDR3_DQ0
FPGA_DDR3_DQ1
FPGA_DDR3_DQ2
FPGA_DDR3_DQ3
FPGA_DDR3_DQ4
FPGA_DDR3_DQ7
FPGA_DDR3_DQ6
FPGA_DDR3_DQ5
FPGA_DDR3_DQ13
FPGA_DDR3_DQ9
FPGA_DDR3_DQ11
FPGA_DDR3_DQ8
FPGA_DDR3_DQ12
FPGA_DDR3_DQ15
FPGA_DDR3_DQ14
FPGA_DDR3_DQ10
FPGA_DDR3_DM0
FPGA_DDR3_DM1
FPGA_DDR3_DQS0+
FPGA_DDR3_DQS0-
FPGA_DDR3_DQS1+
FPGA_DDR3_DQS1-
C1201
C1205
C1208
C1211
C1214
C1216
C1202
C1206
C1209
C1212
C1215
C1217
U1201B
AS4C256M16D3A-12BCN
Vdd
VddQ
VrefDQ
VrefCA
ZQ
NC/ODT1
NC/CKE1
NC/CS1
NC/ZQ1
NC/A15
Vss
VssQ
R1205
240
R1206
240

CONFIDENTIAL
David Shah
Sheet: /Artix-7 FPGA Subsystem/FPGA DDR3/
File: memory.sch

Title: openMixR 4k Headset Mainboard

Size: A3 | Date: 2017-02-14 | **Rev: 1.0**
KiCad E.D.A. kicad 4.0.5 | Id: 12/19

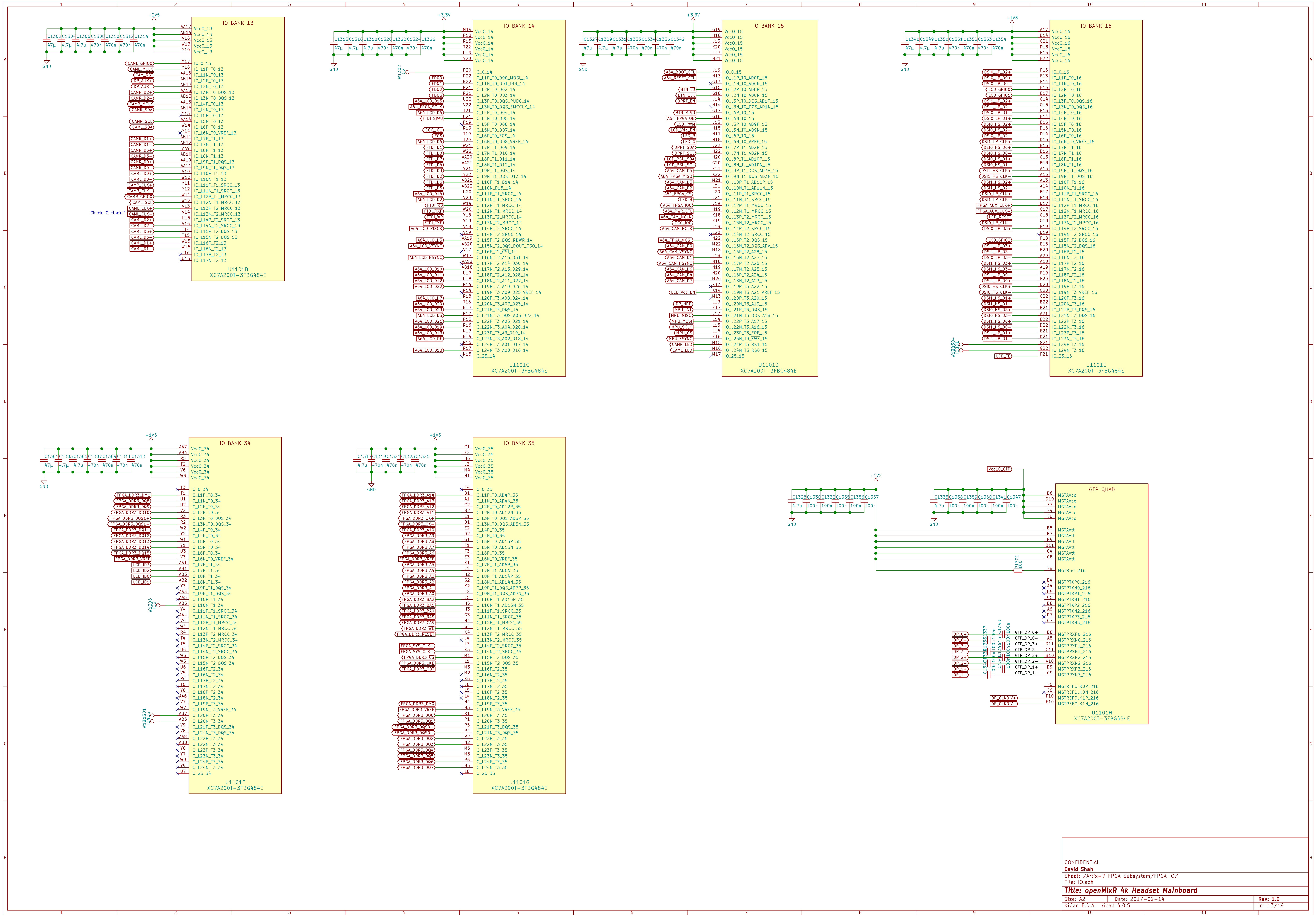
IO BANK 13
U1101B
XC7A200T-3FBG484E
+2V5
Check IO clocks!
IO BANK 14
U1101C
XC7A200T-3FBG484E
+3.3V
IO BANK 15
U1101D
XC7A200T-3FBG484E
IO BANK 16
U1101E
XC7A200T-3FBG484E
+1V8
IO BANK 34
U1101F
XC7A200T-3FBG484E
IO BANK 35
U1101G
XC7A200T-3FBG484E
+1V5
GTP QUAD
U1101H
XC7A200T-3FBG484E
+1V2
Vcc10_GTP
R1301
100
GND
47µ
4.7µ
470n
100n
MGTAVcc
MGTAVtt
MGTRref_216
DP_CLKDIV+
DP_CLKDIV-
LCD_TE

CONFIDENTIAL

David Shah

Sheet: /Artix-7 FPGA Subsystem/FPGA IO/

File: IO.sch

Title: openMixR 4k Headset Mainboard

Size: A2 | Date: 2017-02-14 | **Rev: 1.0**

KiCad E.D.A. kicad 4.0.5 | Id: 13/19

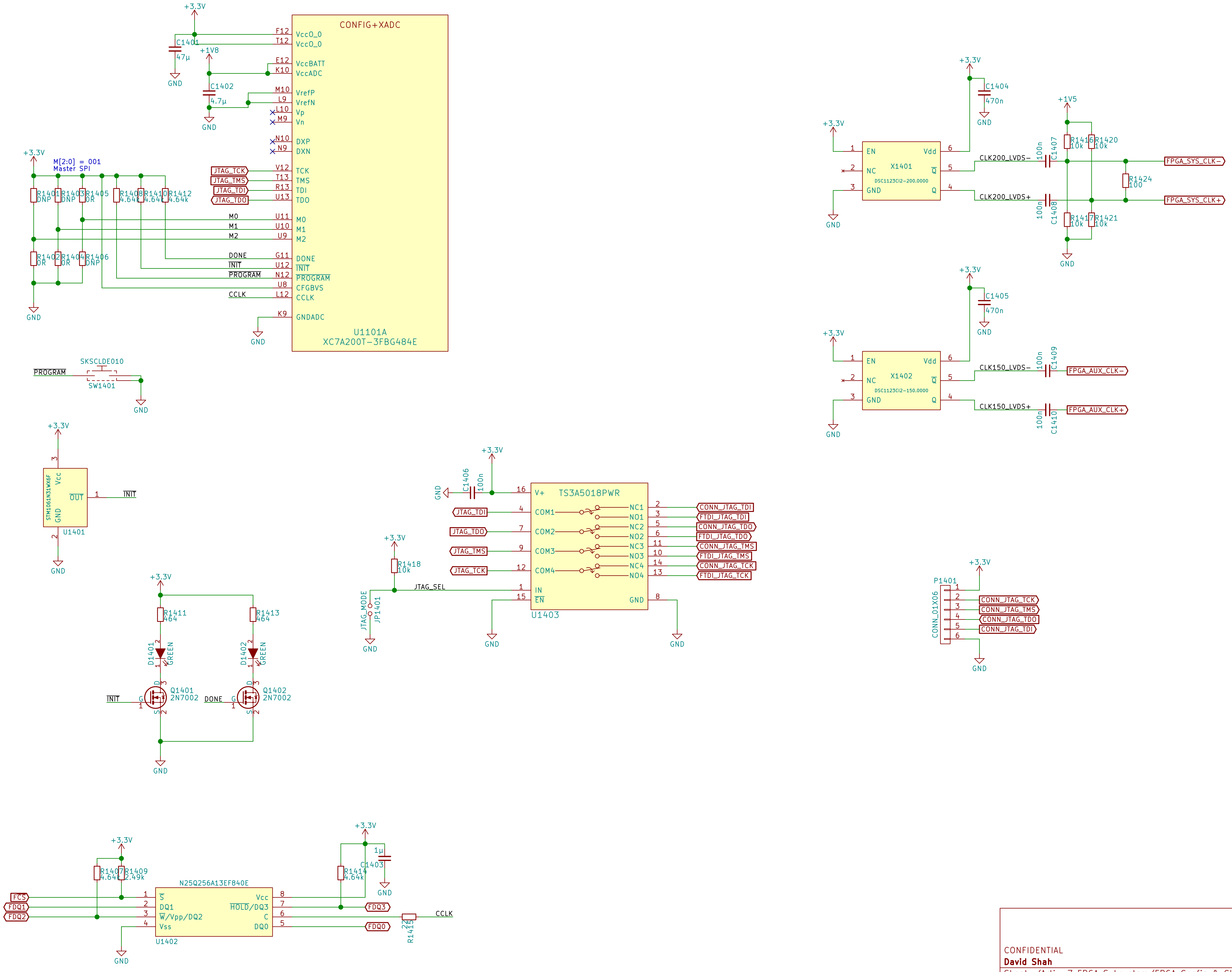
CONFIG+XADC
U1101A
XC7A200T-3FBG484E
+3.3V
C1401
47µ
+1V8
C1402
4.7µ
GND
F12 VccO_0
T12 VccO_0
E12 VccBATT
K10 VccADC
M10 VrefP
L9 VrefN
L10 Vp
M9 Vn
N10 DXP
N9 DXN
JTAG_TCK V12 TCK
JTAG_TMS T13 TMS
JTAG_TDI R13 TDI
JTAG_TDO U13 TDO
M0 U11 M0
M1 U10 M1
M2 U9 M2
DONE G11 DONE
INIT U12 INIT
PROGRAM N12 PROGRAM
U8 CFGBVS
CCLK L12 CCLK
K9 GNDADC
M[2:0] = 001
Master SPI
R1401 DNP
R1403 DNP
R1405 0R
R1408 4.64k
R1410 4.64k
R1412 4.64k
R1402 0R
R1404 0R
R1406 DNP
SKSCLDE010
SW1401
PROGRAM
STM1061N31WX6F
Vcc
OUT
GND
U1401
INIT
R1411 464
R1413 464
D1401 GREEN
D1402 GREEN
Q1401 2N7002
Q1402 2N7002
INIT
DONE
G D S
N25Q256A13EF840E
U1402
S
DQ1
W/Vpp/DQ2
Vss
Vcc
HOLD/DQ3
C
DQ0
FCS
FDQ1
FDQ2
FDQ3
FDQ0
R1407 4.64k
R1409 2.49k
R1414 4.64k
C1403 1µ
R1415 24
CCLK
TS3A5018PWR
U1403
C1406 100n
V+
COM1
COM2
COM3
COM4
IN
EN
GND
NC1 NO1 NC2 NO2 NC3 NO3 NC4 NO4
CONN_JTAG_TDI
FTDI_JTAG_TDI
CONN_JTAG_TDO
FTDI_JTAG_TDO
CONN_JTAG_TMS
FTDI_JTAG_TMS
CONN_JTAG_TCK
FTDI_JTAG_TCK
JTAG_TDI
JTAG_TDO
JTAG_TMS
JTAG_TCK
R1418 10k
JTAG_SEL
JTAG_MODE
JP1401
X1401
DSC1123CI2-200.0000
EN NC GND Vdd Q Q
C1404 470n
+1V5
R1416 10k
R1420 10k
R1417 10k
R1421 10k
R1424 100
C1407 100n
C1408 100n
CLK200_LVDS-
CLK200_LVDS+
FPGA_SYS_CLK-
FPGA_SYS_CLK+
X1402
DSC1123CI2-150.0000
C1405 470n
C1409 100n
C1410 100n
CLK150_LVDS-
CLK150_LVDS+
FPGA_AUX_CLK-
FPGA_AUX_CLK+
P1401
CONN_01X06
CONN_JTAG_TCK
CONN_JTAG_TMS
CONN_JTAG_TDO
CONN_JTAG_TDI

CONFIDENTIAL
David Shah
Sheet: /Artix-7 FPGA Subsystem/FPGA Config & Clocking/
File: config.sch
Title: openMixR 4k Headset Mainboard
Size: A3
Date: 2017-02-14
Rev: 1.0
KiCad E.D.A. kicad 4.0.5
Id: 14/19

SEQUENCE
1.0V core
1.8V aux + 1.0V GTP
3.3V IO + 1.2V cam+GTP

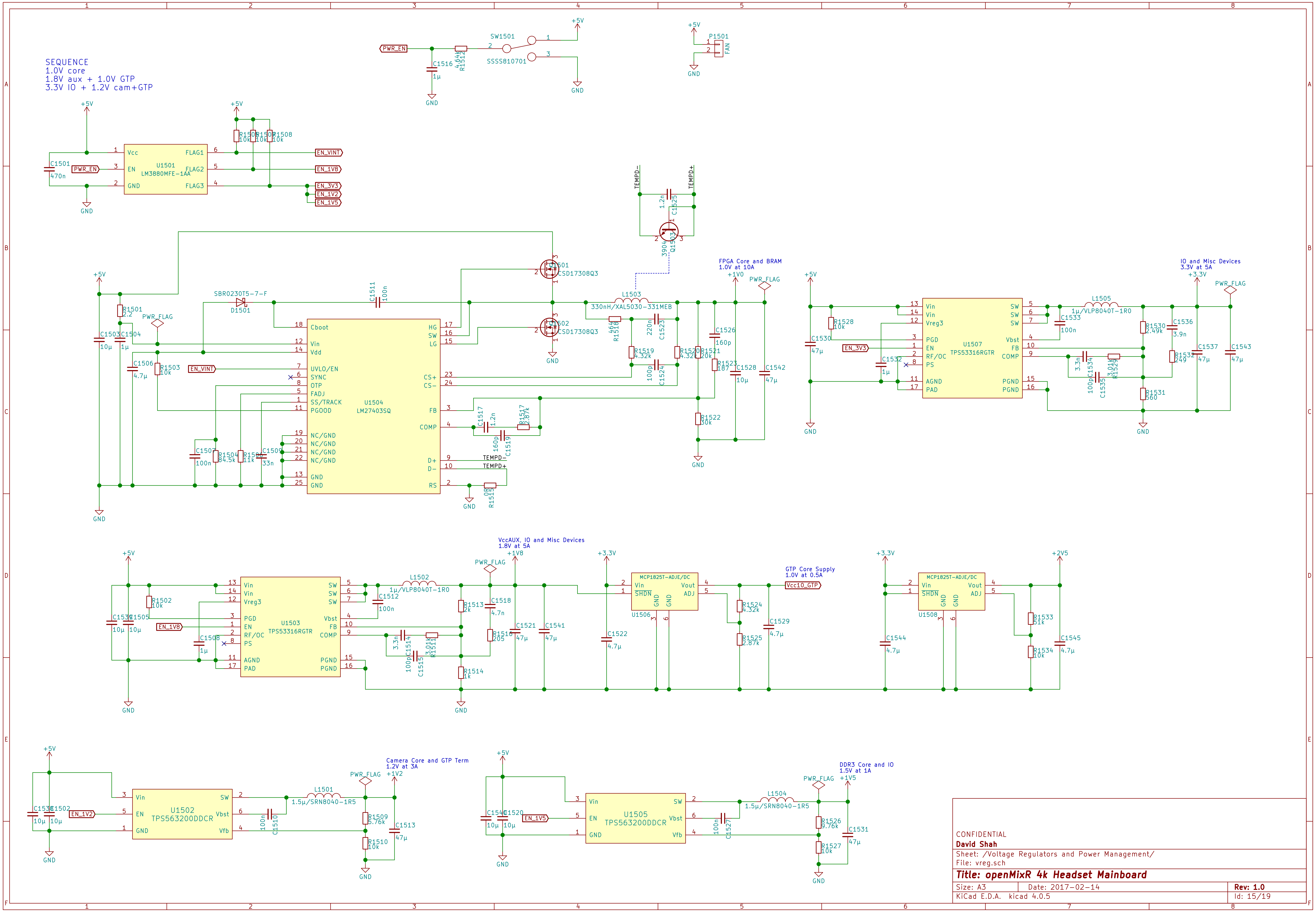
PWR_EN
C1516
1µ
R1512
464k
SW1501
SSSS810701
+5V
GND
P1501
FAN
U1501
LM3880MFE-1AA
Vcc
EN
GND
FLAG1
FLAG2
FLAG3
C1501
470n
R1506
R1507
R1508
10k
EN_VINT
EN_1V8
EN_3V3
EN_1V2
EN_1V5
TEMPD-
TEMPD+
C1525
1.2n
Q1503
3904
Q1501
Q1502
CSD17308Q3
SBR0230T5-7-F
D1501
C1511
100n
L1503
330nH/XAL5030-331MEB
R1501
2.2
PWR_FLAG
C1503
10µ
C1504
1µ
C1506
4.7µ
R1503
10k
U1504
LM27403SQ
Cboot
Vin
Vdd
UVLO/EN
SYNC
OTP
FADJ
SS/TRACK
PGOOD
NC/GND
HG
SW
LG
CS+
CS-
FB
COMP
D+
D-
RS
C1507
100n
R1504
84.5k
R1505
11k
C1509
33n
C1517
1.2n
R1517
2.87k
C1519
160p
R1515
0R
R1518
464
C1523
220n
C1524
100p
R1519
4.32k
R1520
4.32k
R1521
20k
R1522
30k
R1523
187
C1526
160p
C1528
10µ
C1542
47µ
FPGA Core and BRAM
1.0V at 10A
+1V0
U1507
TPS53316RGTR
Vin
Vreg3
PGD
EN
RF/OC
PS
AGND
PAD
SW
Vbst
FB
COMP
PGND
R1528
10k
C1530
47µ
C1532
1µ
C1533
100n
L1505
1µ/VLP8040T-1R0
C1534
3.3n
C1535
100p
R1529
3.01k
R1530
2.49k
R1531
560
R1532
249
C1536
3.9n
C1537
47µ
C1543
47µ
IO and Misc Devices
3.3V at 5A
+3.3V
U1503
TPS53316RGTR
R1502
10k
C1539
10µ
C1505
10µ
C1508
1µ
C1512
100n
L1502
1µ/VLP8040T-1R0
C1514
3.3n
C1515
100p
R1511
3.01k
R1513
2k
R1516
205
R1514
1k
C1518
4.7n
C1521
47µ
C1541
47µ
VccAUX, IO and Misc Devices
1.8V at 5A
+1V8
U1506
MCP1825T-ADJE/DC
SHDN
Vout
ADJ
C1522
4.7µ
R1524
4.32k
R1525
2.87k
C1529
4.7µ
GTP Core Supply
1.0V at 0.5A
Vcc10_GTP
U1508
MCP1825T-ADJE/DC
+2V5
C1544
4.7µ
R1533
51k
R1534
10k
C1545
4.7µ
U1502
TPS563200DDCR
Vfb
C1538
10µ
C1502
10µ
C1510
100n
L1501
1.5µ/SRN8040-1R5
R1509
5.76k
R1510
10k
C1513
47µ
Camera Core and GTP Term
1.2V at 3A
+1V2
U1505
TPS563200DDCR
C1540
10µ
C1520
10µ
C1527
100n
L1504
1.5µ/SRN8040-1R5
R1526
9.76k
R1527
10k
C1531
47µ
DDR3 Core and IO
1.5V at 1A
+1V5

CONFIDENTIAL
David Shah
Sheet: /Voltage Regulators and Power Management/
File: vreg.sch
Title: openMixR 4k Headset Mainboard
Size: A3 Date: 2017-02-14 **Rev: 1.0**
KiCad E.D.A. kicad 4.0.5 Id: 15/19

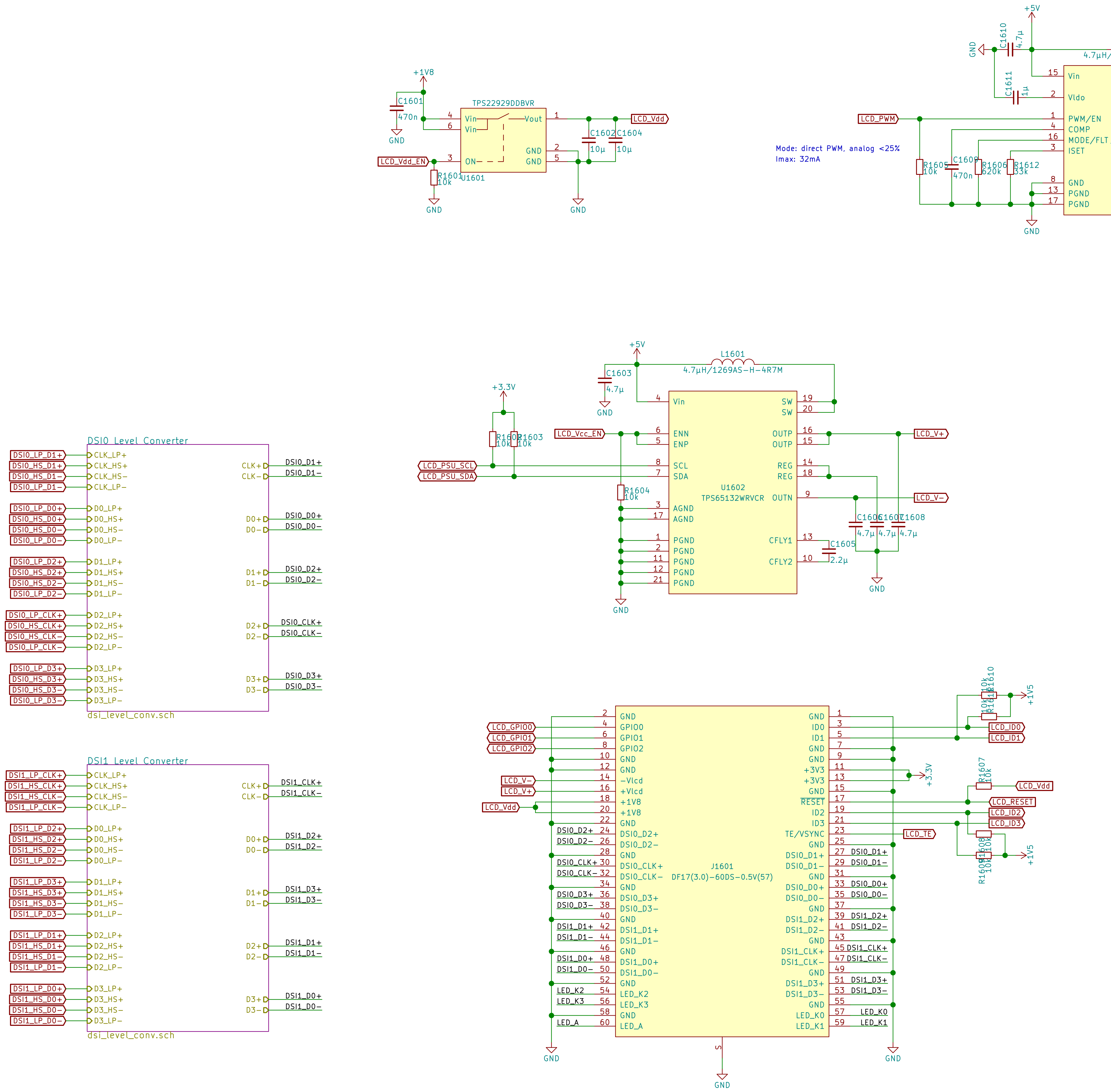
+1V8
C1601
470n
GND
TPS22929DDBVR
Vin
Vin
Vout
ON
GND
GND
U1601
R1601
10k
LCD_Vdd_EN
LCD_Vdd
C1602
10µ
C1604
10µ
+5V
C1610
4.7µ
L1602
4.7µH/1269AS-H-4R7M
D1601
MBR0540
C1612
4.7µ
LED_A
R1613
100k
Vovp: 33V
R1614
4.64k
C1611
1µ
Vin
Vldo
PWM/EN
COMP
MODE/FLT
ISET
GND
PGND
PGND
SW
OVP
IFB1
IFB2
IFB3
IFB4
IFB5
IFB6
U1603
TPS61176RTER
LED_K0
LED_K1
LED_K2
LED_K3
LCD_PWM
R1605
10k
C1609
470n
R1606
620k
R1612
33k
Mode: direct PWM, analog <25%
Imax: 32mA
L1601
4.7µH/1269AS-H-4R7M
C1603
4.7µ
+3.3V
R1602
10k
R1603
10k
LCD_Vcc_EN
LCD_PSU_SCL
LCD_PSU_SDA
R1604
10k
Vin
ENN
ENP
SCL
SDA
AGND
AGND
PGND
PGND
PGND
PGND
PGND
SW
SW
OUTP
OUTP
REG
REG
OUTN
CFLY1
CFLY2
U1602
TPS65132WRVCR
LCD_V+
LCD_V-
C1606
4.7µ
C1607
4.7µ
C1608
4.7µ
C1605
2.2µ
DSI0 Level Converter
dsi_level_conv.sch
DSI0_LP_D1+
DSI0_HS_D1+
DSI0_HS_D1-
DSI0_LP_D1-
DSI0_LP_D0+
DSI0_HS_D0+
DSI0_HS_D0-
DSI0_LP_D0-
DSI0_LP_D2+
DSI0_HS_D2+
DSI0_HS_D2-
DSI0_LP_D2-
DSI0_LP_CLK+
DSI0_HS_CLK+
DSI0_HS_CLK-
DSI0_LP_CLK-
DSI0_LP_D3+
DSI0_HS_D3+
DSI0_HS_D3-
DSI0_LP_D3-
CLK_LP+
CLK_HS+
CLK_HS-
CLK_LP-
D0_LP+
D0_HS+
D0_HS-
D0_LP-
D1_LP+
D1_HS+
D1_HS-
D1_LP-
D2_LP+
D2_HS+
D2_HS-
D2_LP-
D3_LP+
D3_HS+
D3_HS-
D3_LP-
CLK+
CLK-
D0+
D0-
D1+
D1-
D2+
D2-
D3+
D3-
DSI0_D1+
DSI0_D1-
DSI0_D0+
DSI0_D0-
DSI0_D2+
DSI0_D2-
DSI0_CLK+
DSI0_CLK-
DSI0_D3+
DSI0_D3-
DSI1 Level Converter
dsi_level_conv.sch
DSI1_LP_CLK+
DSI1_HS_CLK+
DSI1_HS_CLK-
DSI1_LP_CLK-
DSI1_LP_D2+
DSI1_HS_D2+
DSI1_HS_D2-
DSI1_LP_D2-
DSI1_LP_D3+
DSI1_HS_D3+
DSI1_HS_D3-
DSI1_LP_D3-
DSI1_LP_D1+
DSI1_HS_D1+
DSI1_HS_D1-
DSI1_LP_D1-
DSI1_LP_D0+
DSI1_HS_D0+
DSI1_HS_D0-
DSI1_LP_D0-
DSI1_CLK+
DSI1_CLK-
DSI1_D2+
DSI1_D2-
DSI1_D3+
DSI1_D3-
DSI1_D1+
DSI1_D1-
DSI1_D0+
DSI1_D0-
J1601
DF17(3.0)-60DS-0.5V(57)
LCD_GPIO0
LCD_GPIO1
LCD_GPIO2
GND
GPIO0
GPIO1
GPIO2
-Vlcd
+Vlcd
+1V8
+1V8
DSI0_D2+
DSI0_D2-
DSI0_CLK+
DSI0_CLK-
DSI0_D3+
DSI0_D3-
DSI1_D1+
DSI1_D1-
DSI1_D0+
DSI1_D0-
LED_K2
LED_K3
LED_A
ID0
ID1
+3V3
+3V3
RESET
ID2
ID3
TE/VSYNC
DSI0_D1+
DSI0_D1-
DSI0_D0+
DSI0_D0-
DSI1_D2+
DSI1_D2-
DSI1_CLK+
DSI1_CLK-
DSI1_D3+
DSI1_D3-
LED_K0
LED_K1
S
R1610
10k
R1611
10k
+1V5
LCD_ID0
LCD_ID1
R1607
10k
LCD_RESET
LCD_ID2
LCD_ID3
LCD_TE
R1608
10k
R1609
10k
+1V5

CONFIDENTIAL

David Shah

Sheet: /LCD/

File: display.sch

Title: openMixR 4k Headset Mainboard

Size: A3 Date: 2017-02-14 **Rev: 1.0**

KiCad E.D.A. kicad 4.0.5 Id: 16/19

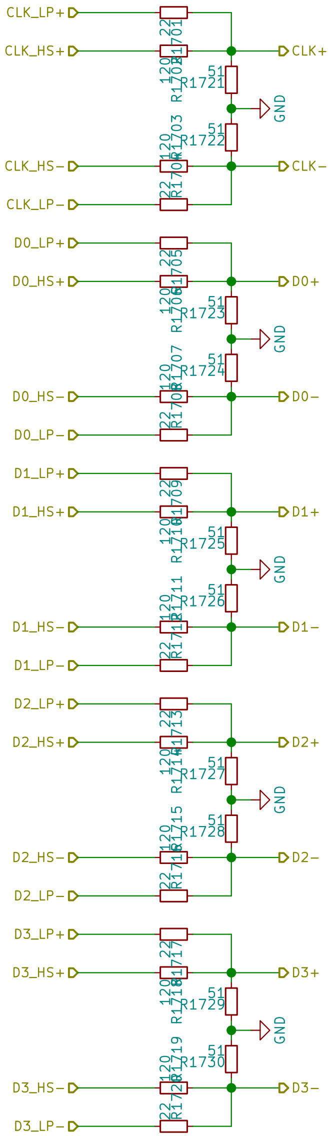
CLK_LP+
CLK_HS+
CLK+
22
R1701
120
51
R1721
GND
51
R1722
120
R1703
CLK_HS−
CLK−
22
CLK_LP−
D0_LP+
D0_HS+
D0+
22
R1705
120
51
R1723
GND
51
R1724
120
R1707
D0_HS−
D0−
22
D0_LP−
D1_LP+
D1_HS+
D1+
22
R1709
120
51
R1725
GND
51
R1726
120
R1711
D1_HS−
D1−
22
D1_LP−
D2_LP+
D2_HS+
D2+
22
R1713
120
51
R1727
GND
51
R1728
120
R1715
D2_HS−
D2−
22
D2_LP−
D3_LP+
D3_HS+
D3+
22
R1717
120
51
R1729
GND
51
R1730
120
R1719
D3_HS−
D3−
22
D3_LP−

CONFIDENTIAL

David Shah

Sheet: /LCD/DSI0 Level Converter/
File: dsi_level_conv.sch

Title: openMixR 4k Headset Mainboard

Size: A4	Date: 2017-02-14	**Rev: 1.0**
KiCad E.D.A. kicad 4.0.5		Id: 17/19

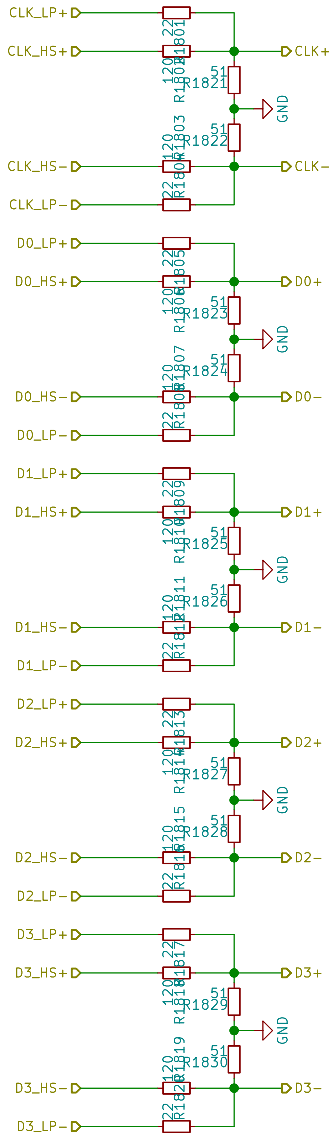
CLK_LP+
CLK_HS+
CLK+
R1801
22
R1802
120
R1821
51
GND
R1822
51
R1803
120
CLK_HS−
CLK−
R1804
22
CLK_LP−
D0_LP+
D0_HS+
D0+
R1805
22
R1806
120
R1823
51
GND
R1824
51
R1807
120
D0_HS−
D0−
R1808
22
D0_LP−
D1_LP+
D1_HS+
D1+
R1809
22
R1810
120
R1825
51
GND
R1826
51
R1811
120
D1_HS−
D1−
R1812
22
D1_LP−
D2_LP+
D2_HS+
D2+
R1813
22
R1814
120
R1827
51
GND
R1828
51
R1815
120
D2_HS−
D2−
R1816
22
D2_LP−
D3_LP+
D3_HS+
D3+
R1817
22
R1818
120
R1829
51
GND
R1830
51
R1819
120
D3_HS−
D3−
R1820
22
D3_LP−

CONFIDENTIAL

David Shah

Sheet: /LCD/DSI1 Level Converter/
File: dsi_level_conv.sch

Title: openMixR 4k Headset Mainboard

Size: A4 Date: 2017-02-14 **Rev: 1.0**
KiCad E.D.A. kicad 4.0.5 Id: 18/19

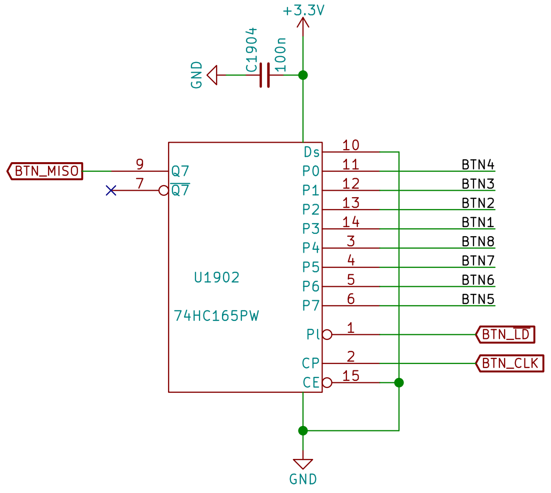
+3.3V
GND
C1904
100n
BTN_MISO
9
7
Q7
Q7
U1902
74HC165PW
Ds
P0
P1
P2
P3
P4
P5
P6
P7
PL
CP
CE
10
11
12
13
14
3
4
5
6
1
2
15
BTN4
BTN3
BTN2
BTN1
BTN8
BTN7
BTN6
BTN5
BTN_LD
BTN_CLK
GND

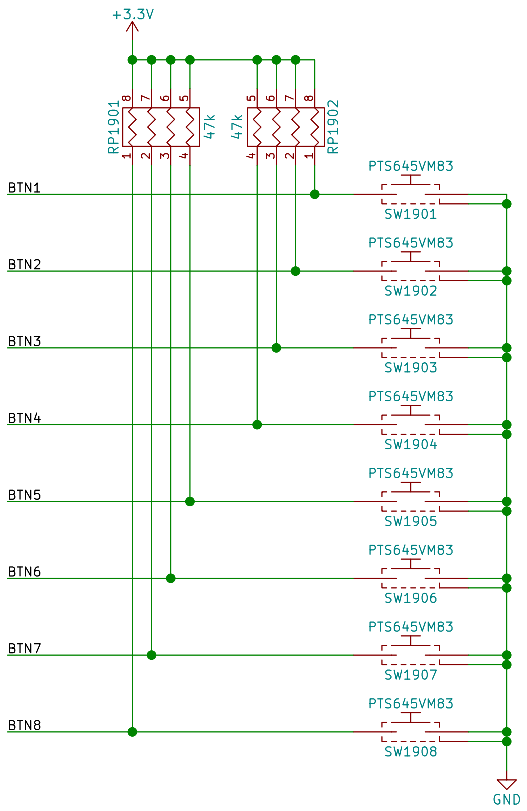
+3.3V
RP1901
47k
8
7
6
5
1
2
3
4
5
6
7
8
47k
4
3
2
1
RP1902
BTN1
BTN2
BTN3
BTN4
BTN5
BTN6
BTN7
BTN8
PTS645VM83
SW1901
PTS645VM83
SW1902
PTS645VM83
SW1903
PTS645VM83
SW1904
PTS645VM83
SW1905
PTS645VM83
SW1906
PTS645VM83
SW1907
PTS645VM83
SW1908
GND

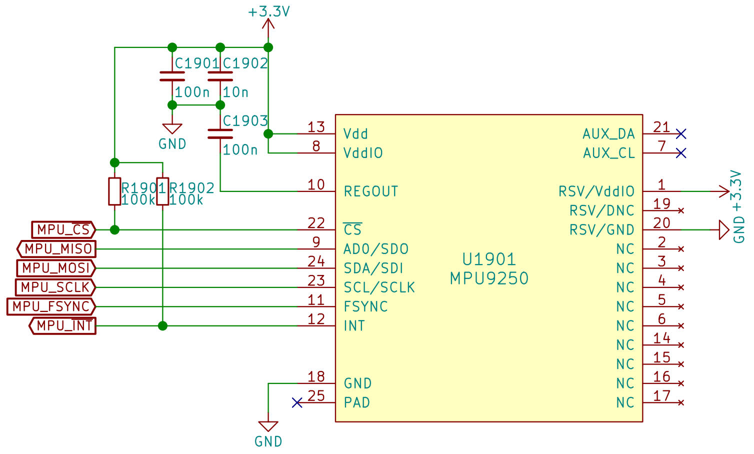
+3.3V
C1901
100n
C1902
10n
GND
C1903
100n
R1901
100k
R1902
100k
MPU_CS
MPU_MISO
MPU_MOSI
MPU_SCLK
MPU_FSYNC
MPU_INT
13
8
10
22
9
24
23
11
12
18
25
Vdd
VddIO
REGOUT
CS
AD0/SDO
SDA/SDI
SCL/SCLK
FSYNC
INT
GND
PAD
U1901
MPU9250
AUX_DA
AUX_CL
RSV/VddIO
RSV/DNC
RSV/GND
NC
NC
NC
NC
NC
NC
NC
NC
NC
NC
21
7
1
19
20
2
3
4
5
6
14
15
16
17
+3.3V
GND
GND

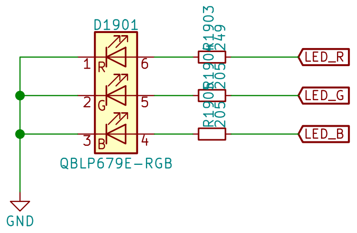
D1901
1
2
3
R
G
B
6
5
4
QBLP679E-RGB
R1903
249
R190
205
R190
205
LED_R
LED_G
LED_B
GND

CONFIDENTIAL

David Shah

Sheet: /Sensors and UI/

File: sensors.sch

Title: openMixR 4k Headset Mainboard

Size: A3	Date: 2017-02-14	**Rev: 1.0**
KiCad E.D.A. kicad 4.0.5		Id: 19/19