RevNo	Revision note	Date	Signature	Checked

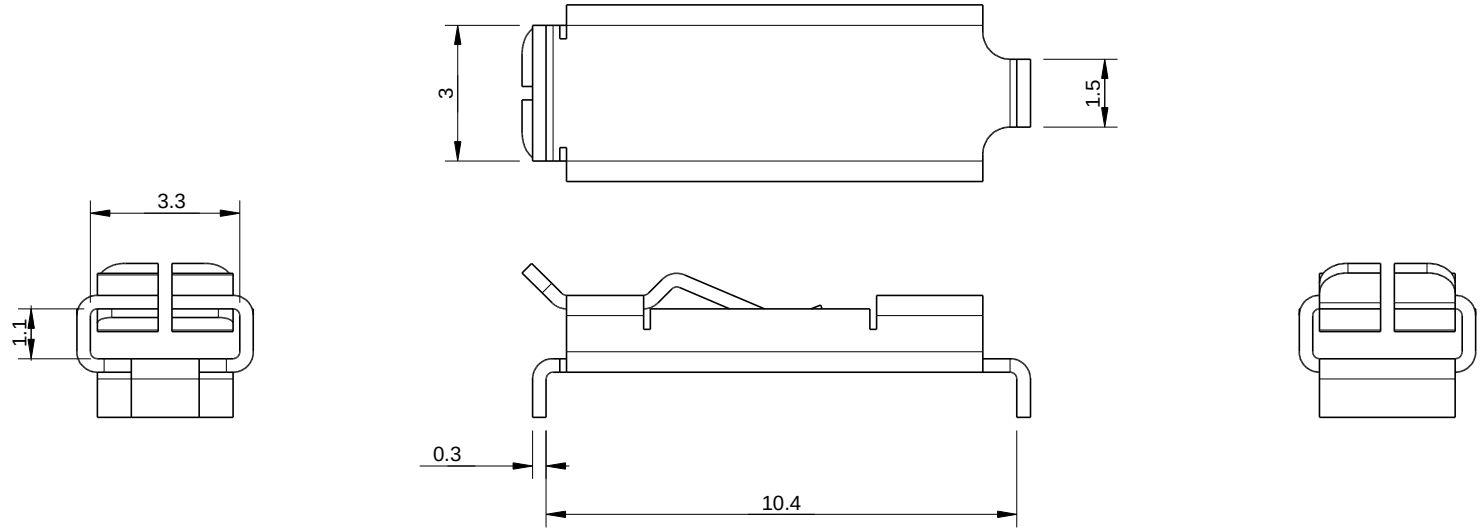

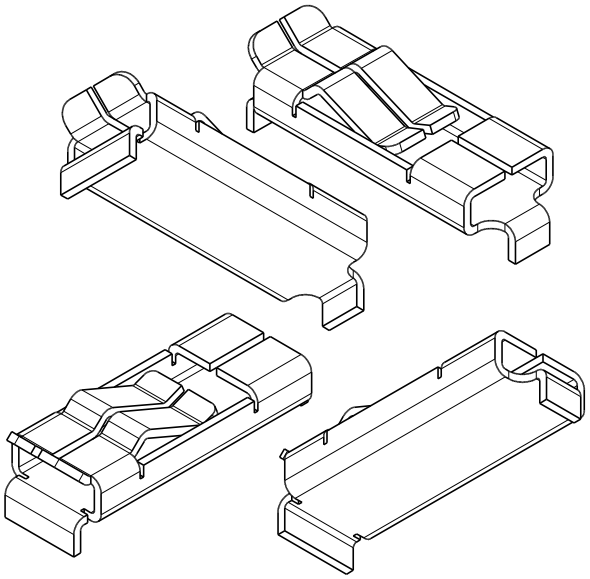

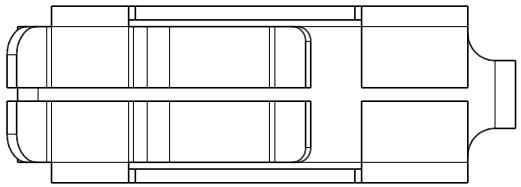

Itemref	Quantity	Title/Name, designation, material, dimension etc			Article No./Reference	
Drawn by		Checked by	Approved by - date	File name	Date	Scale
					Edition	Sheet