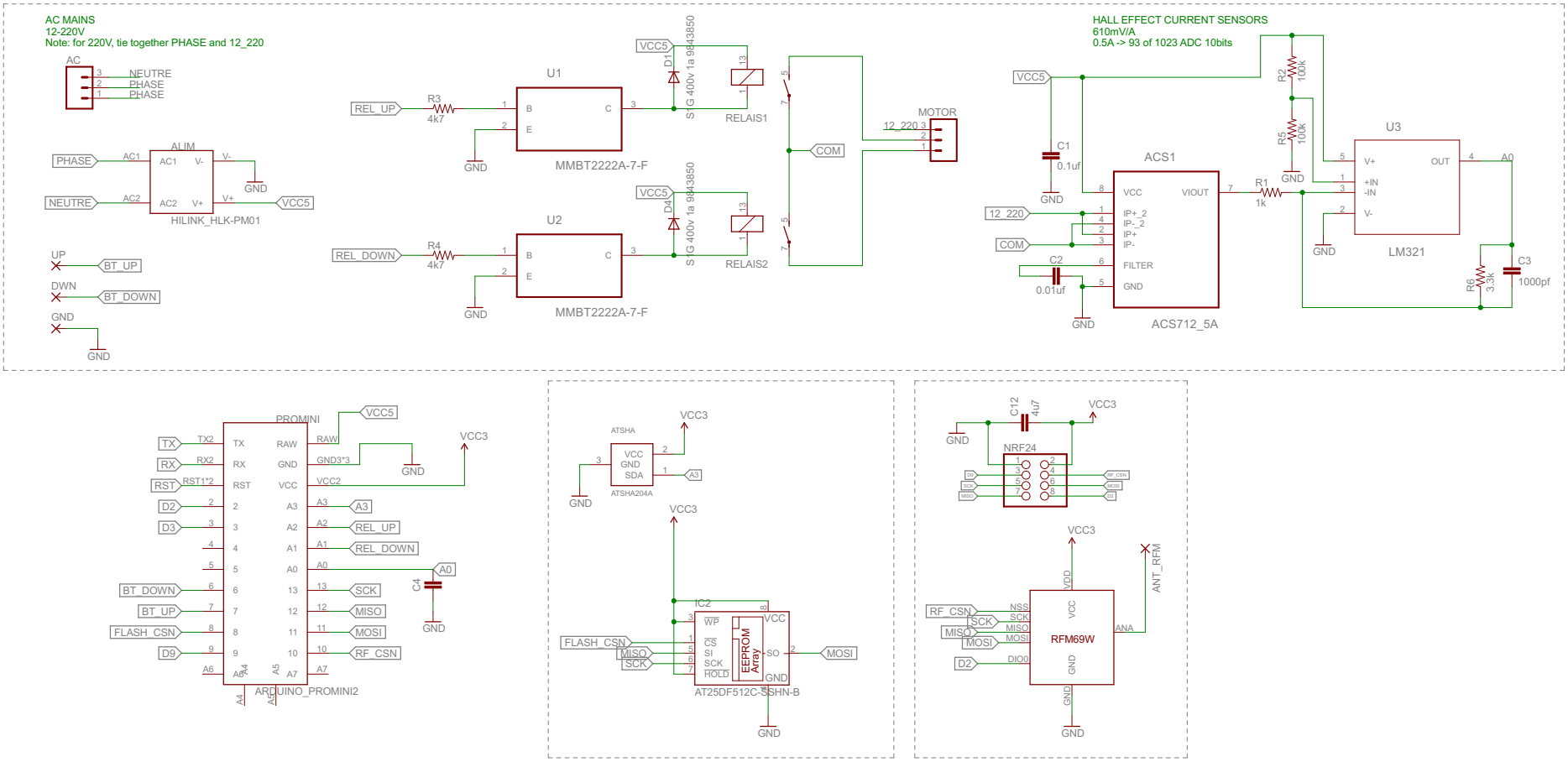
AC MAINS
12-220V
Note: for 220V, tie together PHASE and 12_220
AC
NEUTRE
PHASE
PHASE
ALIM
HILINK_HLK-PM01
PHASE
NEUTRE
GND
VCC5
UP
DWN
GND
BT_UP
BT_DOWN
U1
U2
MMBT2222A-7-F
REL_UP
REL_DOWN
R3
R4
4k7
D1
D4
S1G 400v 1a 9843850
RELAIS1
RELAIS2
COM
MOTOR
12_220
HALL EFFECT CURRENT SENSORS
610mV/A
0.5A -> 93 of 1023 ADC 10bits
C1
0.1uf
C2
0.01uf
ACS1
ACS712_5A
R1
1k
R2
100k
R5
100k
U3
LM321
A0
R6
3.3k
C3
1000pf
PROMINI
ARDUINO_PROMINI2
TX
RX
RST
D2
D3
D9
BT_DOWN
BT_UP
FLASH_CSN
RAW
GND3*3
VCC2
A3
REL_UP
REL_DOWN
SCK
MISO
MOSI
RF_CSN
C4
VCC3
ATSHA
ATSHA204A
SDA
IC2
AT25DF512C-SSHN-B
EEPROM Array
NRF24
C12
4u7
RFM69W
ANT_RFM
ANA
DIO0
VDD