Reactor Core Physics Design and Operating Data for Cycles 1 and 2 of the Zion Unit 2 PWR Power Plant

EPRI NP-1232
Project 519-6
Final Report
December 1979

Keywords:
Reactor Plant Operating Data
Reactor State-Point Data
PWR Reactor History
PWR Core Design Data

Reactor Core Physics Design and Operating Data for Cycles 1 and 2 of the Zion Unit 2 PWR Power Plant

NP-1232
Research Project 519-6

Final Report, December 1979

Prepared by

CARNEGIE-MELLON UNIVERSITY
Nuclear Science and Engineering Division
Schenley Park
Pittsburgh, Pennsylvania 15213

Principal Investigators
Albert J. Impink, Jr.
B. Alan Guthrie III

Prepared for

Electric Power Research Institute
3412 Hillview Avenue
Palo Alto, California 94304

EPRI Project Manager
Walter J. Eich
Nuclear Power Division

EPRI PERSPECTIVE

PROJECT DESCRIPTION

After or during the process of methodology development, validation or qualification of nuclear reactor core analysis requires benchmarking. Usually, various physics code modules in a sequence can be "independently" validated, e.g., against criticals or isotopics or even higher-order calculations. Integral validation of the core analysis methodology, however, requires the prior availability of a carefully defined set of design and operational data such as is documented in this report. Thus, the practical data for the pressurized water reactor (PWR) Zion Station Unit 2 contained herein could be of interest to utility engineers involved in operational PWR core modeling as well as to academic, industry, and government consultants engaged in various aspects of PWR core physics analysis.

PROJECT OBJECTIVE

This report completes the data base required for the analysis of specialized experimental information developed from a previous EPRI project (EPRI NP-509) that summarized measurements related to the core power distribution of Zion Station Unit 2 at the end of the first cycle of operation.

PROJECT RESULTS

Other multi-cycle PWR data have been summarized in EPRI reports NP-827 and NP-79-2-LD. Corresponding information for one cycle of a boiling water reactor (BWR) has been summarized in EPRI NP-562. EPRI NP-511 contains power distribution information equivalent to that in EPRI NP-509 but for the subject BWR of EPRI NP-562. Other measurements and related intercomparisons for data from this same BWR are presented in EPRI documents NP-540 and NP-561.

Walter Eich, Project Manager
Nuclear Power Division

ABSTRACT

This report contains a set of design and operating data relevant to Cycles 1 and 2 of the Zion Station Unit 2 pressurized water reactor (PWR). In general, these data constitute a substantial enhancement of fundamental information potentially usable in the process of validating PWR core analysis methodology. In particular, these data constitute the basis required for analysis that would allow specific comparisons with the results of gamma scans of selected assemblies at various axial positions measured after Cycle 1. These gamma scans are reflective of the local power history prior to measurement.

The design data collected herein is limited to the nuclear aspects of the core; thermal, hydraulic, and structural properties are summarized only insofar as they would be required for a nuclear analysis. The operational data includes core physics parameters measured at the startups of Cycles 1 and 2 as well as the operating history over almost a four-year period. Measurements related both to the core power distribution as well as to core responses during certain maneuvers are included.

ACKNOWLEDGMENT

Collection of the data compiled in this report was greatly facilitated by the co-operation and assistance rendered by members of the Nuclear Fuels Services group in the main office and the Technical Staff at the Zion Nuclear Station of the Commonwealth Edison Company. William F. Naughton and William J. Dean of the host utility provided liaison between Carnegie-Mellon and Commonwealth Edison personnel and served as reviewers during the on-site data collection activities.

TABLE OF CONTENTS

1.0 INTRODUCTION

2.0 Nuclear Design Parameters for Zion Unit 2, Cycles 1 and 2

2.1 Thermodynamic and Thermofluids Characteristics (in tabular form)

2.2 PWR Core and Component Description (in tabular form)

Item 1.0 Reactor

Item 2.0 Fuel Assembly Detail

Item 3.0 Fuel Rod Detail

Item 4.0 Rod Cluster Control Assembly Insert Detail

Item 5.0 Thimble Plugging Assembly Insert Detail

Item 6.0 Burnable Poison Assembly Insert Detail

Item 7.0 Source Bearing Assembly Insert Detail

Item 8.0 Top Reflector Details

Item 9.0 Bottom Reflector Details

Item 10.0 Radial Reflector Details

2.3 Average Assembly Fuel Loadings (in tabular form)

Item 1.0 Cycle 1

1.1 Region 1

1.2 Region 2

1.3 Region 3

Item 2.0 Cycle 2

2.1 Region 1

2.2 Region 2

2.3 Region 3

2.4 Region 4

3.0 Operating Characteristics of Zion Unit 2

3.1 Measured Core Physics Parameters

3.1.1 Cycle 1 Startup Measurements

3.1.1.1 Differential and Integral Control Rod Bank Worths

3.1.1.2 Boron Endpoints and Differential Boron Worths

3.1.1.3 Differential Isothermal Temperature Coefficient

3.1.1.4 Differential Power Coefficients

3.1.2 Cycle 2 Startup Measurements

3.1.2.1 Differential and Integral Control Rod Bank Worths

3.1.2.2 Boron Endpoints and Differential Boron Worths

3.1.2.3 Differential Isothermal Temperature Coefficients at Zero Power

3.1.2.4 Differential Moderator Temperature Coefficients at Operating Power Levels

3.1.2.5 Differential Doppler-Only Power Coefficients

3.2 Operating History

3.3 Core Power Distributions

3.3.1 Description of the Full Core "Flux Maps"

3.3.2 Summary of Full Core Flux Map Results

3.3.3 Detailed Listings of Adjusted Movable Detector Response Traces

3.4 Special Operational Tests

3.4.1 Load Follow Tests

3.4.2 Axial Xenon Stability Test

LIST OF TABLES

2.0 Abbreviations Used in Identifying Sources of Information Listed in Tables 2.1, 2.2 and 2.3

2.1 Thermodynamic and Thermofluids Characteristics

2.2 PWR Core and Component Description

2.3 Average Assembly Fuel Loadings

3.1.1-1 Delayed Neutron Precursor Parameters Programmed in the Analogue Reactivity Computer at Unit 2, Cycle 1 Startup

3.1.1-2 Integral Worths of Control Rod Banks in the Non-Overlap, Normal Insertion Sequence Mode under Hot, Zero Power Conditions at Unit 2, Cycle 1 Startup

3.1.1-3 Adjusted Critical Boron Concentrations Derived From Direct Measurement in Various Control Rod Bank Endpoint Configurations in the Hot, Zero Power Condition at Unit 2, Cycle 1 Startup

3.1.1-4 Measured Differential Isothermal Temperature Coefficients in Various Control Rod Bank Configurations under Hot, Zero Power Conditions at Unit 2, Cycle 1 Startup

3.1.2-1 Delayed Neutron Precursor Parameters Programmed in the Analog Reactivity Computer at Unit 2, Cycle 2 Startup

3.1.2-2 Integral Worths of Control Banks in the Non-Overlap, Normal Sequence Mode under Hot, Zero Power Conditions at Unit 2, Cycle 2 Startup

3.1.2-3 Adjusted Critical Boron Concentrations Derived from Direct Measurement in Various Control Bank Endpoint Configurations in the Hot, Zero Power Condition at Unit 2, Cycle 2 Startup

3.1.2-4 Measured Differential Isothermal Temperature Coefficients in Various Control Bank Configurations under Hot, Zero Power Conditions at Unit 2, Cycle 2 Startup

3.1.2-5 Inferred Differential Moderator Temperature Coefficients at Operating Power Levels at Unit 2, Cycle 2 Startup

3.2-1 Tabulated Operating History for Zion Unit 2, Cycle 1 and Cycle 2 Through September 1977

3.3.1-1 Conditions of Measurement of the Flux Maps Selected

3.3.2-1 through 3.3.2-30 Summaries of Power Distribution Parameters for Selected Flux Maps in the Flux Map Series 2-1-6 through 2-2-19

3.3.3-1 Identification of Supplementary Data Listed with Each Digitized Trace

3.3.3-2 Correlation of Movable Detector Sample Points with Fuel Region Boundaries and Grid Locations

3.3.3-3 through 3.3.3-7 Detailed Listings of Adjusted Movable Detector Response Traces for Selected Flux Maps in the Flux Map Series 2-1-9 through 2-2-10

LIST OF DIAGRAMS

2.1-1 (1) Variation of Coolant Average Temperature with Power Level in Zion Unit 2, Cycle 1

2.1-1 (2) Variation of Coolant Average Temperature with Power Level in Zion Unit 2, Cycle 2

2.2-1 (1) Reactor General Configuration

2.2-1 (2) Reactor Plan View

2.2-1 (3) Reactor Elevation View

2.2-2 (1) Locations of Fuel Assemblies by Type-Cycle 1

2.2-2 (2) Locations of Fuel Assemblies by Type-Cycle 2

2.2-3 (1) Locations of Fuel Assemblies by Serial Number - Cycle 1

2.2-3 (2) Locations of Fuel Assemblies by Serial Number - Cycle 2

2.2-4 Locations of Rod Cluster Control Assembly Inserts by Type

2.2-5 Locations of Rod Cluster Control Assemblies by Bank Designation

2.2-6 (1) Locations of Thimble Plugging Assembly Inserts - Cycle 1

2.2-6 (2) Locations of Thimble Plugging Assembly Inserts - Cycle 2

2.2-7 (1) Locations of Burnable Poison Assembly Inserts by Number of Burnable Poison Rods - Cycle 1

2.2-7 (2) Locations of Burnable Poison Assembly Inserts by Number of Burnable Poison Rods - Cycle 2

2.2-8 (1) Locations of Burnable Poison Assembly Inserts by Serial Number - Cycle 1

2.2-8 (2) Locations of Burnable Poison Assembly Inserts by Serial Number - Cycle 2

2.2-9 (1) Locations of Source Bearing Assembly Inserts by Type - Cycle 1

2.2-9 (2) Locations of Source Bearing Assembly Inserts by Type - Cycle 2

2.2-10 (1) Locations of Source Bearing Assembly Inserts by Serial Number - Cycle 1

2.2-10 (2) Locations of Source Bearing Assembly Inserts by Serial Number - Cycle 2

2.2-11 Locations of Movable Detector Thimbles

2.2-12 (1) Fuel Assembly General Configuration

2.2-12 (2) Fuel Assembly Plan and Elevation Views

2.2-13 Guide Tube - Grid Sleeve - Grid Strap Attachment Detail

2.2-14 Top Nozzle Detail

2.2-15 Top Grid - Guide Tube - Adapter Plate Attachment Detail

2.2-16 Instrumentation Sheath - Adapter Plate Attachment Detail

2.2-17 Bottom Nozzle Detail

2.2-18 Bottom Grid - Guide Tube - Bottom Nozzle Attachment Detail

2.2-19 Instrumentation Sheath - Bottom Nozzle Attachment Detail

2.2-20 Fuel Rod Configuration

2.2-21 Fuel Rod Top Endplug Detail

2.2-22 Fuel Rod Bottom Endplug Detail

2.2-23 Rod Cluster Control Assembly Insert Configuration

2.2-24 (1) Full Length RCCA Absorber Rod Configuration

2.2-24 (2) Part Length RCCA Absorber Rod Configuration

2.2-25 RCCA Rod Top Endplug Detail

2.2-26 RCCA Rod Bottom Endplug Detail

2.2-27 Thimble Plugging Assembly Insert Configuration

2.2-28 Burnable Poison Assembly Insert Configuration

2.2-29 Orientations of Non-Symmetric Burnable Poison Assembly Inserts - Cycle 1

2.2-30 Burnable Poison Rod Configuration

2.2-31 Burnable Poison Rod Top Endplug Detail

2.2-32 Burnable Poison Rod Bottom Endplug Detail

2.2-33 (1) Primary Source Bearing Assembly Insert Configuration - Pu-Be Primary Source

2.2-33 (2) Primary Source Bearing Assembly Insert Configuration - Cf-252 Primary Source

2.2-33 (3) Secondary Source Bearing Assembly Insert Configuration

2.2-34 (1) Locations of Source Rods - Cycle 1

2.2-34 (2) Locations of Source Rods - Cycle 2

2.2-35 (1) Pu-Be Primary Source Bearing Rod Configuration

2.2-35 (2) Cf-252 Primary Source Bearing Rod Configuration

2.2-35 (3) Sb-Be Secondary Source Bearing Rod Configuration

2.2-36 (1) Fuel Assembly with Fully Withdrawn RCCA Insert

2.2-36 (2) Fuel Assembly with Partially Inserted RCCA Insert

2.2-36 (3) Fuel Assembly with Fully Inserted RCCA Insert

2.2-36 (4) Fuel Assembly with Thimble Plugging Assembly Insert

2.2-36 (5) Fuel Assembly with Burnable Poison Assembly Insert

2.2-37 (1) Fuel Assembly with Fully Withdrawn RCCA Insert, with Partially Inserted RCCA Insert or with Thimble Plugging Assembly Insert

2.2-37 (2) Fuel Assembly with Fully Inserted RCCA Insert

2.2-37 (3) Fuel Assembly with Burnable Poison Assembly Insert, with Primary Source Bearing Assembly Insert or with Secondary Source Bearing Assembly Insert

3.1.1-1 Differential and Integral Worths of Control Bank D at Startup of Zion Unit 2, Cycle 1

3.1.1-2 Differential and Integral Worths of Control Bank C at Startup of Zion Unit 2, Cycle 1

3.1.1-3 Differential and Integral Worths of Control Bank B at Startup of Zion Unit 2, Cycle 1

3.1.1-4 Differential and Integral Worths of Control Bank A at Startup of Zion Unit 2, Cycle 1

3.1.1-5 Differential and Integral Worths of Shutdown Bank D at Startup of Zion Unit 2, Cycle 1

3.1.1-6 Differential and Integral Worths of Shutdown Bank C at Startup of Zion Unit 2, Cycle 1

3.1.1-7 Differential and Integral Worths (Incomplete) of Shutdown Bank B at Startup of Zion Unit 2, Cycle 1

3.1.1-8 Differential and Integral Worths of the Part Length Bank at Startup of Zion Unit 2, Cycle 1

3.1.1-9 Correlation of Reactor Coolant Boron Concentration with Total Worth of Inserted Control Rods at Startup of Zion Unit 2, Cycle 1.

3.1.1-10 Differential Combined Power Coefficient and Inferred Integral Combined Power Defect at Startup of Zion Unit 2, Cycle 1

3.1.1-11 Doppler-Only Components of the Differential Power Coefficient and Integral Power Defect at Startup of Zion Unit 2, Cycle 1

3.1.2-1 Correlation of Reactor Coolant Boron Concentration with Total Worth of Inserted Control Rods at Startup of Zion Unit 2, Cycle 2

3.1.2-2 Doppler-Only Component of the Differential Power Coefficient at Startup of Zion Unit 2, Cycle 2

3.2.1 through 3.2-46 Operating History for December 1973 through September 1977

3.4.1-1 through 3.4.1-8 Core Parameter Variations During Load Follow Tests

3.4.2-1 through 3.4.2-4 Axial Offset Variations During a Free Running Spatial Xenon Oscillation in Zion Unit 1 at 2216 MWD/MTU in Cycle 1

1.0 INTRODUCTION AND SUMMARY

Under EPRI Contract RP-519-6, and with the continuing cooperation of Commonwealth Edison Company, a set of design and operating data relevant to Cycle 1 and Cycle 2 of Zion Unit 2 has been assembled and is here documented.

The heat source of Zion Unit 2 is a conventional four loop pressurized water nuclear power reactor designed by Westinghouse Electric Corporation, constructed by Westinghouse and Sargent and Lundy Corporation and owned and operated by Commonwealth Edison Company.

Under an earlier EPRI contract and again in cooperation with Commonwealth Edison Company, experimental measurements were made by General Electric Corporation of the decay gamma source distribution in fuel assemblies removed from the Zion Unit 2 core at the end of Cycle 1. The design and operating data collected here are intended to complement the experimental observations reported in EPRI report NP-509 (dated September, 1977) and to provide a reference data set against which nuclear design methods and procedures can be tested.

The scope of the data set collected here is limited to the nuclear aspects of core design and operation. Thermal and hydraulics and structural parameters are considered only to the extent that they impact directly on the nuclear properties of the core.

The remainder of this report is structured as follows:

Section 2.0 presents the nuclear design parameters of the Cycle 1 and Cycle 2 cores as collected from the open literature and from open Commonwealth Edison Company file. The design parameters are summarized in a set of Tables, supplemented, as appropriate, by a series of referenced Diagrams, Calculation Sheets and Material Sheets. Sources of all listed

parameter values are identified to facilitate verification and elaboration, if necessary.

Section 3.0 provides a summary of the operational histories of Cycle 1 and the first part of Cycle 2 of Zion Unit 2, spanning the period from initial criticality in December 1973 through September 1977, when data collection for this project ended. All data compiled here are drawn from the files of Commonwealth Edison Company. The data are presented in the form of tabulations, diagrams and histograms and cover

- core physics parameters measured at the startup of Cycle 1 and of Cycle 2
- the operating history over the reported period
- measured core power distribution parameters obtained with the incore movable detector system
- measured responses of the core during certain special maneuvering operations

2.0 NUCLEAR DESIGN PARAMETERS FOR ZION UNIT 2, CYCLES 1 AND 2

The nuclear design characteristics of the Cycle 1 and Cycle 2 cores of Zion Unit 2 that have been compiled from various sources in the open literature are collected in a set of self-explanatory tables. Each table consists of a series of items identified by name and sequence number, the appropriate value of the parameter listed, the source from which the information was obtained and references to supplementary diagrams, calculations and material descriptions. Table 2.1 provides a short summary of the basic thermodynamic and thermofluids characteristics of the Zion Unit 2 reactor. Table 2.2 is a detailed physical description of the components of the core in a form suitable for nuclear design verification studies. Table 2.3 lists the specific characteristics of the fuel loadings used in Cycles 1 and 2.

TABLE 2.0

ABBREVIATIONS USED IN IDENTIFYING SOURCES

OF INFORMATION LISTED IN TABLES 2.1, 2.2 AND 2.3

Documents Issued by Commonwealth Edison Company

FSAR	Zion Units 1 and 2 Final Safety Analysis Report
SUR-1	Zion Unit 2 Cycle 1 Startup Report
SUR-2	Zion Unit 2 Cycle 2 Startup Report
RSE-2	Zion Unit 2 Cycle 2 Reload Safety Evaluation

Documents Issued by Westinghouse Electric Corporation

RESAR-3	Reference Safety Analysis Report
W dwg 1096E31	"Zion - No. 2 Fuel Assembly Outline and Reprocessing Drawing"
W dwg 271C427	"Zion - No. 2 Fuel Rod Assembly Outline and Reprocessing Drawing"

REACTOR: ZION UNIT 2
CYCLES: 1 and 2

TABLE 2.1
THERMODYNAMIC AND THERMOFLUIDS CHARACTERISTICS

Sheet 1 of 2

ITEMS	VALUES	SOURCES	REFERENCES
1.0 Thermal Power Parameters			
1.1 Rated Full Thermal Power (MW_{th})	3250	FSAR Table 3.2.2-1	
1.2 Volumetric Power Density (MW_{th}/liter)	99.9	Calculated	Calculation Sheet item 1.2
1.3 Fraction of Thermal Power Generated in Fuel	0.974	FSAR Table 3.2.2-1	
1.4 Linear Power Density (watts/cm)	226.4	Calculated	Calculation Sheet item 1.4
2.0 Reactor Coolant Flow Parameters			
2.1 Total Coolant Mass Flow Rate (kg/hr)	6.67×10^7	Personal Communication from Comm. Ed. Personnel	
2.2 Coolant Mass Flow Rate Through the Core (kg/hr)	6.30×10^7	FSAR.Table 1.4-1	
2.3 Coolant Bypass Mass Flow Rate (kg/hr)	0.37×10^7	Calculated	Calculation Sheet item 2.3
2.4 Core Cross-Sectional Flow Area (Total) (m^2)	5.344	Calculated	Calculation Sheet item 2.4
2.5 Core Cross-Sectional Flow Area (Fuel Cells Only) (m^2)	4.498	Calculated	Calculation Sheet item 2.5
3.0 Reactor Coolant Pressure Parameters			
3.1 System Pressure (kg/cm^2) absolute	158.23 ± 0.35	Calculated	Calculation Sheet item 3.1

REACTOR: ZION UNIT 2

CYCLES: 1 and 2

TABLE 2.1

THERMODYNAMIC AND THERMOFLUIDS CHARACTERISTICS

Sheet 2 of 2

ITEM	VALUES	SOURCES	REFERENCES
3.2 Pressure Drop Across Core (Kg/cm^2)	2.1	FSAR Table 3.2.2-1	
4.0 Reactor Coolant Temperature Parameters			
4.1 Coolant Average Temperature at Zero Power (°C)	286.1	SUR-1 SUR-2	
4.2 Coolant Average Temperature at Operating Power (°C)	See Reference	Section 3.2	Diagram 2.1-1
4.3 Coolant Temperature Increase at Full Power (°C)	33.0	Calculated	Calculation Sheet item 4.3

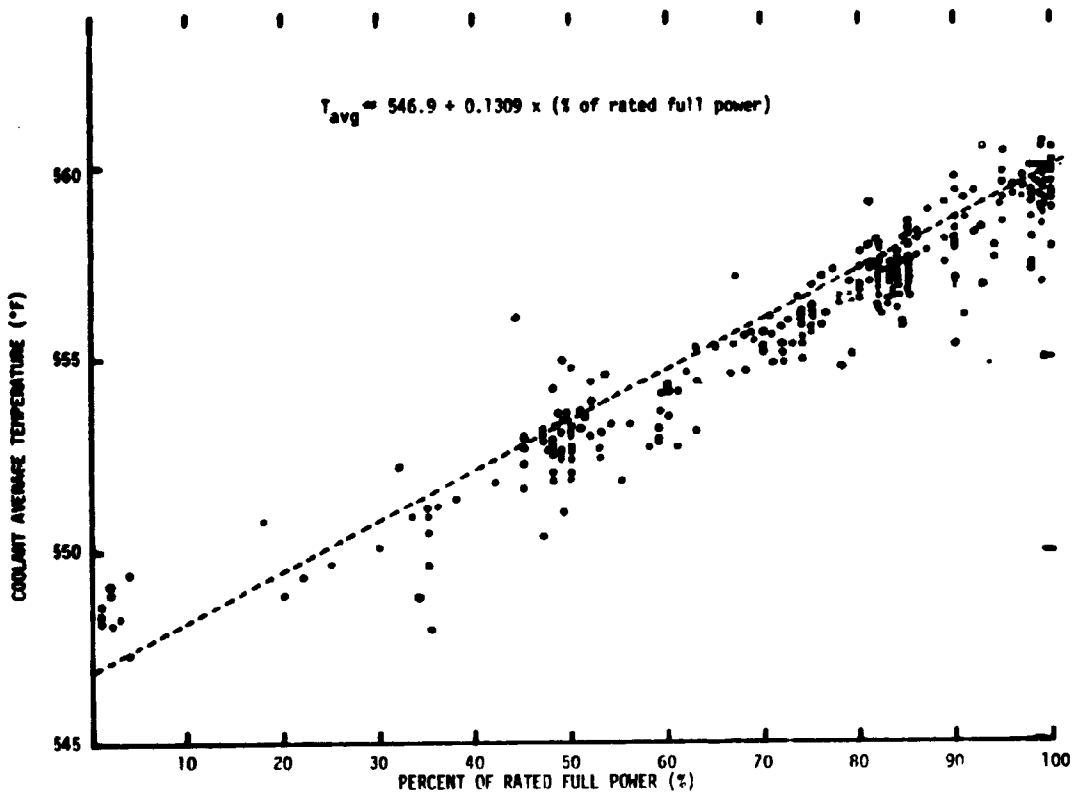

DIAGRAM 2.1-1 (1) VARIATION OF COOLANT AVERAGE TEMPERATURE WITH POWER LEVEL IN ZION UNIT 2, CYCLE 1

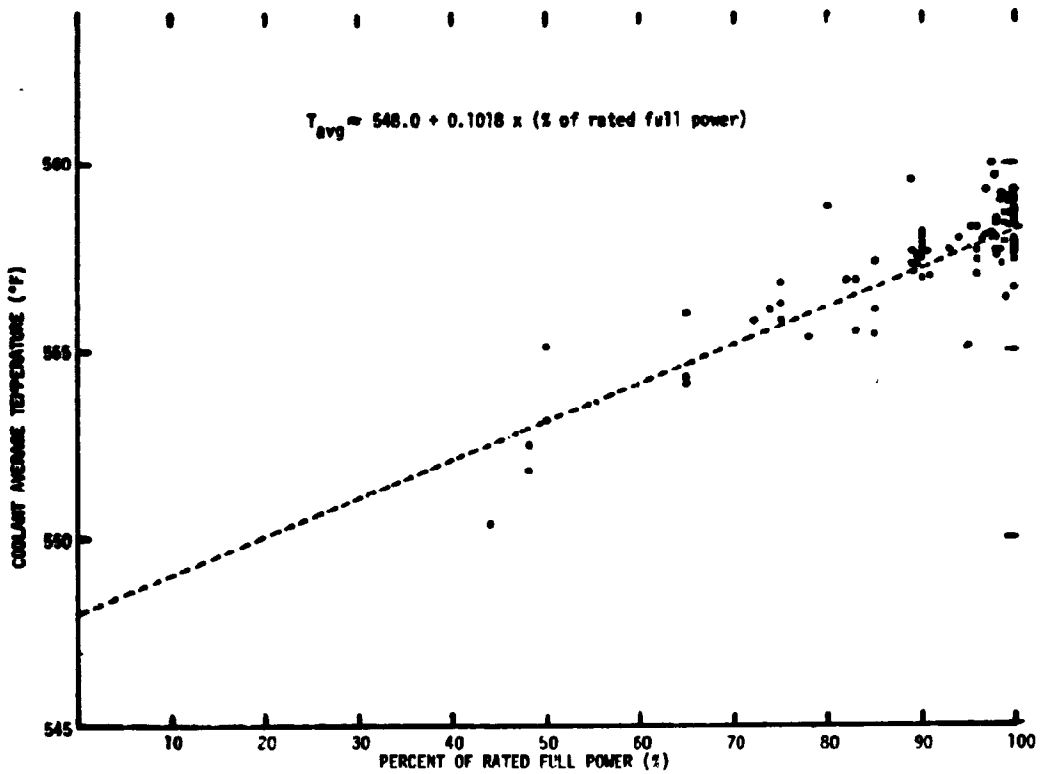

DIAGRAM 2.1-1 (2) VARIATION OF COOLANT AVERAGE TEMPERATURE WITH POWER LEVEL IN ZION UNIT 2, CYCLE 2

CALCULATION SHEETS FOR TABLE 2.1

Item	Calculation/Comment	
1.2	**Volumetric Power Density**	
	Total core volume	
	$193 \; [(21.50)^2 \; (364.6)] = 32538.5$ liters	
	Dimensions are taken from Table 2.2	
	Volumetric power density	
	$\frac{3,250,000}{32,538.5}$	= 99.88 kw/liter
1.4	**Linear Power Density**	
	Total length of fuel columns	
	$(193)(204)(364.6) = 14,355,031$ cm	
	Dimensions are taken from Table 2.2	
	Linear power density	
	$\frac{(3,250,000,000)(0.974)}{14,355,031}$	= 226.4 watts/cm
2.3	**Coolant Bypass Mass Flow Rate**	
	$6.67 \times 10^7 - 6.30 \times 10^7$	$= 0.37 \times 10^7$ kg/hr
2.4	**Total Core Cross Sectional Flow Area**	
	$[(8.426 \times 2.54)^2 \; 0.595 + 2(0.040)(8.446)(2.54)^2] \; \frac{193}{10^4}$	= 5.344 m^2
	Dimensions are taken from Table 2.2	
2.5	**Cross Sectional Flow Area for Fuel Cells Only**	
	$\left[(0.563 \times 2.54)^2 - \frac{\pi}{4}(1.072)^2\right](204)\frac{(193)}{10^4}$	= 4.498 m^2
	Dimensions are taken from Table 2.2	

Item	Calculation/Comment
3.1	**Reactor Coolant System Pressure**
	The average of all available values of pressurizer pressure, given in section 3.2, is 2250.5 ± 5. psia or 158.23 ± 0.35 kg/cm^2 where the uncertainty is approximately one standard deviation.
4.3	**Reactor Coolant Temperature Increase at Full Power**
	$(3250000)\ \frac{3412}{3600} = 3{,}081{,}180.5$ BTU/sec total power
	$(6.67 \times 10^7)\ \frac{2.2}{3600} = 40{,}761.1$ lbs./sec total flow
	$\frac{3{,}081{,}180.5}{40{,}761.1} = 75.59$ BTU/lb increase
	= 59.4 °F Temperature increase
	= 33.0 °C
	Note that the temperature increase is based on total reactor coolant flow, including bypass flow.

TABLE 2.2 PWR CORE AND COMPONENT DESCRIPTION

General Format of the Table

The configuration of all fuel assemblies used in Cycles 1 and 2 in Zion Unit 2 is the same. Thus, in a purely mechanical sense any fuel assembly in any of the four regions considered can be loaded in any fuel assembly location in the core and can accept any of the possible inserts which include:

Inserts entering the fuel assembly from the top

- Full length rod cluster control assemblies (RCCA)
- Part length rod cluster control assemblies
- Thimble plugging assembly inserts
- Burnable poison assembly inserts
- Source bearing assembly inserts

Inserts entering the fuel assembly from the bottom

- Movable detector thimbles

Although the configurations of the individual fuel rods differ slightly among the four enrichment regions that make up Cycles 1 and 2, the fuel assembly structure is such that any of the four types of fuel rods can be accommodated in any assembly. Of course, after fuel rods of a specified enrichment have been loaded into a fuel assembly no further changes are made, and the fuel assembly is assocated with the enrichment region of which the fuel rods are a part. Accordingly, following the initial section of the table in which general information regarding the number and locations of components in the core is summarized, the detailed design parameters of the fuel assembly, of the fuel rods and of each of the insert types are collected under appropriate separate subheadings in Table 2.2.

Finally, since those components of the core that are outside of, but immediately adjacent to, the fuel bearing zone influence to some degree both neutron multiplication and the neutron flux distribution in the fuel bearing zone detailed descriptions of the components in the form of tabulations of material volume fractions at varying distances from a specified geometric datum or of appropriate dimensions and material identifications are given under the subheadings of top reflector, bottom reflector, and radial reflector details in Table 2.2.

Supplementary Notes

- The datum for all axial locations is defined to be the bottom of the bottom nozzle of the fuel assemblies, or equivalently the top of the lower core plate. All other axial locations are referenced to this plane either directly or indirectly.
- The upper axial reflector region is considered to extend to the bottom of the adapter plate of the fuel assemblies. The lower axial reflector region extends to the bottom of the lower core plate.
- The distance Δ, indicated in various entries in Table 2.2, is the distance between the top of the fuel assembly lower nozzle and the bottom of the fuel rod bottom endplugs. Prior to loading, the fuel rods which would normally be in contact with the lower nozzle of each fuel assembly were physically moved upwards a short distance. The magnitude of the displacement is not available in the open literature; however, a reasonable estimate is believed to be about 2 centimeters. There is some evidence that the axial displacement may have changed during operation although the evidence is far from conclusive.
- The format of the tables supplementary to general items 8.0 and 9.0 merits some additional explanation. The "ZONE" entry matches the zone definitions of the referenced diagrams. The offset "Distance, etc." entries specify the upper and lower bounds of the associated zones. Where more than one value is listed for a given distance, the numbers in parentheses following each value indicate the fuel region for which the value applies (region 4 data were not available when the tables were compiled). The volume fractions are then self-evident. The volume fraction assigned to water is always the difference between unity and the sum of the volume fractions of all

components

- In a few cases involving nuclear design parameters listed in the detailed tabulations of Table 2.2 values quoted for the parameters in the Zion Unit 2 FSAR were found to be either internally inconsistent or inconsistent with corresponding values quoted in FSAR documents prepared for other, later units using the same 15x15 fuel configuration. Where enough evidence could be assembled from the open literature to show that an FSAR value was not valid, the preferred value was substituted. The substitutions are documented in the Calculation Sheets appended to Table 2.2. Where no basis could be found for choosing between a Zion Unit 2 FSAR value and a corresponding value from another source in the open literature the FSAR value was retained. Hence, certain of the parameter values listed in Table 2.2 may not agree exactly with the as-built values. None of the differences between the tabulated FSAR values and values given in other sources are believed to be significant for the purposes for which Table 2.2 is intended.
  In a number of other cases involving nuclear design parameters in the detailed tabulations of Table 2.2 specific values of the indicated parameters could not be located in the open literature. However, sufficient information was found in nonproprietary sources to permit estimates to be made of the values of these parameters in question. In such cases estimated of the values were made using, as appropriate, dimensions scaled from available drawings and sketches and inferences based on knowledge of normal engineering practice and the values are entered in Table 2.2 All such estimated values are so indicated and the procedures used in making the estimates are documented in the referenced Calculations Sheet items. Scaled values of dimensions taken from source drawings are shown in parenthesis, as appropriate,

in the diagrams appended to Table 2.2.

While no guarantee can be made that the estimated values are, in fact, accurate within a specified margin of uncertainty it is believed that the estimated values are sufficiently accurate to be used for computational procedure verification. In those cases in which specific values of parameters could not be located in the open literature and in which the collateral information available was insufficient to permit estimates to be made of the values of the parameters a "Not Available" entry is made in the "VALUES" column of Table 2.2.

REACTOR: ZION UNIT 2
CYCLES: 1 and 2

TABLE 2.2
PWR CORE AND COMPONENT DESCRIPTION

ITEMS	VALUES	SOURCES	REFERENCES
1.0 REACTOR			
1.1 General Reactor Configuration	See references	FSAR Fig. 3.2.3-1	Diagrams 2.2-1(1), 2.2-1(2) and 2.2-1(3)
1.2 Number of Fuel Assemblies	193	FSAR Table 3.2.3-1	
1.3 Location of Fuel Assemblies by Type	-	-	-
1.3.1 Cycle 1	See reference	SUR-1 Fig. 1.1	Diagram 2.2-2(1)
1.3.2 Cycle 2	See reference	RSE-2	Diagram 2.2-2(2)
1.4 Location of Fuel Assemblies by Serial Number	-	-	-
1.4.1 Cycle 1	See reference	SUR-1 Fig. 1.1	Diagram 2.2-3(1)
1.4.2 Cycle 2	See reference	SUR-2 Fig. 1.1	Diagram 2.2-3(2)
1.5 Number of Rod Cluster Control Assembly Inserts	53 full length 8 part length	FSAR Table 3.2.3-1 FSAR Fig. 3.2.3-1	
1.6 Location of RCCA Inserts by Type	See reference	FSAR Fig. 3.2.1-1	Diagram 2.2-4
1.7 Location of RCCA Inserts by Bank Designation	See reference	FSAR Fig. 3.2.1-1	Diagram 2.2-5
1.8 Number of Thimble Plugging Assembly Inserts	-	-	-

REACTOR: ZION UNIT 2
CYCLES: 1 and 2

TABLE 2.2
PWR CORE AND COMPONENT DESCRIPTION

ITEMS	VALUES	SOURCES	REFERENCES
1.8.1 Cycle 1	36	SUR-1 Fig. 1.1	
1.8.2 Cycle 2	105	SUR-2 Fig. 1.1	
1.9 Locations of Thimble Plugging Assembly Inserts	-	-	-
1.9.1 Cycle 1	See reference	SUR-1 Fig. 1.1	Diagram 2.2-6(1)
1.9.2 Cycle 2	See reference	SUR-2 Fig. 1.1	Diagram 2.2-6(2)
1.10 Number of Burnable Poison Assembly Inserts	-	-	-
1.10.1 Cycle 1	92	SUR-1 Fig. 1.1	
1.10.2 Cycle 2	25	SUR-2 Fig. 1.1	
1.11 Number of Burnable Poison Rods	-	-	-
1.11.1 Cycle 1	1434	SUR-1 Fig. 1.1	
1.11.2 Cycle 2	436	SUR-2 Fig. 1.1	
1.12 Locations of Burnable Poison Assembly Inserts by Number of B/P Rods	-	-	-
1.12.1 Cycle 1	See reference	SUR-1 Fig. 1.1	Diagram 2.2-7(1)

REACTOR: ZION UNIT 2
CYCLES: 1 and 2

TABLE 2.2
PWR CORE AND COMPONENT DESCRIPTION

ITEMS	VALUES	SOURCES	REFERENCES
1.12.2 Cycle 2	See reference	SUR-2 Fig. 1.1	Diagram 2.2-7(2)
1.13 Locations of Burnable Poison Assembly Inserts by Serial Number	-	-	-
1.13.1 Cycle 1	See reference	SUR-1 Fig. 1.1	Diagram 2.2-8(1)
1.13.2 Cycle 2	See reference	SUR-2 Fig. 1.1	Diagram 2.2-8(2)
1.14 Number of Source Bearing Assembly Inserts	-	-	-
1.14.1 Cycle 1	2 primary assemblies 2 secondary ass'ys.	SUR-1 Fig. 1.1	
1.14.2 Cycle 2	2 secondary ass'ys.	SUR-2 Fig. 1.1	
1.15 Location of Source Bearing Assembly Inserts by Type	-	-	-
1.15.1 Cycle 1	See reference	SUR-1 Fig. 1.1	Diagram 2.2-9(1)
1.15.2 Cycle 2	See reference	SUR-2 Fig. 1.1	Diagram 2.2-9(2)
1.16 Location of Source Bearing Assembly Inserts by Serial Number	-	-	
1.16.1 Cycle 1	See reference	SUR-1 Fig. 1.1	Diagram 2.2-10(1)
1.16.2 Cycle 2	See reference	SUR-2 Fig. 1.1	Diagram 2.2-10(2)

REACTOR: ZION UNIT 2
CYCLES: 1 and 2

TABLE 2.2
PWR CORE AND COMPONENT DESCRIPTION

Sheet 4 of 43

ITEMS	VALUES	SOURCES	REFERENCES
1.17 Number of Movable Detector Thimbles	58	FSAR page 7.6-2	
1.18 Locations of Movable Detector Thimbles	See reference	Unit 2 INCORE Code Printouts	Diagram 2.2-11

REACTOR: ZION UNIT 2 | TABLE 2.2 | Sheet 5 of 43

CYCLES: 1 and 2 | PWR CORE AND COMPONENT DESCRIPTION

ITEMS	VALUES	SOURCES	REFERENCES
2.0 FUEL ASSEMBLY DETAIL	-	-	
2.1 Fuel Assembly Configuration	See references	W dwg. 1096E31 FSAR Fig. 3.2.3-9	Diagrams 2.2-12(1) and 2.2-12(2)
2.2 Number of Guide Tubes per Assembly	20	FSAR Table 3.2.3-1	
2.3 Length of Guide Tube Between Top of Bottom Nozzle and Bottom of Adaptor Plate	389.9 cm	W dwg. 1096E31	
2.4 Length of Dash Pot Section Above Bottom of Bottom Nozzle	Approx. 68 cm	RESAR-3, pg 4.2-83	
2.5 Diameters of Guide Tube Above Dash Pot Section	O.D. 1.384 cm I.D. 1.308 cm	FSAR Table 3.2.3-1	
2.6 Diameters of Guide Tube in Dash Pot Section	O.D. 1.229 cm I.D. 1.153 cm	FSAR Table 3.2.3-1	
2.7 Material and Weight per Unit Length of Guide Tube	Zircalloy 4 1.062 g/cm abv dashpot 0.931 g/cm in dashpot	FSAR Table 3.2.3-14	Material Sheet 4 Calculation Sheet item 2.7
2.8 Number of Instrumentation Sheaths per Assembly	1	FSAR Table 3.2.3-1	
2.9 Length of Instrumentation Sheath btwn Top of Bottom Nozzle & Btm of Adaptor plate	389.9 cm	W dwg 1096E31	
2.10 Diameters of Instrumentation Sheath	Not available (see reference)	None available	Calculation Sheet item 2.10
2.11 Mat'l. & Weight per unit Length of Instrumentation Sheath	Not available Not available	None available None available	Calculation Sheet item 2.10
2.12 Number of Spacer Grids Per Assembly	7	FSAR Fig. 3.2.3-1	

REACTOR: ZION UNIT 2

CYCLES: 1 and 2

TABLE 2.2

PWR CORE AND COMPONENT DESCRIPTION

ITEMS	VALUES	SOURCES	REFERENCES
2.13 Heights of Nominal Mid-planes of Spacer Grids Above Bottom of Bottom Nozzle	Top 389.4 cm 342.0 cm 275.4 cm 208.9 cm 142.4 cm 75.9 cm Bottom 14.4 cm	W dwg. 1096E31	
2.14 Nominal Height of Grid Egg Crate	3.81 cm	W dwg. 1096E31	
2.15 Nominal Thickness of Grid Egg Crate	Outer Strap 0.052 cm Inner Grids 0.039 cm	FSAR Fig. 3.2.3-8	
2.16 Grid Sleeve Configuration	See reference	RESAR-3 Fig. 4.2-5	Diagram 2.2-13
2.17 Materials and Weights of One Spacer Grid	Inconel-718 835g Stainless Steel 171g	FSAR pg. 3.2.3-15	Material sheets 1 and 3 Calculation sheet item 2.17
2.18 Top Nozzle and Adapter Plate Configuration	See reference	FSAR Fig. 3.2.3-9	Diagram 2.2-14
2.19 Height of Top of Adapter Plate above Bottom of Bottom Nozzle	398.3 cm	W dwg. 1096E31	
2.20 Material and Weight of Adapter Plate	Stainless Steel 304 3090 g	RESAR-3 pg. 4.2-8	Material sheet 1 Calculation sheet item 2.20
2.21 Top Grid-Guide Tube-Adapter Plate Attachment Detail	See reference	RESAR-3 Fig. 4.2-7	Diagram 2.2-15
2.22 Instrumentation Sheath - Adapter Plate Attachment Detail	See reference	FSAR Fig. 3.2.3-9 W dwg. 1096E31	Diagram 2.2-16
2.23 Bottom Nozzle Configuration	See reference	FSAR Fig. 3.2.3-9	Diagram 2.2-17

REACTOR: ZION UNIT 2

CYCLES: 1 and 2

TABLE 2.2

PWR CORE AND COMPONENT DESCRIPTION

ITEMS	VALUES	SOURCES	REFERENCES
2.24 Material and Weight of Bottom Nozzle	Stainless Steel 304 6496 g	W dwg. 1096E31	Material sheet 1 Calculation sheet item 2.24
2.25 Bottom Grid-Guide Tube Bottom Nozzle Attachment Detail	See reference	RESAR-3 Fig. 4.2-6	Diagram 2.2-18
2.26 Instrumentation Sheath - Bottom Nozzle Attachment Detail	See diagram	FSAR Fig. 3.2.3-9	Diagram 2.2-19
2.27 Length of Movable Detector Thimble Above Bottom of Bottom Nozzle	Not available (see reference)	None available	Calculation sheet item 2.27
2.28 Diameters of Movable Detector Thimble	Not available	None available	
2.29 Materials and Weight per Unit Length of Movable Detector Thimble	Stainless Steel Not available	RESAR-3 pg. 4.2-31	Material sheet 1

REACTOR: ZION UNIT 2
CYCLES: 1 and 2

TABLE 2.2
PWR CORE AND COMPONENT DESCRIPTION

ITEMS	VALUES	SOURCES	REFERENCES
3.0 FUEL ROD DETAIL			
3.1 Number of Fuel Rods Per Assembly	204	FSAR Table 3.2.3-1	
3.2 Height of Bottom of Fuel Rod Above Bottom of Bottom Nozzle	6.95 + Δ cm	W dwg. 1096E31	Calculation sheet item 3.2
3.3 Fuel Rod Configuration	See reference	FSAR Fig. 3.2.3-15 W dwg. 271C427	Diagram 2.2-20
3.4 Length of Fuel Tube		-	
3.4.1 Region 1	384.76 cm	W dwg. 271C427	
3.4.2 Region 2	383.44 cm	W dwg. 271C427	
3.4.3 Region 3	383.44 cm	W dwg. 271C427	
3.4.4 Region 4	Not Available	None Available	
3.5 Diameters of Fuel Tube	O.D. 1.072 cm I.D. 0.9486 cm	FSAR Table 3.2.3-1	
3.6 Material and Weight per Unit Length of Fuel Tube	Zircalloy 4 1.284 g/cm	FSAR Table 3.2.3-1	Material Sheet 4 Calculation Sheet item 3.6
3.7 Top Endplug Detail	See reference	FSAR Fig. 3.2.3-15 W dwg. 271C427	Diagram 2.2-21
3.8 Material and Weight of Top Endplug	Zircalloy 4 8.1 g	W dwg. 271C427	Material Sheet 4 Calculation sheet item 3.8

REACTOR: ZION UNIT 2
CYCLES: 1 and 2

TABLE 2.2
PWR CORE AND COMPONENT DESCRIPTION

Sheet 9 of 43

ITEMS	VALUES	SOURCES	REFERENCES
3.9 Bottom Endplug Detail	See reference	FSAR Fig. 3.2.3-15 W dwg. 271C427	Diagram 2.2-22
3.10 Material and Weight of Bottom Endplug	Zircalloy 4 8.1 g	W dwg. 271C427	Material Sheet 4 Calculation Sheet item 3.8
3.11 Length of Plenum	-	-	
3.11.1 Region 1	16.20 cm	W dwg. 271C427	
3.11.2 Region 2	17.92 cm	W dwg. 271C427	
3.11.3 Region 3	19.44 cm	W dwg. 271C427	
3.11.4 Region 4	Not Available	None Available	
3.12 Plenum Fill Gas	Helium	FSAR pg. 3.2.3-16	
3.13 Material and Weight of Plenum Spring	-	-	
3.13.1 Region 1	Carbon Steel 23 g	W dwg. 271C427	Material Sheet 2
3.13.2 Region 2	Carbon Steel 23 g	W dwg. 271C427	Material Sheet 2
3.13.3 Region 3	Stainless Steel 23 g	W dwg. 271C427	Material Sheet 1
3.13.4 Region 4	Not Available	None Available	

REACTOR: ZION UNIT 2
CYCLES: 1 and 2

TABLE 2.2
PWR CORE AND COMPONENT DESCRIPTION

ITEMS	VALUES	SOURCES	REFERENCES
3.14 Length of Fuel Column	-	-	-
3.14.1 Region 1	365.76 cm	W dwg. 271C427	
3.14.2 Region 2	364.24 cm	W dwg. 271C427	
3.14.3 Region 3	362.71 cm	W dwg. 271C427	
3.14.4 Region 4	365.76 cm	RSE-2	
3.15 Length of Fuel Pellet	1.524 cm	FSAR Table 3.2.3-1	
3.16 Diameter of Fuel Pellet	0.9294 cm	FSAR Table 3.2.3-1	
3.17 Volume Fraction of Fuel Pellet End Dish	0.0117		Calculation Sheet item 3.17
3.18 Material and Density of Fuel Pellet	-	-	-
3.18.1 Region 1	UO_2 (sintered) 10.28 g/cm^3	FSAR Table 3.2.3-1 RSE-2	Material Sheet 7
3.18.2 Region 2	UO_2 (sintered) 10.17 g/cm^3	FSAR Table 3.2.3-1 RSE-2	Material Sheet 7
3.18.3 Region 3	UO_2 (sintered) 10.32 g/cm^3	FSAR Table 3.2.3-1 RSE-2	Material Sheet 7
3.18.4 Region 4	UO_2 (sintered) 10.35 g/cm^3	FSAR Table 3.2.3-1	Material Sheet 7 Calculation Sheet item 3.18

REACTOR: ZION UNIT 2
CYCLES: 1 and 2

TABLE 2.2
PWR CORE AND COMPONENT DESCRIPTION

ITEMS	VALUES	SOURCES	REFERENCES
4.0 ROD CLUSTER CONTROL ASSEMBLY INSERT DETAIL			
4.1 RCCA Insert Configuration	See reference	FSAR Fig. 3.2.3-4a	Diagram 2.2-23
4.2 Height of Bottom of Fully Inserted Absorber Rod Above Bottom of Bottom Nozzle	13.9 cm	W dwg. 1096E31 SUR-1 Fig 10.5-10.12	Calculation Sheet Item 4.2
4.3 Number of Absorber Rods per Assembly	20	FSAR Table 3.2.3-1	
4.4 RCCA Rod Configuration	-	-	-
4.4.1 Full Length RCCA Rod	See reference	W dwg 1096E31 FSAR Fig. 3.2.3-9	Diagram 2.2-24(1)
4.4.2 Part Length RCCA Rod	See reference	FSAR Table 3.2.3-1	Diagram 2.2-24(2)
4.5 Length of Absorber Tube	Approx. 367 cm		Calculation Sheet Item 4.5
4.6 Diameters of Absorber Tube	O.D. 1.130 cm I.D. 0.882 cm	RESAR-3 Fig 4.2-8 FSAR Table 3.2.3-1	
4.7 Material & Weight per Unit Length of Absorber Tube	Stainless Steel 304 3.1 g/cm	RESAR-3 pg 4.2-45	Material Sheet 1 Calculation Sheet Item 4.7
4.8 Top Endplug Detail	See reference	FSAR Fig. 3.2.3-9	Diagram 2.2-25 Calculation Sheet Item 4.5
4.9 Material & Weight per Unit Length of Top Endplug	Stainless Steel 304 7.9 g/cm		Material Sheet 1 Calculation Sheet Item 4.9
4.10 Bottom Endplug Detail	See reference	FSAR Fig. 3.2.3-9	Diagram 2.2-26

REACTOR: ZION UNIT 2
CYCLES: 1 and 2

TABLE 2.2
PWR CORE AND COMPONENT DESCRIPTION

ITEMS	VALUES	SOURCES	REFERENCES
4.11 Material and Weight of Bottom Endplug	Stainless Steel 304 14.0 g		Material Sheet 1 Calculation Sheet items 4.9 and 4.11
4.12 Length of Plenum	-	-	-
4.12.1 Full Length RCCA	Approx. 5 cm	FSAR Fig. 3.2.3-9 FSAR Fig. 3.2.3-4a	Calculation Sheet item 4.5
4.12.2 Part Length RCCA	Not available	None available	
4.13 Plenum Fill Gas	Air		Calculation Sheet item 4.13
4.14 Material and Weight of Plenum Spring	Not available (see reference)	None available	Calculation Sheet item 4.14
4.15 Length of Absorber Column	-	-	-
4.15.1 Full Length RCCA	360.7 cm	FSAR Table 3.2.3-1	Calculation Sheet item 4.5
4.15.2 Part Length RCCA	91.4 cm	FSAR Table 3.2.3-1	
4.16 Diameter of Absorber Column	Not available (see reference)	None available	Calculation Sheet item 4.16
4.17 Material & Weight per Unit Length of Absorber Column	Ag-In-Cd alloy Not available	FSAR Table 3.2.3-1 None available	Material Sheet 5
4.18 Length of Filler in Part Length RCCA	Not available	None available	
4.19 Diameter of Filler in Part Length RCCA	Not available	None available	

REACTOR: ZION UNIT 2

CYCLES: 1 and 2

TABLE 2.2

PWR CORE AND COMPONENT DESCRIPTION

ITEMS	VALUES	SOURCES	REFERENCES
4.2D Material & Weight per Unit Length of Part Length RCCA Filler	Aluminum Oxide Not available	FSAR Fig. 3.2.3-17 None available	Material Sheet 8 Calculation Sheet item 4.16

REACTOR: ZION UNIT 2
CYCLES: 1 and 2

TABLE 2.2
PWR CORE AND COMPONENT DESCRIPTION

ITEMS	VALUES	SOURCES	REFERENCES
5.0 THIMBLE PLUGGING ASSEMBLY INSERT DETAIL			
5.1 Thimble Plugging Assembly Insert Configuration	See reference	W dwg. 1096E31 RESAR-3 Fig. 4.2-15	Diagram 2.2-27
5.2 Height of Bottom of Thimble Plug Above Bottom of Bottom Nozzle	382.1 cm	W dwg. 1096E31	
5.3 Number of Thimble Plugs per Assembly	20	FSAR Table 3.2.3-1	
5.4 Length of Thimble Plug Below Top of Adapter Plate	16.2 cm	W dwg. 1096E31	
5.5 Length of Neck Section of Thimble Plug Below Top of Adapter Plate	4.0 cm	W dwg. 1096E31 RESAR-3 Fig. 4.2-15	
5.6 Diameter of Thimble Plug	-		
5.6.1 Outside of Neck Region	1.26 cm	RESAR-3 Fig. 4.2-15	
5.6.2 In Neck Region	0.56 cm	RESAR-3 Fig. 4.2-15	
5.7 Material and Weight per Unit Length of Thimble Plug	-		
5.7.1 Outside of Neck Region	Stainless Steel 304 9.93 g/cm	RESAR-3 pg. 4.2-52	Material Sheet 1 Calculation Sheet item 5.7
5.7.2 In Neck Region	Stainless Steel 304 1.92 g/cm	RESAR-3 pg. 4.2-52	Material Sheet 1 Calculation Sheet item 5.7

REACTOR: ZION UNIT 2
CYCLES: 1 and 2

TABLE 2.2
PWR CORE AND COMPONENT DESCRIPTION

ITEMS	VALUES	SOURCES	REFERENCES
6.0 BURNABLE POISON ASSEMBLY INSERT DETAIL			
6.1 Burnable Poison Assembly Configuration	See reference	RESAR-3 Fig. 4.2-11	Diagram 2.2-28
6.2 Orientations of Non-symmetric B/P Assembly Inserts	See reference	RESAR-3 Fig. 4.2-11	Diagram 2.2-29
6.3 Height of Bottom of B/P Rod Above Bottom of Btm Nozzle	13.2 cm	W dwg. 1096E31	
6.4 Burnable Poison Rod Configuration	See references	FSAR Fig. 3.2.3-12	Diagram 2.2-30 Calculation Sheet item 6.4
6.5 Length of B/P Cladding Tube	376.6 cm	FSAR Fig. 3.2.3-12	Calculation Sheet item 6.4
6.6 Diameters of B/P Cladding Tube	O.D. 1.116 cm I.D. 1.017 cm	FSAR Fig. 3.2.3-12	
6.7 Material and Weight per Unit Length of B/P Cladding Tube	Stainless Steel 304 1.31 g/cm	FSAR Fig. 3.2.3-12	Material Sheet 1 Calculation Sheet item 6.7
6.8 Top Endplug Detail	See reference	FSAR Fig. 3.2.3-12	Diagram 2.2-31
6.9 Length of Neck Section in Top Endplug Below Top of Adapter Plate	Approx. 4.0 cm	FSAR Fig. 3.2.3-12	
6.10 Diameter of Top Endplug	-	-	-
6.10.1 Above Neck Region	0.95 cm	FSAR Fig. 3.2.3-12	
6.10.2 In Neck Region	0.56 cm	FSAR Fig. 3.2.3-12	

REACTOR: ZION UNIT 1
CYCLES: 1 and 2

TABLE 2.2
PWR CORE AND COMPONENT DESCRIPTION

ITEMS	VALUES	SOURCES	REFERENCES
6.10.3 Below Neck Region	1.12 cm	FSAR Fig. 3.2.3-12	
6.11 Material and Weight per Unit Length of Top Endplug	-	-	-
6.11.1 Above Neck Region	Stainless Steel 304 5.60 g/cm	FSAR Fig. 3.2.3-12	Material Sheet 1 Calculation Sheet item 6.11
6.11.2 In Neck Region	Stainless Steel 304 1.43 g/cm	FSAR Fig. 3.2.3-12	Material Sheet 1 Calculation Sheet item 6.11
6.11.3 Below Neck Region	Stainless Steel 304 7.78 g/cm	FSAR Fig. 3.2.3-12	Material Sheet 1 Calculation Sheet item 6.11
6.12 Bottom Endplug Detail	See reference	FSAR Fig. 3.2.3-12	Diagram 2.2-32
6.13 Material and Weight of Bottom Endplug	Stainless Steel 304 14.0 g	FSAR Fig. 3.2.3-12	Material Sheet 1 Calculation Sheet item 6.13
6.14 Length of Inner Spacer Tube	363.09 cm	FSAR Fig. 3.2.3-12	
6.15 Diameters of Inner Spacer Tube	O.D. 0.601 cm I.D. 0.568 cm	FSAR Fig. 3.2.3-12	
6.16 Material & Weight per Unit Length of Inner Spacer Tube	Stainless Steel 304 0.24 g/cm	FSAR Fig. 3.2.3-12	Material Sheet 1 Calculation Sheet item 6.16
6.17 Length of Burnable Poison Absorber	362.41 cm	FSAR Fig. 3.2.3-12	Calculation Sheet item 6.4
6.18 Diameters of Burnable Poison Absorber	O.D. 1.006 cm I.D. 0.617 cm	FSAR Fig. 3.2.3-12	
6.19 Material & Weight per Unit Length of Burnable Poison Absorber	Borosilicate Glass 0.0603 g (nat B)/cm	FSAR Fig. 3.2.3-12	Material Sheet 6 Calculation Sheet item 6.19

REACTOR: ZION UNIT 2
CYCLES: 1 and 2

TABLE 2.2
PWR CORE AND COMPONENT DESCRIPTION

ITEMS	VALUES	SOURCES	REFERENCES
6.20 Weight of Natural Boron per Unit Length of Burnable Poison Absorber	0.0603 g/cm	FSAR Table 3.2.3-7	Calculation Sheet item 6.19
6.21 Length of Plenum	13.03 cm	FSAR Fig. 3.2.3-12	Calculation Sheet item 6.4
6.22 Plenum Fill Gas	Air		Calculation Sheet item 4.13

REACTOR: ZION UNIT 2
CYCLES: 1 and 2

TABLE 2.2
PWR CORE AND COMPONENT DESCRIPTION

ITEMS	VALUES	SOURCES	REFERENCES
7.0 SOURCE BEARING ASSEMBLY INSERT DETAIL			
7.1 Source Bearing Assembly Insert Configuration	-	-	-
7.1.1 Pu-Be Primary Source	See reference	RESAR-3 Fig. 4.2-13	Diagram 2.2-33(1)
7.1.2 Cf Primary Source	See reference	RESAR-3 Fig. 4.2-13	Diagram 2.2-33(2)
7.1.3 Sb-Be Secondary Source	See reference	RESAR-3 Fig. 4.2-14	Diagram 2.2-33(3)
7.2 Locations of Source Rods			
7.2.1 Cycle 1	See reference	SUR-1	Diagram 2.2-34(1)
7.2.2 Cycle 2	See reference	SUR-2	Diagram 2.2-34(2)
7.3 Height of Midplane of Source Capsule Above Bottom of Bottom Nozzle	-	-	
7.3.1 Pu-Be Primary Source	Approx. 102 cm	RESAR-3 Fig. 4.2-13	
7.3.2 Cf Primary Source	Approx. 102 cm	RESAR-3 Fig. 4.2-13	
7.3.3 Sb-Be Secondary Source	Approx. 179 cm	RESAR-3 Fig. 4.2-14 FSAR page 3.2.3-19	
7.4 Number of Source Rods per Source Bearing Assembly Insert	-	-	

REACTOR: ZION UNIT 2
CYCLES: 1 and 2

TABLE 2.2
PWR CORE AND COMPONENT DESCRIPTION

ITEMS	VALUES	SOURCES	REFERENCES
7.4.1 Pu-Be Primary Source	1	FSAR Fig. 3.2.1-6	
7.4.2 Cf Primary Source	1	FSAR Fig. 3.2.1-6	
7.4.3 Sb-Be Secondary Source	4	FSAR Fig. 3.2.1-6	
7.5 Number of Burnable Poison Rods per Source Bearing Assembly Insert	-	-	-
7.5.1 Pu-Be Primary Source	19	FSAR Fig. 3.2.1-6	
7.5.2 Cf Primary Source	19	FSAR Fig. 3.2.1-6	
7.5.3 Sb-Be Secondary Source	12	FSAR Fig. 3.2.1-5	
7.6 Number of Thimble Plugs per Source Bearing Assembly Insert	-	-	
7.6.1 Pu-Be Primary Source	0	RESAR-3 Fig. 4.2-13	
7.6.2 Cf Primary Source	0	RESAR-3 Fig. 4.2-13	
7.6.3 Sb-Be Secondary Source	4	RESAR-3 Fig. 4.2-14	
7.7 Source Bearing Rod Configurations	-	-	-
7.7.1 Pu-Be Primary Source	See reference	RESAR-3 Fig. 4.2-13	Diagram 2.2-35(1)

REACTOR: ZION UNIT 2
CYCLES: 1 and 2

TABLE 2.2
PWR CORE AND COMPONENT DESCRIPTION

ITEMS	VALUES	SOURCES	REFERENCES
7.7.2 Cf Primary Source	See reference	RESAR-3 Fig. 4.2-13	Diagram 2.2-35(2)
7.7.3 Sb-Be Secondary Source	See reference	RESAR-3 Fig. 4.2-14	Diagram 2.2-35(3)
7.8 Length of Source Rod Cladding Tube	-	-	-
7.8.1 Pu-Be Primary Source	Not available	None available	Calculation Sheet item 7.8
7.8.2 Cf Primary Source	Not available	None available	Calculation Sheet item 7.8
7.8.3 Sb-Be Secondary Source	Not available	None available	Calculation Sheet item 7.8
7.9 Diameters of Source Rod Cladding Tube	O.D. 1.095 cm I.D. 0.851 cm	RESAR-3 Fig 4.2-13 FSAR pg 3.2.3-19	
7.10 Material and Weight per Unit Length of Source Rod Cladding Tube	Stainless Steel 304 2.95 g/cm	FSAR pg 3.2.3-19	Material Sheet 1 Calculation Sheet item 7.10
7.11 Top Endplug Detail	Not available (see reference)	None available	Calculation Sheet item 7.8
7.12 Material and Weight of Top Endplug	Stainless Steel 304 Not available	None available	Material Sheet 1 Calculation Sheet item 7.12
7.13 Bottom Endplug Detail	Not available (see reference)	None available	Calculation Sheet item 7.8
7.14 Material and Weight of Bottom Endplug	Stainless Steel 304 Not available	None available	Material Sheet 1 Calculation Sheet items 7.8 & 7.12
7.15 Length of Primary Source Lower Spacer Tube	-	-	-

REACTOR: ZION UNIT 2
CYCLES: 1 and 2

TABLE 2.2
PWR CORE AND COMPONENT DESCRIPTION

ITEMS	VALUES	SOURCES	REFERENCES
7.15.1 Pu-Be Primary Source	Not available	None available	
7.15.2 Cf Primary Source	Not available	None available	
7.16 Length of Primary Source Upper Spacer Tube	-	-	
7.16.1 Pu-Be Primary Source	Not available	None available	
7.16.2 Cf Primary Source	Not available	None available	
7.17 Diameters of Primary Source Spacer Tubes	Not available	None available	
7.18 Material and Weight per Unit Length of Primary Source Spacer Tubes	Not available	None available	
7.19 Length of Primary Source Capsule	-	-	
7.19.1 Pu-Be Primary Source	61 cm	FSAR pg 3.2.3-19	
7.19.2 Cf Primary Source	5 cm	FSAR pg 3.2.3-19	
7.20 Diameter of Primary Source Capsule	Not available	None available	
7.21 Materials & Weights per Unit Length of Primary Source Capsules	-	-	
7.21.1 Pu-Be Primary Source	Not available	None available	

REACTOR: ZION UNIT 2
CYCLES: 1 and 2

TABLE 2.2
PWR CORE AND COMPONENT DESCRIPTION

ITEMS	VALUES	SOURCES	REFERENCES
7.21.2 Cf Primary Source	Not available	None available	
7.22 Length of Secondary Source Column	309.3 cm	FSAR pg 3.2.3-19	
7.23 Diameter of Secondary Source Column	Not available	None available	
7.24 Material & Weight per Unit Length of Secondary Source Column	Antimony-Beryllium Compact Not available	FSAR pg 3.2.3-19 None	Material Sheet 9
7.25 Source Rod Plenum Fill Gas	Air		Calculation Sheet item 4.13

REACTOR: ZION UNIT 2
CYCLES: 1 and 2

TABLE 2.2
PWR CORE AND COMPONENT DESCRIPTION

ITEMS	VALUES	SOURCES	REFERENCES
8.0 TOP REFLECTOR DETAILS			
8.1 Top Reflector Configuration	-	-	-
8.1.1 Fuel Assembly with Fully Withdrawn RCCA Insert	See reference		Diagram 2.2-36(1)
8.1.2 Fuel Assembly with Partially Inserted RCCA Insert	See reference		Diagram 2.2-36(2)
8.1.3 Fuel Assembly with Fully Inserted RCCA Insert	See reference		Diagram 2.2-36(3)
8.1.4 Fuel Assembly with Thimble Plugging Assembly Insert	See reference		Diagram 2.2-36(4)
8.1.5 Fuel Assembly with Burnable Poison Assembly Insert	See reference		Diagram 2.2-36(5)
8.1.6 Fuel Assembly with Primary Source Bearing Assembly Insert	See reference		Calculation Sheet item 8.1.6
8.1.7 Fuel Assembly with Secondary Source Bearing Assembly Insert	See reference		Calculation Sheet item 8.1.7

REACTOR: ZION UNIT 2

CYCLES: 1 and 2

TABLE 2.2

PWR CORE AND COMPONENT DESCRIPTION

ITEM	ZONE	Distance Above Bottom of Bottom Nozzle (cm)	Material Volume Fractions: Water	Stainless Steel	Carbon Steel	Inconel	Zirc-alloy	RCC Absorber	B/P Absorber	UO_2	Plenum	Calculation Sheet
8.2 Material Volume Fractions in Top Reflector												
		398.3										
8.2.1 Fuel Assembly with Fully Withdrawn RCCA Insert	A	396.8	.3795	.5944	-	-	-	.0261	-	-	-	Item 8.2.1
	B	394.0 + Δ (2) 392.6 + Δ (1&3)	.9422	.0244	-	-	.0073	.0261	-	-	-	
	C	392.2 + Δ (2) 390.9 + Δ (1&3)	.6308	.0244	-	-	.3187	.0261	-	-	-	
	D	391.3	.5440	.0244	.0698	-	.0941	.0261	-	-	.2416	
	E	387.5	.4863	.0244	.0698	.0577	.0941	.0261	-	-	.2416	
	F	382.0	.5514	.0170	.0698	-	.0941	.0261	-	-	.2416	
	G	379.0	.5669	.0276	.0698	-	.0941	-	-	-	.2416	
	H	374.5 + Δ (1) 373.0 + Δ (2) 371.4 + Δ (3)	.5957	-	.0698	-	.0941	-	-	-	.2416	

REACTOR: ZION UNIT 2

CYCLES: 1 and 2

TABLE 2.2

PWR CORE AND COMPONENT DESCRIPTION

ITEM	ZONE	Distance Above Bottom of Bottom Nozzle (cm)	Material Volume Fractions: Water	Stainless Steel	Carbon Steel	Incomel	Zirc-alloy	RCC Absorber	B/P Absorber	UO_2	Plenum	Calculation Sheet
8.2.2 Fuel Assembly with Partially Inserted RCCA Insert												Item 8.2.2
		398.3										
	A		.3795	.5944	-	-	-	.0261	-	-	-	
		396.8										
	B	394.0 + Δ (2) 392.6 + Δ (1&3)	.9422	.0244	-	-	.0073	.0261	-	-	-	
	C	392.2 + Δ (2) 390.9 + Δ (1&3)	.6308	.0244	-	-	.3187	.0261	-	-	-	
	D		.5440	.0244	.0698	-	.0941	.0261	-	-	.2416	
		391.3										
	E		.4863	.0170	.0698	.0577	.0941	.0261	-	-	.2416	
		387.5										
	F	374.5 + Δ (1) 373.0 + Δ (2) 371.4 + Δ (3)	.5514	.0276	.0698	-	.0941	.0261	-	-	.2416	

REACTOR: ZION UNIT 2

CYCLES: 1 and 2

TABLE 2.2

PWR CORE AND COMPONENT DESCRIPTION

ITEM	ZONE	Distance Above Bottom of Bottom Nozzle (cm)	Material Volume Fractions: Water	Stainless Steel	Carbon Steel	Inconel	Zirc-alloy	RCC Absorber	B/P Absorber	UO_2	Plenum	Calculation Sheet
8.2.3 Fuel Assembly with Fully Inserted RCCA Insert												Item 8.2.3
		398.3										
	A		.3842	.6158	-	-	-	-	-	-	-	
		396.8										
	B	394.0 + Δ (2) 392.6 + Δ (1&3)	.9469	.0458	-	-	.0073	-	-	-	-	
	C	392.2 + Δ (2) 390.9 + Δ (1&3)	.6355	.0458	-	-	.3187	-	-	-	-	
	D	391.3	.5487	.0458	.0698	-	.0941	-	-	-	.2416	
	E	387.5	.4910	.0458	.0698	.0577	.0941	-	-	-	.2416	
	F	382.8	.5561	.0384	.0698	-	.0941	-	-	-	.2416	
	G	377.6	.5511	.0170	.0698	-	.0941	-	-	-	.2680	
	H	374.5 + Δ (1) 373.0 + Δ (2) 371.4 + Δ (3)	.5514	.0170	.0698	-	.0941	.0261	-	-	.2416	

REACTOR: ZION UNIT 2

CYCLES: 1 and 2

TABLE 2.2

PWR CORE AND COMPONENT DESCRIPTION

ITEM	ZONE	Distance Above Bottom of Bottom Nozzle (cm)	Material Volume Fractions: Water	Stainless Steel	Carbon Steel	Inconel	Zirc-alloy	RCC Absorber	B/P Absorber	UO_2	Plenum	Calculation Sheet
8.2.4 Fuel Assembly with Thimble Plugging Assembly Insert												Item 8.2.4
		398.3										
	A		.4119	.5881	-	-	-	-	-	-	-	
		396.8										
	B		.9746	.0181	-	-	.0073	-	-	-	-	
		394.0 + Δ (2) 392.6 + Δ (1&3)										
	C		.6632	.0181	-	-	.3187	-	-	-	-	
		394.3										
	D		.6195	.0618	-	-	.3187	-	-	-	-	
		392.2 + Δ (2) 390.9 + Δ (1&3)										
	E		.5327	.0618	.0698	-	.0941	-	-	-	.2416	
		391.3										
	F		.4750	.0619	.0698	.0577	.0941	-	-	-	.2416	
		387.5										
	G		.5401	.0544	.0698	-	.0941	-	-	-	.2416	
		382.1										
	H		.5945	-	.0698	-	.0941	-	-	-	.2416	
		374.5 + Δ (1) 373.0 + Δ (2) 371.4 + Δ (3)										

REACTOR: ZION UNIT 2

CYCLES: 1 and 2

TABLE 2.2

PWR CORE AND COMPONENT DESCRIPTION

ITEM	ZONE	Distance Above Bottom of Bottom Nozzle (cm)	Material Volume Fractions: Water	Stainless Steel	Carbon Steel	Inconel	Zirc-alloy	RCC Absorber	B/P Absorber	UO_2	Plenum	Calculation Sheet
8.2.5 Fuel Assembly with Burnable Poison Assembly Insert												
		398.3										
8.2.5.1 20 B/P Rods	A	396.8	.4119	.5881	-	-	-	-	-	-	-	Item 8.2.5.1
	B	394.0 + Δ (2) 392.6 + Δ (1&3)	.9746	.0181	-	-	.0073	-	-	-	-	
	C	394.3	.6632	.0181	-	-	.3187	-	-	-	-	
	D	392.2 + Δ (2) 390.9 + Δ (1&3)	.6195	.0618	-	-	.3187	-	-	-	-	
	E	392.9	.5764	.0181	.0698	-	.0941	-	-	-	.2416	
	F	391.3	.5448	.0146	.0698	-	.0941	-	-	-	.2767	
	G	387.5	.4871	.0146	.0698	.0577	.0941	-	-	-	.2767	
	H	382.1	.5873	.0072	.0698	-	.0941	-	-	-	.2416	
	I	379.9	.5873	.0072	.0698	-	.0941	-	-	-	.2416	
	J	374.5 + Δ (1) 373.0 + Δ (2) 371.4 + Δ (3)	.5536	.0085	.0698	-	.0941	-	.0214	-	.2526	

REACTOR: ZION UNIT 2

CYCLES: 1 and 2

TABLE 2.2

PWR CORE AND COMPONENT DESCRIPTION

ITEM	ZONE	Distance Above Bottom of Bottom Nozzle (cm)	Material Volume Fractions: Water	Stainless Steel	Carbon Steel	Inconel	Zirc-alloy	RCC Absorber	B/P Absorber	UO_2	Plenum	Calculation Sheet
		398.3										
8.2.5.2 16 B/P Rods	A		.4119	.5881	-	-	-	-	-	-	-	Item 8.2.5.2
		396.8										
	B	394.0 + Δ (2) 392.6 + Δ (1&3)	.9746	.0181	-	-	.0073	-	-	-	-	
	C		.6632	.0181	-	-	.3187	-	-	-	-	
		394.3										
	D	392.2 + Δ (2) 390.9 + Δ (1&3)	.6195	.0681	-	-	.3187	-	-	-	-	
	E		.5764	.0181	.0698	-	.0941	-	-	-	.2416	
		392.9										
	F		.5404	.0260	.0698	-	.0941	-	-	-	.2697	
		391.3										
	G		.4827	.0260	.0698	.0577	.0941	-	-	-	.2697	
		387.5										
	H		.5478	.0186	.0698	-	.0941	-	-	-	.2697	
		382.1										
	I		.5587	.0077	.0698	-	.0941	-	-	-	.2697	
		379.9										
	J	374.5 + Δ (1) 373.0 + Δ (2) 371.4 + Δ (3)	.5599	.0087	.0698	-	.0941	-	.0171	-	.2504	

REACTOR: ZION UNIT 2

CYCLES: 1 and 2

TABLE 2.2

PWR CORE AND COMPONENT DESCRIPTION

ITEM	ZONE	Distance Above Bottom of Bottom Nozzle (cm)	Material Volume Fractions: Water	Stainless Steel	Carbon Steel	Inconel	Zirc-alloy	RCC Absorber	B/P Absorber	UO_2	Plenum	Calculation Sheet
8.2.5.3 12 B/P Rods		398.3										Item 8.2.5.3
	A	396.8	.4119	.5881	-	-	-	-	-	-	-	
	B	394.0 + Δ (2) 392.6 + Δ (1&3)	.9746	.0181	-	-	.0073	-	-	-	-	
	C	394.3	.6632	.0181	-	-	.3187	-	-	-	-	
	D	392.2 + Δ (2) 390.9 + Δ (1&3)	.6195	.0681	-	-	.3187	-	-	-	-	
	E	392.9	.5764	.0181	.0698	-	.0941	-	-	-	.2416	
	F	391.3	.5399	.0335	.0698	-	.0941	-	-	-	.2627	
	G	387.5	.4822	.0335	.0698	.0577	.0941	-	-	-	.2627	
	H	382.1	.5473	.0261	.0698	-	.0941	-	-	-	.2627	
	I	379.9	.5691	.0043	.0698	-	.0941	-	-	-	.2627	
	J	374.5 + Δ (1) 373.0 + Δ (2) 371.4 + Δ (3)	.5700	.0051	.0698	-	.0941	-	.0128	-	.2482	

REACTOR: ZION UNIT 2

CYCLES: 1 and 2

TABLE 2.2

PWR CORE AND COMPONENT DESCRIPTION

ITEM	ZONE	Distance Above Bottom of Bottom Nozzle (cm)	Material Volume Fractions: Water	Stainless Steel	Carbon Steel	Inconel	Zirc-alloy	RCC Absorber	B/P Absorber	UO_2	Plenum	Calculation Sheet
8.2.5.4 9 B/P Rods												Item 8.2.5.4
		398.3										
	A		.4119	.5881	-	-	-	-	-	-	-	
		396.8										
	B	394.0 + Δ (2) 392.6 + Δ (1&3)	.9746	.0181	-	-	.0073	-	-	-	-	
	C	394.3	.6632	.3181	-	-	.3187	-	-	-	-	
	D	392.2 + Δ (2) 390.9 + Δ (1&3)	.6195	.0681	-	-	.3187	-	-	-	-	
	E	392.9	.5764	.0181	.0698	-	.0941	-	-	-	.2416	
	F	391.3	.5382	.0405	.0698	-	.0941	-	-	-	.2574	
	G	387.5	.4805	.0405	.0698	.0577	.0941	-	-	-	.2574	
	H	382.1	.5456	.0331	.0698	-	.0941	-	-	-	.2574	
	I	379.9	.5755	.0032	.0698	-	.0941	-	-	-	.2574	
	J	374.5 + Δ (1) 373.0 + Δ (2) 371.4 + Δ (3)	.5761	.0038	.0698	-	.0941	-	.0096	-	.2466	

REACTOR: ZION UNIT 2

CYCLES: 1 and 2

TABLE 2.2

PWR CORE AND COMPONENT DESCRIPTION

ITEM	ZONE	Distance Above Bottom of Bottom Nozzle (cm)	Material Volume Fractions: Water	Stainless Steel	Carbon Steel	Inconel	Zirc-alloy	RCC Absorber	B/P Absorber	UO_2	Plenum	Calculation Sheet
8.2.5.5 8 B/P Rods												
		398.3										
	A		.4119	.5881	-	-	-	-	-	-	-	8.2.5.5
		396.8										
	B	394.0 + Δ (2) 392.6 + Δ (183)	.9746	.0181	-	-	.0073	-	-	-	-	
	C		.6632	.0181	-	-	.3187	-	-	-	-	
		394.3										
	D		.6195	.0681	-	-	.3187	-	-	-	-	
		392.2 + Δ (2) 390.9 + Δ (183)										
	E		.5764	.0181	.0698	-	.0941	-	-	-	.2416	
		392.9										
	F		.5376	.0429	.0698	-	.0941	-	-	-	.2556	
		391.3										
	G		.4799	.0429	.0698	.0577	.0941	-	-	-	.2556	
		387.5										
	H		.5450	.0355	.0698	-	.0941	-	-	-	.2556	
		382.1										
	I		.5776	.0029	.0698	-	.0941	-	-	-	.2556	
		379.9										
	J	374.5 + Δ (1) 373.0 + Δ (2) 371.4 + Δ (3)	.5781	.0034	.0698	-	.0941	-	.0086	-	.2460	

REACTOR: ZION UNIT 2

CYCLES: 1 and 2

TABLE 2.2

PWR CORE AND COMPONENT DESCRIPTION

ITEM	ZONE	Distance Above Bottom of Bottom Nozzle (cm)	Material Volume Fractions									Calculation Sheet
			Water	Stainless Steel	Carbon Steel	Inconel	Zirc-alloy	RCC Absorber	B/P Absorber	UO_2	Plenum	
8.2.6 Fuel Assembly with Primary Source Bearing Assembly Insert												Item 8.2.6
8.2.7 Fuel Assembly with Secondary Source Bearing Assembly Insert												Item 8.2.7

REACTOR: ZION UNIT 2
CYCLES: 1 and 2

TABLE 2.2
PWR CORE AND COMPONENT DESCRIPTION

ITEMS	VALUES	SOURCES	REFERENCES
9.0 BOTTOM REFLECTOR DETAILS			
9.1 Bottom Reflector Configuration	-	-	-
9.1.1 Fuel Assembly with Fully Withdrawn RCCA Insert	See reference		Diagram 2.2-37(1)
9.1.2 Fuel Assembly with Partially Inserted RCCA Insert	See reference		Diagram 2.2-37(1)
9.1.3 Fuel Assembly with Fully Inserted RCCA Insert	See reference		Diagram 2.2-37(2)
9.1.4 Fuel Assembly with Thimble Plugging Assembly Insert	See reference		Diagram 2.2-37(1)
9.1.5 Fuel Assembly with Burnable Poison Assembly Insert	See reference		Diagram 2.2-37(3)
9.1.6 Fuel Assembly with Primary Source Bearing Assembly Insert	See reference		Diagram 2.2-37(3)
9.1.7 Fuel Assembly with Secondary Source Bearing Assembly Insert	See reference		Diagram 2.2-37(3)

REACTOR: ZION UNIT 2

CYCLES: 1 and 2

TABLE 2.2

PWR CORE AND COMPONENT DESCRIPTION

ITEM	ZONE	Distance Above Bottom of Bottom Nozzle (cm)	Material Volume Fractions: Water	Stainless Steel	Carbon Steel	Inconel	Zirc-alloy	RCC Absorber	B/P Absorber	UO_2	Plenum	Calculation Sheet
9.2 Material Volume Fractions in Bottom Reflector												
		15.3										Items
9.2.1 Fuel Assembly with Fully Withdrawn RCCA Insert	R		.6290	.0074	-	.0577	.0941	-	-	.2958	.0160	9.2.1
		11.5										9.2.2
	S		.5867	.0074	-	-	.0941	-	-	.2958	.0160	9.2.4
		8.7 + Δ										
9.2.2 Fuel Assembly with Partially Inserted RCCA Insert	T		.6739	.0074	-	-	.3187	-	-	-	-	
		9.2										
	U		.6300	.0074	-	-	.3626	-	-	-	-	
		7.0 + Δ										
9.2.4 Fuel Assembly with Thimble Plugging Assembly Insert	V		.9314	.0174	-	-	.0512	-	-	-	-	
		7.0										
	W		.3796	.6204	-	-	-	-	-	-	-	
		4.9										
	X		.8583	.1417	-	-	-	-	-	-	-	
		1.9										
	Y		.8896	.1104	-	-	-	-	-	-	-	
		0										
	Z		.3796	.6204	-	-	-	-	-	-	-	
		-5.0										

REACTOR: ZION UNIT 2

CYCLES: 1 and 2

TABLE 2.2

PWR CORE AND COMPONENT DESCRIPTION

ITEM	ZONE	Distance Above Bottom of Bottom Nozzle (cm)	Material Volume Fractions: Water	Stainless Steel	Carbon Steel	Inconel	Zirc-alloy	RCC Absorber	B/P Absorber	UO_2	Plenum	Calculation Sheet
9.2.3 Fuel Assembly with Fully Inserted RCCA Insert												
		16.9										
	P		.5665	.0276	-	-	.0941	-	-	.2958	.0160	Item 9.2.3
		15.3										
	Q		.5014	.0350	-	.0577	.0941	-	-	.2958	.0160	
		13.9										
	R		.5290	.0074	-	.0577	.0941	-	-	.2958	.0160	
		11.5										
	S		.5867	.0074	-	-	.0941	-	-	.2958	.0160	
		8.7 + Δ										
	T		.6739	.0074	-	-	.3187	-	-	-	-	
		9.2										
	U		.6300	.0074	-	-	.3626	-	-	-	-	
		7.0 + Δ										
	V		.9314	.0174	-	-	.0512	-	-	-	-	
		0										
	W		.3796	.6204	-	-	-	-	-	-	-	
		4.9										
	X		.8583	.1417	-	-	-	-	-	-	-	
		1.9										
	Y		.8896	.1104	-	-	-	-	-	-	-	
		0										
	Z		.3796	.6204	-	-	-	-	-	-	-	
		-5.0										

REACTOR: ZION UNIT 2

CYCLES: 1 and 2

TABLE 2.2

PWR CORE AND COMPONENT DESCRIPTION

ITEM	ZONE	Distance Above Bottom of Bottom Nozzle (cm)	Material Volume Fractions: Water	Stainless Steel	Carbon Steel	Inconel	Zirc-alloy	RCC Absorber	B/P Absorber	UO_2	Plenum	Calculation Sheet
9.2.5 Fuel Assembly with Burnable Poison Assembly Insert												
9.2.5.1 20 B/P Rods		16.9										Item 9.2.5.1
	P		.5665	.0276	-	-	.0941	-	-	.2959	.0160	
		15.3										
	Q		.5014	.0350	-	.0577	.0941	-	-	.2958	.0160	
		13.9										
	R		.5290	.0074	-	.0577	.0941	-	-	.2958	.0160	
		11.5										
	S		.5867	.0074	-	-	.0941	-	-	.2958	.0160	
		8.7 + Δ										
	T		.6739	.0074	-	-	.3187	-	-	-	-	
		9.2										
	U		.6300	.0074	-	-	.3626	-	-	-	-	
		7.0 + Δ										
	V		.9314	.0174	-	-	.0512	-	-	-	-	
		7.0										
	W		.3796	.6204	-	-	-	-	-	-	-	
		4.9										
	X		.8583	.1417	-	-	-	-	-	-	-	
		1.9										
	Y		.8896	.1104	-	-	-	-	-	-	-	
		0										
	Z		.3796	.6204	-	-	-	-	-	-	-	
		-5.0										

REACTOR: ZION UNIT 2

CYCLES: 1 and 2

TABLE 2.2

PWR CORE AND COMPONENT DESCRIPTION

ITEM	ZONE	Distance Above Bottom of Bottom Nozzle (cm)	Material Volume Fractions: Water	Stainless Steel	Carbon Steel	Inconel	Zirc-alloy	RCC Absorber	B/P Absorber	UO_2	Plenum	Calculation Sheet
9.2.5.2 16 B/P Rods		16.9										Item 9.2.5.2
	P	15.3	.5720	.0221	-	-	.0941	-	-	.2958	.0160	
	Q	13.9	.5069	.0295	-	.0577	.0941	-	-	.2958	.0160	
	R	11.5	.5290	.0074	-	.0577	.0941	-	-	.2958	.0160	
	S	8.7 + Δ	.5867	.0074	-	-	.0941	-	-	.2958	.0160	
	T	9.2	.6739	.0074	-	-	.3187	-	-	-	-	
	U	7.0 + Δ	.6300	.0074	-	-	.3626	-	-	-	-	
	V	7.0	.9314	.0174	-	-	.0512	-	-	-	-	
	W	4.9	.3796	.6204	-	-	-	-	-	-	-	
	X	1.9	.8583	.1417	-	-	-	-	-	-	-	
	Y	0	.8896	.1104	-	-	-	-	-	-	-	
	Z	-5.0	.3796	.6204	-	-	-	-	-	-	-	

REACTOR: ZION UNIT 2

CYCLES: 1 and 2

TABLE 2.2

PWR CORE AND COMPONENT DESCRIPTION

ITEM	ZONE	Distance Above Bottom of Bottom Nozzle (cm)	Material Volume Fractions: Water	Stainless Steel	Carbon Steel	Inconel	Zirc-alloy	RCC Absorber	B/P Absorber	UO_2	Plenum	Calculation Sheet
9.2.5.3 12 B/P Rods		16.9										Items 9.2.5.3 and 9.2.7
	P		.5775	.0166	-	-	.0941	-	-	.2958	.0160	
		15.3										
9.2.7	Q		.5124	.0240	-	.0577	.0941	-	-	.2958	.0160	
		13.9										
	R		.5290	.0074	-	.0577	.0941	-	-	.2958	.0160	
		11.5										
	S		.5867	.0074	-	-	.0941	-	-	.2958	.0160	
		8.7 + Δ										
	T		.6739	.0074	-	-	.3187	-	-	-	-	
		9.2										
	U		.6300	.0074	-	-	.3626	-	-	-	-	
		7.0 + Δ										
	V		.9314	.0174	-	-	.0512	-	-	-	-	
		7.0										
	W		.3796	.6204	-	-	-	-	-	-	-	
		4.9										
	X		.8583	.1417	-	-	-	-	-	-	-	
		1.9										
	Y		.8896	.1104	-	-	-	-	-	-	-	
		0										
	Z		.3796	.6204	-	-	-	-	-	-	-	
		-5.0										

REACTOR: ZION UNIT 2

CYCLES: 1 and 2

TABLE 2.2

PWR CORE AND COMPONENT DESCRIPTION

ITEM	ZONE	Distance Above Bottom of Bottom Nozzle (cm)	Material Volume Fractions: Water	Stainless Steel	Carbon Steel	Inconel	Zirc-alloy	RCC Absorber	B/P Absorber	UO_2	Plenum	Calculation Sheet
9.2.5.4 9 B/P Rods		16.9										Item 9.2.5.4
	P	15.3	.5817	.0124		-	.0941	-	-	.2958	.0160	
	Q	13.9	.5166	.0198	-	.0577	.0941	-	-	.2958	.0160	
	R	11.5	.5290	.0074	-	.0577	.0941	-	-	.2958	.0160	
	S	8.7 + Δ	.5867	.0074	-	-	.0941	-	-	.2958	.0160	
	T	9.2	.6739	.0074	-	-	.3187	-	-	-	-	
	U	7.0 + Δ	.6300	.0074	-	-	.3626	-	-	-	-	
	V	7.0	.9314	.0174	-	-	.0512	-	-	-	-	
	W	4.9	.3796	.6204	-	-	-	-	-	-	-	
	X	1.9	.8583	.1417	-	-	-	-	-	-	-	
	Y	0	.8896	.1104	-	-	-	-	-	-	-	
	Z	-5.0	.3796	.6204	-	-	-	-	-	-	-	

REACTOR: ZION UNIT 2

CYCLES: 1 and 2

TABLE 2.2

PWR CORE AND COMPONENT DESCRIPTION

ITEM	ZONE	Distance Above Bottom of Bottom Nozzle (cm)	Material Volume Fractions									Calculation Sheet
			Water	Stainless Steel	Carbon Steel	Inconel	Zirc-alloy	RCC Absorber	B/P Absorber	UO_2	Plenum	
9.2.5.5 8 B/P Rods												Item 9.2.5.5
		16.9										
	P		.5831	.0110	-	-	.0941	-	-	.2958	.0160	
		15.3										
	Q		.5180	.0184	-	.0577	.0941	-	-	.2958	.0160	
		13.9										
	R		.5290	.0074	-	.0577	.0941	-	-	.2958	.0160	
		11.5										
	S		.5867	.0074	-	-	.0941	-	-	.2958	.0160	
		8.7 + Δ										
	T		.6739	.0074	-	-	.3187	-	-	-	-	
		9.2										
	U		.6300	.0074	-	-	.3626	-	-	-	-	
		7.0 + Δ										
	V		.9314	.0174	-	-	.0512	-	-	-	-	
		7.0										
	W		.3796	.6204	-	-	-	-	-	-	-	
		4.9										
	X		.8583	.1417	-	-	-	-	-	-	-	
		1.9										
	Y		.8896	.1104	-	-	-	-	-	-	-	
		0										
	Z		.3796	.6204	-	-	-	-	-	-	-	
		-5.0										

REACTOR: ZION UNIT 2

CYCLES: 1 and 2

TABLE 2.2

PWR CORE AND COMPONENT DESCRIPTION

ITEM	ZONE	Distance Above Bottom of Bottom Nozzle (cm)	Material Volume Fractions									Calculation Sheet
			Water	Stainless Steel	Carbon Steel	Inconel	Zirc-alloy	RCC Absorber	B/P Absorber	UO_2	Plenum	
9.2.6 Fuel Assembly with Primary Source Bearing Assembly Insert												Item 9.2.6
		16.9										
	P		.5679	.0262	-	-	.0941	-	-	.2958	.0160	
		15.3										
	Q		.5028	.0336	-	.0577	.0941	-	-	.2958	.0160	
		13.9										
	R		.5290	.0074	-	.0577	.0941	-	-	.2958	.0160	
		11.5										
	S		.5867	.0074	-	-	.0941	-	-	.2958	.0160	
		8.7 + Δ										
	T		.6739	.0074	-	-	.3187	-	-	-	-	
		9.2										
	U		.6300	.0074	-	-	.3626	-	-	-	-	
		7.0 + Δ										
	V		.9314	.0174	-	-	.0512	-	-	-	-	
		7.0										
	W		.3796	.6204	-	-	-	-	-	-	-	
		4.9										
	X		.8583	.1417	-	-	-	-	-	-	-	
		1.9										
	Y		.8896	.1104	-	-	-	-	-	-	-	
		0										
	Z		.3796	.6204	-	-	-	-	-	-	-	
		-5.0										

REACTOR: ZION UNIT 2
CYCLES: 1 and 2

TABLE 2.2
PWR CORE AND COMPONENT DESCRIPTION

ITEMS	VALUES	SOURCES	REFERENCES
10.0 RADIAL REFLECTOR DETAILS			
10.1 Radial Reflector Configuration	See reference	FSAR Fig. 3.2.3-1 & Table 3.2.3-1; Fig. 4.2-2 & Table 4.2-1	Diagram 2.2-38
10.2 Baffle Thickness	Approx. 3 cm	RESAR-3 (3-loop) Fig. 4.2-4	
10.3 Baffle Material	Stainless Steel 304	FSAR pg 3.2.3-3	Material Sheet 1
10.4 Core Barrel Diameters	I.D. 375.9 cm O.D. 387.4 cm	FSAR Table 3.2.3-1	
10.5 Core Barrel Material	Stainless Steel 304	FSAR pg 3.2.3-3	Material Sheet 1
10.6 Thermal Shield Diameters	I.D. 402.6 cm O.D. 416.6 cm	FSAR Table 3.2.3-1	
10.7 Thermal Shield Material	Stainless Steel 304	FSAR pg 3.2.3-3	Material Sheet 1
10.8 Reactor Vessel Inside Diameter	439.7 cm	FSAR Fig 4.2-2	
10.9 Reactor Vessel Base Metal	Low Alloy Steel SA-302 grade B	FSAR Table 1.4-1	Material Sheet 2
10.10 Reactor Vessel Inner Clad Thickness	0.396 cm (minimum)	FSAR Fig 4.2-2	
10.11 Reactor Vessel Inner Clad Material	SS 304 or equivalent	FSAR Table 4.2-1	

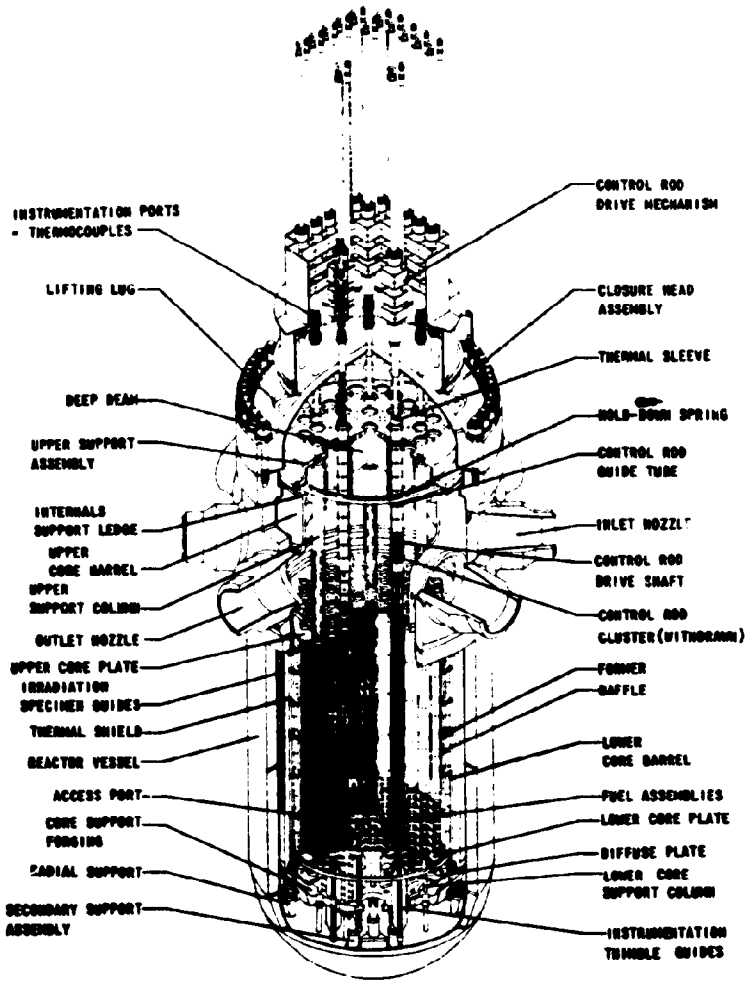

Diagram 2.2-1(1) Reactor General Configuration

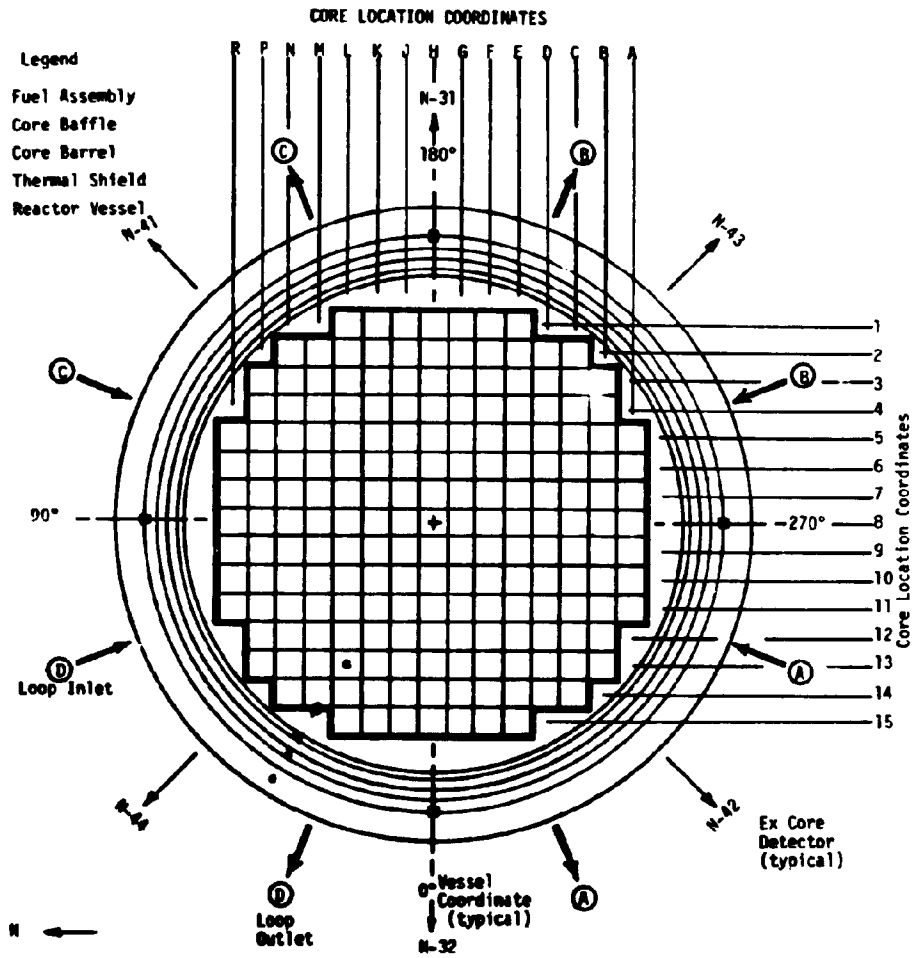

Diagram 2.2-1 (2) Reactor Plan View Correlating the Alphanumeric Fuel Assembly Locations with the Excore Instrumentation and Coolant Loop Inlet and Outlet Locations

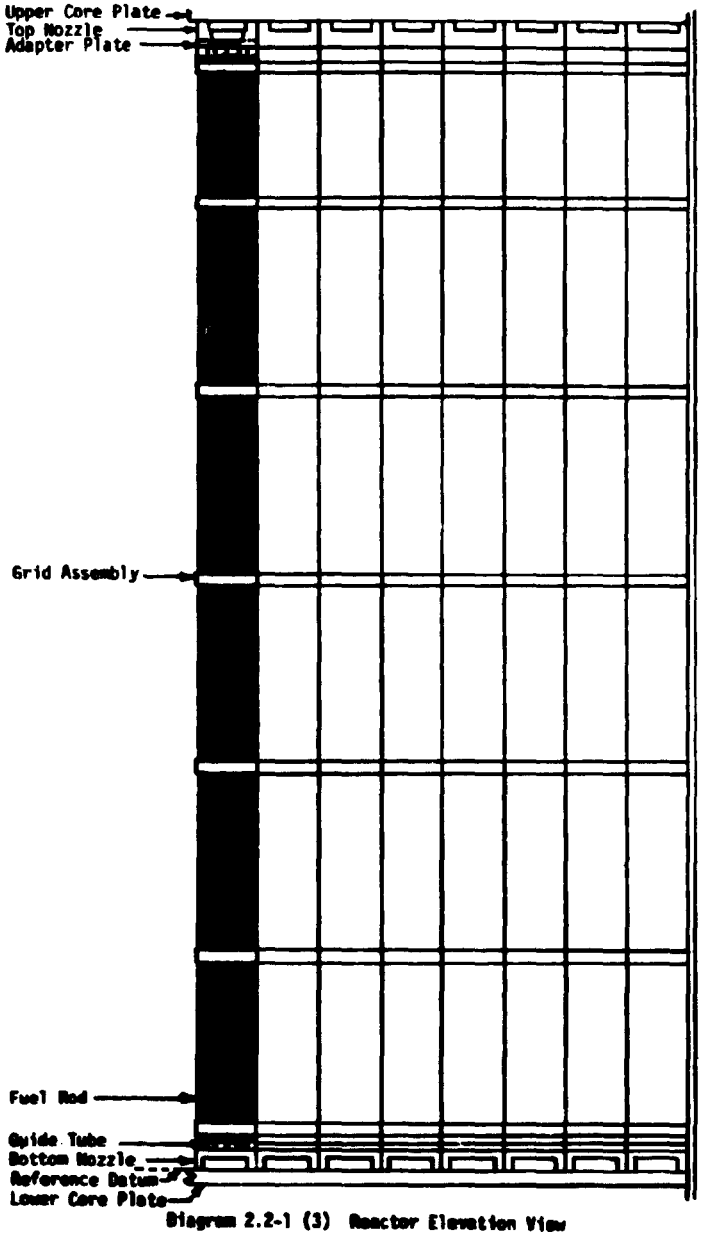

Diagram 2.2-1 (3) Reactor Elevation View

	R	P	N	M	L	K	J	H	G	F	E	D	C	B	A	
1					3	3	3	3	3	3	3					1
2			3	3	3	1	3	1	3	1	3	3	3			2
3		3	3	2	1	2	1	2	1	2	1	2	3	3		3
4		2	2	2	2	1	2	1	2	1	2	2	2	3		4
5	3	3	1	2	1	2	1	2	1	2	1	2	1	3	3	5
6	3	1	2	1	2	1	2	1	2	1	2	1	2	1	3	6
7	3	3	1	2	1	2	1	2	1	2	1	2	1	3	3	7
8	3	1	2	1	2	1	2	1	2	1	2	1	2	1	3	8
9	3	3	1	2	1	2	1	2	1	2	1	2	1	3	3	9
10	3	1	2	1	2	1	2	1	2	1	2	1	2	1	3	10
11	3	3	1	2	1	2	1	2	1	2	1	2	1	3	3	11
12		3	2	2	2	1	2	1	2	1	2	2	2	3		12
13		3	3	2	1	2	1	2	1	2	1	2	3	3		13
14			3	3	3	1	3	1	3	1	3	3	3			14
15					3	3	3	3	3	3	3					15
	R	P	N	M	L	K	J	H	G	F	E	D	C	B	A	

Symbol	Region	Enrichment (w/o)	No. of Assemblies
1	1	2.248	65
2	2	2.789	64
3	3	3.292	64

DIAGRAM 2.2-2(1) Locations of Fuel Assemblies by Type-Cycle 1

	R	P	N	M	L	K	J	H	G	F	E	D	C	B	A	
1					4	4	4	4	4	4	4					1
2			4	4	4	2	4	2	4	2	4	4	4			2
3		4	3	1	2	2	3	2	3	2	2	2	3	4		3
4		4	2	3	3	2	2	3	2	2	3	3	2	4		4
5	4	4	2	3	2	3	3	2	3	3	2	3	2	4	4	5
6	4	2	2	2	3	1	3	3	3	1	3	2	2	2	4	6
7	4	4	3	2	3	3	3	3	3	3	3	2	3	4	4	7
8	4	2	2	3	2	3	3	1	3	3	2	3	2	2	4	8
9	4	4	3	2	3	3	3	3	3	3	3	2	3	4	4	9
10	4	2	2	2	3	1	3	3	3	1	3	2	2	2	4	10
11	4	4	2	3	2	3	3	2	3	3	2	3	2	4	4	11
12		4	2	3	3	2	2	3	2	2	3	3	2	4		12
13		4	3	2	2	2	3	2	3	2	2	2	3	4		13
14			4	4	4	2	4	2	4	2	4	4	4			14
15					4	4	4	4	4	4	4					15
	R	P	N	M	L	K	J	H	G	F	E	D	C	B	A	

Symbol	Region	Enrichment (w/o)	No. of Assemblies
1	1	(partially depleted)	6
2	2	(partially depleted)	63
3	3	(partially depleted)	64
4	4	3.063	60

DIAGRAM 2.2-2(2) Locations of Fuel Assemblies by Type-Cycle 2

	R	P	N	M	L	K	J	H	G	F	E	D	C	B	A	
1					C27P	C43P	C60P	C12P	C07P	C50P	C26P					1
2			C36P	C32P	C54P	A38R	C01P	A22R	C04P	A16R	C28P	C02P	C63R			2
3		C56P	C51P	B62P	A30R	B61P	A40R	B60P	A42R	B59P	A33R	B21P	C15P	C17P		3
4		C47P	B09P	B51P	B20P	A43R	B36P	A52R	B45P	A01R	B15P	B57P	B06P	C05P		4
5	C06P	C42P	A49R	B29P	A51R	B02P	A32R	B48P	A23R	B03P	A14R	B26P	A28R	C25P	C45P	5
6	C38P	A06R	B18P	A05R	B42P	A41R	B33P	A26R	B13P	A10R	B50P	A46R	B54P	A62R	C34P	6
7	C41P	C03P	A13R	B53P	A53R	B12P	A15R	B55P	A03R	B34P	A63R	B23P	A61R	C55P	C40P	7
8	C22P	A37R	B43P	A36R	B38P	A60R	B14P	A29R	B19P	A35R	B39P	A21R	B37P	A24R	C13P	8
9	C20P	C61P	A58R	B05P	A64R	B31P	A47R	B46P	A44R	B10P	A56R	B49P	A48R	C11P	C24P	9
10	C09P	A02R	B52P	A17R	B41P	A18R	B11P	A11R	B30P	A55R	B40P	A04R	B56P	A39R	C39P	10
11	C53P	C08P	A25R	B28P	A50R	B01P	A27R	B47P	A20R	B04P	A59R	B27P	A65R	C64P	C49P	11
12		C19P	B08P	B64P	B17P	A31R	B35P	A12R	B44P	A07R	B16P	B25P	B07P	C18P		12
13		C35P	C59P	B24P	A08R	B63P	A57R	B32P	A45R	B58P	A54R	B22P	C33P	C46P		13
14			C16P	C23P	C21P	A09R	C31P	A34R	C30P	A19R	C62P	C57P	C48P			14
15					C44P	C14P	C52P	C10P	C37P	C58P	C29P					15
	R	P	N	M	L	K	J	H	G	F	E	D	C	B	A	

A = Region 1 Fuel
B = Region 2 Fuel
C = Region 3 Fuel

DIAGRAM 2.2-3(1) Locations of Fuel Assemblies by Serial Number-Cycle 1

	R	P	N	M	L	K	J	H	G	F	E	D	C	B	A	
1					P15	P57	P06	P56	P01	P35	P37					1
2			P51	P50	P39	B36P J-4	P28	B51P M-4	P08	B45P G-4	P26	P18	P43			2
3		P48	C52P J-15	A06R P-6	B02P K-5	B33P J-6	C01P J-2	B60P H-3	C04P G-2	B13P G-6	B03P F-5	B21P D-3	C41P R-7	P52		3
4		P55	B09P N-4	C12P H-1	C36P N-2	B61P K-3	B20P L-4	C33P C-13	B15P E-4	B59P F-3	C63P C-2	C13P A-8	B06P C-4	P38		4
5	P40	P58	B42P L-6	C56P P-3	B55P H-7	C43P K-1	C29P E-15	B48P H-5	C44P L-15	C50P F-1	B19P G-8	C17P B-3	B50P E-6	P17	P49	5
6	P13	B53P M-7	B12P K-7	B18P N-6	C38P R-6	A38R K-2	C54P L-2	C60P J-1	C28P E-2	A62R B-6	C34P A-6	B54P C-6	B34P F-7	B23P D-7	P02	6
7	P29	P14	C03P P-7	B29P M-5	C49P A-11	C42P P-5	C32P M-2	C18P B-12	C05P B-4	C25P B-5	C53P R-11	B26P D-5	C55P B-7	P03	P42	7
8	P41	B64P M-12	B43P N-8	C15P C-3	B38P L-8	C20P R-9	C02P D-2	A09R K-14	C23P M-14	C40P A-7	B39P E-8	C59P N-13	B37P C-8	B57P D-4	P31	8
9	P47	P11	C61P P-9	B28P M-11	C45P A-5	C08P P-11	C19P P-12	C47P P-4	C57P D-14	C64P B-11	C06P R-5	B27P D-11	C11P B-9	P45	P12	9
10	P24	B05P M-9	B31P K-9	B52P N-10	C09P R-10	A02R P-10	C21P L-14	C37P G-15	C62P E-14	A19R F-14	C39P A-10	B56P C-10	B10P F-9	B49P D-9	P09	10
11	P10	P23	B41P L-10	C35P P-13	B14P J-8	C14P K-15	C26P E-1	B47P H-11	C27P L-1	C58P F-15	B46P H-9	C46P B-13	B40P E-10	P21	P53	11
12		P16	B08P N-12	C22P R-8	C16P N-14	B63P K-13	B17P L-12	C51P N-3	B16P E-12	B58P F-13	C48P C-14	C10P H-15	B07P C-12	P04		12
13		P44	C24P A-9	B24P M-13	B01P K-11	B11P J-10	C31P J-14	B32P H-13	C30P G-14	B30P G-10	B04P F-11	B22P D-13	C07P G-1	P05		13
14			P30	P25	P20	B35P J-12	P32	B25P D-12	P19	B44P G-12	P33	P27	P46			14
15					P54	P60	P07	P59	P36	P34	P22					15
	R	P	N	M	L	K	J	H	G	F	E	D	C	B	A	

A = Region 1
B = Region 2
C = Region 3
P = Region 4

xxx	Fuel Assembly Serial Number
yyy	Location in Cycle 1

DIAGRAM 2.2-3(2) Locations of Fuel Assemblies by Serial Number-Cycle 2

	R	P	N	M	L	K	J	H	G	F	E	D	C	B	A	
1																1
2				F/L		F/L		F/L		F/L		F/L				2
3					F/L		F/L		F/L		F/L					3
4		F/L		F/L		P/L		F/L		P/L		F/L		F/L		4
5			F/L										F/L			5
6		F/L		P/L		F/L		F/L		F/L		P/L		F/L		6
7			F/L										F/L			7
8		F/L		F/L		F/L		F/L		F/L		F/L		F/L		8
9			F/L										F/L			9
10		F/L		P/L		F/L		F/L		F/L		P/L		F/L		10
11			F/L										F/L			11
12		F/L		F/L		P/L		F/L		P/L		F/L		F/L		12
13					F/L		F/L		F/L		F/L					13
14				F/L		F/L		F/L		F/L		F/L				14
15																15
	R	P	N	M	L	K	J	H	G	F	E	D	C	B	A	

Symbol	RCCA Type	No. of inserts
F/L	Full Length	53
P/L	Part Length	8

DIAGRAM 2.2-4 Locations of Rod Cluster Control Assembly Inserts by Type

	R	P	N	M	L	K	J	H	G	F	E	D	C	B	A	
1																1
2				SA		B		C		B		SA				2
3					SD		SB		SB		SC					3
4		SA		D		P/L		D		P/L		D		SA		4
5			SC										SD			5
6		B		P/L		C		A		C		P/L		B		6
7			SB										SB			7
8		C		D		A		D		A		D		C		8
9			SB										SB			9
10		B		P/L		C		A		C		P/L		B		10
11			SD										SC			11
12		SA		D		P/L		D		P/L		D		SA		12
13					SC		SB		SB		SD					13
14				SA		B		C		B		SA				14
15																15
	R	P	N	M	L	K	J	H	G	F	E	D	C	B	A	

SHUTDOWN BANKS

Symbol	Designation	No. of RCCA's
SA	Shutdown A	8
SB	Shutdown B	8
SC	Shutdown C	4
SD	Shutdown D	4

CONTROL BANKS

Symbol	Designation	No. of RCCA's
A	Control A	4
B	Control B	8
C	Control C	8
D	Control D	9
P/L	Part Lengths	8

DIAGRAM 2.2-5 Locations of Rod Cluster Control Assemblies by Bank Designation

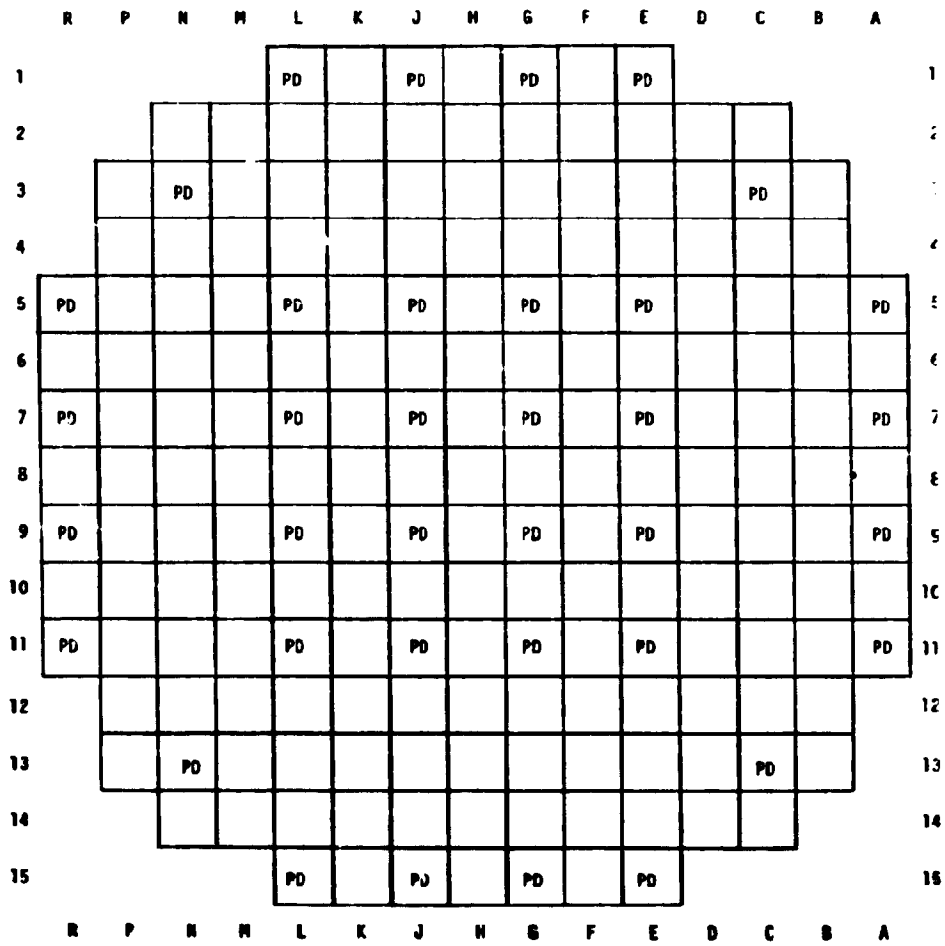

PD = Thimble Plugging Assembly Insert (36 total)

DIAGRAM 2.2-6(1) Locations of Thimble Plugging Assembly Inserts - Cycle 1

	R	P	N	M	L	K	J	H	G	F	E	D	C	B	A	
1					PD	PD	PD	PD	PD	PD	PD					1
2			PD		PD						PD		PD			2
3		PD	PD	PD		PD				PD			PD	PD		3
4					PD		PD		PD		PD					4
5	PD	PD		PD	PD	PD	PD	PD	PD	PD	PD	PD		PD	PD	5
6	PD		PD		PD						PD		PD		PD	6
7	PD			PD	PD		PD	PD	PD		PD	PD			PD	7
8	PD				PD		PD		PD		PD				PD	8
9	PD			PD	PD		PD	PD	PD		PD	PD			PD	9
10	PD		PD		PD						PD		PD		PD	10
11	PD	PD		PD	PD	PD	PD	PD	PD	PD	PD	PD		PD	PD	11
12					PD		PD		PD		PD					12
13		PD	PD			PD				PD			PD	PD		13
14			PD		PD						PD		PD			14
15					PD	PD	PD	PD	PD	PD	PD					15
	R	P	N	M	L	K	J	H	G	F	E	D	C	B	A	

PD = Thimble Plugging Assembly Insert (104 total)

DIAGRAM 2.2-6(2) Locations of Thimble Plugging Assembly Inserts - Cycle 2

	R	P	N	M	L	K	J	H	G	F	E	D	C	B	A	
1						10		9P		9P						1
2			8P		12P		20P		20S		12P		8P			2
3		8P		20P		12P		SPS		12P		20P		8P		3
4			20P		20P		16P		16P		20P		20P			4
5		12P		20P		16P		16P		16P		20P		12P		5
6	9P		12P		16P		20P		20P		16P		12P		9P	6
7		20P		16P		20P		16P		20P		16P		20P		7
8	9P		12P		16P		16P		16P		16P		12P		9P	8
9		20P		16P		20P		16P		20P		16P		20P		9
10	9P		12P		16P		20P		20P		16P		12P		9P	10
11		12P		20P		16P		16P		16P		20P		12P		11
12			20P		20P		16P		16P		20P		20P			12
13		8P		20P		12P		SPS		12P		20P		8P		13
14			8P		12P		20P		20S		12P		8P			14
15						9P		9P		9P						15
	R	P	N	M	L	K	J	H	G	F	E	D	C	B	A	

STANDARD ASSEMBLIES

Symbol	# B/P Rods per Insert	# Inserts
20P	20	30
16P	16	24
12P	12	18
9P	9	12
8P	8	8

SPECIAL SOURCE BEARING ASSEMBLIES

Symbol	# B/P Rods per Insert	# Inserts
20S	19	2
SPS	12	2

DIAGRAM 2.2-7(1) Locations of Burnable Poison Assembly Inserts by Number of Burnable Poison Rods - Cycle 1

	R	P	N	M	L	K	J	H	G	F	E	D	C	B	A	
1																1
2							20		20							2
3								SPS			20					3
4			12										20			4
5																5
6							12		12							6
7		20				12				12				20		7
8			12										12			8
9		20				12				12				20		9
10							12		12							10
11																11
12			20										20			12
13				20				SPS				20				13
14							20		20							14
15																15
	R	P	N	M	L	K	J	H	G	F	E	D	C	B	A	

STANDARD ASSEMBLIES

Symbol	# B/P Rods per Insert	# Inserts
20	20	14
12	12	11

SPECIAL SOURCE BEARING ASSEMBLIES

Symbol	# B/P Rods per Insert	# Inserts
SPS	12	2

DIAGRAM 2.2-7(2) Locations of Burnable Poison Assembly Inserts by Number of Burnable Poison Rods - Cycle 2

	R	P	N	M	L	K	J	H	G	F	E	D	C	B	A	
1						B9P1		B9P3		B9P5						1
2			B8P3		12P06		20P03		20P31		12P08		A8P3			2
3		B8P1		20P25		12P07		SPS22		12P04		20P16		A8P2		
4			20P20		20P06		16P12		16P05		20P12		20P17			4
5		12P18		20P19		16P02		16P01		16P09		20P14		12P13		5
6	A9P3		12P16		16P11		20P27		20P23		16P07		12P11		A9P5	6
7		20P01		16P23		20P29		16P03		20P18		16P15		20P08		7
8	A9P2		12P10		16P24		16P19		16P04		16P16		12P05		A9P6	8
9		20P11		16P14		20P30		16P21		20P21		16P13		20P10		9
10	A9P4		12P01		16P18		20P24		20P09		16P06		12P14		A9P1	10
11		12P02		20P26		16P17		16P22		16P20		20P04		12P12		11
12			20P05		20P07		16P08		16P10		20P28		20P15			12
13		A8P4		20P13		12P15		SPS11		12P03		20P02		B8P4		13
14			A8P1		12P17		20P22		20P32		12P09		B8P2			14
15						B9P4		B9P2		B9P6						15
	R	P	N	M	L	K	J	H	G	F	E	D	C	B	A	

20P = 20 B/P Rods/assembly
16P = 16 B/P Rods/assembly
12P = 12 B/P Rods/assembly
A9P,B9P = 9 B/P Rods/assembly
A8P,B8P = 8 B/P Rods/assembly
SPS = 12 B/P Rods/assembly

Exceptions:

20P31 and 20P32 each contain 19 B/P Rods

DIAGRAM 2.2-8(1) Locations of Burnable Poison Assembly Inserts by Serial Number - Cycle 1

	R	P	N	M	L	K	J	H	G	F	E	D	C	B	A	
1																1
2							20P03 J-2		20P25 M-3							2
3								SPS22 H-3				20P16				3
4			12P16 N-6										20P17 C-4			4
5																5
6							12P06 L-2		12P08 E-2							6
7		20P01 P-7				12P18 P-5				12P13 B-5				20P28 E-12		7
8			12P10 N-8										12P05 C-8			8
9		20P11 P-9				12P02 P-11				12P12 B-11				20P10 B-9		9
10							12P17 L-14		12P09 E-14							10
11																11
12			20P05 N-12										20P15 C-12			12
13				20P13 M-13				SPS11 H-13				20P02 D-13				13
14							20P22 J-14		20P20 N-4							14
15																15
	R	P	N	M	L	K	J	H	G	F	E	D	C	B	A	

20P = 20 B/P Rods/assembly
12P = 12 B/P Rods/assembly
SPS = 12 B/P Rods/assembly

xxx	B/P Assembly Insert Serial Number
yyy	Location in Cycle 1

DIAGRAM 2.2-8(2) Locations of Burnable Poison Assembly Inserts by Serial Number - Cycle 2

Reproduced from
best available copy

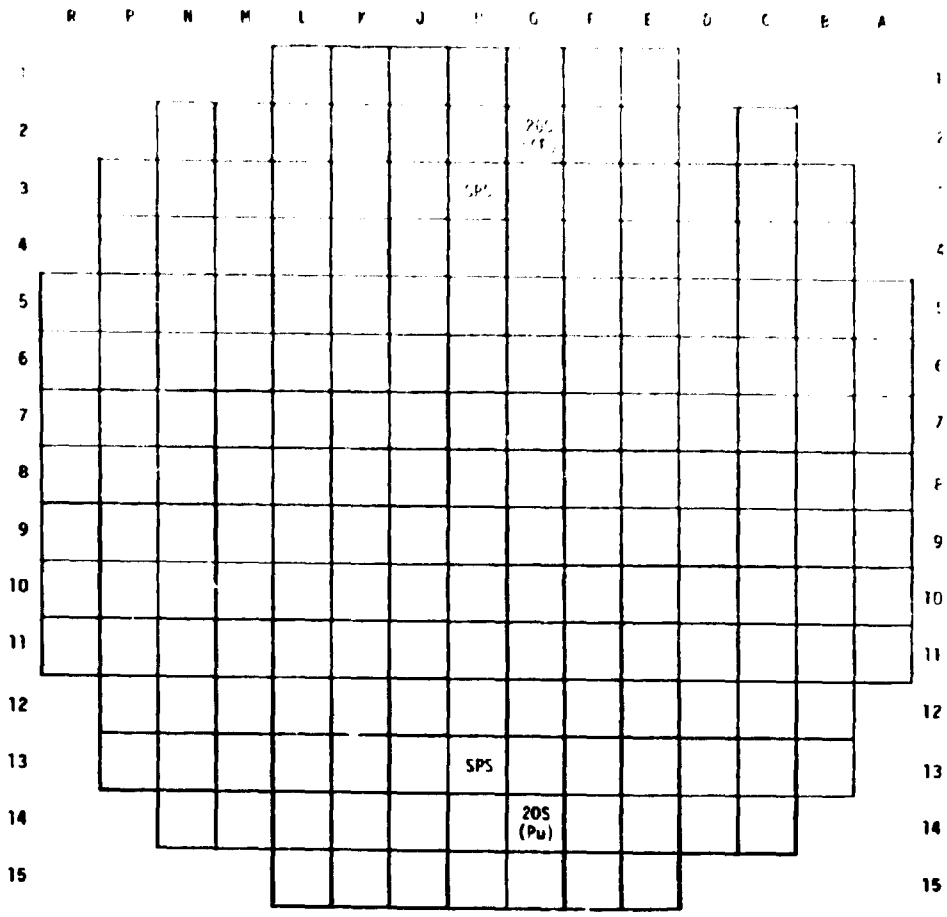

Symbol	Type of Source	Source Material	Number of Source Rods per Insert	Number of Source-Bearing Inserts
20S (Cf)	Primary	^{252}Cf	1	1
20S (Pu)	Primary	^{238}Pu-Be	1	1
SPS	Secondary	Sb-Be	4	2

DIAGRAM 2.2-9(1) Locations of Source Bearing Assembly Inserts by Type - Cycle 1

Reproduced from
best available copy

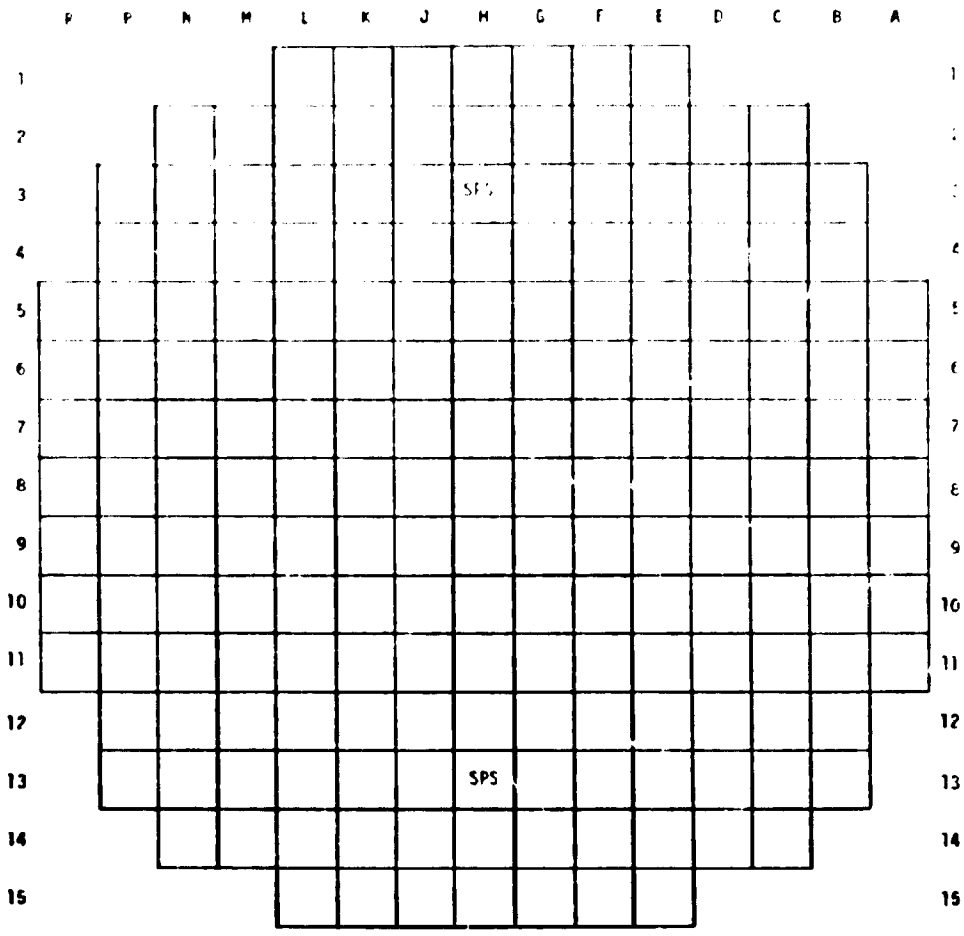

Symbol	Type of Source	Source Material	Number of Source Rods per Insert	Number of Source-Bearing Inserts
SPS	Secondary	Sb-Be	4	2

DIAGRAM 2.2-9(2) Locations of Source Bearing Assembly Inserts by Type - Cycle 2

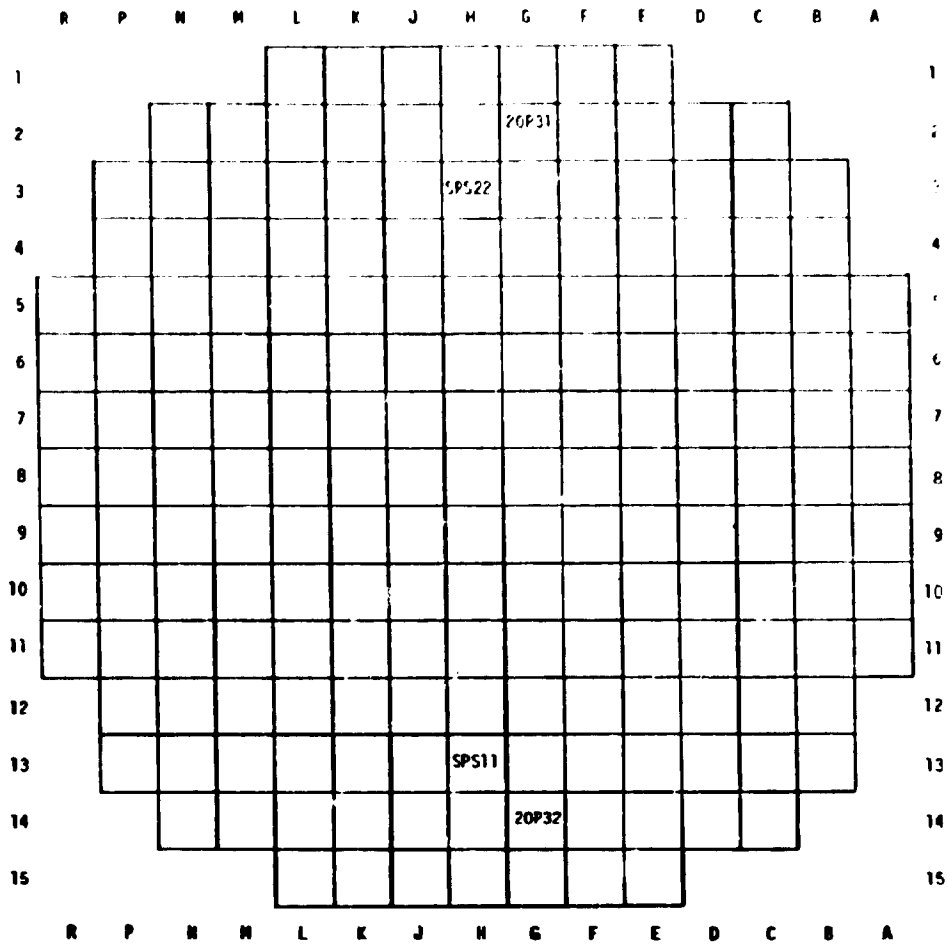

Serial Number	Source Material	Number of Source Rods per Insert
20P31	^{252}Cf	1
20P32	^{238}Pu-Be	1
SPS11 & SPS22	Sb-Be	4

DIAGRAM 2.2-10(1) Locations of Source Bearing Assembly Inserts by Serial Number - Cycle 1

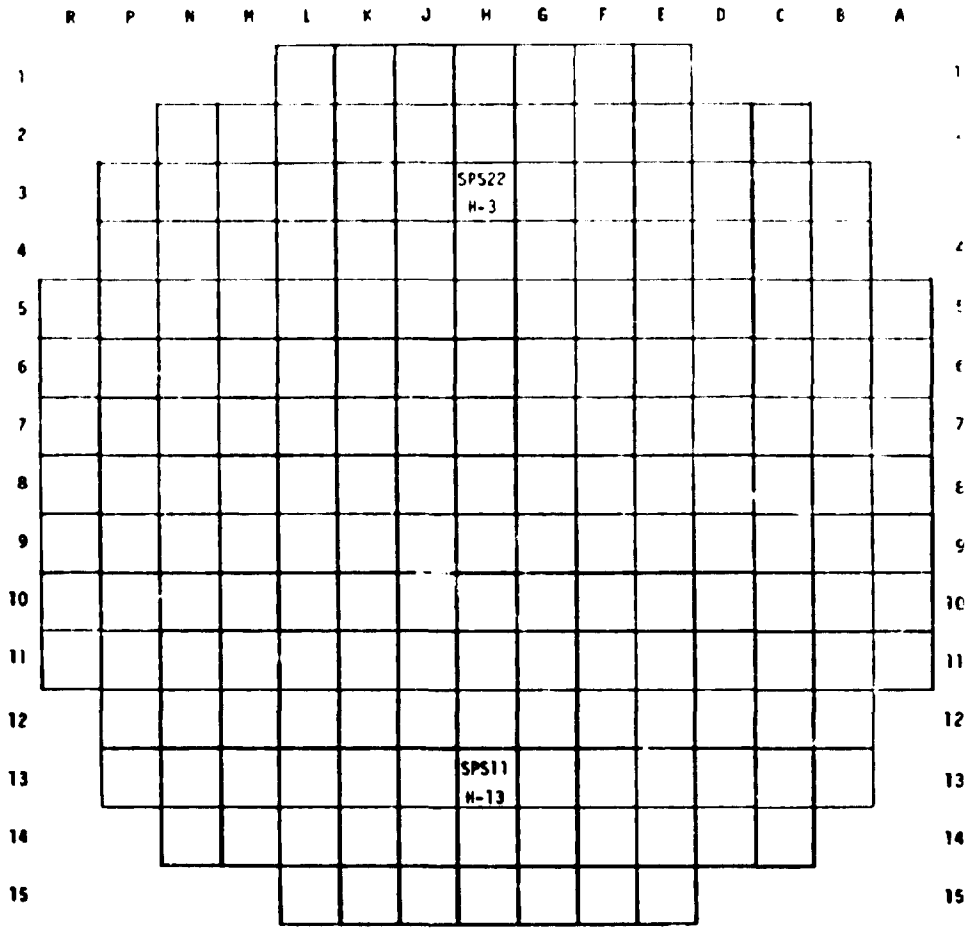

Serial Number	Source Material	Number of Source Rods per Insert
SPS11 & SPS22	Sb-Be	4

xxx	Serial Number of Insert
yyy	Location in Cycle 1

DIAGRAM 2.2-10(2) Locations of Source Bearing Assembly Inserts by Serial Number - Cycle 2

	R	P	N	M	L	K	J	H	G	F	E	D	C	B	A	
1							MD			MD						1
2			MD			MD		MD								2
3								MD		MD		MD		MD		3
4		MD	MD					MD								4
5					MD				MD		MD		MD			5
6	MD		MD			MD		MD						MD		6
7				MD			MD			MD			MD			7
8	MD		MD		MD		MD			MD		MD	MD	MD		8
9		MD							MD		MD				MD	9
10					MD		MD					MD				10
11	MD				MD			MD			MD				MD	11
12						MD			MD			MD				12
13			MD		MD			MD						MD		13
14			MD				MD			MD		MD				14
15					MD			MD								15
	R	P	N	M	L	K	J	H	G	F	E	D	C	B	A	

MD = Movable Detector Access Thimble

DIAGRAM 2.2-11 Locations of Movable Detector Thimbles

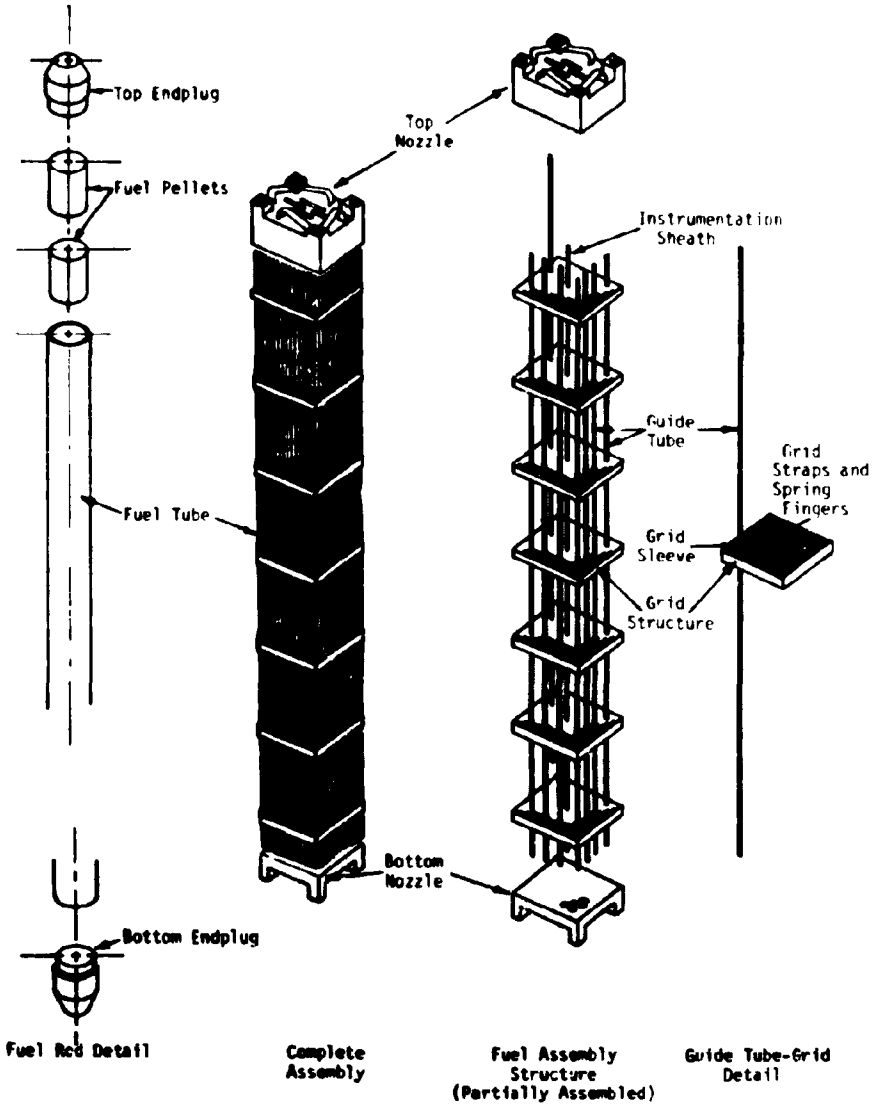

Diagram 2.2-12(1) Fuel Assembly General Configuration

Reproduced from
best available copy

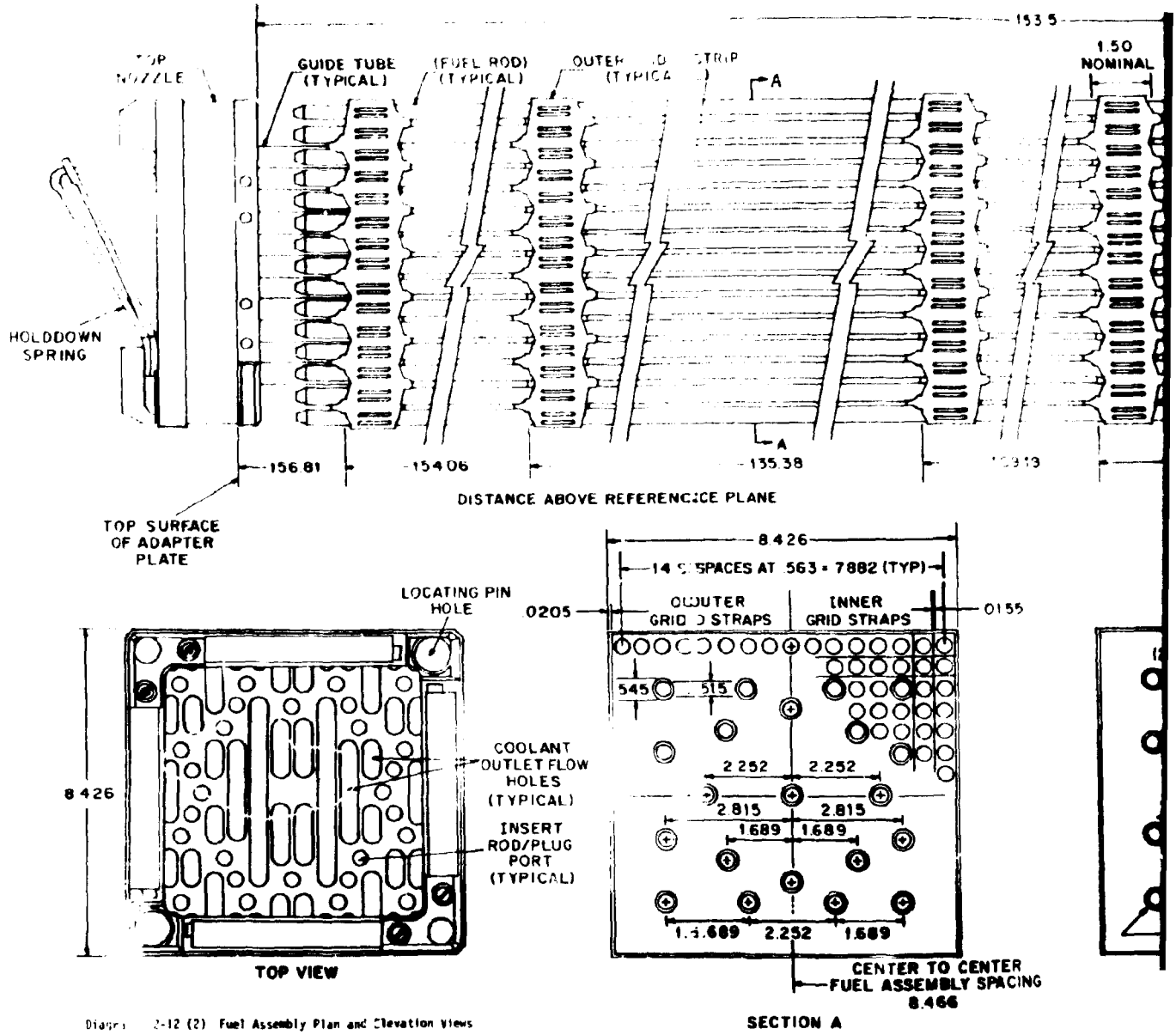

Diagram 2-12 (2) Fuel Assembly Plan and Elevation Views

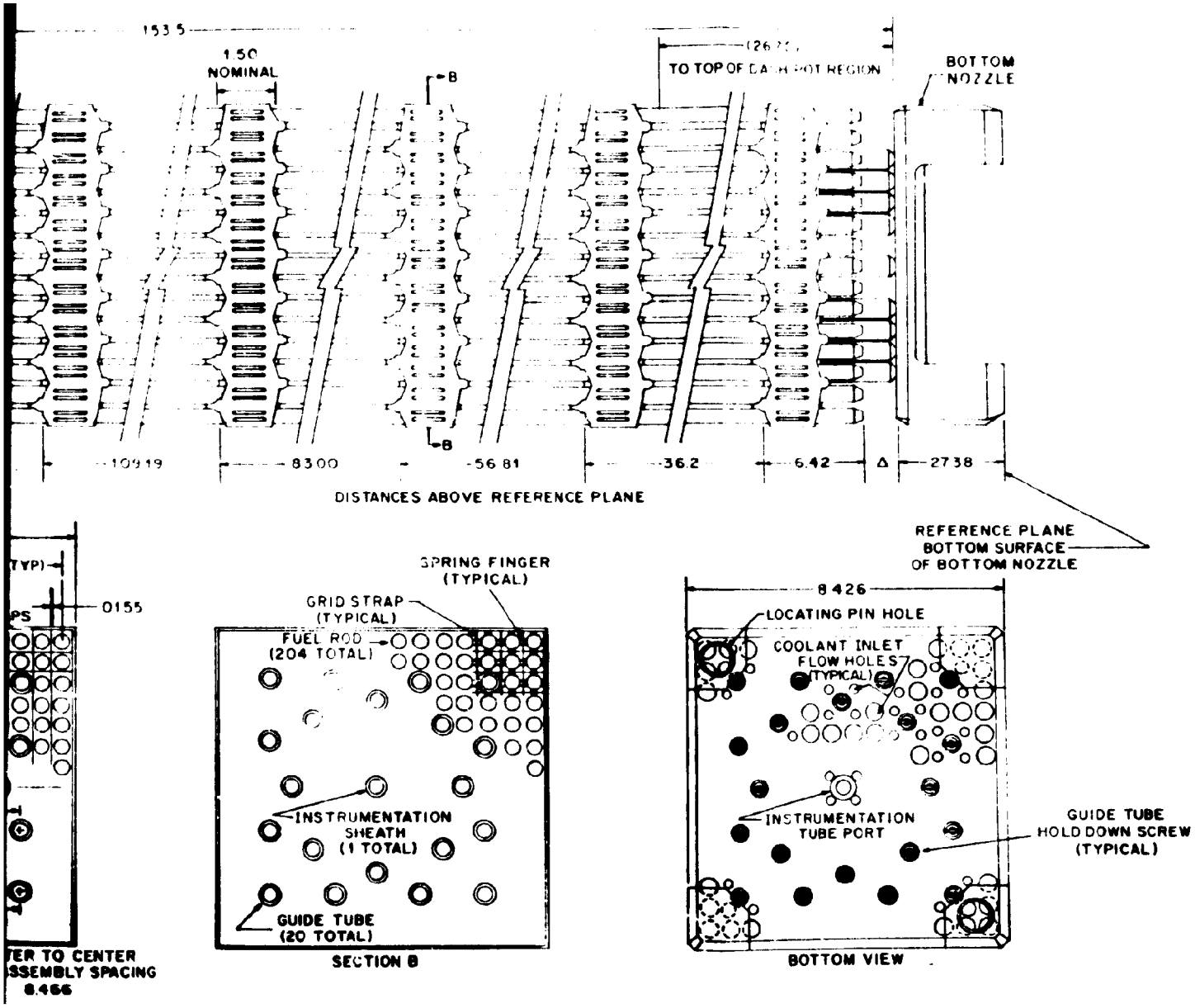
153.5
1.50
NOMINAL
B
B
TO TOP OF DASHPOT REGION
BOTTOM
NOZZLE
10.919
8.300
56.81
36.2
6.42
Δ
2.738
DISTANCES ABOVE REFERENCE PLANE
REFERENCE PLANE
BOTTOM SURFACE
OF BOTTOM NOZZLE
(TYP)
0155
PS
TER TO CENTER
SSEMBLY SPACING
8.466
SPRING FINGER
(TYPICAL)
GRID STRAP
(TYPICAL)
FUEL ROD
(204 TOTAL)
INSTRUMENTATION
SHEATH
(1 TOTAL)
GUIDE TUBE
(20 TOTAL)
SECTION B
8.426
LOCATING PIN HOLE
COOLANT INLET
FLOW HOLES
(TYPICAL)
INSTRUMENTATION
TUBE PORT
GUIDE TUBE
HOLD DOWN SCREW
(TYPICAL)
BOTTOM VIEW

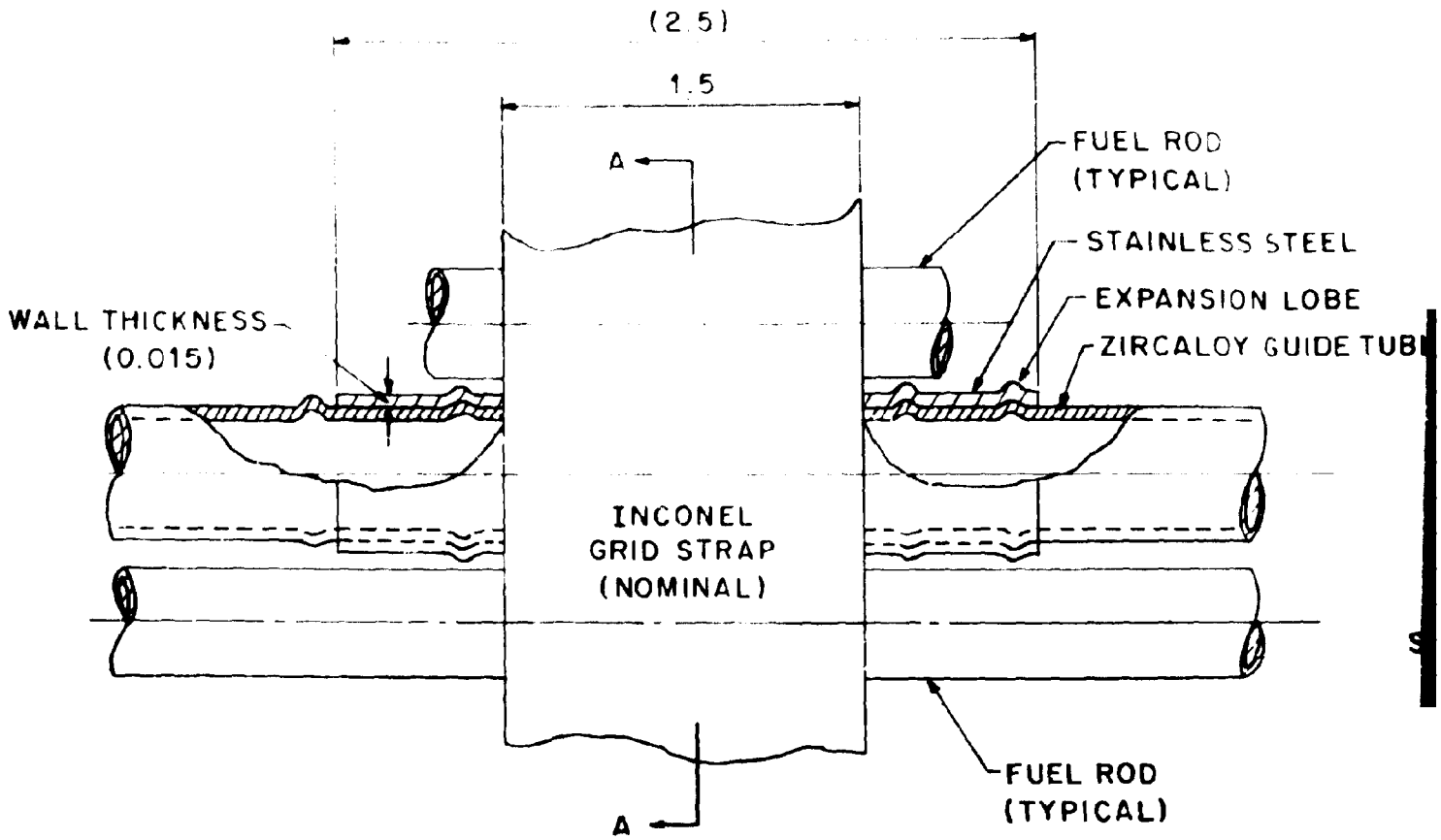

Diagram 2.2-13 Guide Tube - Grid Sleeve - Grid Strap Attachment Detail

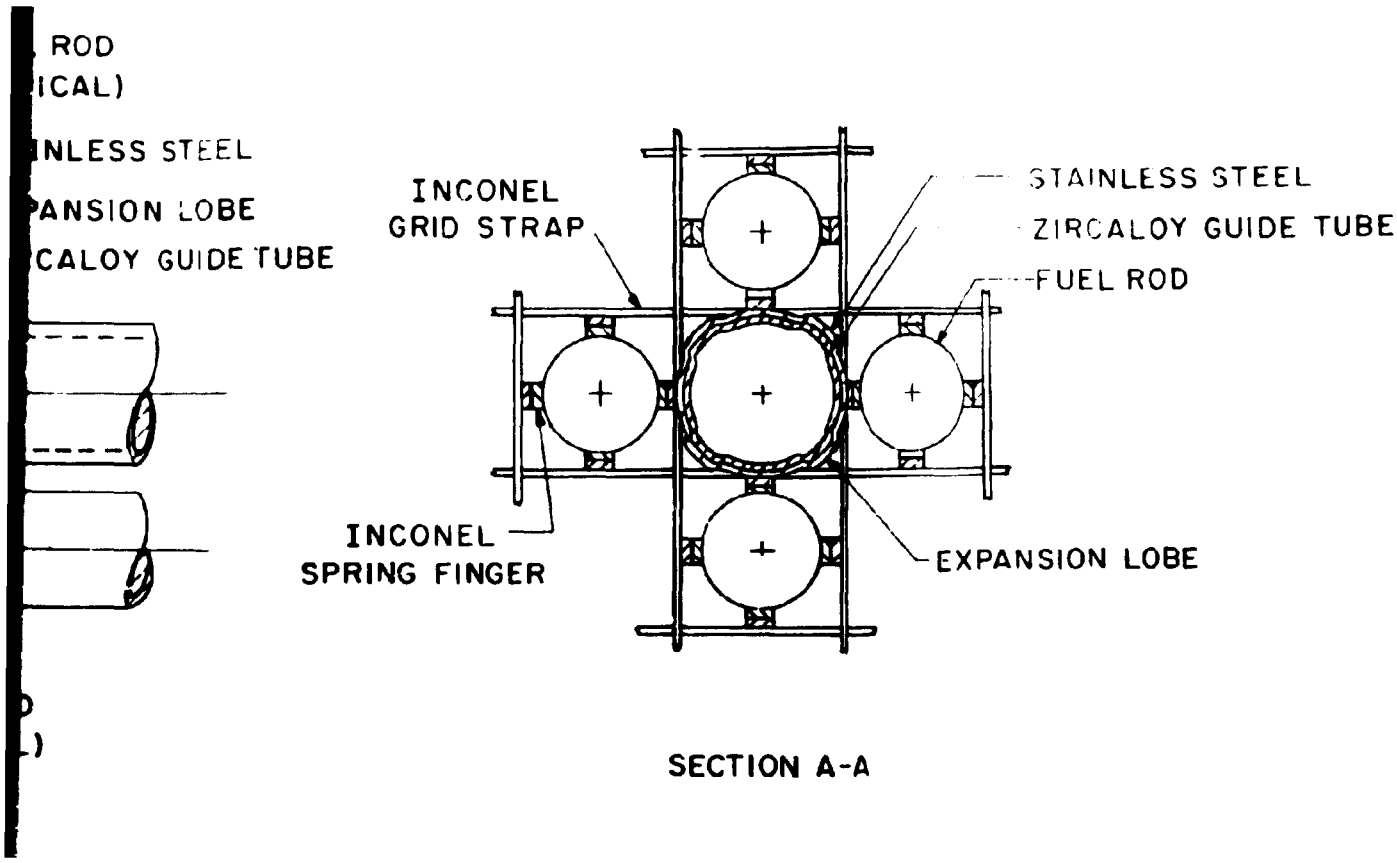
ROD
ICAL)
INLESS STEEL
ANSION LOBE
CALOY GUIDE TUBE
INCONEL
GRID STRAP
STAINLESS STEEL
ZIRCALOY GUIDE TUBE
FUEL ROD
INCONEL
SPRING FINGER
EXPANSION LOBE
SECTION A-A

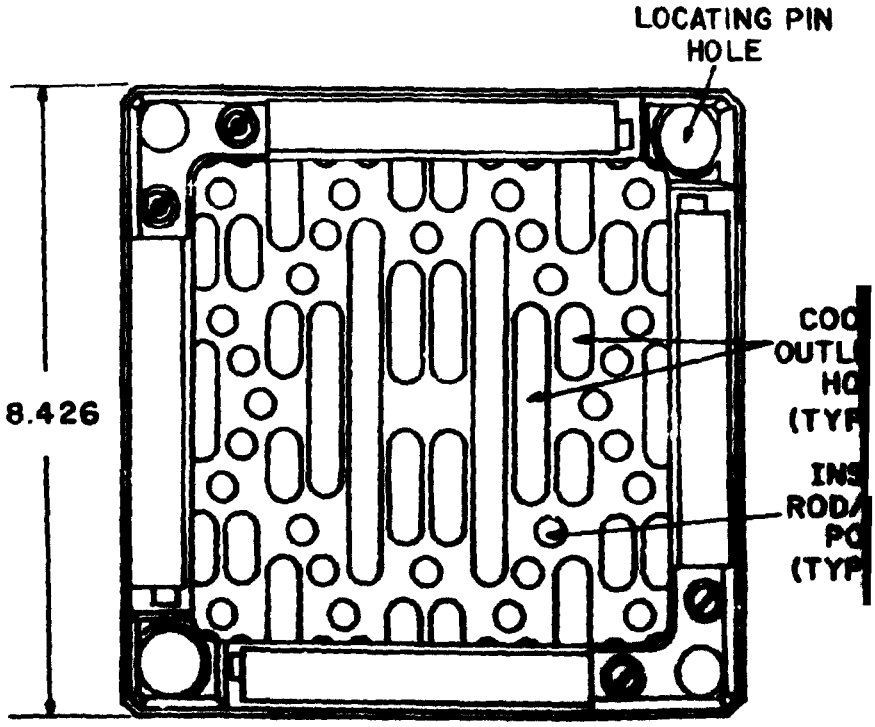

Diagram 2.2-14 Top Nozzle Detail

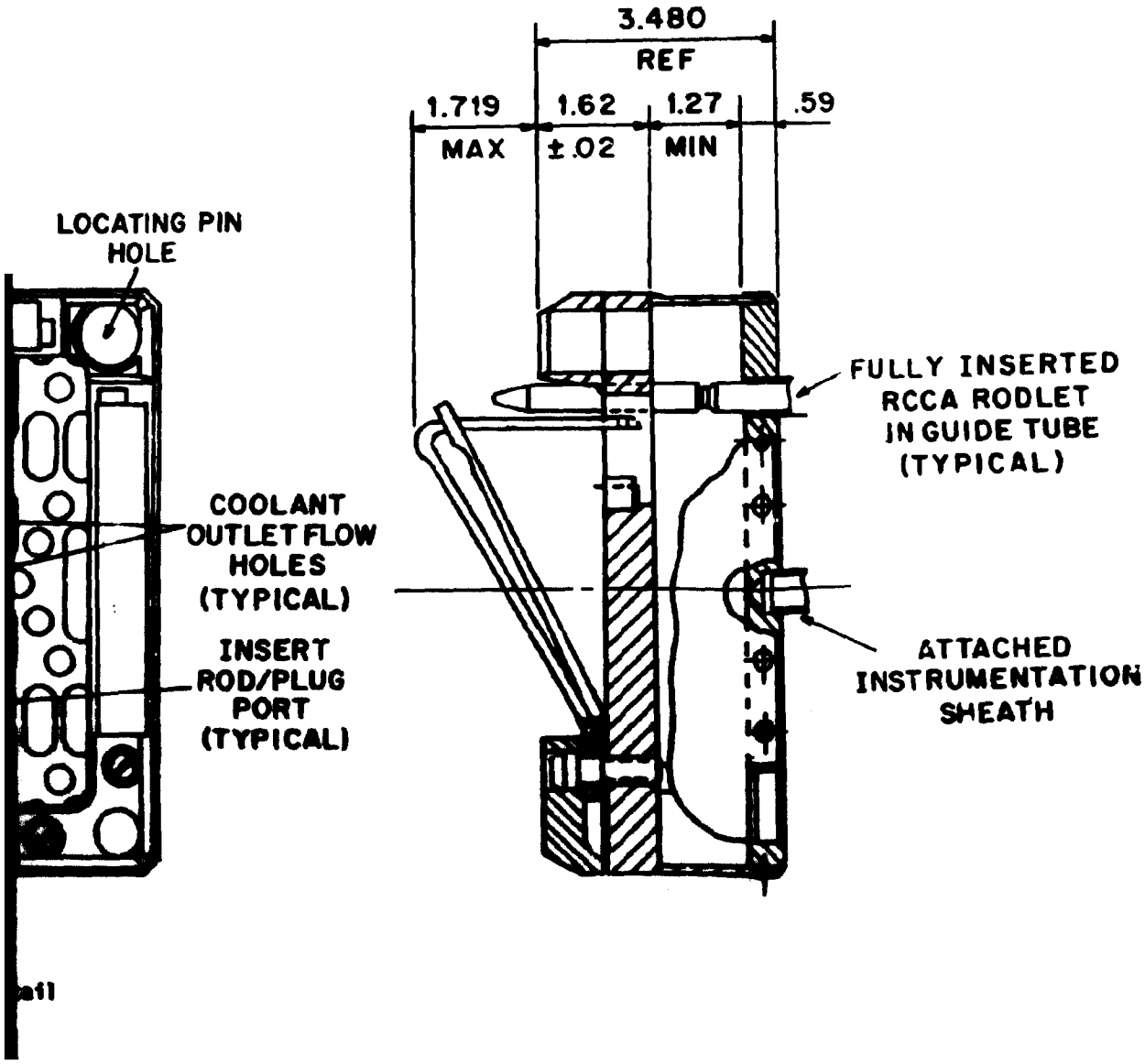
3.480
REF
1.719
MAX
1.62
±.02
1.27
MIN
.59
LOCATING PIN HOLE
FULLY INSERTED RCCA RODLET IN GUIDE TUBE (TYPICAL)
COOLANT OUTLET FLOW HOLES (TYPICAL)
INSERT ROD/PLUG PORT (TYPICAL)
ATTACHED INSTRUMENTATION SHEATH

a11

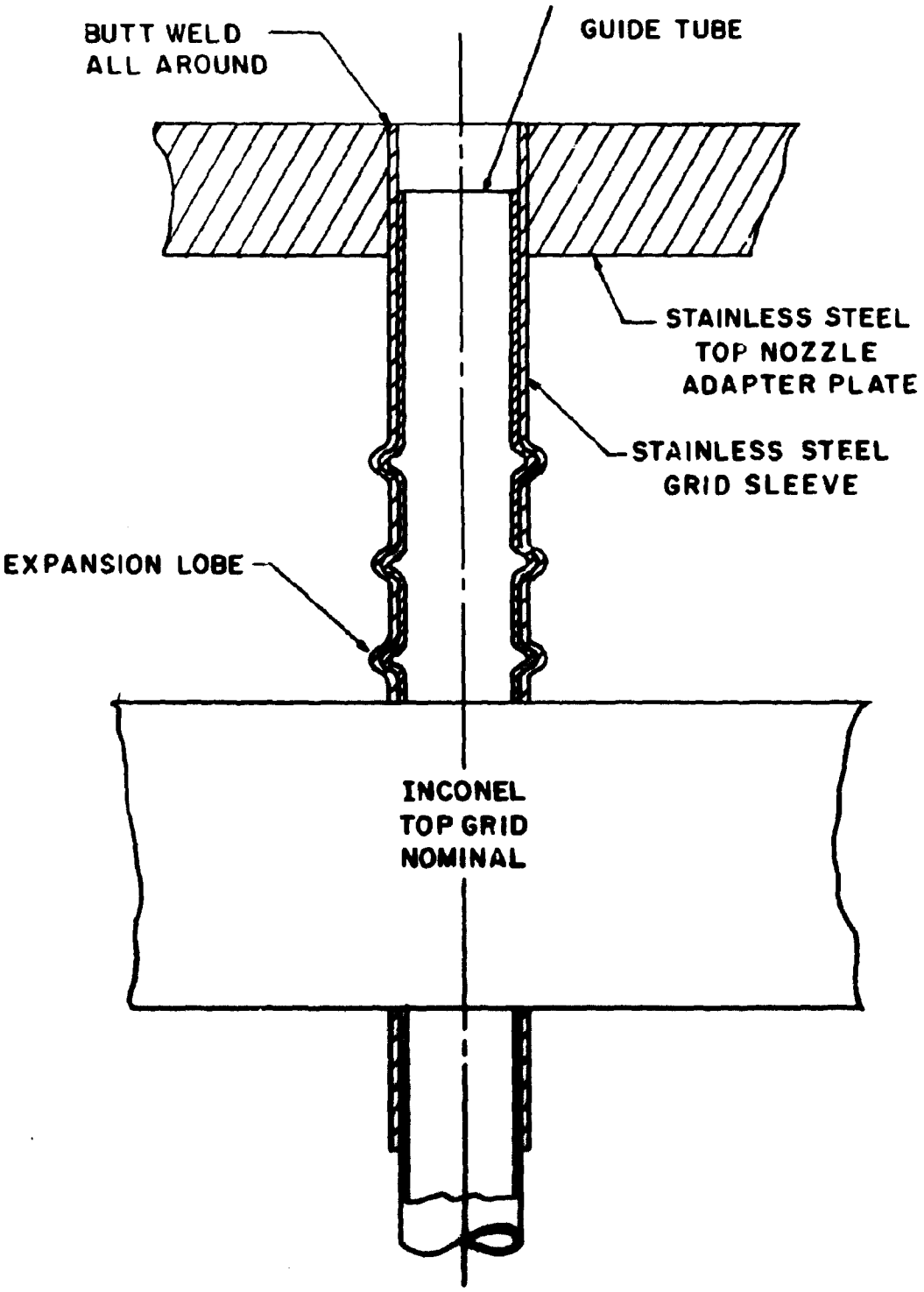

Diagram 2.2-15 Top Grid - Guide Tube - Adapter Plate Attachment Detail

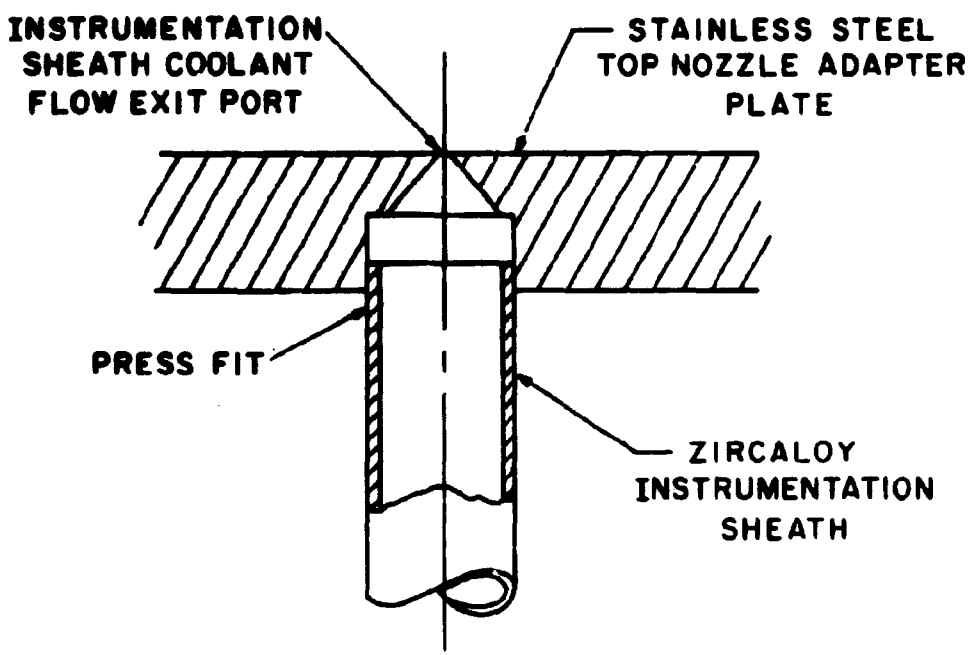

Diagram 2.2-16 Instrumentation Sheath - Adapter Plate Attachment Detail

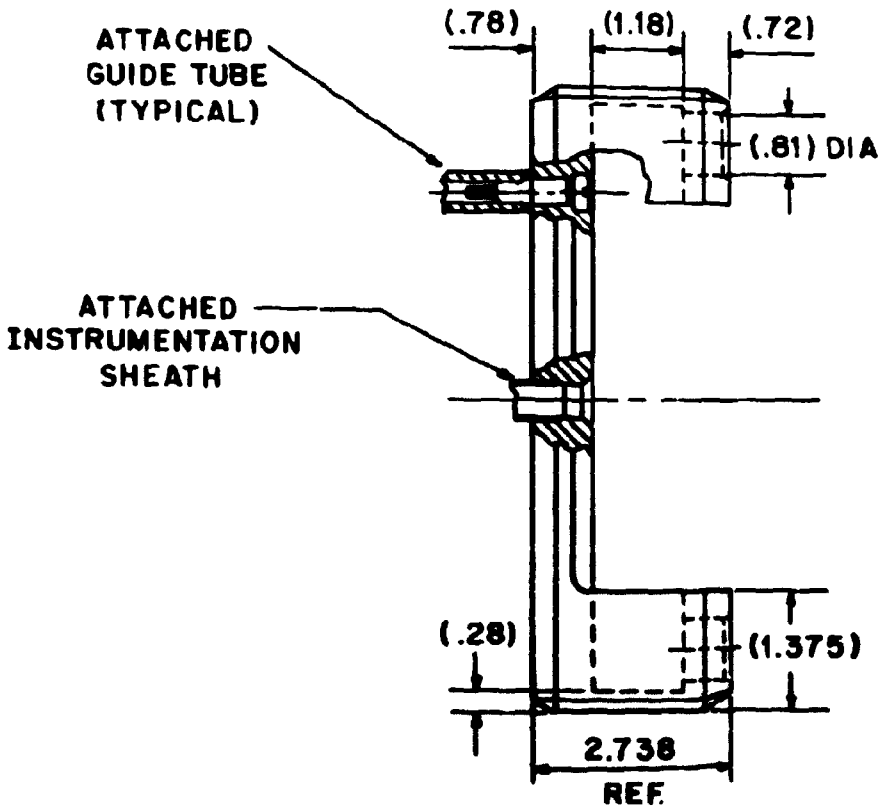

Diagram 2.2-17 Bottom Nozzle Detail

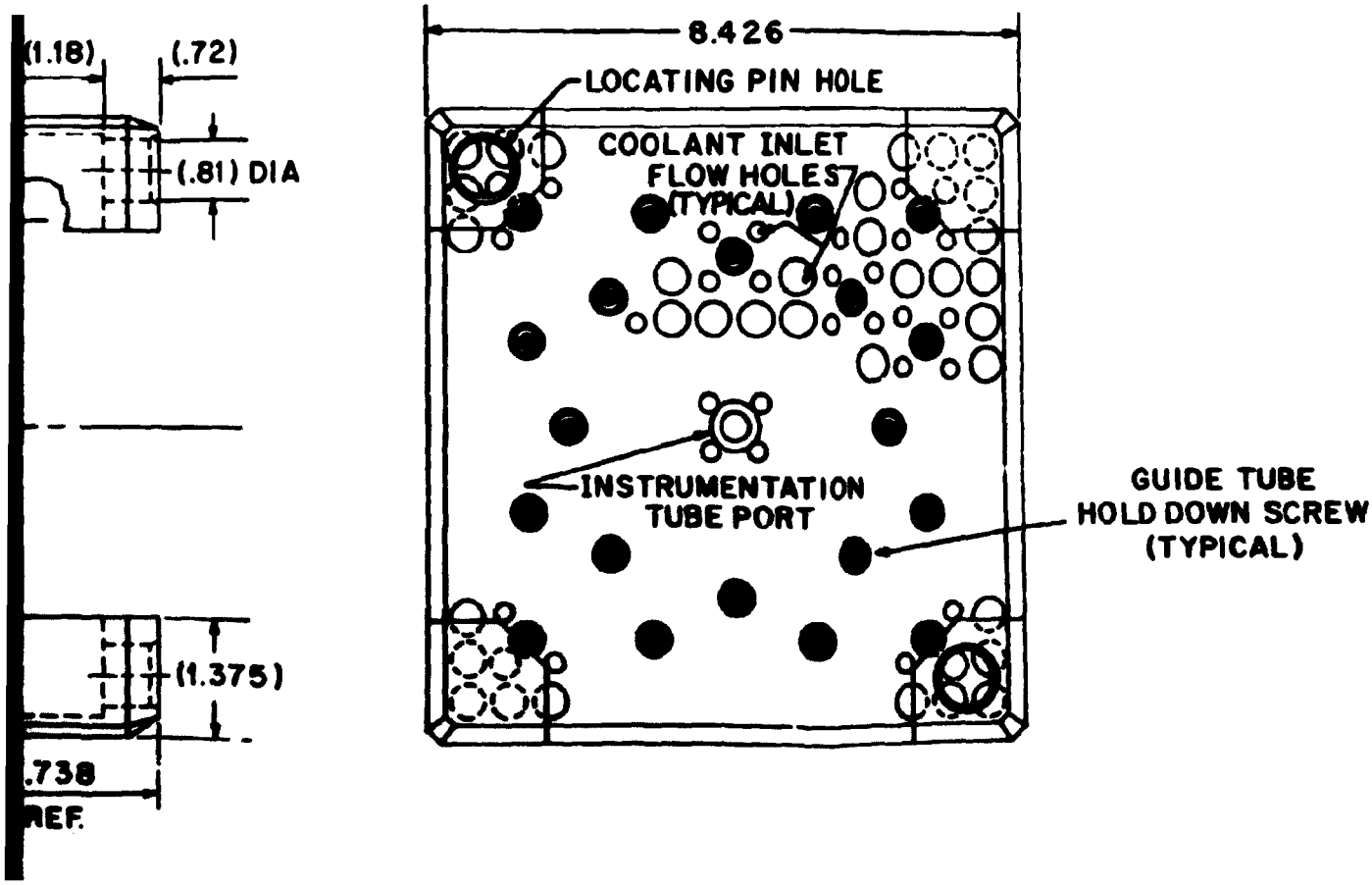
(1.18)
(.72)
(.81) DIA
(1.375)
.738
REF.
8.426
LOCATING PIN HOLE
COOLANT INLET
FLOW HOLES
(TYPICAL)
INSTRUMENTATION
TUBE PORT
GUIDE TUBE
HOLD DOWN SCREW
(TYPICAL)

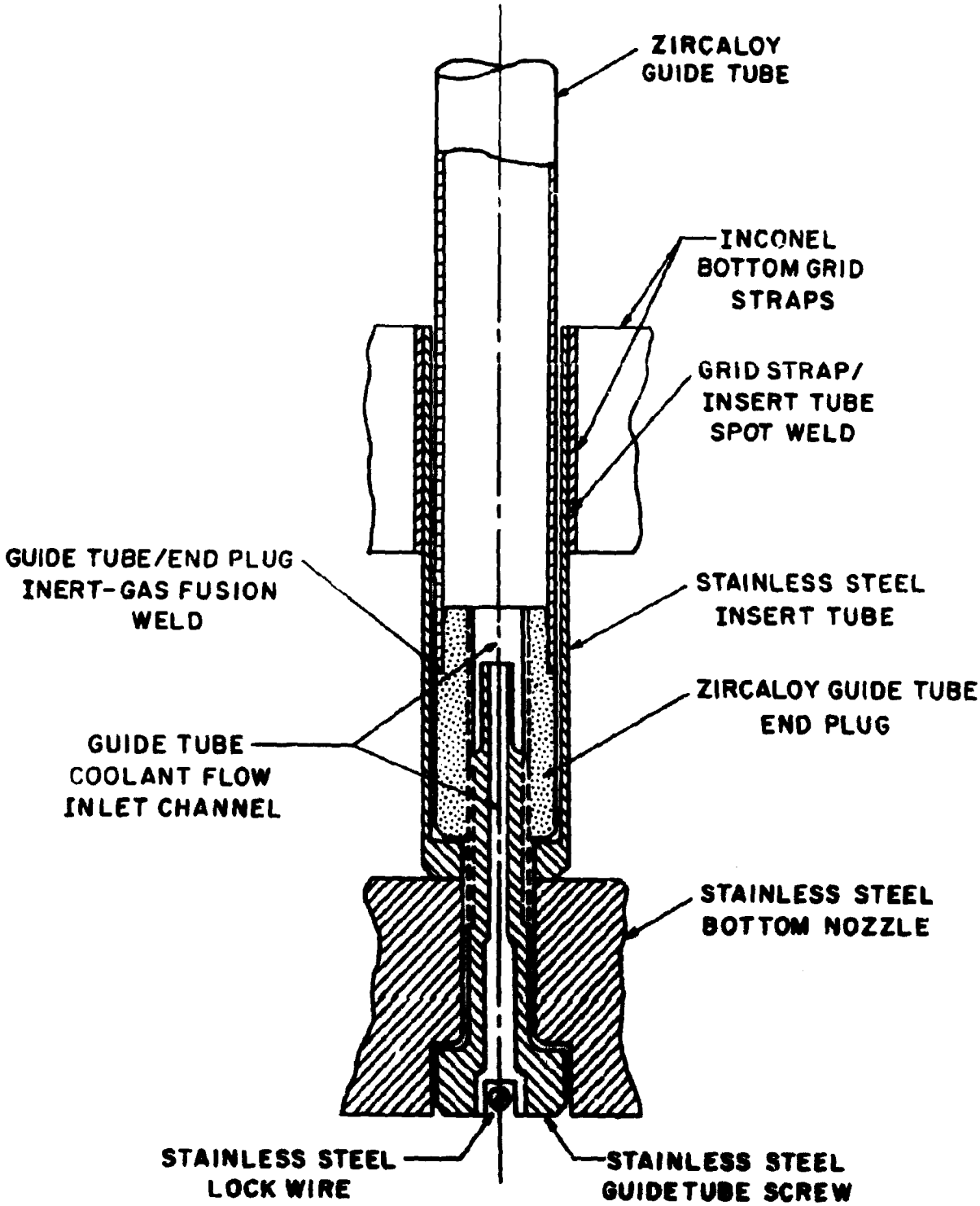

Diagram 2.2-18 Bottom Grid - Guide Tube - Bottom Nozzle Attachment Detail

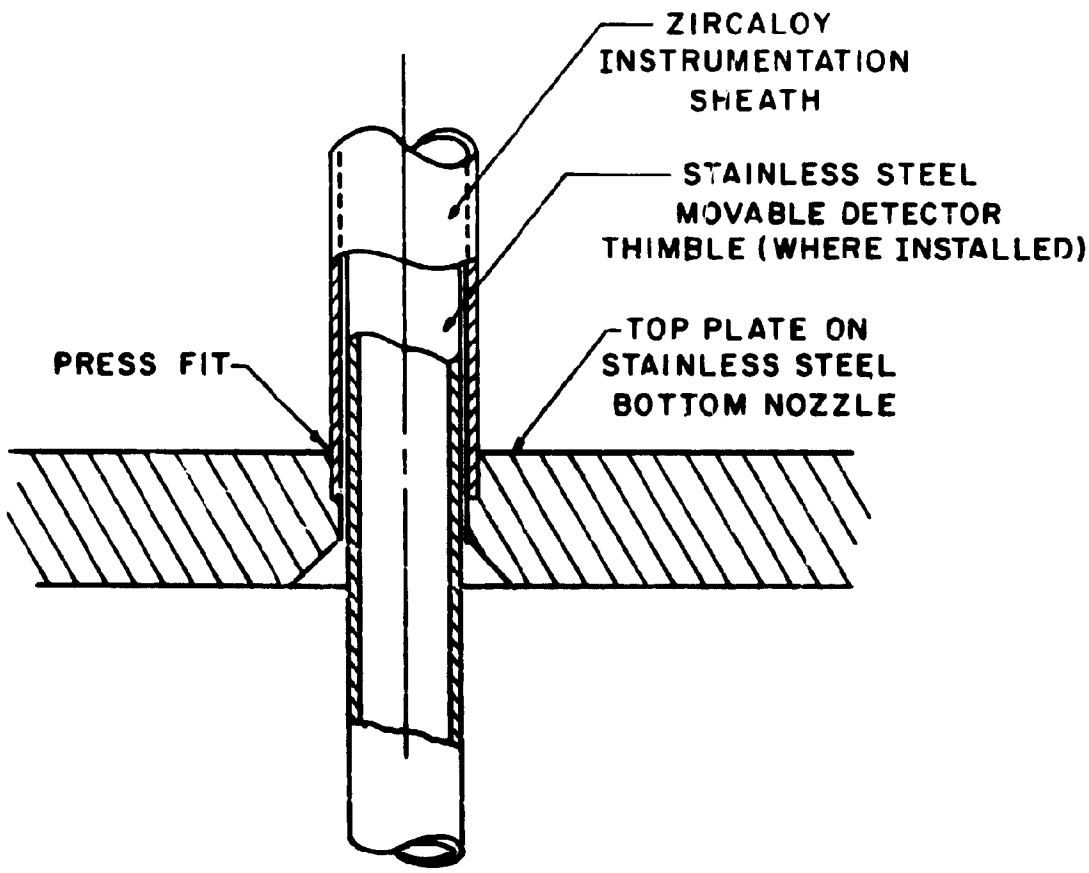

Diagram 2.2-19 Instrumentation Sheath - Bottom Nozzle Attachment Detail

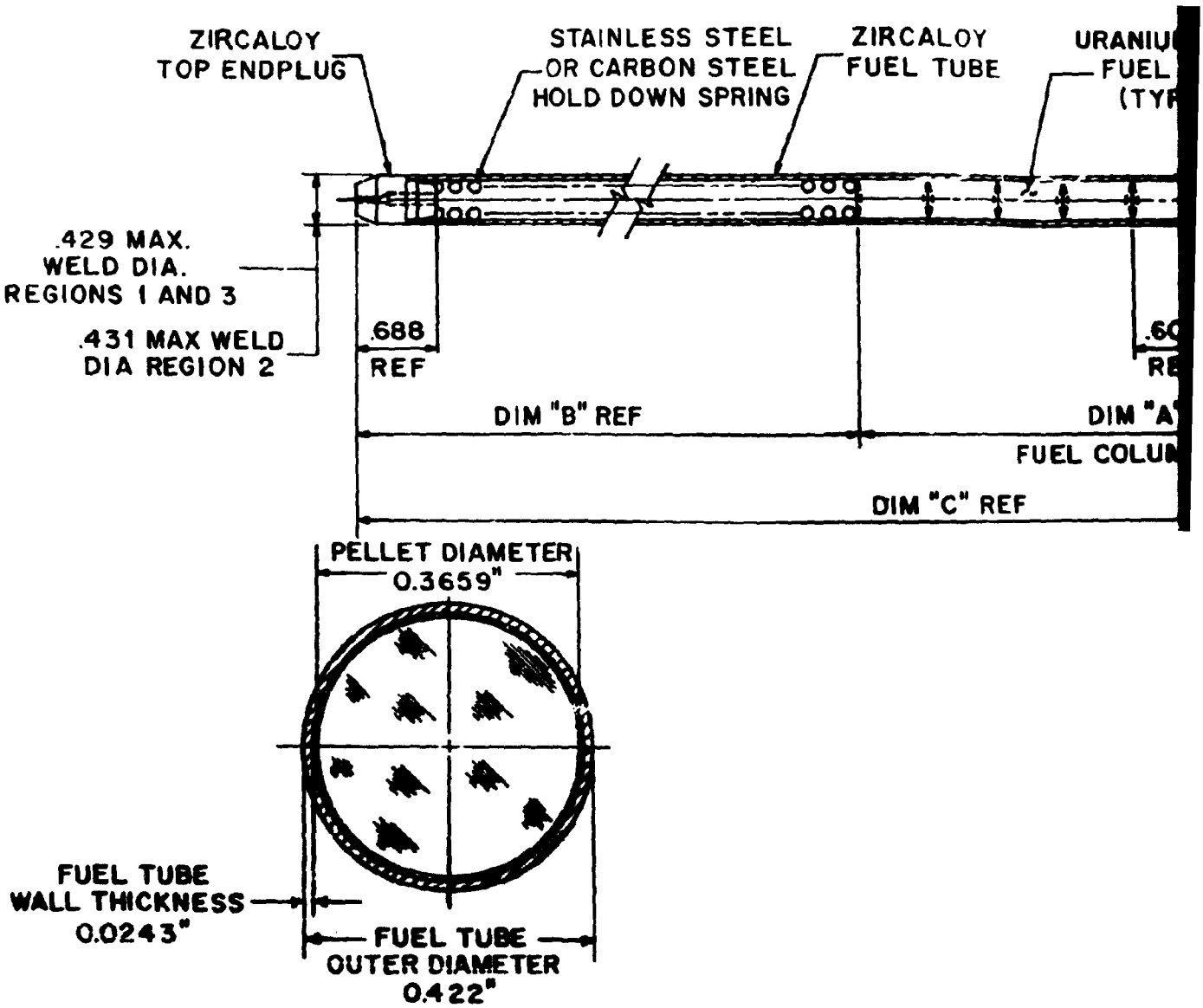

Diagram 2.2-20 Fuel Rod Configuration

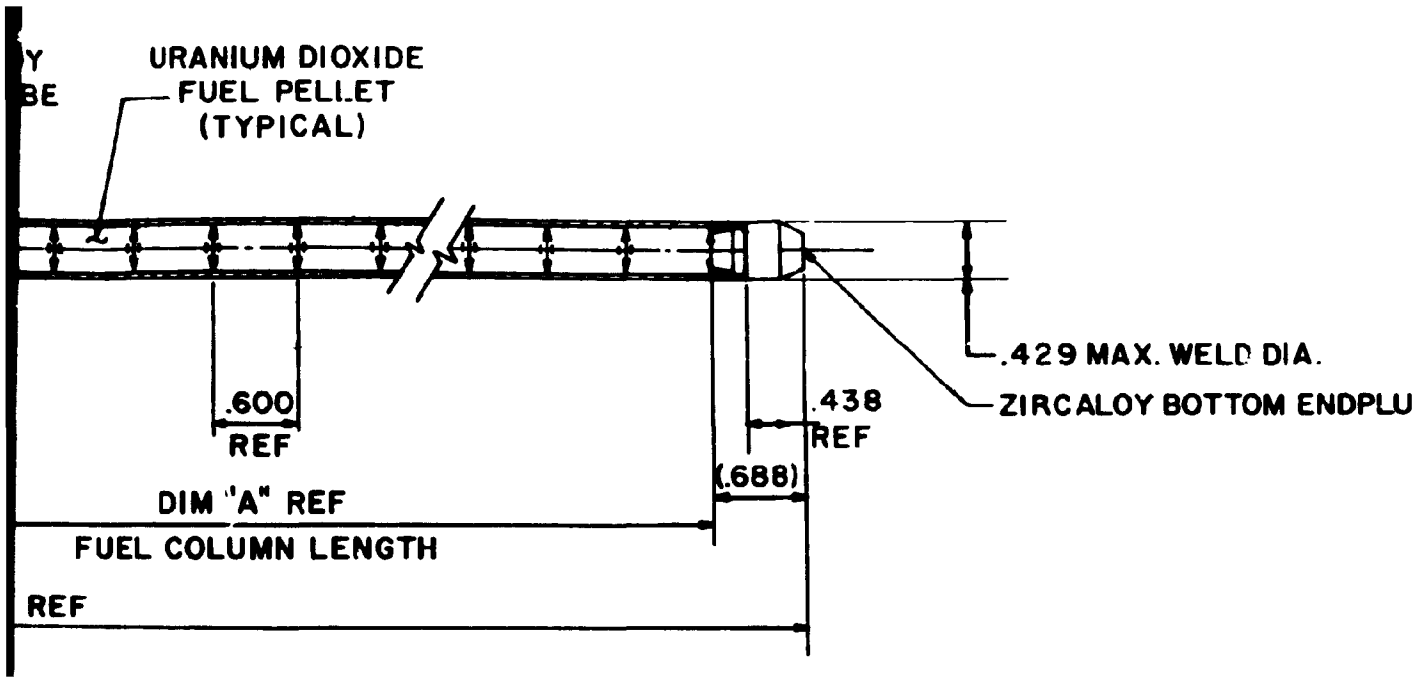

REGION	DIM A	DIM B	DIM C
1	144.00	7.142	151.830
2	143.40	8.268	152.361
3	142.80	8.342	151.835

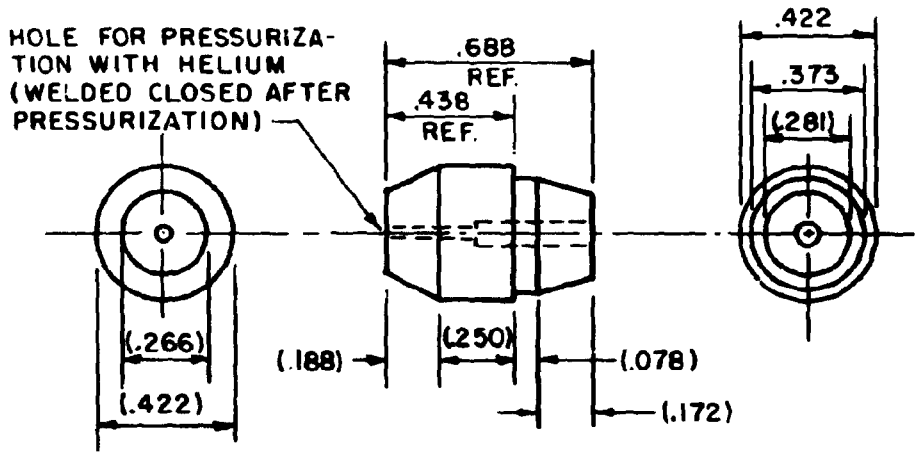

Diagram 2.2-21 Fuel Rod Top Endplug Detail

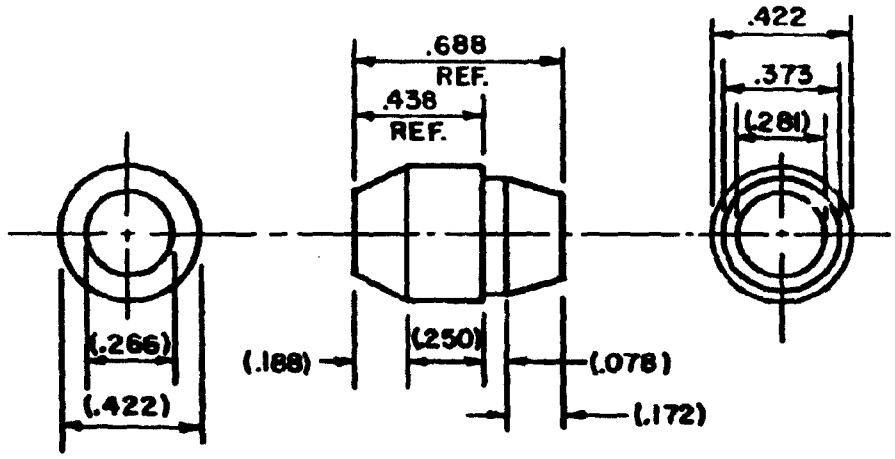

Diagram 2.2-22 Fuel Rod Bottom Endplug Detail

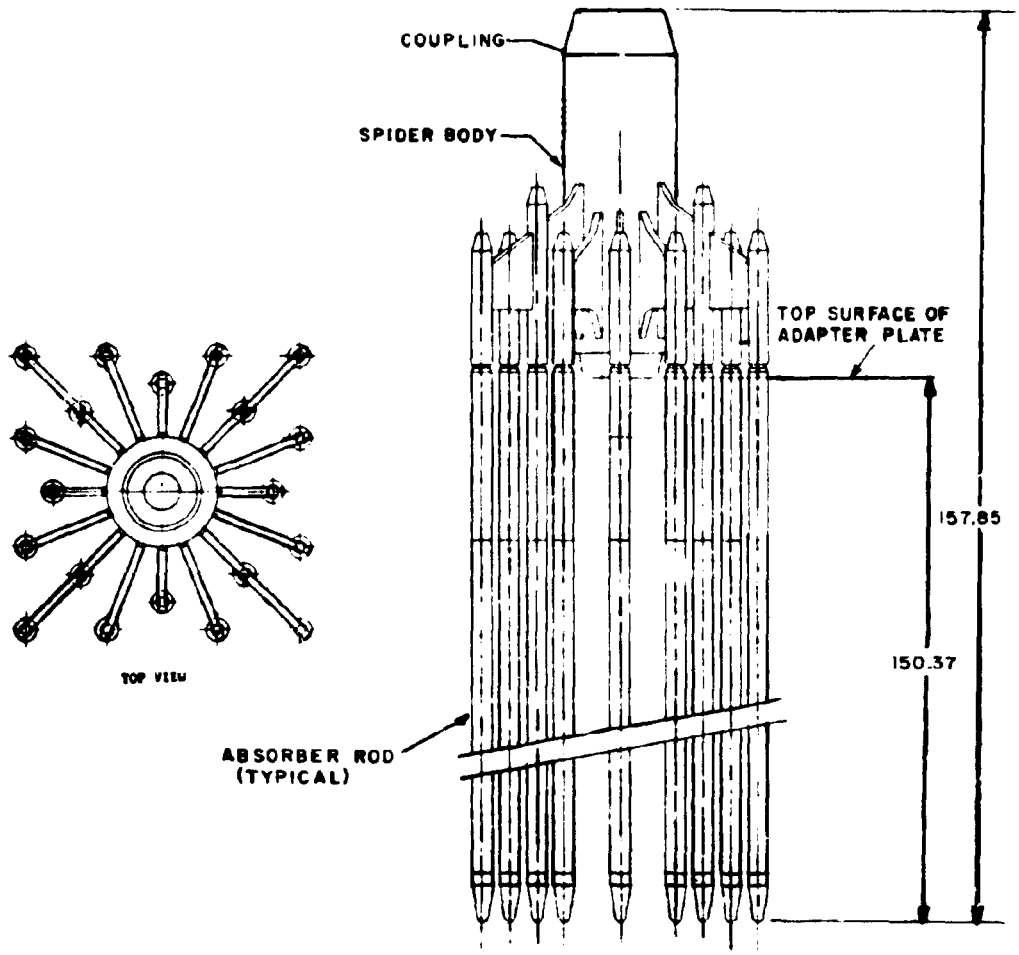

Diagram 2.2-23 Rod Cluster Control Assembly Insert Configuration

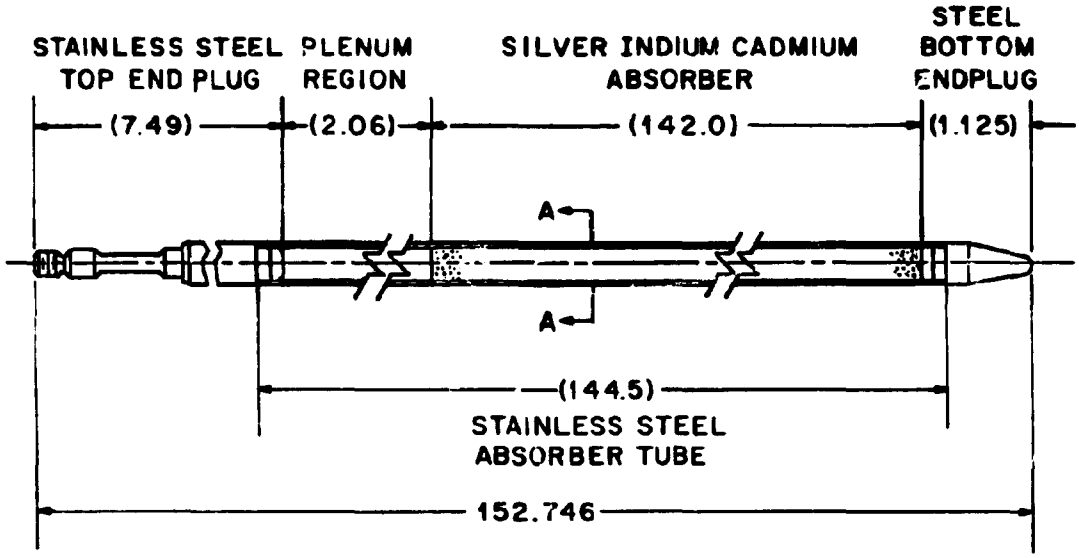

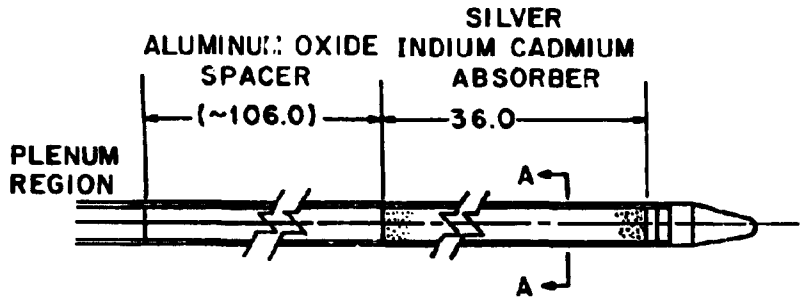

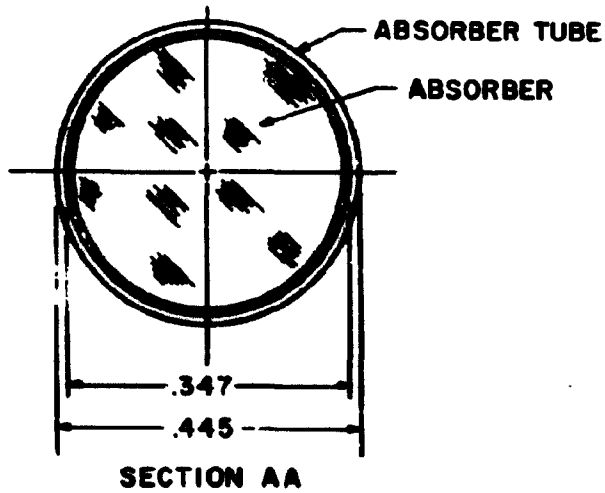

Diagram 2.2-24 (1) Full Length RCCA Absorber Rod Configuration

Diagram 2.2-24 (2) Part Length RCCA Absorber Rod Configuration

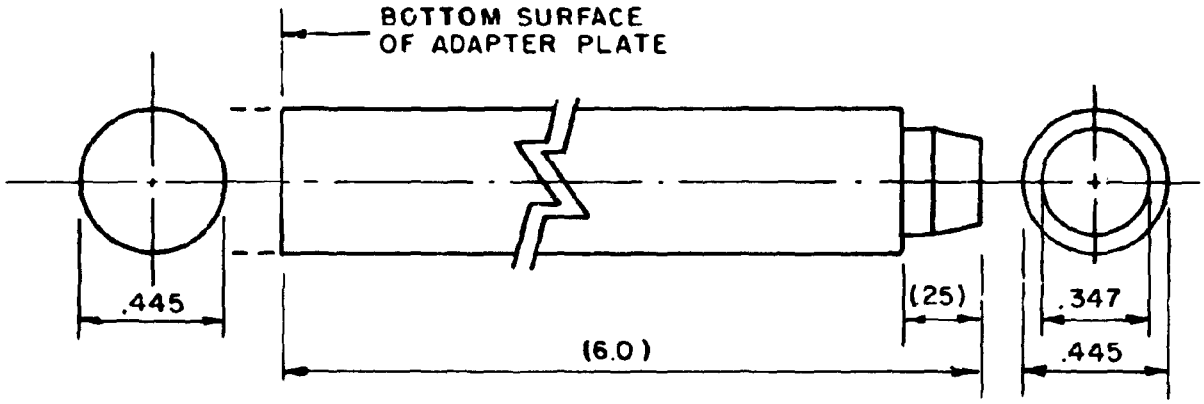

Diagram 2.2-25 RCCA Rod Top Endplug Detail

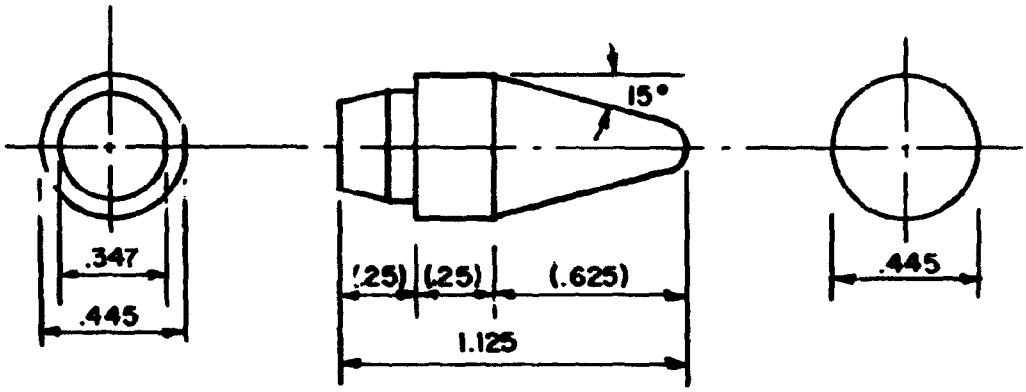

Diagram 2.2-26 RCCA Rod Bottom Endplug Detail

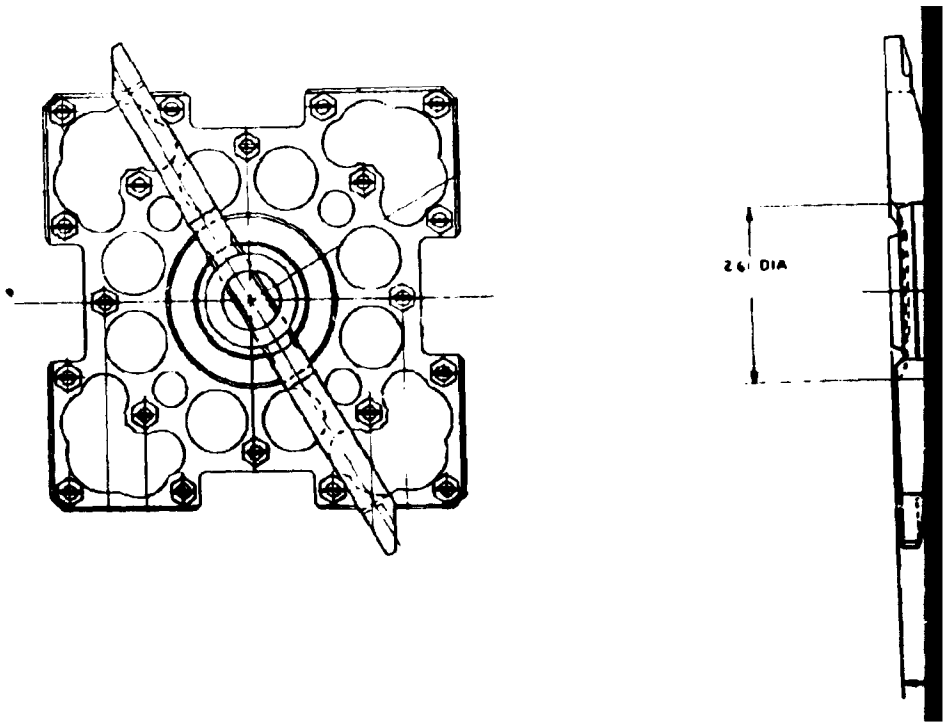

Diagram 2.2-27 Thimble Plugging Assembly Insert Configuration

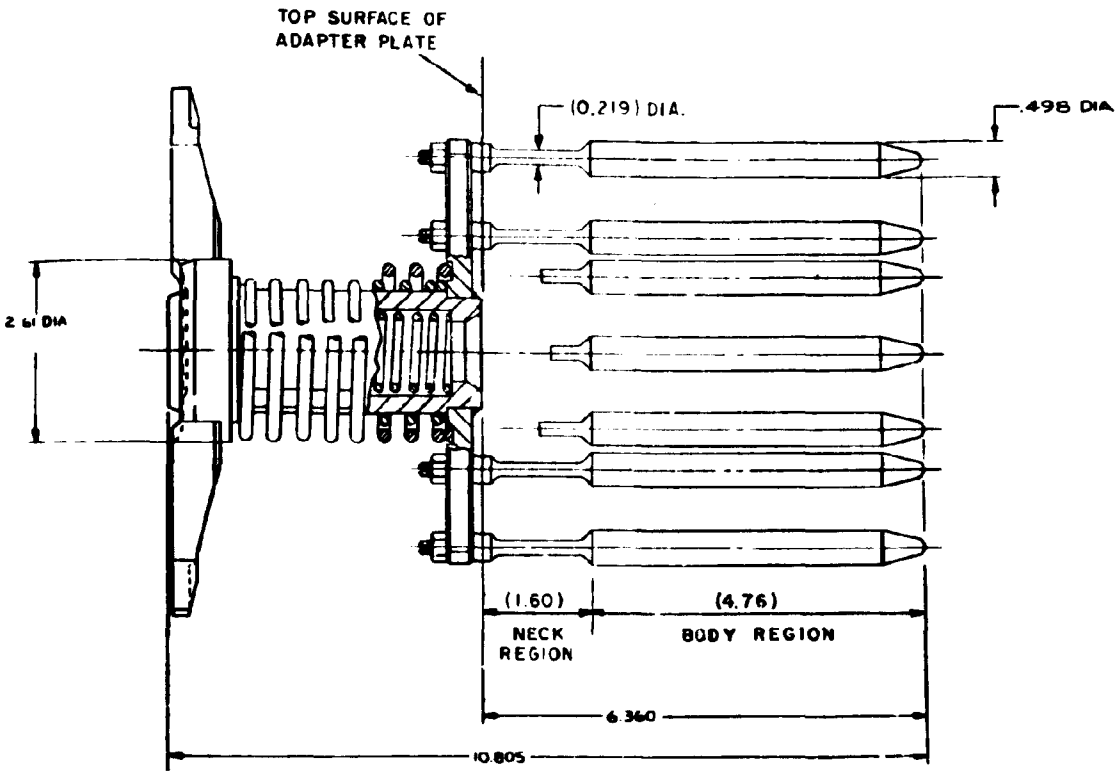

NOTE: ALL STAINLESS STEEL

t Configuration

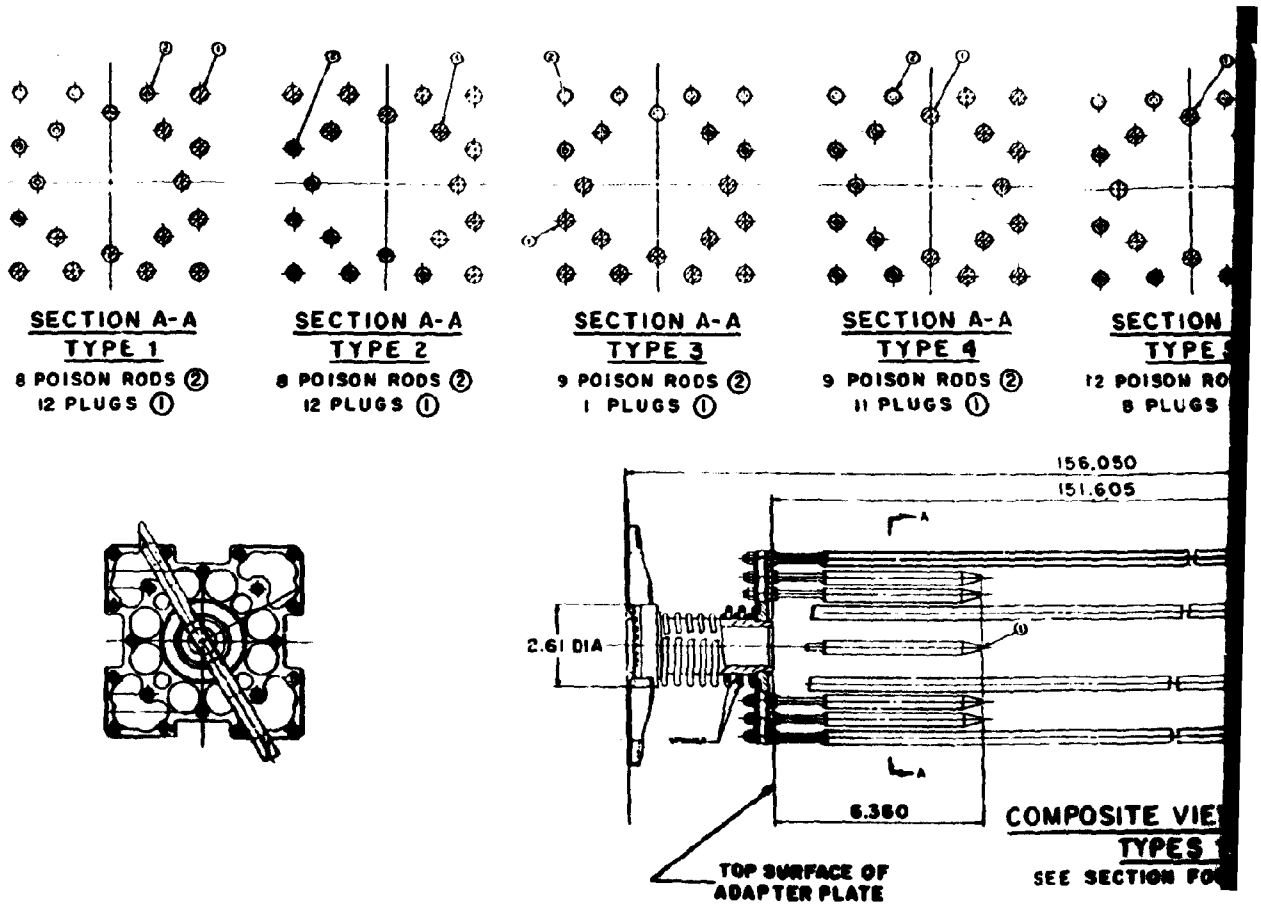

Diagram 2.2-28 Burnable Poison Assembly Insert Configuration

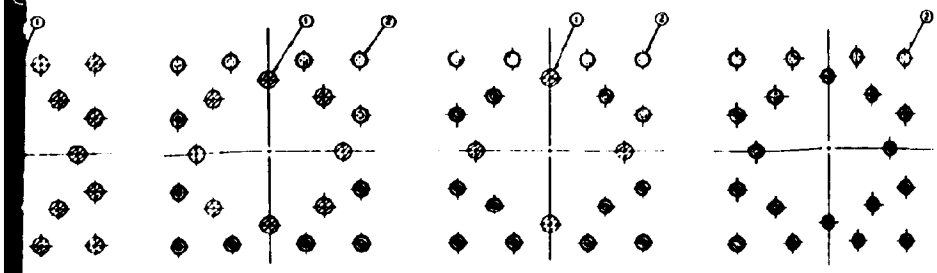

A-A
4
ODS ②
①

SECTION A-A
TYPE 5
12 POISON RODS ②
8 PLUGS ①

SECTION A-A
TYPE 6
16 POISON RODS ②
4 PLUGS ①

SECTION A-A
TYPE 7
20 POISON RODS ②

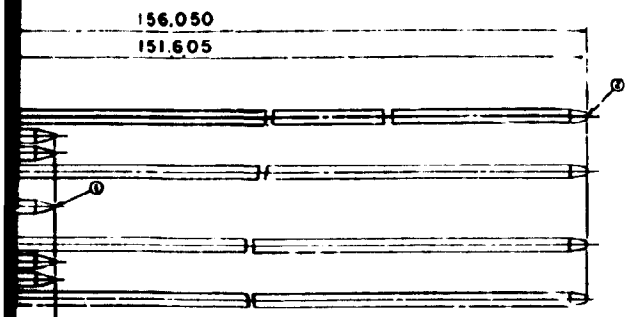

COMPOSITE VIEW FOR ASSEMBLIES
TYPES 1 THRU 7
SEE SECTION FOR SPECIFIC ARRANGEMENT

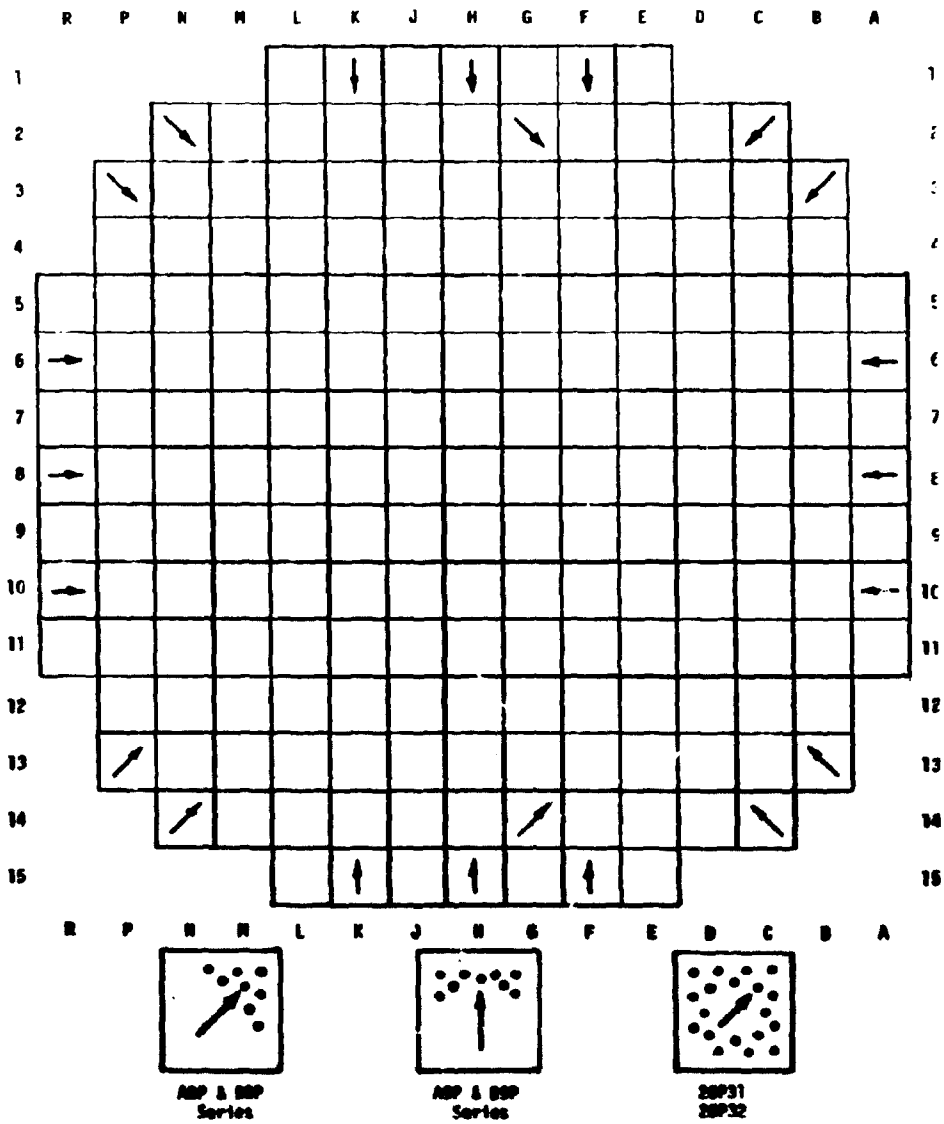

DIAGRAM 2.2-29 Orientations of Non-Symmetric Burnable Poison Assembly Inserts - Cycle 1

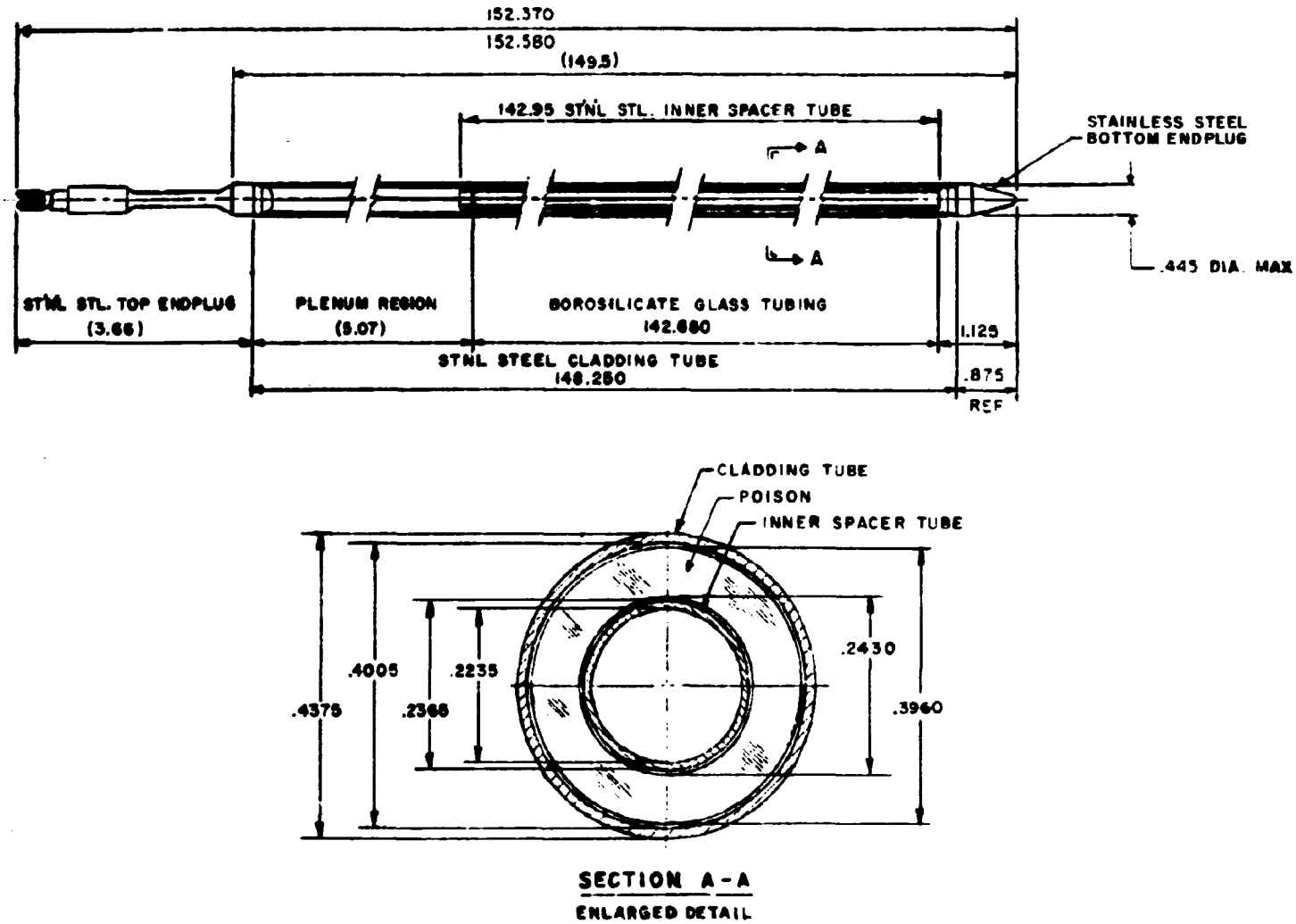

Diagram 2.2-30 Burnable Poison Rod Configuration

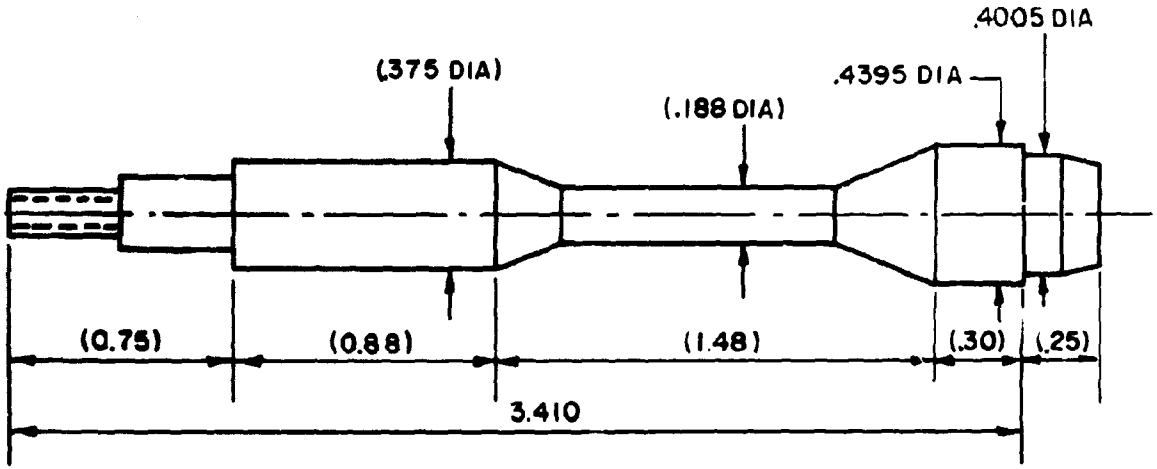

Diagram 2.2-31 Burnable Poison Rod Top Endplug Detail

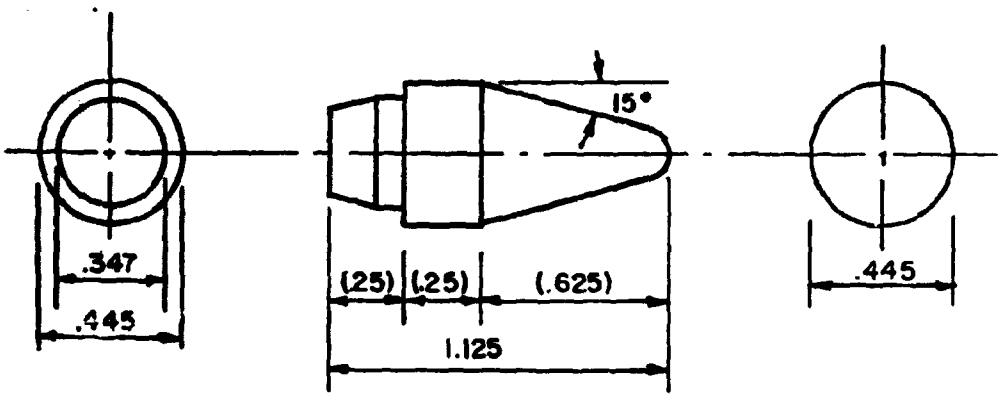

Diagram 2.2-32 Burnable Poison Rod Bottom Endplug Detail

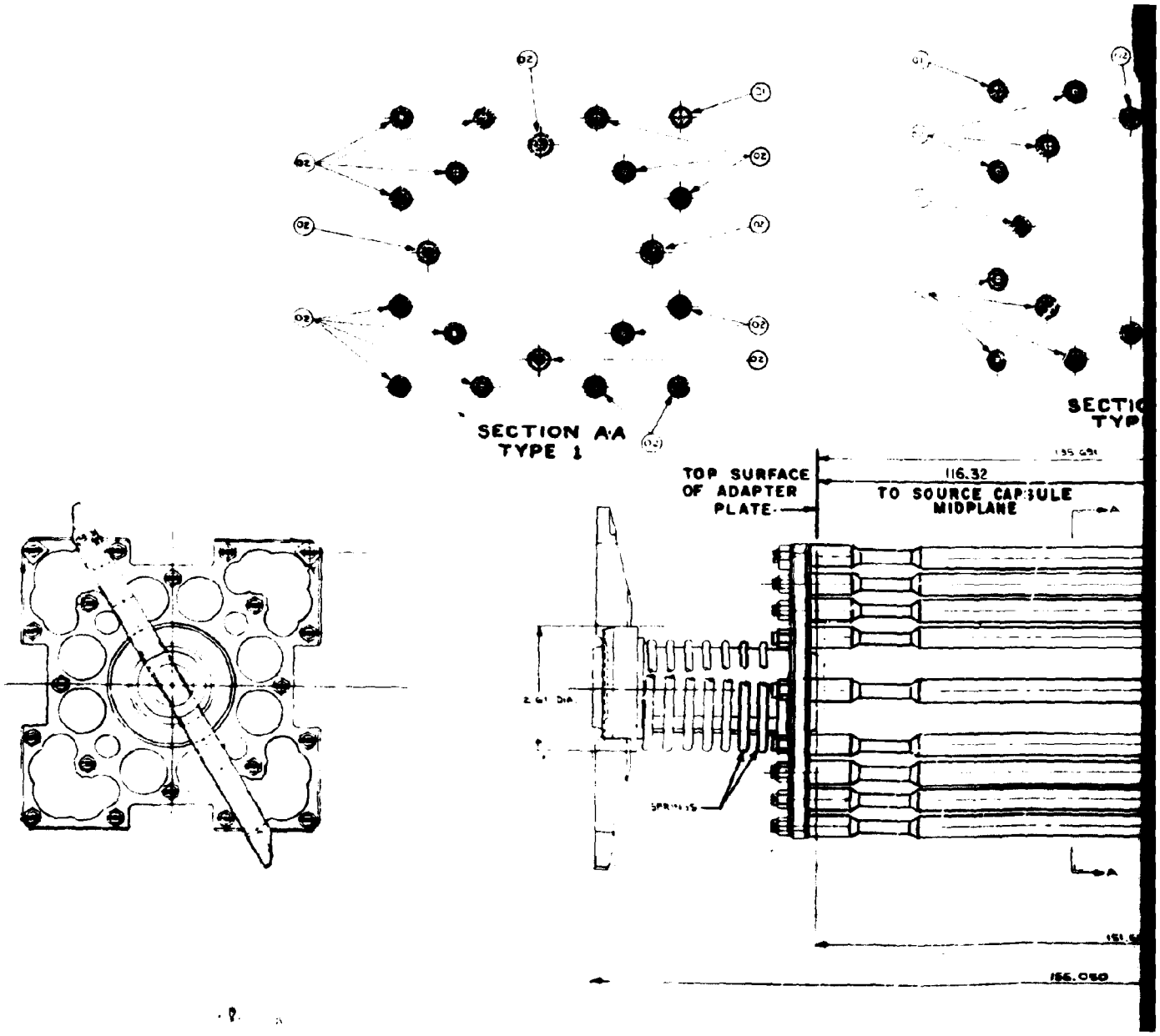

Diagram 2.2-33 (1) and (2) Primary Source Bearing Assembly Insert Configuration

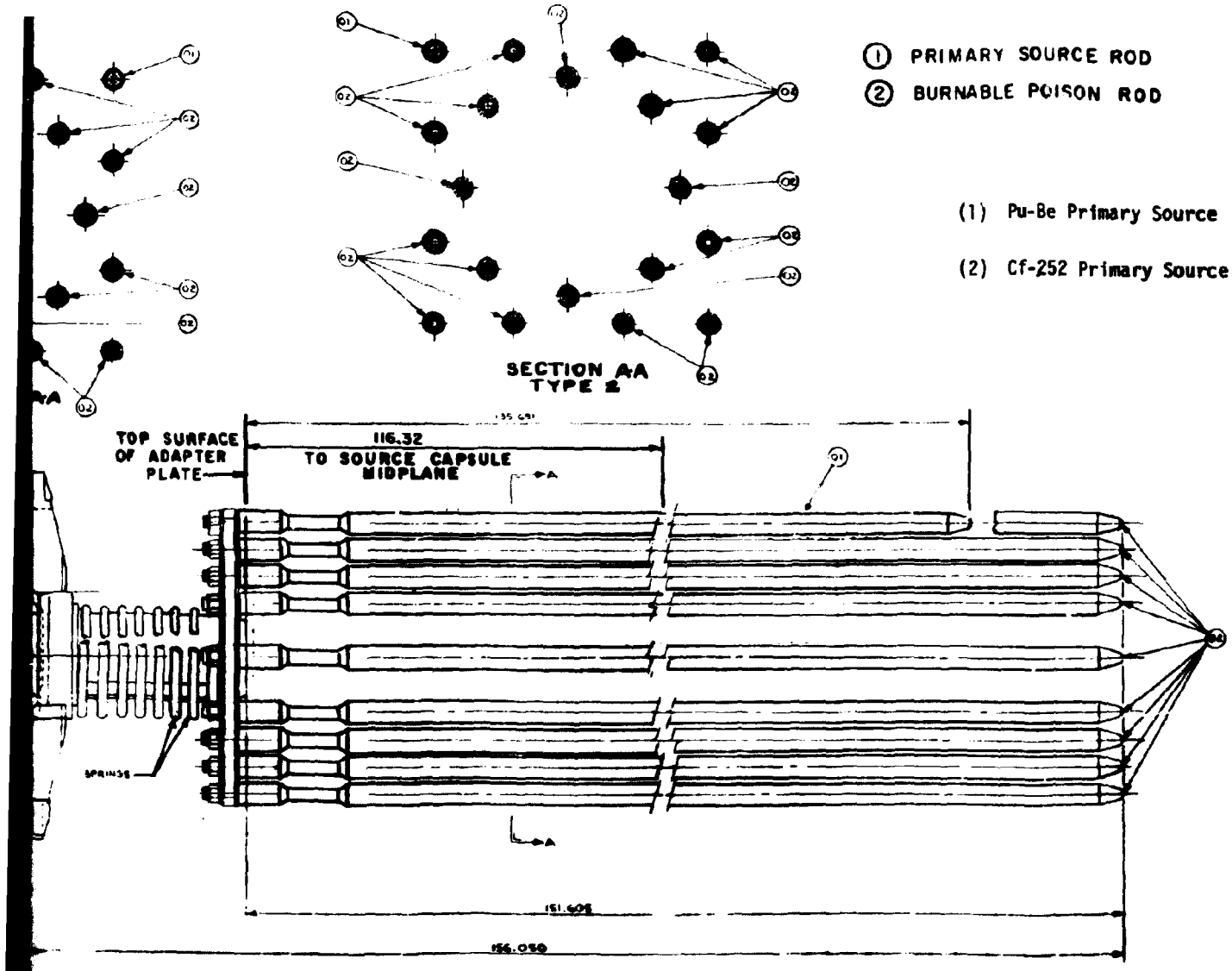

Assembly Insert Configuration

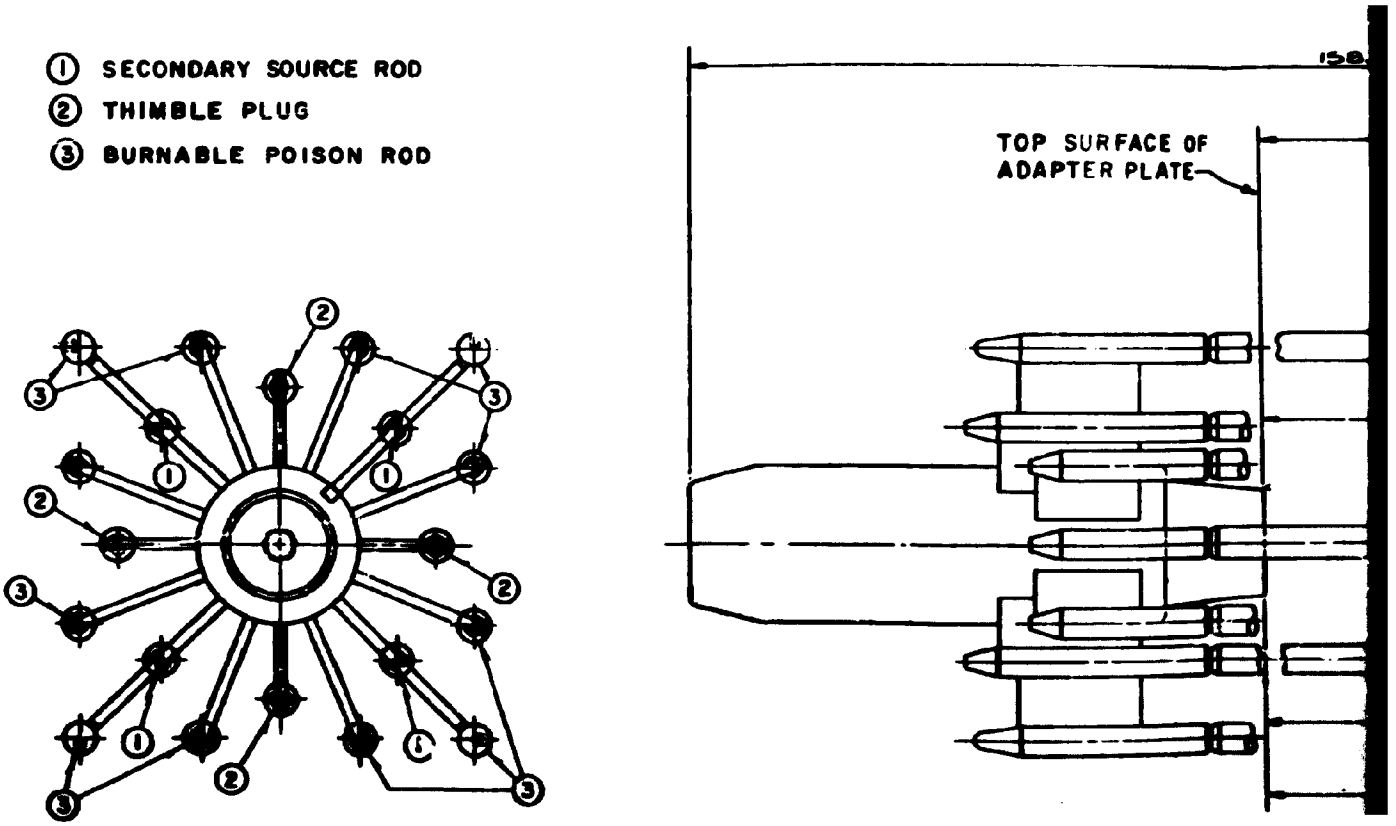

Diagram 2.2-33 (3) Secondary Source Bearing Assembly Insert Configuration

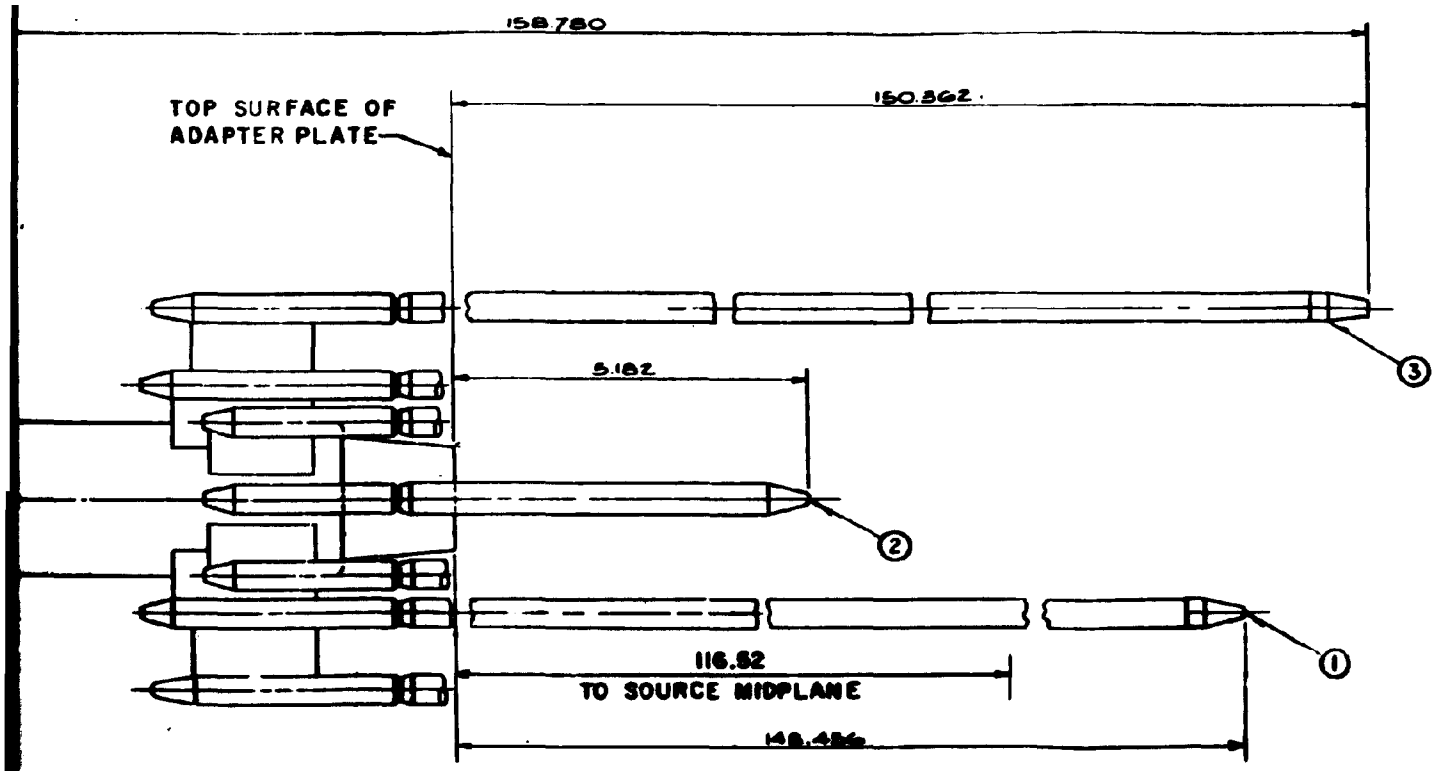

rt Configuration

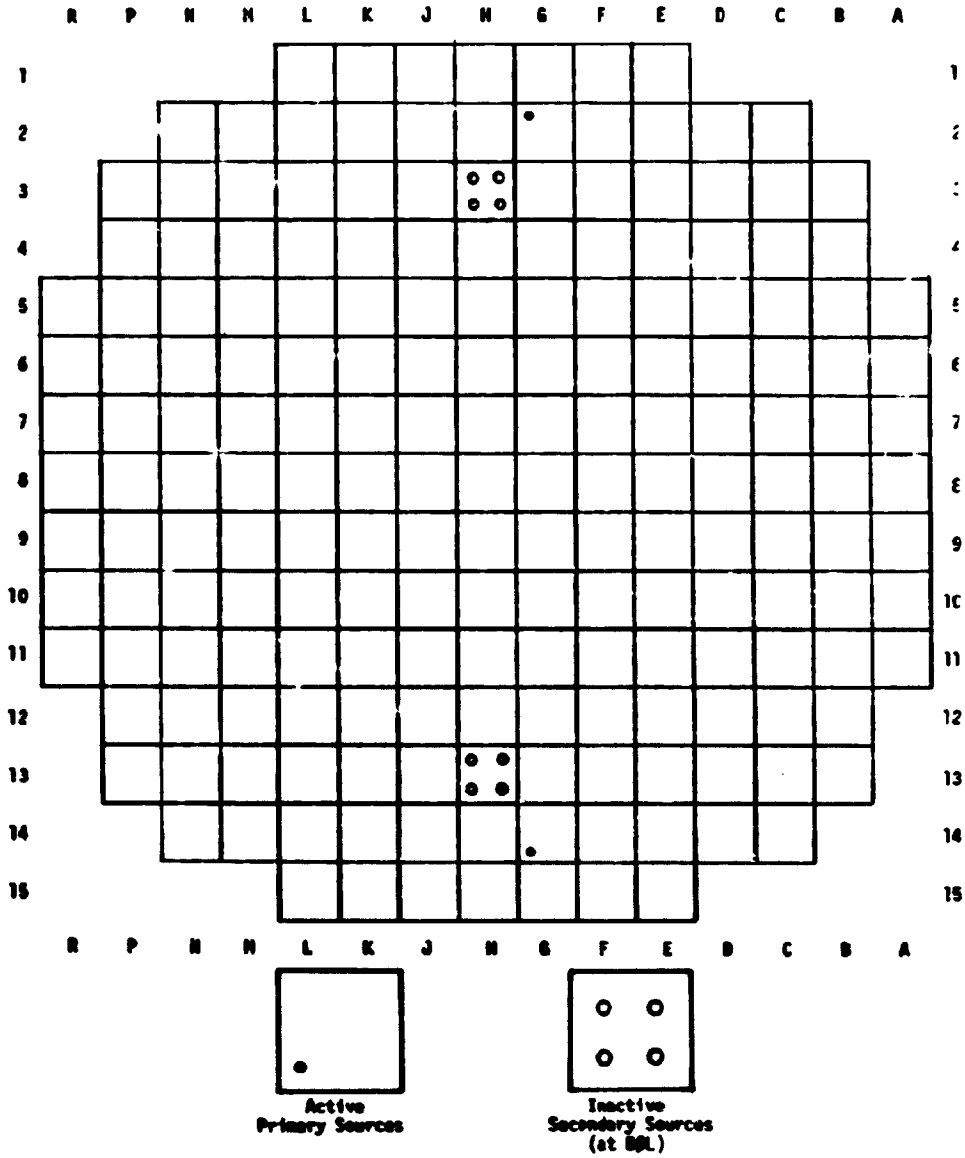

DIAGRAM : 2-36(1) Locations of Source Rods - Cycle 1

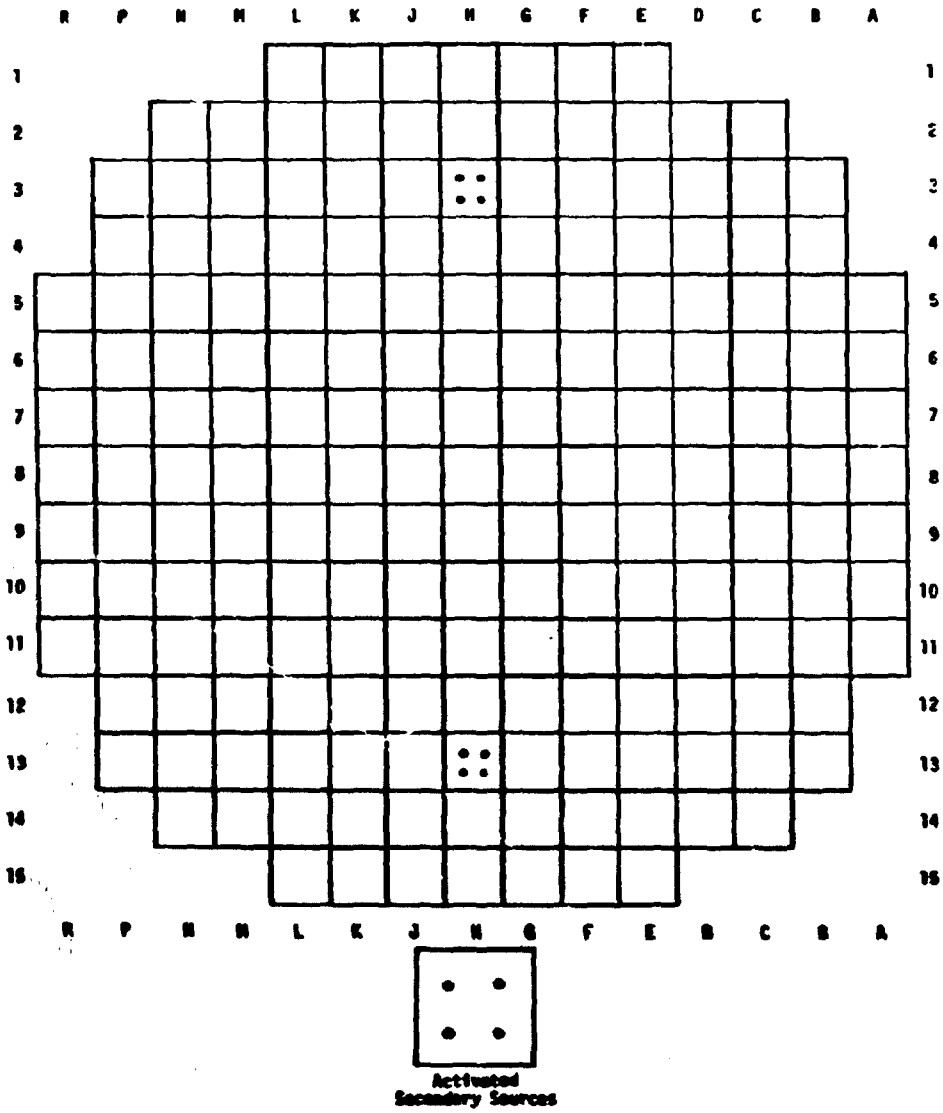

DIAGRAM 2.2-36(2) Locations of Source Rods - Cycle 2

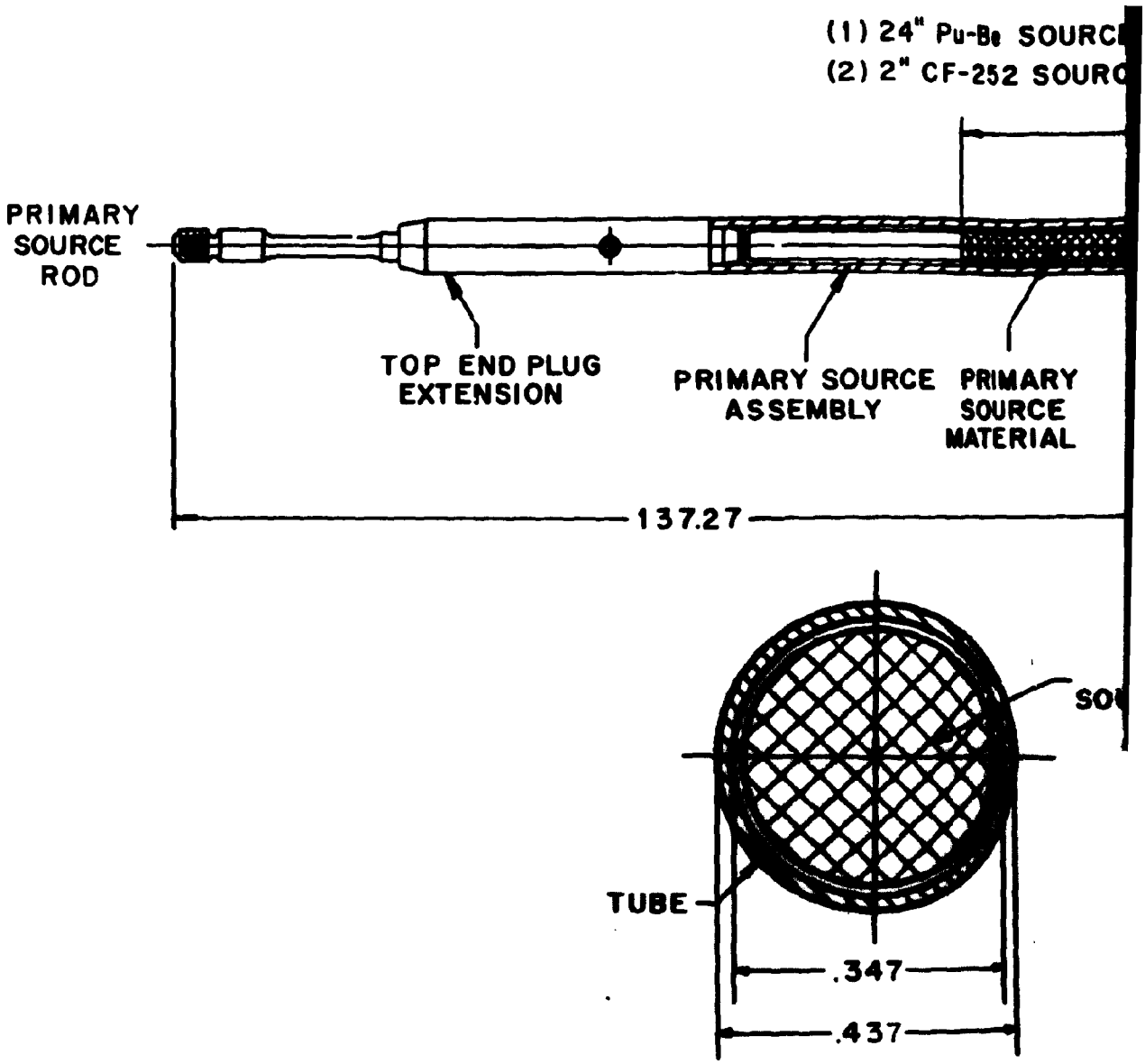

Diagram 2.2-35 (1) Pu-Be Primary Source Bearing Rod Configuration

Diagram 2.2-35 (2) Cf-252 Primary Source Bearing Rod Configuration

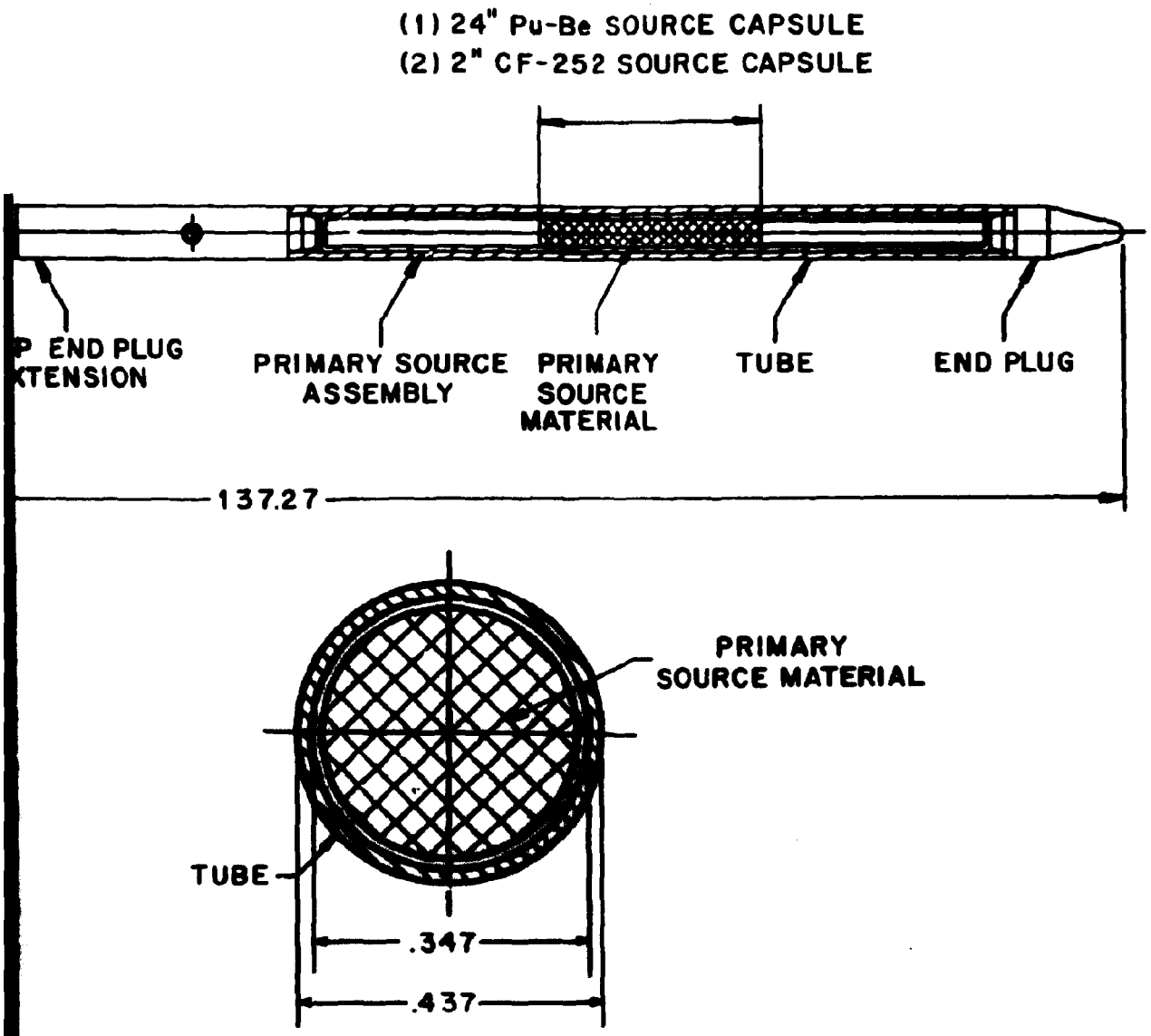

y Source Bearing Rod Configuration

ry Source Bearing Rod Configuration

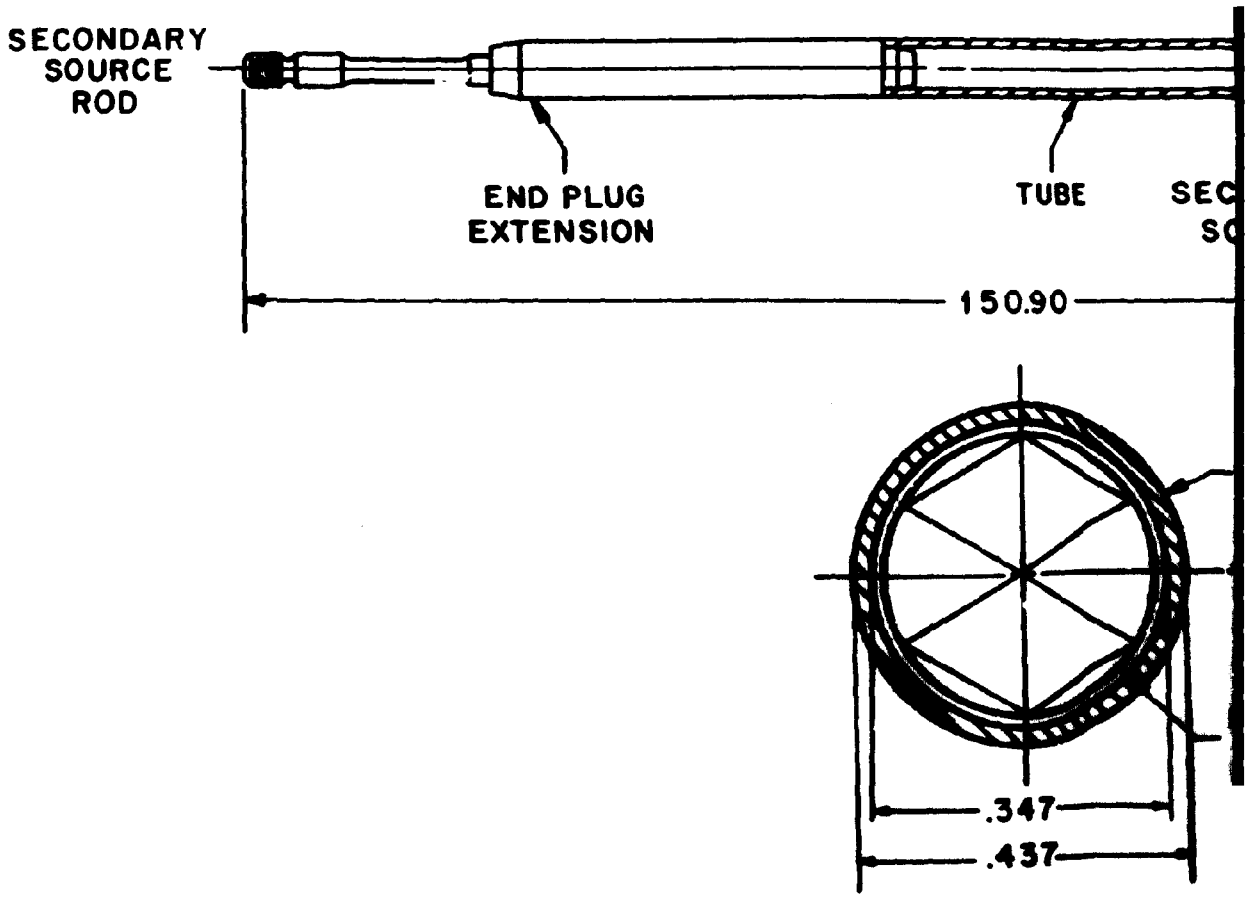

Diagram 2.2-35 (3) Sb-Be Secondary Source Bearing Rod Configuration

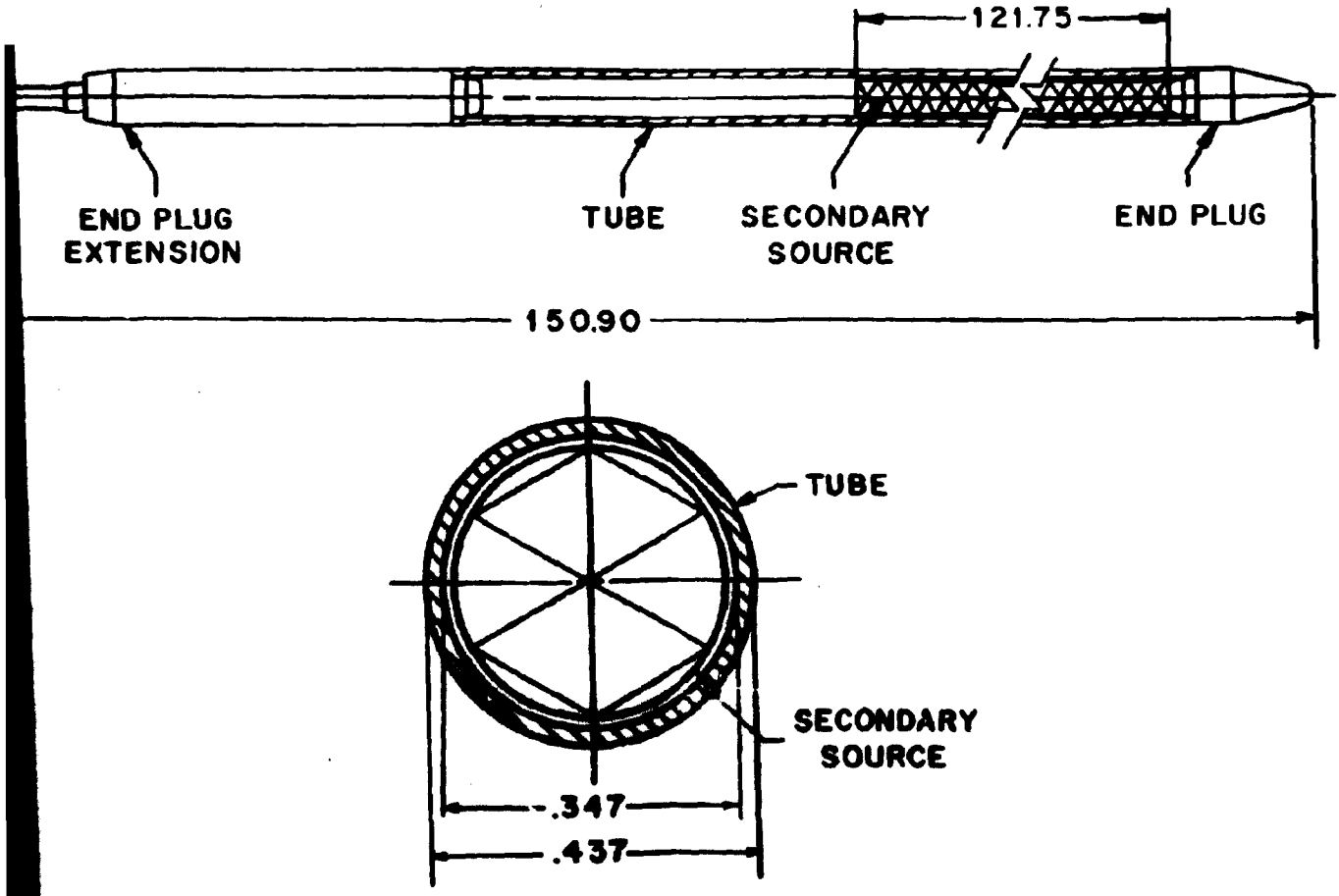

ary Source Bearing Rod Configuration

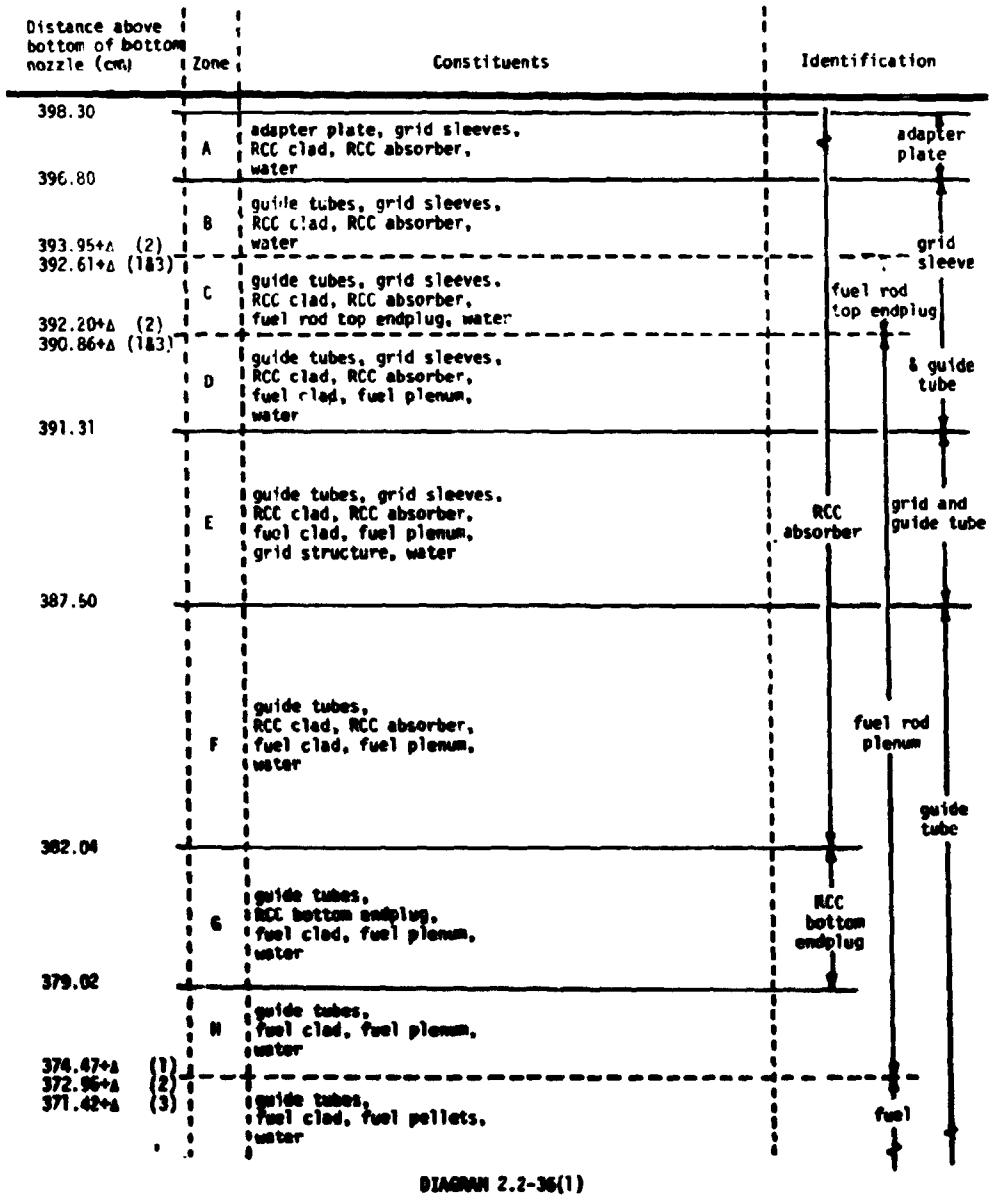

DIAGRAM 2.2-36(1)

Fuel Assembly with Fully Withdrawn RCCA Insert (item 8.2.1)

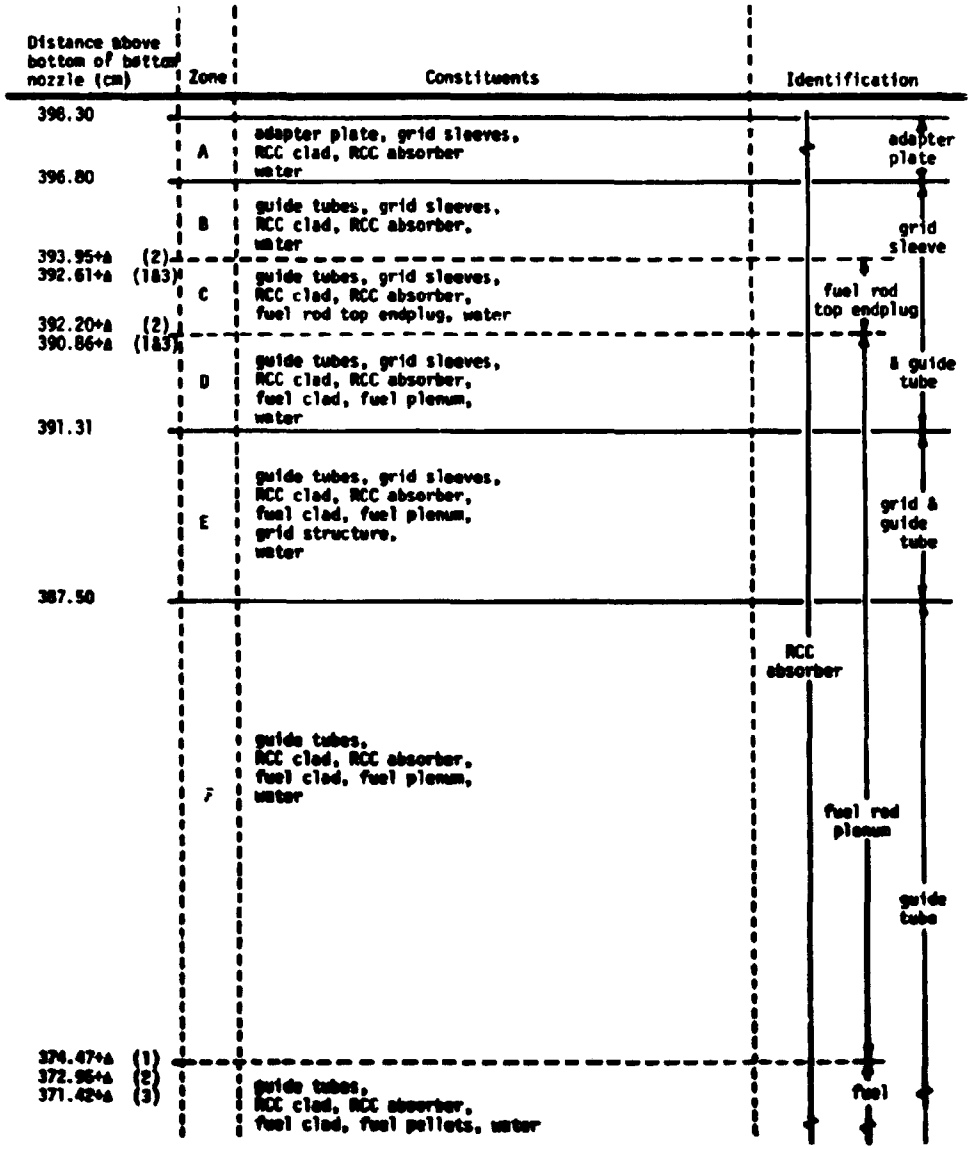

DIAGRAM 2.2-36(2)

Fuel Assembly with Partially Inserted RCCA Insert (item 8.2.2)

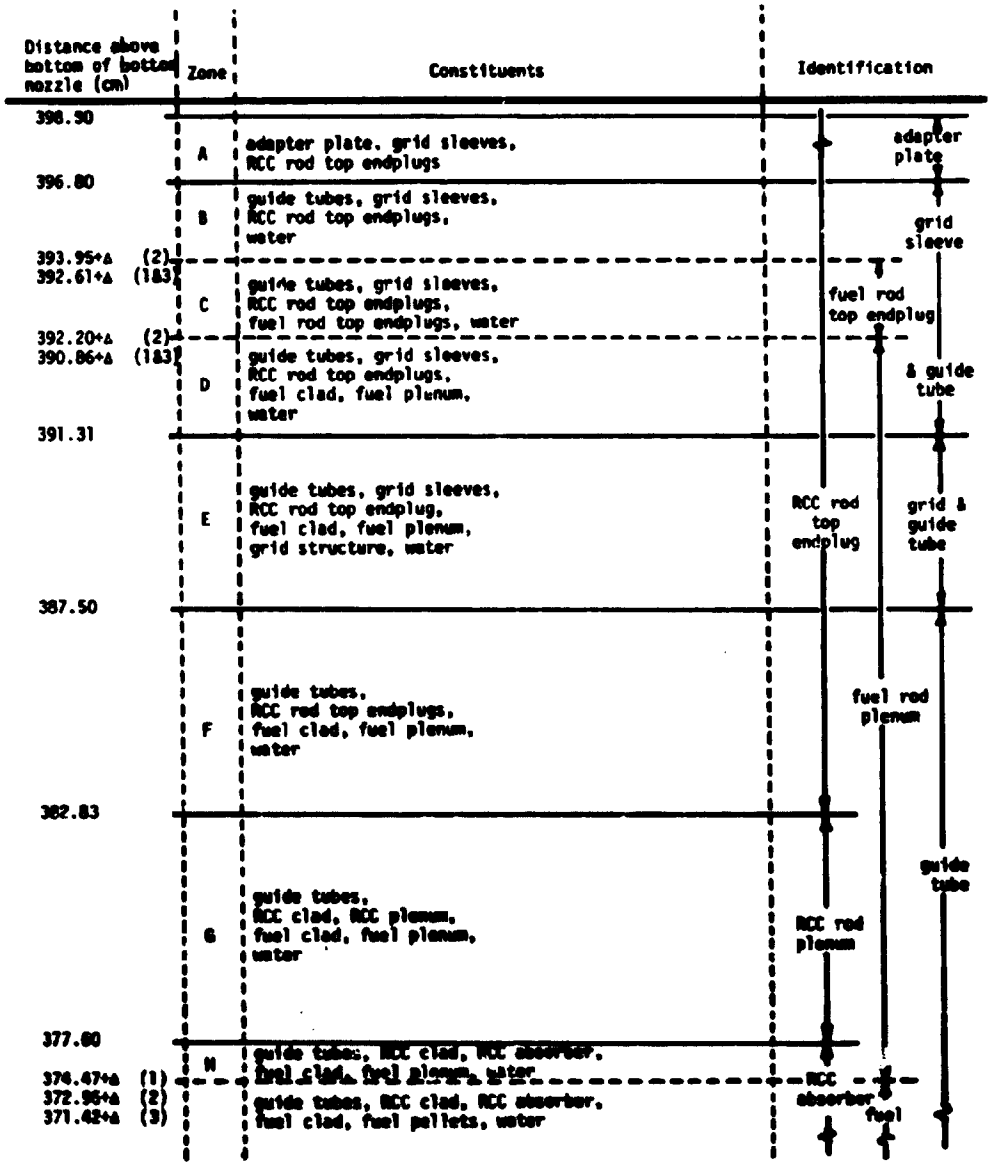

DIAGRAM 2.2-36(3)
Fuel Assembly with Fully Inserted RCCA Insert (Item 8.2.3)

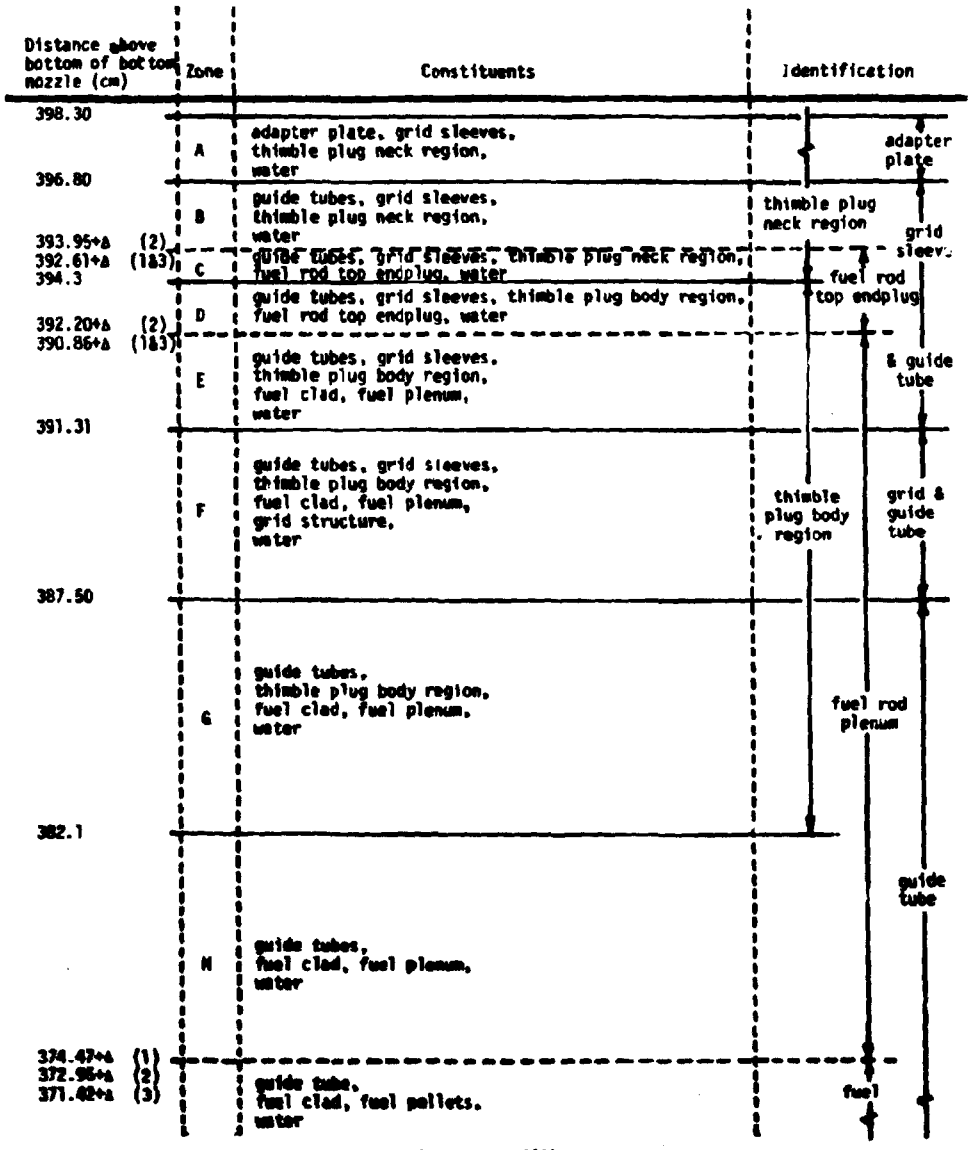

DIAGRAM 2.2-36(4)

Fuel Assembly with Thimble Plugging Assembly Insert (item 8.2.4)

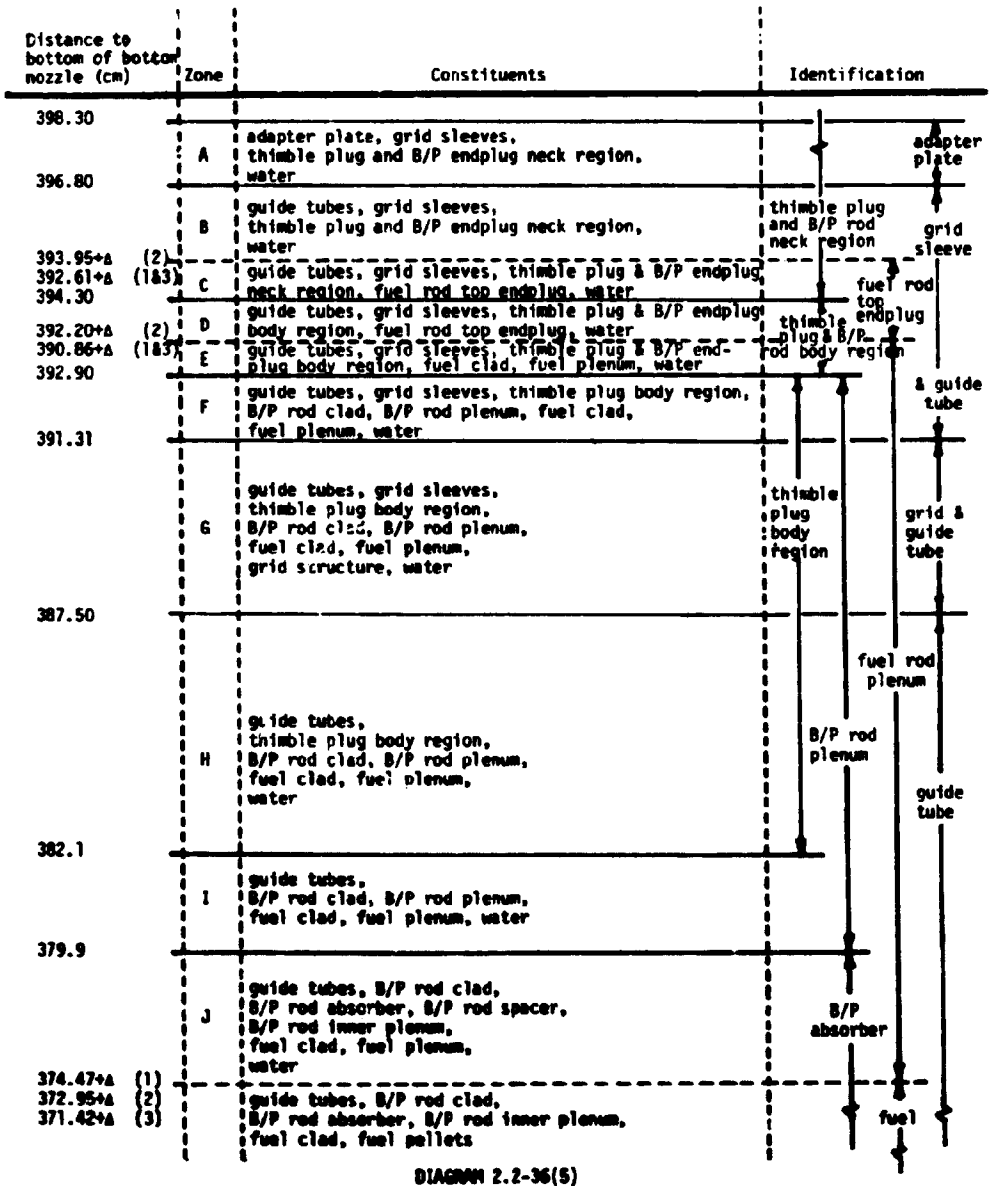

DIAGRAM 2.2-36(5)

Fuel Assembly with Burnable Poison Assembly Insert (item 8.2.5)

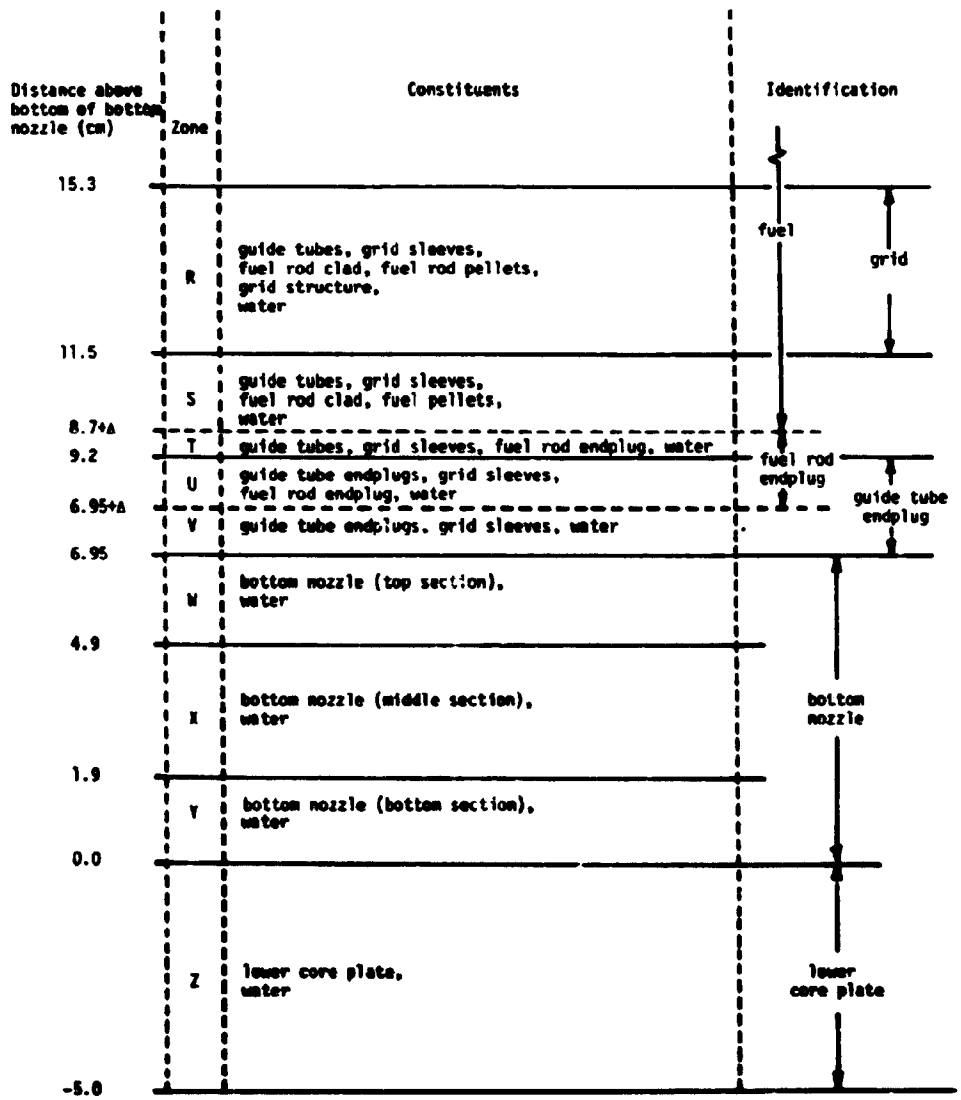

DIAGRAM 2.2-37(1)
Fuel Assembly with Fully Withdrawn RCCA Insert (item 9.2.1)
with Partially Inserted RCCA Insert (item 9.2.2)
or with Thimble Plugging Assembly Insert (item 9.2.4)

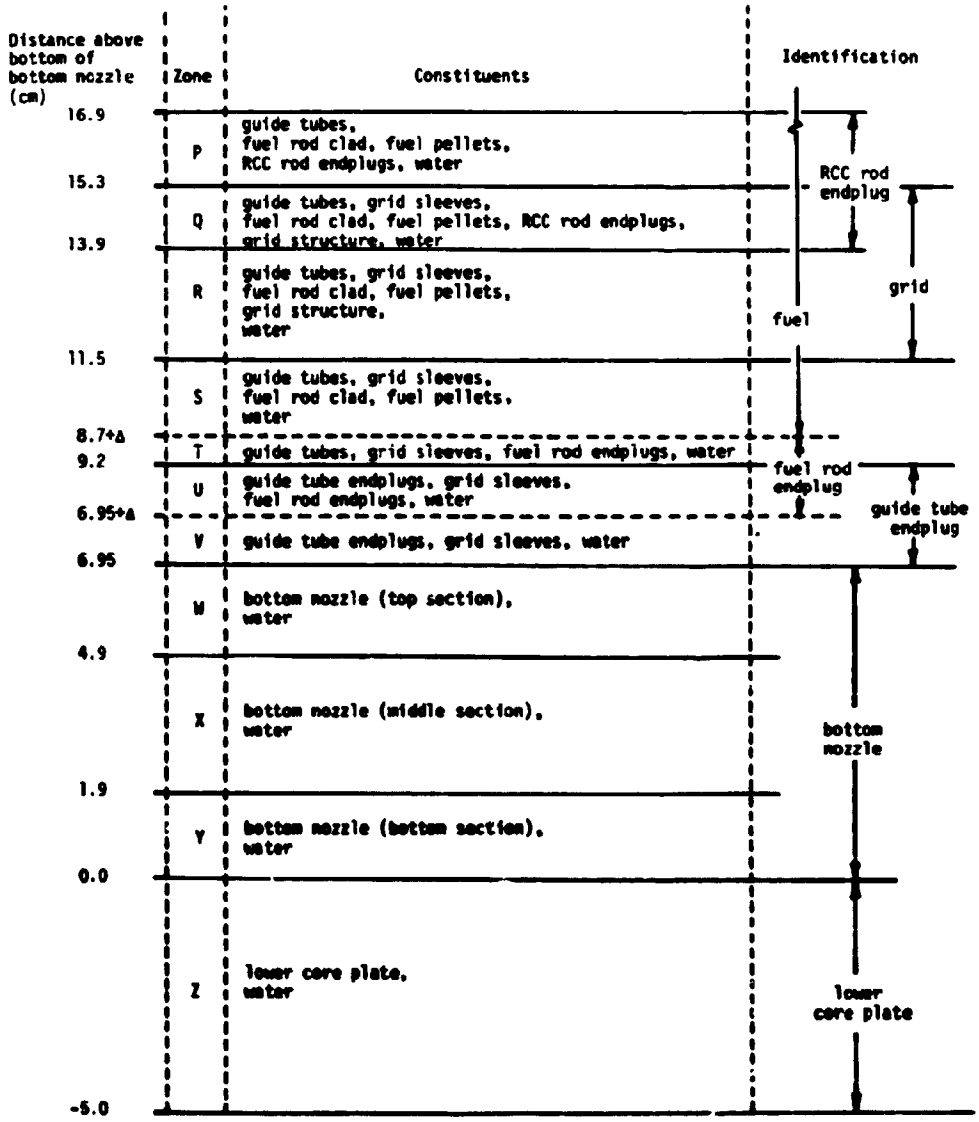

DIAGRAM 2.2-37(2)

Fuel Assembly with Fully Inserted RCCA Insert (item 9.2.3)

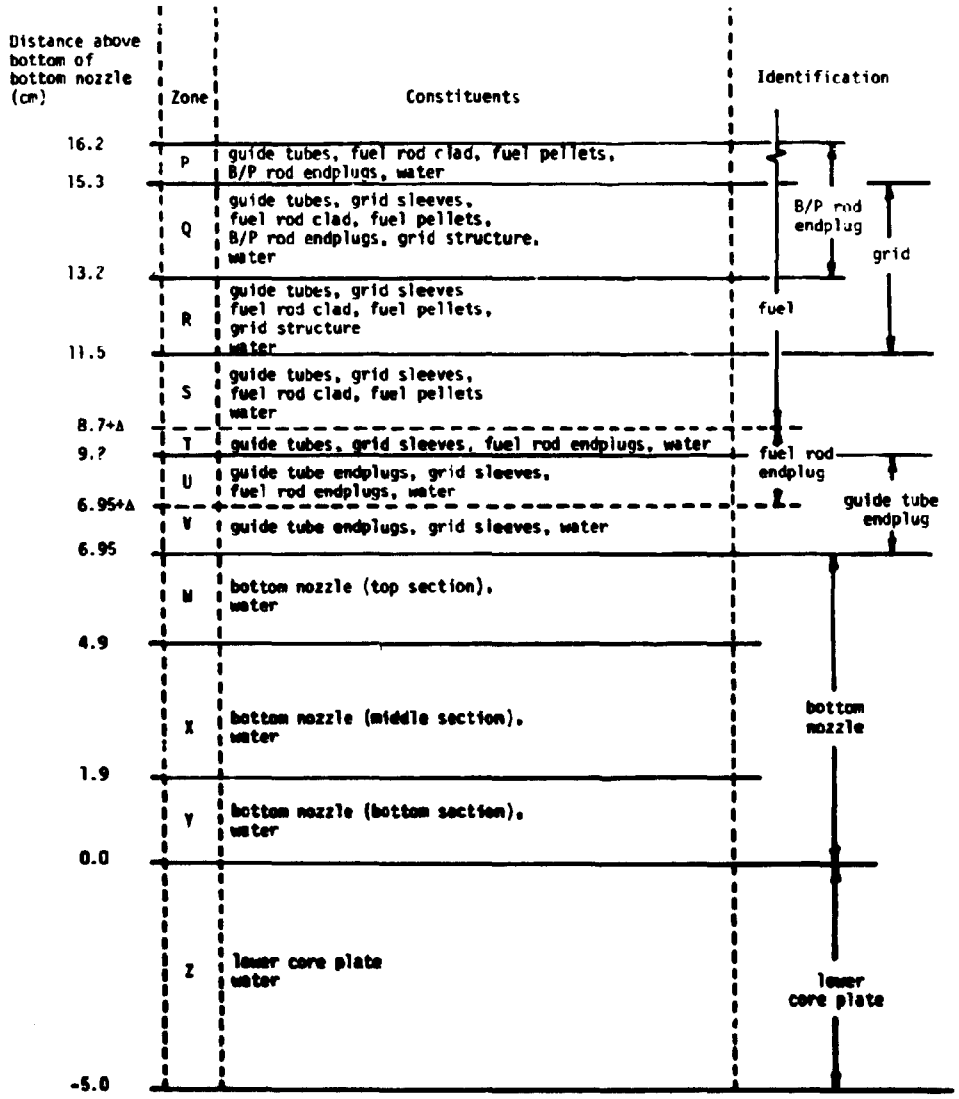

DIAGRAM 2.2-37(3)
Fuel Assembly with Burnable Poison Assembly Insert (item 9.2.5)
with Primary Source Bearing Assembly Insert (item 9.2.6)
or with Secondary Source Bearing Assembly Insert (item 9.2.7)

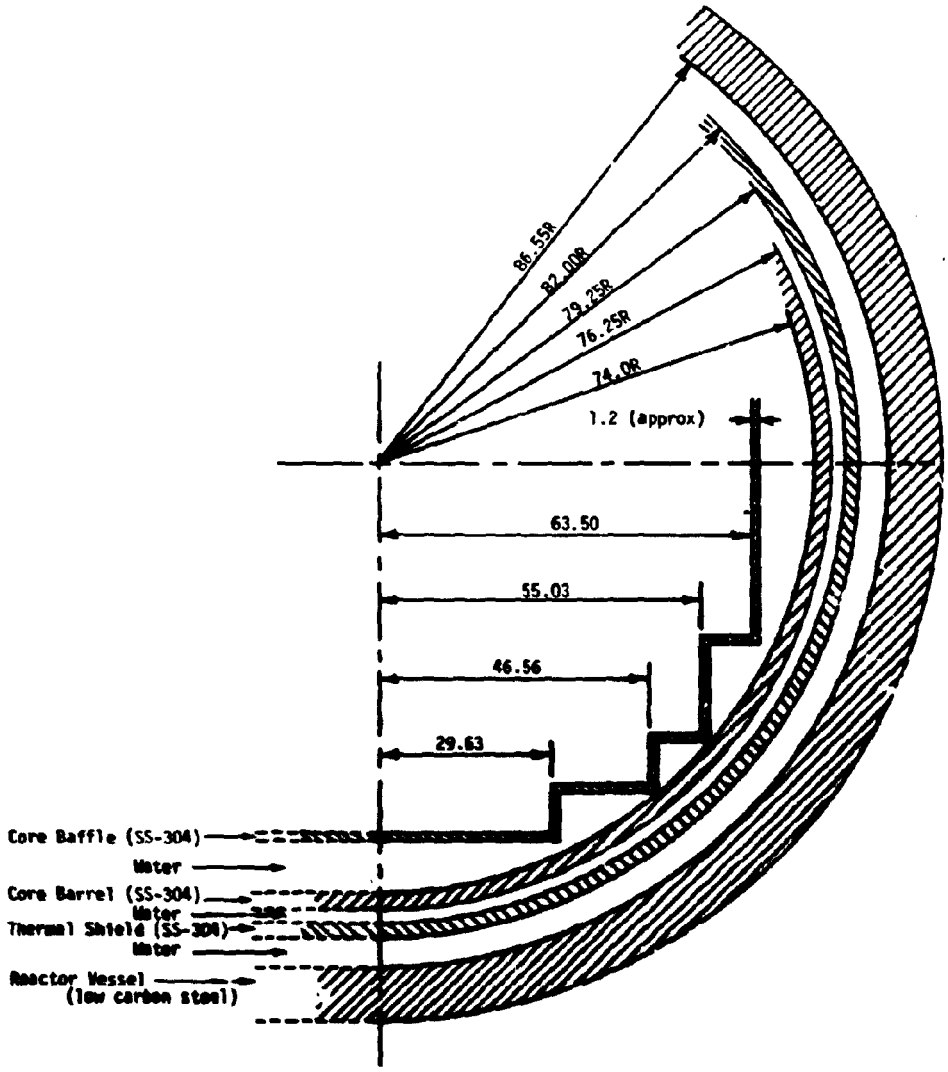

Diagram 2.2-38 Radial Reflector Configuration

CALCULATION SHEETS FOR TABLE 2.2

Item	Calculation/Comment	
2.7	Weight per Unit Length of Guide Tube	
	Above dashpot $[(1.384)^2 - (1.308^2]\ \frac{\pi}{4}\ (6.55)$	= 1.052 g/cm
	In dashpot $[(1.229)^2 - (1.153)^2]\ \frac{\pi}{4}\ (6.55)$	= 0.931 g/cm
2.10	Details of the dimensions and material of the instrumentation sheath have not been located in the open literature. However, dimensions scaled from W dwg. 1096E31 and details of the methods, shown in RESAR-3 figures 4.2-6 and 4.2-7, of connecting the instrumentation sheath to the adapter plate and to the lower nozzle strongly suggest that the instrumentation sheath is zircalloy with outer and inner diameters the same as the guide tube diameters in the region above the dashpot.	
2.17	Weight of One Spacer Grid	
	Outer straps (Inconel)	
	$4(1.50)(8.426)(0.0205)(2.54)^3(0.95)(8.22)$	= 132.6 g
	Inner straps (Inconel)	
	$28(1.50)(8.426)(0.0155)(2.54)^3(0.95)(8.22)$	= 701.9 g
	The 0.95 factor is an estimated allowance for the cutouts on either side of the dimples and at the strap intersections. Note that in some later FSAR's the grid inner strap thickness is given as 0.0135 inches rather than the 0.0155 inches noted here.	834.5 g
	Grid sleeves (Stainless Steel)	
	Assumed to be the same wall thickness as the guide tubes (0.015")	
	Length scaled from drawings (approx. 2.5")	
	$20\left\{\frac{\pi}{4}[(0.575)^2 - (0.545)^2]\ (2.5)(2.54)^3(7.9)\right\}$	= 170.8 g
2.20	Weight of Adapter Plate	
	$(8.426)^2(0.59)(2.54)^3(0.57)(7.9)$	= 3090 g
	Thickness scaled from drawings. The solid-metal fraction (0.57) is chosen to give the same total solid metal fraction with the guide tubes plugged as exists in the bottom nozzle (see item 2.24).	

Item	Calculation/Comment

2.24 Weight of Bottom Nozzle

Estimate of hole fraction in top section

117 holes at 0.50" dia. = 22.97 sq. in.
80 holes at 0.25" dia. 3.93 sq. in.
26.90 sq. in.

Total area $(8.426)^2$ = 71.00 sq. in.

hole fraction = 26.90/71.0 = 0.3789 — 0.38
solid metal fraction = 1.0 - 0.38 = — 0.62

Top section

$(8.426)^2(0.78)(2.54)^3(0.62)(7.9)$ = 4445 g

Sides

$4(8.426)(1.18)(0.28)(2.54)^3(7.9)$ = 1442 g

Bottom corners

$\{2[(1.375)^2-(0.50)^2/2] + 2[(1.375)^2-(0.50)^2/2 - \frac{\pi}{4}(0.81)^2]\}$

$* (0.78)(2.54)^3(7.9)$ = 609 g

6496 g

Dimensions scaled as necessary from W dwg. 1096E31

2.27 Weight per Unit Length of Movable Detector Thimble

The movable detector thimbles are re-entrant stainless steel thimbles that pass from the bottom of the reactor vessel up through the lower internals and into the instrumentation sheaths of the 58 assemblies that can be accessed by the movable detector system. No dimensions of the thimbles have been located in the open literature. The movable detectors currently in use are 0.188 inches (0.477 cm) in diameter; the instrumentation sheath inside diameter is believed to be 0.514 inches (1.308 cm). Hence it is readily inferred that the inside diameter of the movable detector thimble is no less than about 0.50 cm and that the outside diameter is no more than about 1.30 cm. With these limiting dimensions, the weight per unit length of the movable detector can be no more than

$\{(1.30)^2 - (0.50)^2\} \frac{\pi}{4} (7.9)$ = 8.9 gm/cm

in those assemblies accessible by the movable detector system, and is zero in all other assemblies.

The thimbles extend at least several centimeters beyond the top of the fuel column in the fuel rods, as evidenced by the presence of the top reflector peak in all movable detector flux traces

---

Item	Calculation/Comment	
3.2	It is believed (personal communication from Comm Ed personnel) that the fuel rods were uniformly raised through the fuel assembly grids so that a clearance of about 2 cm existed between the bottoms of the fuel rod endplugs and the top surface of the lower nozzle. A non-proprietary value of this distance (designated here as Δ cm) has not been located. Various non-proprietary drawings are inconstant on this point.	
3.6	Weight per Unit Length of Fuel Tube	
	$\frac{\pi}{4}[(1.072)^2 - (0.948)^2](6.55)$	= 1.284 g/cm
3.8	Weight of a Fuel Tube Endplug	
	$\frac{\pi}{4}\{(0.422)^2(0.250) + (0.344)^2(0.188) + (0.373)^2(0.078) + (0.327)^2(0.172)\}(2.54)^3(6.55)$	= 8.09 g
	Dimensions scaled as necessary from W dwg. 271C427.	
	The top and bottom endplugs appear to be identical, except for the presence of a filling hole in the top endplug, presumably for pressurization of the rod after assembly.	
3.17	Estimation of Pellet End Dish Fraction	
	Region 1 fuel	
	$\frac{\pi}{4}(0.9294)^2(365.76)$ = 248.14 cm^3 of fuel/rod including dish volume	
	$(248.14)(204)(65)$ = 3290300 cm^3/region	
	From Unit 2 Fuel Records	
	Region 1 contained 29,479,632 g of U	
	$29{,}479{,}632 \times \frac{270}{238}$ = 33,443,280 g of UO_2	
	Apparent density of UO_2 = $\frac{33{,}443{,}280}{3{,}290{,}300}$	= 10.164 g/cm^3
	Quoted density from Unit 2 Cycle 2 Reload Safety Evaluation	= 10.28 g/cm^3
	Actual fraction of volume occupied by UO_2 $\frac{10.164}{10.28}$	= 0.989
	Dish fraction	= 0.011

Item	Calculation/Comment

3.17 (cont.) **Estimation of Pellet End Dish Fraction**

Corresponding calculations for the other two regions yield:

Region	Fuel Column Length (cm)	Total Weight of U in Region (gm)	Apparent Density g/cm^3	Quoted Density g/cm^3	UO_2 Volume Fraction
2	364.24	28,570,093	10.046	10.17	0.988
3	362.71	28,882,208	10.199	10.32	0.988

Average value of UO_2 in volume fraction = 0.9883
dish fraction = 0.0117

3.18 **Density of Region 4 Fuel**

$\frac{\pi}{4}(0.9294)^2(365.76)(204)(60)(0.9883)$ = 300166 cm^3/region

From fuel records

Region 4 contained 27,396,376 g of uranium

$27{,}396{,}376 \times \frac{270}{238} = 31{,}079{,}922$ g of UO_2

density $= \frac{31{,}079{,}922}{300{,}166}$ = 10.354g/cm^3 → 94.39% theoretical

---

4.2 **Determination of Distance from Bottom of an RCC Rod to the Bottom of the Bottom Nozzle**

From figures 10.5 through 10.12 of the Unit 2 Cycle 1 Startup Report the tips of the RCC absorber sections pass through the midplanes of grids at about 79 and 121 steps withdrawn. These grids are the ones with midplanes at 56.06 inches and 82.25 inches above the bottom of the bottom nozzle. The RCC endplug is 1.187 inches long (scaled from FSAR fig. 3.2.3-9 and RESAR-3 fig. 4.2-9).

$56.06 = 79(0.625) + 1.187 + x$ $\quad x = 5.50''$
$82.25 = 121(0.625) + 1.187 + x$ $\quad x = 5.44''$

average distance is 5.47" or 13.9 cm

Item	Calculation/Comment

4.5 Estimation of the Lengths of the Absorber Tube, the Endplug and the Plenum Region in RCC Rods

The FSAR is internally inconsistent.

Figure 3.2.3-4a gives for the length of the absorber section 144.5 inches

Table 3.2.3-1 gives for the same dimension 142.0 inches

While scaling dimensions from fig. 3.2.3-9 yields slightly less than 140.0 inches

The overall length from the bottom of the RCC rod to the top of the adapter plate is 156.82 - 5.47 = 151.35 inches. If we accept 142 inches as the most likely length of the absorber itself (which guarantees that the top of the absorber column is at least as high as the top of the fuel column) the plenum region plus that part of the top endplug that is below the top of the adapter plate are together about 8 inches. Scaling fig. 3.2.3-9 of the FSAR gives a plenum length of about 2 inches, leaving 6 inches for the endplug below the top of the adapter plate and an absorber tube (cladding) length of about 144.5 inches.

The FSAR's for later units with 17x17 fuel give explicitly 142.3 inches for the length of the absorber in RCCA rods.

4.7 Weight per Unit Length of Absorber Tube (Cladding)

$$\frac{\pi}{4}\{(1.130)^2 - (0.882)^2\}(7.9) = 3.1 \text{ g/cm}$$

4.9 No explicit statement has been found regarding the materials for the RCC rod top and bottom endplugs. However, it is inferred on the basis of RESAR-3 page 4.2-46 and of the close similarity between the clad for RCC rods and burnable poison rods that the endplugs are SS-304.

Weight of RCC Rod Top Endplug Below Top of Adapter Plate

$$\frac{\pi}{4}(1.130)^2(7.9) = 7.9 \text{ g/cm}$$

Item	Calculation/Comment	
4.11	<u>Weight of RCC Rod Bottom Endplug</u>	
	$\frac{\pi}{4}\{(0.445)^2(0.250) + (0.347)^2(0.250) + (0.304)^2(0.625)\}$	
	$* (2.54)^3(7.9)$	= 14.0 g
	Dimensions scaled as necessary from FSAR fig. 3.2.3-9	
4.13	No mention has been found of the nature of the gas initially in the plenum region of the RCC rods, the burnable poison rods or the source rods. Since the clad on all three types of rods is free standing stainless steel there is no need to pressurize the rods and, in fact, drawings of the top endplugs show no provision for filling, as is evident in W dwg. 271C427 of the fuel rods.	
	Accordingly, it is assumed that the gas in the plenum regions of the RCC rods, the burnable poison rods and the source rods is the air remaining after welding.	
4.14	No direct evidence of the presence of a hold down spring in the plenum region of the full and/or part length RCCA rods in Zion Unit 2 has been found in the open literature. However, both RESAR-3 fig. 4.2-9 and the FSAR's of later units with 17x17 fuel assemblies show clearly a hold down spring in the RCCA absorber rods.	
4.16	From RESAR-3 page 4.2-46	
	"Sufficient diametral and end clearance is provided (in the RCC rods) to accommodate relative thermal expansion."	
5.7	<u>Weight per Unit Length of Thimble Plugs</u>	
	Outside of neck region	
	$\frac{\pi}{4}(0.498)^2(2.54)^2(7.9)$	= 9.93 g/cm
	In neck region	
	$\frac{\pi}{4}(0.219)^2(2.54)^2(7.9)$	= 1.92 g/cm

Item	Calculation/Comment

6.4 Length of the Plenum Region in Burnable Poison Rods

FSAR fig. 3.2.3-12 gives for the total length of a burnable poison rod 150.4 inches. W dwg. 1096E31 and RESAR-3 fig. 4.2-13 give for the distance from the top of the adapter plate to the bottom of a burnable poison rod 151.6 inches with an additional nominal 1" for the thickness of the adapter plate plus the restraining nut. The W drawing dimension is very nearly consistent with the previously specified dimensions of RCC rods and is assumed to be valid. Therefore, the plenum region of the burnable poison rods as given in FSAR fig. 3.2.3-12 should be increased by about 2.14 inches to be consistent with the W drawing and with drawings of burnable poison rods found in the FSAR's of other plants having 15x15 fuel assemblies, and so that the absorber section of the burnable poison rods matches fairly closely in length and position the absorber section of the RCC rods.

The length of the burnable poison cladding tube is increased accordingly to

$146.11 + 2.14 = 148.25$ inches or 376.6 cm

6.7 Weight per Unit Length of the Burnable Poison Cladding Tube

$\frac{\pi}{4}\{(1.116)^2 - (1.017)^2\}(7.9)$ = 1.31 g/cm

6.11 Weights per Unit Length of the Burnable Poison Top Endplug

Above the neck region

$\frac{\pi}{4}(0.95)^2(7.9)$ = 5.60 g/cm

In the neck region

$\frac{\pi}{4}(0.48)^2(7.9)$ = 1.43 g/cm

Below the neck region

$\frac{\pi}{4}(1.12)^2(7.9)$ = 7.78 g/cm

6.13 Weight of Burnable Poison Bottom Endplug

The burnable poison bottom endplug is believed (FSAR fig. 3.2.3-12 compared to FSAR fig. 3.2.3-9) to be identical to the RCC rod bottom endplug.

Item	Calculation/Comment	
6.16	Weight per Unit Length of Burnable Poison Inner Spacer Tube	
	$\frac{\pi}{4}\{(0.601)^2 - (0.568)^2\}(7.9)$	= 0.24 g/cm
6.19	Weight per Unit Length of Burnable Poison Absorber	
	$\frac{\pi}{4}\{(1.006)^2 - (0.617)^2\}(2.28)$	= 1.13 g/cm
	B_2O_3 weight fraction = $\frac{0.0603 \text{ g B/cm}^*}{1.13 \text{ g/cm}} \times \frac{70}{22}$	= 0.17
	*From item 6.20 in Table 2.2	
7.8	Few details of the designs of the primary and secondary source rods and of the burnable poison rods used with the secondary source rods in Zion Unit 2 have been located in the open literature. The RESAR-3 drawings of the top endplugs of conventional burnable poison rods are inconsistent with W dwg. 1096E31 and with FSAR fig. 3.2.3-12. Hence, the details of the source rods and associated burnable poison rods given in RESAR-3 are suspect and in general are not used here. On the basis of a comparison of RESAR-3 fig. 4.2-13 and fig. 4.2-14 with FSAR fig. 3.2.3-9, it appears that the bottom endplugs of the primary and secondary source rods and of the associated burnable poison rods are identical to the bottom endplugs of the RCCA absorber rods. The top end plugs of the primary sources are probably similar, if not identical, to the endplugs of conventional burnable poison rods. Since the secondary source rods and the associated burnable poison rods are attached to spider assemblies that are interchangeable with regular RCCA spiders the top endplugs of these rods are probably similar to, but shorter than, the RCCA rod top endplugs and the plenum regions of these rods are probably longer than those of RCCA rods.	
7.10	Weight per Unit Length of Source Cladding Tube	
	$\frac{\pi}{4}\{(1.095)^2 - (0.851)^2\}(7.9)$	= 2.95 g/cm

Item	Calculation/Comment

7.12

No explicit statement regarding the material of the source rod top and bottom endplugs has been found. However, it is assumed that, since the cladding tube of the source rods is stainless steel 304 and since the top and bottom endplugs of the burnable poison rods are also SS-304, the top and bottom endplugs of the source rods are SS-304, as well.

8.2.1 thru 8.2.5 **Top Reflector Component Volume Fractions**

		Area	Volume Fraction
Total area per assembly			
$(8.466)^2(2.54)^2$	=	462.41 cm^2	1.0000
Adapter plate (assumed 57% stainless steel by volume to match the bottom nozzle)			
0.57 (462.41)	=	263.57 cm^2	0.57
Grid sleeves			
$20 \left\{\frac{\pi}{4} [(1.461)^2 - (1.384)^2] (2.54)^2\right\}$	=	3.41 cm^2	0.0074
Grid assembly without grid sleeves			
834.5 g / 3.81 cm / 8.22 g/cm^3	=	26.67 cm^2	0.0577
Guide tubes			
$21 \left\{\frac{\pi}{4} [(1.384)^2 - (1.308)^2]\right\}$	=	3.39 cm^2	0.0073
RCC clad			
$20 \left\{\frac{\pi}{4} [(1.130)^2 - (0.882)^2]\right\}$	=	7.84 cm^2	0.0170
RCC absorber (assuming 1 mil radial gap)			
$20 \left\{\frac{\pi}{4} (0.877)^2\right\}$	=	12.08 cm^2	0.0261
RCC plenum			
$20 \left\{\frac{\pi}{4} (0.882)^2\right\}$	=	12.22 cm^2	0.0264
RCC bottom endplug			
20 {15.2 g / 3.01 cm / 7.9 g/cm^3}	=	12.76 cm^2	0.0276

Item	Calculation/Comment			
8.2.1 thru 8.2.5 (cont.)	Top Reflector Component Volume Fractions			
	RCC top endplug			
	$20 \left\{\frac{\pi}{4} (1.130)^2\right\}$	=	17.75 cm^2	0.0384
	Fuel rod clad			
	$204 \left\{\frac{\pi}{4} [(1.072)^2 - (0.948)^2]\right\}$	=	40.13 cm^2	0.0868
	Fuel rod plenum spring			
	204 {23 g / 18.4 cm / 7.9 g/cm^3}	=	32.28 cm^2	0.0698
	Fuel rod plenum			
	$204 \left\{\frac{\pi}{4} (0.948)^2\right\}$ - plenum spring volume	=	111.71 cm^2	0.2416
	Fuel rod endplug			
	204 {8.09 g / 1.75 cm / 6.55 g/cm^3}	=	143.98 cm^2	0.3114
	Thimble plug neck region			
	$20 \left\{\frac{\pi}{4} (0.56)^2\right\}$	=	4.93 cm^2	0.0107
	Thimble plug body region			
	$20 \left\{\frac{\pi}{4} (1.265)^2\right\}$	=	25.14 cm^2	0.0544
	Burnable poison endplug neck region			
	Same as thimble plug	=	4.93 cm^2 (for 20)	0.0107
	Burnable poison endplug body region			
	Same as thimble plug	=	25.14 cm^2 (for 20)	0.0544
	Burnable poison rod clad			
	$20 \left\{\frac{\pi}{4} [(1.116)^2 - (1.017)^2]\right\}$	=	3.32 cm^2 (for 20)	0.0072
	Burnable poison rod upper plenum			
	$20 \left\{\frac{\pi}{4} (1.017)^2\right\}$	=	16.25 cm^2 (for 20)	0.0351
	Burnable poison absorber			
	$20 \left\{\frac{\pi}{4} [(1.006)^2 - (0.617)^2]\right\}$	=	9.92 cm^2 (for 20)	0.0214

Item	Calculation/Comment			
8.2.1 thru 8.2.5 (cont.)	Top Reflector Component Volume Fractions			
	Burnable poison spacer tube			
	$20 \left\{\frac{\pi}{4} [(0.601)^2 - (0.568)^2]\right\}$	=	0.61 cm^2 (for 20)	0.0013
	Burnable poison inner plenum			
	$20 \left\{\frac{\pi}{4} (0.568)^2\right\}$	=	5.07 cm^2 (for 20)	0.0110

Item	Zone	Constituent	Water	Stainless Steel	Carbon Steel	Zircalloy	Inconel	RCC Absorber	B/P Absorber	Plenum
8.2.1	A			(est.)						
		adapter plate		.5700						
		grid sleeves		.0074						
		RCC clad		.0170						
		RCC absorber						.0261		
		water (difference)	.3795	.5944	0	0	0	.0261	0	0
	B	guide tubes				.0073				
		grid sleeves		.0074						
		RCC clad		.0170						
		RCC absorber						.0261		
		water (difference)	.9422	.0244	0	.0073	0	.0261	0	0
	C	guide tubes				.0073				
		grid sleeves		.0074						
		RCC clad		.0170						
		RCC absorber						.0261		
		fuel rod endplug				.3114				
		water (difference)	.6308	.0244	0	.3187	0	.0261	0	0
	D	guide tubes				.0073				
		grid sleeves		.0074						
		RCC clad		.0170						
		RCC absorber						.0261		
		fuel clad				.0868				
		fuel plenum			.0698					.2416
		water (difference)	.5440	.0244	.0698	.0941	0	.0261	0	.2416
	E	guide tubes				.0073				
		grid sleeves		.0074						
		RCC clad		.0170						
		RCC absorber						.0261		
		fuel clad				.0868				
		fuel plenum			.0698					.2416
		grid structure					.0577			
		water (difference)	.4863	.0244	.0698	.0941	.0577	.0261	0	.2416

Item	Zone	Constituent	Water	Stainless Steel	Carbon Steel	Zircalloy	Inconel	RCC Absorber	B/P Absorber	Plenum
8.2.1	F	guide tubes				.0073				
		RCC clad		.0170						
		RCC absorber						.0261		
		fuel clad				.0868				
		fuel plenum			.0698					.2416
		water (difference)	.5514	.0170	.0698	.0941	0	.0261	0	.2416
	G	guide tubes				.0073				
		RCC endplug		.0276						
		fuel clad				.0868				
		fuel plenum			.0698					.2416
		water (difference)	.5669	.0276	.0698	.0941	0	0	0	.2416
	H	guide tubes				.0073				
		fuel clad				.0868				
		fuel plenum			.0698					.2416
		water (difference)	.5957	0	.0698	.0941	0	0	0	.2416
8.2.2	A	same as 8.2.1 (A)								
	B	same as 8.2.1 (B)								
	C	same as 8.2.1 (c)								
	D	same as 8.2.1 (D)								
	E	same as 8.2.1 (E)								
	F	same as 8.2.1 (F)								

Item	Zone	Constituent	Water	Stainless Steel	Carbon Steel	Zircalloy	Inconel	RCC Absorber	B/P Absorber	Plenum
8.2.3	A	adapter plate		(est.) .5700						
		grid sleeves		.0074						
		RCC top endplug		.0384						
		water (difference)	.3842	.6158	0	0	0	0	0	0
	B	guide tubes				.0073				
		grid sleeves		.0074						
		RCC top endplug		.0384						
		water (difference)	.9469	.0458	0	.0073	0	0	0	0
	C	guide tubes				.0073				
		grid sleeves		.0074						
		RCC top endplug		.0384						
		fuel top endplug				.3114				
		water (difference)	.6355	.0458	0	.3187	0	0	0	0
	D	guide tubes				0073				
		grid sleeves		.0074						
		RCC top endplug		.0384						
		fuel clad				.0868				
		fuel plenum			.0698					.2416
		water (difference)	.5487	.0458	.0698	.0941	0	0	0	.2416
	E	guide tubes				.0073				
		grid sleeves		.0074						
		RCC top endplugs		.0384						
		fuel clad				..0868				
		fuel plenum			.0698					.2416
		grid structure					.0577			
		water (difference)	.4910	.0458	.0698	.0941	.0577	0	0	.2416

Item	Zone	Constituent	Water	Stainless Steel	Carbon Steel	Zircalloy	Inconel	RCC Absorber	B/P Absorber	Plenum
8.2.3	F	guide tubes				.0073				
		RCC top endplugs		.0384						
		fuel clad				.0868				
		fuel plenum			.0698					.2416
		water (difference)	.5561	.0384	.0698	.0941	0	0	0	.2416
	G	guide tubes				.0073				
		RCC clad		.0170						
		RCC plenum								.0264
		fuel clad				.0868				
		fuel plenum			.0698					.2416
		water (difference)	.5511	.0170	.0698	.0941	0	0	0	.2680
	H	same as 8.2.1 (F)								
8.2.4	A			(est.)						
		adapter plate		.5700						
		grid sleeves		.0074						
		thimble plug neck		.0107						
		water (difference)	.4119	.5881	0	0	0	0	0	0
	B	guide tubes				.0073				
		grid sleeves		.0074						
		thimble plug neck		.0107						
		water (difference)	.9746	.0181	0	.0073	0	0	0	0
	C	guide tubes				.3073				
		grid sleeves		.0074						
		thimble plug neck		.0107						
		fuel top endplug				.3114				
		water (difference)	.6632	.0181	0	.3187	0	0	0	0

Item	Zone	Constituent	Water	Stainless Steel	Carbon Steel	Zircalloy	Inconel	RCC Absorber	B/P Absorber	Plenum
8.2.4	D	guide tubes				.0073				
		grid sleeves		.0074						
		thimble plug body		.0544						
		fuel top endplug				.3114				
		water (difference)	.6195	.0618	0	.3187	0	0	0	0
	E	guide tubes				.0073				
		grid sleeves		.0074						
		thimble plug body		.0544						
		fuel clad				.0868				
		fuel plenum			.0698					.2416
		water (difference)	.5327	.0618	.0698	.0941	0	0	0	.2416
	F	guide tubes				.0073				
		grid sleeves		.0074						
		thimble plug body		.0544						
		fuel clad				.0868				
		fuel plenum			.0698					.2416
		grid structure					.0577			
		water (difference)	.4750	.0618	.0698	.0941	.0577	0	0	.2416
	G	guide tubes				.0073				
		thimble plug body		.0544						
		fuel clad				.0868				
		fuel plenum			.0698					.2416
		water (difference)	.5401	.0544	.0698	.0941	0	0	0	.2416
	H	guide tubes				.0073				
		fuel clad				.0868				
		fuel plenum			.0698					.2416
		water (difference)	.5945	0	.0698	.0941	0	0	0	.2416

Item	Zone	Constituent	Water	Stainless Steel	Carbon Steel	Zircalloy	Inconel	RCC Absorber	B/P Absorber	Plenum
8.2.5.1 (20)	A			(est.)						
		adapter plate		.5700						
		grid sleeves		.0074						
		thimble plug and B/P rod necks		} .0107						
		water (difference)	.4219	.5881	0	0	0	0	0	0
	B	guide tubes				.0073				
		grid sleeves		.0074						
		thimble plug and B/P rod necks		} .0107						
		water (difference)	.9746	.0181	0	.0073	0	0	0	0
	C	guide tubes				.0073				
		grid sleeves		.0074						
		thimble plug and B/P rod necks		} .0107						
		fuel top endplug				.3114				
		water (difference)	.6632	.0181	0	.3187	0	0	0	0
	D	guide tubes				.0073				
		grid sleeves		.0074						
		thimble plug and B/P endplug body		} .0544						
		fuel top endplug				.3114				
		water (difference)	.6195	.0618	0	.3187	0	0	0	0
	E	guide tubes				.0073				
		grid sleeves		.0074						
		thimble plug and B/P endplug body		} .0107						
		fuel clad				.0868				
		fuel plenum			.0698					.2416
		water (difference)	.5764	.0181	.0698	.0941	0	0	0	.2416

Item	Zone	Constituent	Water	Stainless Steel	Carbon Steel	Zircalloy	Inconel	RCC Absorber	B/P Absorber	Plenum
8.2.5.1 (20)	F	guide tubes				.0073				
		grid sleeves		.0074						
		thimble plug body								
		B/P rod clad		.0072						
		B/P rod plenum								.0351
		fuel clad				.0868				
		fuel plenum			.0698					.2416
		water (difference)	.5448	.0146	.0698	.0941	0	0	0	.2767
	G	guide tubes				.0073				
		grid sleeves		.0074						
		thimble plug body								
		B/P rod clad		.0072						
		B/P rod plenum								.0351
		fuel rod clad				.0868				
		fuel rod plenum			.0698					.2416
		grid structure					.0577			
		water (difference)	.4871	.0146	.0698	.0941	.0577	0	0	.2767
	H	guide tubes				.0073				
		thimble plug body								
		B/P rod clad		.0072						
		B/P rod plenum								.0351
		fuel rod clad				.0868				
		fuel rod plenum			.0698					.2416
		water (difference)	.5522	.0072	.0698	.0941	0	0	0	.2767
	I	guide tubes				.0073				
		B/P rod clad		.0072						
		B/P rod plenum								.0351
		fuel rod clad				.0868				
		fuel rod plenum			.0698					.2416
		water (difference)	.5522	.0072	.0698	.0941	0	0	0	.2767

Item	Zone	Constituent	Water	Stainless Steel	Carbon Steel	Zircalloy	Inconel	NCC Absorber	B/P Absorber	Plenum
8.2.5.1 (20)	J	guide tubes				.0073				
		B/P rod clad		.0072						
		B/P absorber							.0214	
		B/P spacer tube		.0013						
		B/P inner plenum								.0110
		fuel rod clad				.0868				
		fuel rod plenum			.0698					.2416
		water (difference)	.5538	.0085	.0698	.0941	0	0	.0214	.2526
8.2.5.2 (16)	A ↓ E	same as 8.2.5.1 A-E								
	F	guide tubes				.0073				
		grid sleeves		.0074						
		thimble plug body		.0109						
		B/P rod clad		.0077						
		B/P rod plenum								.0281
		fuel rod clad				.0868				
		fuel rod plenum			.0698					.2416
		water (difference)	.5404	.0260	.0698	.0941	0	0	0	.2697
	G	guide tubes				.0073				
		grid sleeves		.0074						
		thimble plug body		.0109						
		B/P rod clad		.0077						
		B/P rod plenum								.0281
		fuel rod clad				.0868				
		fuel rod plenum			.0698					.2416
		grid structure					.0577			
		water (difference)	.4827	.0260	.0698	.0941	.0577	0	0	.2697

Item	Zone	Constituent	Water	Stainless Steel	Carbon Steel	Zircalloy	Inconel	RCC Absorber	B/P Absorber	Plenum
8.2.5.2 (16)	H	guide tubes				.0073				
		thimble plug body		.0109						
		B/P rod clad		.0077						
		B/P rod plenum								.0281
		fuel rod clad				.0868				
		fuel rod plenum			.0698					.2416
		water (difference)	.5478	.0186	.0698	.0941	0	0	0	.2697
	I	guide tubes				.0073				
		B/P rod clad		.0077						
		B/P rod plenum								.0281
		fuel rod clad				.0868				
		fuel rod plenum			.0698					.2416
		water (difference)	.5587	.0077	.0698	.0941	0	0	0	.2697
	J	guide tubes				.0073				
		B/P rod clad		.0077						
		B/P absorber							.0171	
		B/P spacer tube		.0010						
		B/P inner plenum								.0098
		fuel rod clad				.0868				
		fuel rod plenum			.0698					.2416
		water (difference)	.5599	.0087	.0698	.0941	0	0	.0171	.2504
8.2.5.3 (12)	A ↓ E	same as 8.2.5.1 A-E								
	F	guide tubes				.0073				
		grid sleeves		.0074						
		thimble plug body		.0218						
		B/P rod clad		.0043						
		B/P rod plenum								.0211
		fuel rod clad				.0868				
		fuel rod plenum			.0698					.2416
		water (difference)	.5399	.0335	.0698	.0941	0	0	0	.2627

Item	Zone	Constituent	Water	Stainless Steel	Carbon Steel	Zircalloy	Inconel	RCC Absorber	B/P Absorber	Plenum
8.2.5.3 (12)	G	guide tubes				.0073				
		grid sleeves		.0074						
		thimble plug body		.0218						
		B/P rod clad		.0043						
		B/P rod plenum								.0211
		fuel rod clad				.0868				
		fuel rod plenum			.0698					.2416
		grid structure					.0577			
		water (difference)	.4822	.0335	.0698	.0941	.0577	0	0	.2627
	H	guide tubes				.0073				
		thimble plug body		.0218						
		B/P rod clad		.0043						
		B/P rod plenum								.0211
		fuel rod clad				.0868				
		fuel rod plenum			.0698					.2416
		water (difference)	.5473	.0261	.0698	.0941	0	0	0	.2627
	I	guide tubes				.0073				
		B/P rod clad		.0043						
		B/P rod plenum								.0211
		fuel rod clad				.0868				
		fuel rod plenum			.0698					.2416
		water (difference)	.5691	.0043	.0698	.0941	0	0	0	.2627
	J	guide tubes				.0073				
		B/P rod clad		.0043						
		B/P absorber							.0128	
		B/P spacer tube		.0008						
		B/P inner plenum								.0066
		fuel rod clad				.0868				
		fuel rod plenum			.0698					.2416
		water (difference)	.5700	.0051	.0698	.0941	0	0	.0128	.2482

Item	Zone	Constituent	Water	Stainless Steel	Carbon Steel	Zircalloy	Inconel	RCC Absorber	B/P Absorber	Plenum
8.2.5.4 (9)	A + E	same as 8.2.5.1 A-E								
	F	guide tubes				.0073				
		grid sleeves		.0074						
		thimble plug body		.0299						
		B/P rod clad		.0032						
		B/P rod plenum								.0158
		fuel rod clad				.0868				
		fuel rod plenum			.0698					.2416
		water (difference)	.5382	.0405	.0698	.0941	0	0	0	.2574
	G	guide tubes				.0073				
		grid sleeves		.0074						
		thimble plug body		.0299						
		B/P rod clad		.0032						
		B/P rod plenum								.0158
		fuel rod clad				.0868				
		fuel rod plenum			.0698					.2416
		grid structure					.0577			
		water (difference)	.4805	.0405	.0698	.0941	.0577	0	0	.2574
	H	guide tubes				.0073				
		thimble plug body		.0299						
		B/P rod clad		.0032						
		B/P rod plenum								.0158
		fuel rod clad				.0868				
		fuel rod plenum			.0698					.2416
		water (difference)	.5456	.0331	.0698	.0941	0	0	0	.2574
	I	guide tubes				.0073				
		B/P rod clad		.0032						
		B/P rod plenum								.0158
		fuel rod clad				.0868				
		fuel rod plenum			.0698					.2416
		water (difference)	.5755	.0032	.0698	.0941	0	0	0	.2574

Item	Zone	Constituent	Water	Stainless Steel	Carbon Steel	Zircalloy	Inconel	RCC Absorber	B/P Absorber	Plenum
8.2.5.4 (9)	J	guide tubes				.0073				
		B/P rod clad		.0032						
		B/P absorber							.0096	
		B/P spacer tube		.0006						
		B/P inner plenum								.0050
		fuel rod clad				.0868				
		fuel rod plenum			.0698					.2416
		water (difference)	.5761	.0038	.0698	.0941	0	0	.0096	.2466
8.2.5.5 (8)	A + E	same as 8.2.5.1 A-E								
	F	guide tubes				.0073				
		grid sleeves		.0074						
		thimble plug body		.0326						
		B/P rod clad		.0029						
		B/P 1 plenum								.0140
		fuel rod clad				.0868				
		fuel rod plenum			.0698					.2416
		water (difference)	.5376	.0429	.0698	.0941	0	0	0	.2556
	G	guide tubes				.0073				
		grid sleeves		.0074						
		thimble plug body		.0326						
		B/P rod clad		.0029						
		B/P rod plenum								.0140
		fuel rod clad				.0868				
		fuel rod plenum			.0698					.2416
		grid structure					.0577			
		water (difference)	.4799	.0429	.0698	.0941	.0577	0	0	.2556

Item	Zone	Constituent	Water	Stainless Steel	Carbon Steel	Zircalloy	Inconel	RCC Absorber	B/P Absorber	Plenum
8.2.5.5 (8)	H	guide tubes				.0073				
		thimble plug body		.0326						
		B/P rod clad		.0029						
		B/P rod plenum								.0140
		fuel rod clad				.0868				
		fuel rod plenum			.0698					.2416
		water (difference)	.5450	.0355	.0698	.0941	0	0	0	.2556
	I	guide tubes				.0073				
		B/P rod clad		.0029						
		B/P rod plenum								.0140
		fuel rod clad				.0868				
		fuel rod plenum			.0698					.2416
		water (difference)	.5776	.0029	.0698	.0941	0	0	0	.2556
	J	guide tubes				.0073				
		B/P rod clad		.0029						
		B/P absorber							.0086	
		B/P spacer tube		.0005						
		B/P inner plenum								.0044
		fuel rod clad				.0868				
		fuel rod plenum			.0698					.2416
		water (difference)	.5781	.0034	.0698	.0941	0	0	.0086	.2460

Item	Calculation/Comment
8.2.6	Information regarding the top endplug and upper plenum region of the primary source rods is not available in sufficient detail to permit calculation of volume fractions for upper reflector region of primary source bearing fuel assemblies. In general, the primary source bearing assembly inserts are similar to the 20 rod burnable poison assembly inserts; hence, values for item 8.2.5.1 can probably be substituted for item 8.2.6.
8.2.7	As in item 8.2.6 information is not available in sufficient detail for explicit calculations of top reflector region volume fractions in secondary source bearing fuel assemblies. The secondary source bearing assembly inserts are similar in general configuration to the 16 rod burnable poison assembly inserts and can probably be represented by values calculated for item 8.2.5.2.

9.2.1 thru 9.2.6	Bottom Reflector Component Volume Fractions	Area	Volume Fraction
	Total area per assembly		
	$(8.466 \times 2.54)^2$	$= 462.41\ cm^2$	1.0
	Bottom section of bottom nozzle		
	$2\left\{(1.625\times2.54)^2 - \frac{(0.625\times2.54)^2}{2} - 2(1.625\times0.22\times\frac{0.46}{0.75})(\frac{2.54}{2})^2\right\}$		
	$+2\left\{(1.625\times2.54)^2 - (0.469\times2.54)^2\pi - 2(1.625\times0.22\times\frac{0.46}{0.75})(\frac{2.54}{2})^2\right\}$		
		$= 51.04\ cm^2$	0.1104
	Middle section of bottom nozzle		
	$4\{(8.426-0.313)(0.313)(2.54)^2\}$	$= 65.53\ cm^2$	0.1417
	Top section of bottom nozzle		
	$(8.426\times2.54)^2 - 112(0.25\times2.54)^2\pi$		
	$- 40(0.125\times2.54)^2\pi - 5(0.187\times2.54)^2\pi$		
	$- 4(8.426 \times \frac{0.22}{2} \times \frac{0.46}{0.84})(2.54)^2$	$= 268.86\ cm^2$	0.6204

Item	Calculation/Comment			
9.2.1 thru 9.2.6 cont.	Bottom Reflector Component Volume Fractions			
	Guide tube lower endplugs			
	$20 \left\{\frac{\pi}{4} [(1.384)^2 - (0.64)^2]\right\}$	=	23.65 cm^2	0.0512
	Allowance for thimble screws and bottom of grid sleeve (estimated)	=		0.0100
	Fuel pellets			
	$204 \left\{\frac{\pi}{4} (0.9294)^2 (0.9883)\right\}$	=	136.78 cm^2	0.2958
	Fuel rod gap and pellet end dish			
	$204 \left\{\frac{\pi}{4} (0.9486)^2\right\} - 136.78$	=	7.39 cm^2	0.0160

9.2.7

The secondary source bearing assembly insert is identical to the burnable poison assembly insert with 12 B/P rods in the lower reflector region.

Item	Zone	Constituents	Water	Stainless Steel	Zircalloy	Inconel	RCC Absorber	B/P Absorber	Uranium Dioxide	Plenum
9.2.1 9.2.2 9.2.4	Z	lower core plate		.6204						
		water (difference)	.3796	.6204	0	0	0	0	0	0
	Y	bottom section of bottom nozzle		.1104						
		water (difference)	.8896	.1104	0	0	0	0	0	0
	X	middle section of bottom nozzle		.1417						
		water (difference)	.8583	.1417	0	0	0	0	0	0
	W	top section of bottom nozzle		.6204						
		water (difference)	.3796	.6204	0	0	0	0	0	0
	V	guide tube endplug			.0512					
		thimble screws		.0100						
		grid sleeves		.0074						
		water (difference)	.9314	.0174	.0512	0	0	0	0	0
	U	guide tube endplugs			.0512					
		grid sleeves		.0074						
		fuel rod endplugs			.3114					
		water (difference)	.6300	.0074	.3626	0	0	0	0	0
	T	guide tubes			.0073					
		grid sleeves		.0074						
		fuel rod endplugs			.3114					
		water (difference)	.6739	.0074	.3187	0	0	0	0	0
	S	guide tubes			.0073					
		grid sleeves		.0074						
		fuel rod clad			.0868					
		fuel pellets							.2958	.0160
		water (difference)	.5867	.0074	.0941	0	0	0	.2958	.0160

Item	Zone	Constituents	Water	Stainless Steel	Zircalloy	Inconel	RCC Absorber	B/P Absorber	Uranium Dioxide	Plenum
9.2.1	R	guide tubes			.0073					
9.2.2		grid sleeves		.0074						
9.2.4		fuel rod clad			.0868					
		fuel pellets							.2958	.0160
		grid structure				.0577				
		water (difference)	.5290	.0074	.0941	.0577	0	0	.2958	.0160
9.2.3	Z + R	same as 9.2.1 Z+R								
	Q	guide tubes			.0073					
		grid sleeves		.0074						
		fuel rod clad			.0868					
		fuel pellets							.2958	.0160
		RCC endplugs		.0276						
		grid structure				.0577				
		water (difference)	.5014	.0350	.0941	.0577	0	0	.2958	.0160
	P	guide tubes			.0073					
		fuel rod clad			.0868					
		fuel pellets							.2958	.0160
		RCC endplugs		.0276						
		water (difference)	.5665	.0276	.0941	0	0	0	.2958	.0160
9.2.5.1 (20)	Z + R	same as 9.2.1 Z+R								
	Q	guide tubes			.0073					
		grid sleeves		.0074						
		fuel rod clad			.0868					
		fuel pellets							.2958	.0160
		B/P rod endplugs		.0276						
		grid structures				.0577				
		water (difference)	.5014	.0350	.0941	.0577	0	0	.2958	.0160

Item	Zone	Constituents	Water	Stainless Steel	Zircalloy	Inconel	RCC Absorber	B/P Absorber	Uranium Dioxide	Plenum
9.2.5.1 (20)	P	guide tubes			.0073					
		fuel rod clad			.0868					
		fuel pellets							.2958	.0160
		B/P rod endplugs		.0276						
		water (difference)	.5665	.0276	.0941	0	0	0	.2958	.0160
9.2.5.2 (16)	Z + R	same as 9.2.1 Z+R								
	Q	guide tubes			.0073					
		grid sleeves		.0074						
		fuel rod clad			.0868					
		fuel pellets							.2958	.0160
		B/P rod endplugs		.0221						
		grid structure				.0577				
		water (difference)	.5069	.0295	.0941	.0577	0	0	.2958	.0160
	P	guide tubes			.0073					
		fuel rod clad			.0868					
		fuel pellets							.2958	.0160
		B/P rod endplugs		.0221						
		water (difference)	.5720	.0221	.0941	0	0	0	.2958	.0160
9.2.5.3 (12)	Z + R	same as 9.2.1 Z+R								
9.2.7										
	Q	guide tubes			.0073					
		grid sleeves		.0074						
		fuel rod clad			.0868					
		fuel pellets							.2958	.0160
		B/P rod endplugs		.0166						
		grid structure				.0577				
		water (difference)	.5124	.0240	.0941	.0577	0	0	.2958	.0160

Item	Zone	Constituents	Water	Stainless Steel	Zircalloy	Inconel	RCC Absorber	B/P Absorber	Uranium Dioxide	Plenum
9.2.5.3 (12)	P	guide tubes			.0073					
		fuel rod clad			.0868					
		fuel pellets							.2958	.0160
9.2.7		B/P rod endplugs		.0166						
		water (difference)	.5775	.0166	.0941	0	0	0	.2958	.0160
9.2.5.4 (9)	Z ↓ R	same as 9.2.1 Z→R								
	Q	guide tubes			.0073					
		grid sleeves		.0074						
		fuel rod clad			.0868					
		fuel pellets							.2958	.0160
		B/P rod endplugs		.0124						
		grid structure				.0577				
		water (difference)	.5166	.0198	.0941	.0577	0	0	.2958	.0160
	P	guide tubes			.0073					
		fuel rod clad			.0868					
		fuel pellets							.2958	.0160
		B/P rod endplugs		.0124						
		water (difference)	.5817	.0124	.0941	0	0	0	.2958	.0160
9.2.5.5 (8)	Z ↓ R	same as 9.2.1 Z→R								
	Q	guide tubes			.0073					
		grid sleeves		.0074						
		fuel rod clad			.0868					
		fuel pellets							.2958	.0160
		B/P rod endplugs		.0110						
		grid structure				.0577				
		water (difference)	.5180	.0184	.0941	.0577	0	0	.2958	.0160

Item	Zone	Constituents	Water	Stainless Steel	Zircalloy	Inconel	RCC Absorber	B/P Absorber	Uranium Dioxide	Plenum
9.2.5.5 (B)	P	guide tubes			.0073					
		fuel rod clad			.0868					
		fuel pellets							.2958	.0160
		B/P rod endplugs		.0110						
		water (difference)	.5831	.0110	.0941	0	0	0	.2958	.0160
9.2.6	Z ↓ R	same as 9.2.1 Z→R								
	O	guide tubes			.0073					
		grid sleeves		.0074						
		fuel rod clad			.0868					
		fuel pellets							.2958	.0160
		B/P rod endplugs		.0262						
		grid structure				.0577				
		water (difference)	.5028	.0336	.0941	.0577	0	0	.2958	.0160
	P	guide tubes			.0073					
		fuel rod clad			.0868					
		fuel rod pellets							.2958	.0160
		B/P rod endplugs		.0262						
		water (difference)	.5679	.0262	.0941	0	0	0	.2958	.0160

LIST OF MATERIAL SHEETS

Sheet Number	Material
1	Stainless Steel 304
2	Carbon Steel
3	Inconel-718
4	Zircaloy-4
5	Silver-Indium-Cadmium Alloy
6	Borosilicate Glass
7	Uranium Dioxide
8	Aluminum Oxide
9	Antimony-Beryllium Compact

MATERIAL SHEET NUMBER 1

Material: Stainless Steel SS-304

Density: 7.9 gr/cc

Makeup:

Constituent	Weight Fraction
Carbon	<0.0008
Manganese	<0.0200
Silicon	<0.0100
Chromium	0.18 to 0.20
Nickel	0.08 to 0.11
Iron	(Remainder)

Sources:

Nuclear Engineering Handbook Section 10-4.1 Table 52
H. Etherington, Editor
McGraw-Hill Book Company, Inc. (1958)

MATERIAL SHEET NUMBER 2

Material: Carbon Steel

Density: 7.86 gr/cc

Makeup:

Constituent	Weight Fraction
Carbon	.0055 - .0075
Manganese	.0060 - .0090
Silicon	.0010 - .0030
Iron	(Remainder)

Source:

Metals Handbook 8th Edition
T. Lyman, Editor
American Society for Metals (1961)

MATERIAL SHEET NUMBER 3

Material: Inconel 718

Density: 8.22 gm/cc

Makeup:

Constituent	Weight Fraction
Nickel (plus Cobolt)	0.50 to 0.55
Cobolt	<0.01
Chromium	0.17 to 0.21
Niobium and Tantalum	0.0475 to 0.0550
Molybdenum	0.0280 to 0.0330
Titanium	0.0065 to 0.0115
Aluminum	0.0020 to 0.0080
Carbon	<0.0008
Manganese	<0.0035
Silicon	<0.0035
Phosphorus	<0.00015
Sulfur	<0.00015
Boron	<0.00006
Copper	<0.0030
Iron	(Remainder)

Sources:

Metals Handbook 8th edition
T. Lyman, Editor
American Society for Metals (1961)

MATERIAL SHEET NUMBER 4

Material: Zircaloy-4

Density: 6.55 gm/cc

Makeup:

Constituent	Weight Fraction	
	Reference 1	Reference 2
Tin	0.0160	0.0147
Iron	0.0025	0.0020
Chromium	0.0012	0.0012
Oxygen	1200 ppm	1240 ppm
Carbon	90 ppm	110 ppm
Nitrogen	30 ppm	32 ppm
Hydrogen	25 ppm	5 ppm
Zirconium	(Remainder)	(Remainder)

Sources:

Reference 1 "Characterization of Zircaloy-4 Tubing Procured for Fuel Cladding Research Programs"
ORNL/NUREG/TM-29 (1976)
R. H. Chapman

Reference 2 "Core Meltdown Experimental Review"
SAND-0382 (1975)

MATERIAL SHEET NUMBER 5

Material: Silver-Indium-Cadmium Alloy

Density: 10.17 gm/cc

Makeup:

Constituents	Weight Fraction
Silver	0.80
Indium	0.15
Cadmium	0.05

Sources:

"Development and Properties of Silver Base Alloys as Control Rod Materials for Pressurized Water Reactors"
J. Cohen
Nucleonics, Vol. 16, No. 8, p. 122 (1958)

MATERIAL SHEET NUMBER 6

Material: Borosilicate Glass

Density: 2.28 gm/cc (?)

Information regarding the makeup of the borosilicate glass tubing used as the absorber medium in the barnable poison rods has proved to be difficult to locate in the open literature and inconsistent, when found. The only "hard" fact that has been located is that the natural boron content of the Zion Unit 2 burnable poison rods is (item 6.20 of Table 2.2) 0.0603 g/cm^3. RESAR-3 gives for the boron weight density in the borosilicate glass 2.28 gm/cm^3 which is clearly incorrect since the density of typical borosilicate "Pyrex" glasses is given in Morey (see "Sources") as 2.23 gm/cm^3. If the value of 2.28 gm/cm^3 is taken to be the actual density of the glass, one can back calculate the B_2O_3 weight fraction to be 0.17 (calculation sheet item 6.19) which is somewhat high for normal Pyrex glasses, but quite close to the corresponding value for the "Tempax" glass listed in Morey as a "chemically resistant glass" comparable to Pyrex.

The chemical makeup of "Tempax" glass and of conventional "Pyrex" glass is given by Morey as

	Weight Fractions	
	"Tempax" Glass	"Pyrex" Glass
SiO_2	0.754	0.805
B_2O_3	0.175	0.129
Na_2O	0.036	0.038
K_2O	0.004	0.004
Sb_2O_3	0.016	0
Al_2O_3	0.016	0.022
Σ	1.001	0.998

If the value of 2.28 gr/cm^3 is indeed a valid value for the density of the borosilicate glass absorber in the burnable poison rods the chemical makeup of "Tempax" glass is probably close to the makeup of the glass in the burnable poison rods.

Sources: "The Properties of Glass" 2nd Edition
George W. Morey
Reinhold Publishing Corporation (1954)

MATERIAL SHEET NUMBER 7

Material: Sintered Uranium Oxide

Density: 10.96 gm/cc (theoretical)

Makeup:

Constituent	Weight Fraction
Uranium dioxide (UO_2)	1.00

Source:

Engineering Properties of Selected Ceramic Materials
J. F. Lynch, C. G. Ruderer & W. H. Duckworth, Editors
The American Ceramic Society, Inc.

MATERIAL SHEET NUMBER 8

Material: Aluminum Oxide

Density: 3.98 gm/cc (theoretical)

Makeup:

Constituent	Weight Fraction
Aluminum Oxide (Al_2O_3)	1.00

Source:

Engineering Properties of Selected Ceramic Materials
J. F. Lynch, C. G. Ruderer & W. H. Duckworth, Editors
The American Ceramic Society, Inc.

MATERIAL SHEET NUMBER 9

Material: Antimony Beryllium Compact

Density: Not Available

Makeup:

No information has been located in the open literature regarding the makeup of the antimony-beryllium mixture/alloy used as the secondary source material in Zion Unit 2 beyond the statement that the antimony-beryllium is formed into pellets, which appear to indicate a compacted powder (similar to the UO_2 fuel pellets) rather than an alloy (which might resemble the silver-indium-cadmium alloy used in the RCCA rods). Neither weight nor volume fraction information appears to have been published in the open literature.

Sources:

None Available

REACTOR: ZION UNIT 2
CYCLES: 1 and 2

TABLE 2.3
AVERAGE ASSEMBLY FUEL LOADINGS

Sheet 1 of 5

ITEMS	VALUES	SOURCES	REFERENCES
1.0 CYCLE 1			
1.1 Cycle 1 - Region 1			
1.1.1 Number of Assemblies Loaded	69	Comm. Ed. Nuclear Fuel Data Bank	
1.1.2 Total Weight of Uranium in Region	29,479.632 kg	Comm. Ed. Nuclear Fuel Data Bank	
1.1.3 Enrichment (by weight)	2.248%	Comm. Ed. Nuclear Fuel Data Bank	
1.1.4 Total Uranium Weight per Assembly	453.533 kg	Calculated	Calculation Sheet item 1.1.4
1.1.5 U-234 Weight per Assembly	0.122 kg	Calculated	Calculation Sheet item 1.1.5
1.1.6 U-235 Weight per Assembly	10.196 kg	Calculated	Calculation Sheet item 1.1.6
1.1.7 U-236 Weight per Assembly	0		Calculation Sheet item 1.1.7
1.1.8 U-238 Weight per Assembly	443.213 kg	Calculated	Calculation Sheet item 1.1.8
1.1.9 Uranium Isotopic Weights per Unit Length of Fuel Column	U-234 0.0016g/cm U-235 0.1366g/cm U-236 0.0 U-238 5.940g/cm	Calculated	Calculation Sheet item 1.1.9

REACTOR: ZION UNIT 2
CYCLES: 1 and 2

TABLE 2.3
AVERAGE ASSEMBLY FUEL LOADINGS

Sheet 2 of 5

ITEMS	VALUES	SOURCES	REFERENCES
1.2 Cycle 1 - Region 2			
1.2.1 Number of Assemblies Loaded	64	Comm. Ed. Nuclear Fuel Data Bank	
1.2.2 Total Weight of Uranium in Region	28,570.093 kg	Comm. Ed. Nuclear Fuel Data Bank	
1.2.3 Enrichment (by weight)	2.7887%	Comm. Ed. Nuclear Fuel Data Bank	
1.2.4 Total Uranium Weight per Assembly	446.408 kg	Calculated	Calculation Sheet item 1.2.4
1.2.5 U-234 Weight per Assembly	0.161 kg	Calculated	Calculation Sheet item 1.2.5
1.2.6 U-235 Weight per Assembly	12.449 kg	Calculated	Calculation Sheet item 1.2.6
1.2.7 U-236 Weight per Assembly	0		Calculation Sheet item 1.1.7
1.2.8 U-238 Weight per Assembly	433.798 kg	Calculated	Calculation Sheet item 1.2.8
1.2.9 Uranium Isotopic Weights per Unit Length of Fuel Column	U-234 0.0022g/cm U-235 0.1675g/cm U-236 0.0 U-238 5.838g/cm	Calculated	Calculation Sheet item 1.2.9

REACTOR: ZION UNIT 2
CYCLES: 1 and 2

TABLE 2.3
AVERAGE ASSEMBLY FUEL LOADINGS

Sheet 3 of 5

ITEMS	VALUES	SOURCES	REFERENCES
1.3 Cycle 1 - Region 3			
1.3.1 Number of Assemblies Loaded	64	Comm. Ed. Nuclear Fuel Data Bank	
1.3.2 Total Weight of Uranium in Region	28,882.208 kg	Comm. Ed. Nuclear Fuel Data Bank	
1.3.3 Enrichment (by weight)	3.292%	Comm. Ed. Nuclear Fuel Data Bank	
1.3.4 Total Uranium Weight per Assembly	451.285 kg	Calculated	Calculation Sheet item 1.3.4
1.3.5 U-234 Weight per Assembly	0.205 kg	Calculated	Calculation Sheet item 1.3.5
1.3.6 U-235 Weight per Assembly	14.856 kg	Calculated	Calculation Sheet item 1.3.6
1.3.7 U-236 Weight per Assembly	0		Calculation Sheet item 1.1.7
1.3.8 U-238 Weight per Assembly	436.224 kg	Calculated	Calculation Sheet item 1.3.8
1.3.9 Uranium Isotopic Weights per Unit Length of Fuel Column	U-234 0.0027g/cm U-235 0.2008g/cm U-236 0.0 U-238 5.8955g/cm	Calculated	Calculation Sheet item 1.3.9

REACTOR: ZION UNIT 2
CYCLES: 1 and 2

TABLE 2.3
AVERAGE ASSEMBLY FUEL LOADINGS

Sheet 4 of 5

ITEMS	VALUES	SOURCES	REFERENCES
2.0 CYCLE 2			
2.1 Cycle 2 - Region 1			
2.1.1 Number of Assemblies Retained	6	Comm. Ed. Nuclear Fuel Data Bank	For identification, see Table 2.2 items 1.4.1 and 1.4.2
2.2 Cycle 2 - Region 2			
2.2.1 Number of Assemblies Retained	63	Comm. Ed. Nuclear Fuel Data Bank	For identification, see Table 2.2 items 1.4.1 and 1.4.2
2.3 Cycle 2 - Region 3			
2.3.1 Number of Assemblies Retained	64	Comm. Ed. Nuclear Fuel Data Bank	For identification, see Table 2.2 items 1.4.1 and 1.4.2
2.4 Cycle 2 - Region 4			
2.4.1 Number of Assemblies Loaded	60	Comm. Ed. Nuclear Fuel Data Bank	
2.4.2 Total Weight of Uranium in Region	27,396.0 kg	Comm. Ed. Nuclear Fuel Data Bank	
2.4.3 Enrichment (by weight)	3.063%	Comm. Ed. Nuclear Fuel Data Bank	
2.4.4 Total Uranium Weight per Assembly	456.60 kg	Calculated	Calculation Sheet item 2.4.4

REACTOR: ZION UNIT 2

CYCLES: 1 and 2

TABLE 2.3

AVERAGE ASSEMBLY FUEL LOADINGS

Sheet 5 of 5

ITEMS	VALUES	SOURCES	REFERENCES
2.4.5 U-234 Weight per Assembly	0.188 kg	Calculated	Calculation Sheet item 2.4.5
2.4.6 U-235 Weight per Assembly	13.986 kg	Calculated	Calculation Sheet item 2.4.6
2.4.7 U-236 Weight per Assembly	0		Calculation Sheet item 1.1.7
2.4.8 U-238 Weight per Assembly	442.426 kg	Calculated	Calculation Sheet item 2.4.8
2.4.9 Uranium Isotopic Weights per Unit Length of Fuel Column	U-234 0.0025g/cm U-235 0.1874g/cm U-236 0.0 U-238 5.9294g/cm	Calculated	Calculation Sheet item 2.4.9

CALCULATION SHEETS FOR TABLE 2.3

Item	Calculation/Comment

1.1.4 Total Weight of Uranium per Assembly - Region 1

$$\frac{29{,}479.632 \text{ kg/region}}{65 \text{ assemblies/region}} = 453.533 \text{ kg/assembly}$$

1.1.5 Weight of U-234 per Assembly

In the Table of Isotopes (Sixth edition) by Ledever, Hollander and Perlman, the atom fraction of U-234 in equilibrium with U-238 is given as 0.000057, compared with U-235 at 0.007196.

Converting both of these to weight fractions we have:

U-234	0.000056
U-235	0.007105

If U-234 were to behave exactly like U-235 in the enrichment process we would have (per tonne of uranium):

Region	Enrichment	U-234	U-235	U-238
1	2.248 w/o	0.17 kg	22.48 kg	977.35 kg
2	2.7887 w/o	0.22 kg	27.89 kg	971.89 kg
3	3.292 w/o	0.26 kg	32.92 kg	966.82 kg
4	3.063 w/o	0.24 kg	30.63 kg	969.13 kg

However, if the assumption is made that U-234 and U-235 each transport through the enrichment cascade independently of the other, improved estimates of the U-234 content can be made. The assumption of independent behavior is probably valid in that the U-234 never constitutes more than a trace component in the uranium stream and U-235 amounts to, at most, 3.2%. The notation and methods that follow are derived from Nuclear Chemical Engineering (2nd edition) by Benedict and Pigford.

For gaseous diffusion,

stage separation factor $\alpha^{235} = \sqrt{\frac{238+6\times19}{235+6\times19}} = 1.0043$

heads separation factor $\beta^{235} = 1.00214$

The number of stages, n, required to go from natural uranium at 0.007196 atom fraction U-235 to 0.02276 atom fraction (equivalent to 0.02248 weight fraction) is given by

$$\frac{\frac{0.02276}{0.97724}}{\frac{0.007196}{0.992804}} = (1.00214)^n$$

n = 546 stages

Item	Calculation/Comment

1.1.5 (cont.)

Also,

$$\alpha^{234} = \sqrt{\frac{238+6\times19}{234+6\times19}} = 1.00573$$

$$\epsilon^{234} = 1.00287$$

The enrichment attained by the U-234 in 546 stages is e^{234} (atom fraction) where

$$\frac{\frac{e^{234}}{1-e^{234}}}{\frac{0.000057}{0.999943}} = (1.00287)^{546}$$

e^{234} = 0.000272 atom fraction

→ 0.000268 weight fraction

→ 0.27 kg/tonne enriched uranium

Upon repeating the calculation for the other enrichments we obtain

Region	Enrichment	U-234	U-235	U-238
1	2.248 w/o	0.27 kg	22.48 kg	977.25 kg
2	2.7887 w/o	0.36 kg	27.89 kg	971.75 kg
3	3.292 w/o	0.45 kg	32.92 kg	966.63 kg
4	3.063 w/o	0.41 kg	30.63 kg	968.96 kg

In the absence of any information in the open literature regarding the U-234 content in Zion Unit 2 fuel it is assumed that the latter set of numbers is the more nearly correct. Then, the weight of U-234 per assembly is

$$0.268 \frac{\text{kg}}{\text{tonne}} \times 0.453533 \frac{\text{tonnes}}{\text{assembly}} = 0.122 \text{ kg}$$

1.1.6 **Weight of U-235 per Assembly**

$$22.48 \frac{\text{kg}}{\text{tonne}} \times 0.453533 \frac{\text{tonnes}}{\text{assembly}} = 10.196 \text{ kg}$$

1.1.7 **Weight of U-236 per Assembly**

No natural source of U-236 in enriched fresh uranium has been identified. The Table of Isotopes lists as atom fractions

U-234	0.000057
U-235	0.007196
U-238	0.99276
$\sum$	1.00001

where the slight excess is attributable to experimental error. Apparently U-236 does not exist in detectable quantities in nature. In the absence of information to the contrary in the open literature the U-236 content in the first four regions of Zion Unit 2 fuel is assumed to be 0. Any U-236 actually present is counted as U-238 (see item 1.1.8).

Item	Calculation/Comment		
1.1.8	Weight of U-238 per Assembly		
	453.533 - 0.122 - 10.196	=	443.215 kg
1.1.9	Uranium Isotopic Weights per Unit Length of Fuel Column		
	Total uranium weight per unit length of fuel column		
	$\frac{453{,}533 \text{ grams/assy.}}{204 \text{ rods/assy} \times 365.76 \text{ cm/rod}}$	=	6.0783 g/cm
	U-234 $\frac{0.122 \text{ kg/assy.}}{453.533 \text{ kg/assy.}} \times 6.0783$ g/cm	=	0.0016 g/cm
	U-235 $\frac{10.196}{453.533} \times 6.0783$	=	0.1366 g/cm
	U-236	=	0
	U-238 $\frac{443.215}{453.533} \times 6.0783$	=	5.9401 g/cm
1.2.4	Total Weight of Uranium per Assembly - Region 2		
	$\frac{28{,}570.093}{64}$	=	446.408 kg/assy.
1.2.5	Weight of U-234 per Assembly		

$2.7887\ ^{w}/o = 2.824\ ^{a}/o$

$$\frac{\frac{0.02824}{0.97176}}{\frac{0.007196}{0.992804}} = (1.00214)^n$$

$$4.0094 = (1.00214)^n$$

$$n = 650 \text{ stages}$$

$$\frac{e^{234}}{1-e^{234}} = \frac{0.000057}{0.999943} \times (1.00287)^{650}$$

Item	Calculation/Comment		
1.2.5 (cont.)	Weight of U-234 per Assembly		
	e^{234} = 0.000367 atom fraction		
	e^{234} = 0.000361 weight fraction		
	= 0.36 kg/tonne		
	0.361 x 0.446408	=	0.161 kg/assy.
1.2.6	Weight of U-235 per Assembly		
	27.887 x 0.446408	=	12.449 kg/assy.
1.2.8	Weight of U-238 per Assembly		
	446.408 - 0.161 - 12.449	=	433.798 kg/assy.
1.2.9	Uranium Isotopic Weights per Unit Length of Fuel Column		
	Total uranium weight per unit length of fuel column		
	$\frac{446{,}406 \text{ grams/assy.}}{204 \text{ rods/assy.} \times 364.24 \text{ cm/rod}}$	=	6.0078 g/cm
	U-234 $\frac{0.161 \text{ kg/assy.}}{446.406 \text{ kg/assy.}} \times 6.0078$ g/cm	=	0.0022 g/cm
	U-235 $\frac{12.449}{446.406} \times 6.0078$	=	0.1675 g/cm
	U-236	=	0
	U-238 $\frac{433.798}{446.406} \times 6.0078$	=	5.8381 g/cm
1.3.4	Total Weight of Uranium per Assembly - Region 3		
	$\frac{28{,}882.208}{64}$	=	451.285 kg/assy.

Item	Calculation/Comment

1.3.5 Weight of U-234 per Assembly

3.292 w/o = 3.334 a/o

$$\frac{0.03334}{0.96666} = (1.00214)^n$$

$$\frac{0.007196}{0.992804}$$

$$4.7584 = (1.00214)^n$$

n = 730 stages

$$\frac{e^{234}}{1-e^{234}} = \frac{0.000057}{0.999943} \times (1.00287)^{730}$$

e^{234} = 0.000462 atom fraction

e^{234} = 0.000454 weight fraction

= 0.45 kg/tonne

0.454 x 0.451285 = 0.205 kg/assy.

1.3.6 Weight of U-235 per Assembly

32.92 x 0.451285 = 14.856 kg/assy.

1.3.8 Weight of U-238 per Assembly

451.285 - 0.205 - 14.856 = 436.224 kg/assy.

1.3.9 Uranium Isotopic Weights per Unit Length of Fuel Column

Total uranium weight per unit length of fuel column

$$\frac{451{,}285 \text{ grams/assy.}}{204 \text{ rods/assy.} \times 362.71 \text{ cm/rod}} = 6.0990 \text{ gm/cm}$$

U-234 $\frac{0.205 \text{ kg/assy.}}{451.285 \text{ kg/assy.}} \times 6.0990 \text{ gm/cm}$ = 0.0027 g/cm

U-235 $\frac{14.856}{451.285} \times 6.0990$ = 0.2008 g/cm

U-236 = 0

U-238 $\frac{436.224}{451.285} \times 6.0990$ = 5.8955 g/cm

Item	Calculation/Comment	
2.4.4	Total Weight of Uranium per Assembly - Region 4	
	$\frac{27,396}{60}$	= 456.60 kg/assy.

2.4.5 Weight of U-234 per Assembly

3.063 $^{w}/o$ = 3.102 $^{a}/o$

$$\frac{\frac{0.03102}{0.96898}}{\frac{0.007196}{0.992804}} = (1.00214)^n$$

$$4.4167 = (1.00214)^n$$

n = 695 stages

$$\frac{e^{234}}{1-e^{234}} = \frac{0.000057}{0.999943} \times (1.00287)^{695}$$

e^{234} = 0.000418 atom fraction

= 0.000411 weight fraction

= 0.41 kg/tonne

0.411 x 0.45660 = 0.188 kg/assy.

2.4.6 Weight of U-235 per Assembly

30.63 x 0.45660 = 13.986 kg/assy.

2.4.8 Weight of U-238 per Assembly

456.60 - 0.188 - 13.986 = 442.426 kg/assy.

2.4.9 Uranium Isotopic Weights per Unit Length of Fuel Column

Total uranium weight per unit length of fuel column

$$\frac{456,600 \text{ grams/assy.}}{204 \text{ rods/assy.} \times 365.76 \text{ cm/rod}} = 6.1194 \text{ g/cm}$$

U-234 $\frac{0.188 \text{ kg/assy.}}{456.60 \text{ kg/assy.}} \times 6.1194$ g/cm = 0.0025 g/cm

U-235 $\frac{13.986}{456.60} \times 6.1194$ = 0.1874 g/cm

U-236 = 0

U-238 $\frac{442.426}{456.60} \times 6.1194$ = 5.9294 g/cm

3.0 OPERATING CHARACTERISTICS OF ZION UNIT 2

Various data relevant to the operating characteristics of Zion Unit 2 during Cycle 1 and the first half of Cycle 2 are summarized below under the respective headings of:

- measured core physics parameters at startup of Cycle 1 and Cycle 2 (Section 3.1)
- operating history for Cycle 1 and the first half of Cycle 2 (Section 3.2)
- measured core power distribution parameters during Cycle 1 and the first half of Cycle 2 (Section 3.3)
- measured responses during special maneuvering operations (load follow and axial xenon oscillations) (Section 3.4)

3.1 MEASURED CORE PHYSICS PARAMETERS

3.1.1 Cycle 1 Startup Measurements

A series of measurements are customarily made during the startup of each reactor core in order to characterize the core operational parameters and to verify the results of design calculations. For Cycle 1 of Zion Unit 2 the startup measurements included direct determination of:

- differential worths ($\partial\rho/\partial\eta$) of various banks of control rods,
- critical boron concentrations for a wide range of control rod configurations including endpoints of control bank movement, and
- differential isothermal (combined fuel and moderator) temperature coefficients ($\partial\rho/\partial T$)

under hot, zero power conditions, and

- differential power (combined fuel and moderator) coefficients ($\partial\rho/\partial$ power)

over a range of power levels during power escalation.

On the basis of the results of these direct measurements additional information could be inferred regarding the integral worth of each of the measured banks of control rods and the differential worth of boron concentration in the hot, zero power condition and the doppler-only differential power coefficient at various power levels.

All determinations of change in core reactivity required for the direct differential worth measurements were made using a standard analog reactivity meter. For the zero power measurements the output of a single "long ion chamber" (Power Range Channel N-42) was supplied without isolation as input to the reactivity meter. For the at-power measurements the input signal to the reactivity meter was the electrical sum of the outputs of all four power range channels read from the secondary sides of the respective isolation transformers.

Delayed Precursor Group	Importance-Weighted Yield Fraction ($\beta_{i,eff}$)	Decay Constant (λ_i in seconds^{-1})
1	0.00022	0.0125
2	0.00146	0.0308
3	0.00135	0.1152
4	0.00281	0.3109
5	0.00095	1.2366
6	0.00032	3.3725

TABLE 3.1.1-1 Delayed Neutron Precursor Parameters Programmed in the Analogue Reactivity Computer at Unit 2, Cycle 1 Startup

The results and relevant commentary summarized here are taken directly from the Zion Unit 2 Cycle 1 Startup Test Report prepared by Commonwealth Edison following the startup of Unit 2. In all cases the results are reported to be in good agreement with the results of prior design calculations (not reported here) and are internally consistent, to the extent that consistency can be verified. All reactivity worths are quoted in units of pcm where 1 pcm = 10^{-5} absolute reactivity units (i.e. 1000 pcm = 1% in reactivity). The delayed neutron precursor yield fractions and decay constants programmed into the reactivity computer at the startup of Cycle 1 are listed in Table 3.1.1-1.

3.1.1.1 Differential and Integral Control Rod Bank Worths

The worths of each of the four controlling banks, (CD, CC, CB and CA of Diagram 2.2-5), of the two last withdrawn shutdown banks (SD and SC of Diagram 2.2-5), of the upper half of the next shutdown bank (SB) and of the part length group were obtained from incremental reactivity measurements made with the reactivity computer during reactor coolant system boration and dilution. The control and shutdown bank worths were measured in the normal bank withdrawal or insertion sequence, but without overlap, i.e. the preceeding bank was either fully withdrawn or fully inserted before movement of the next bank in sequence was started. The part length bank measurements were made with all other control rod banks fully withdrawn. Throughout the boration and dilution operations the reactor coolant temperature was controlled as nearly as practical to 547°F. The directly measured differential bank worths and the inferred integral worth variations with bank position are plotted in Diagrams 3.1.1-1 through 3.1.1-8. The inferred integral bank worths for the control and shutdown banks are also summarized in Table 3.1.1-2.

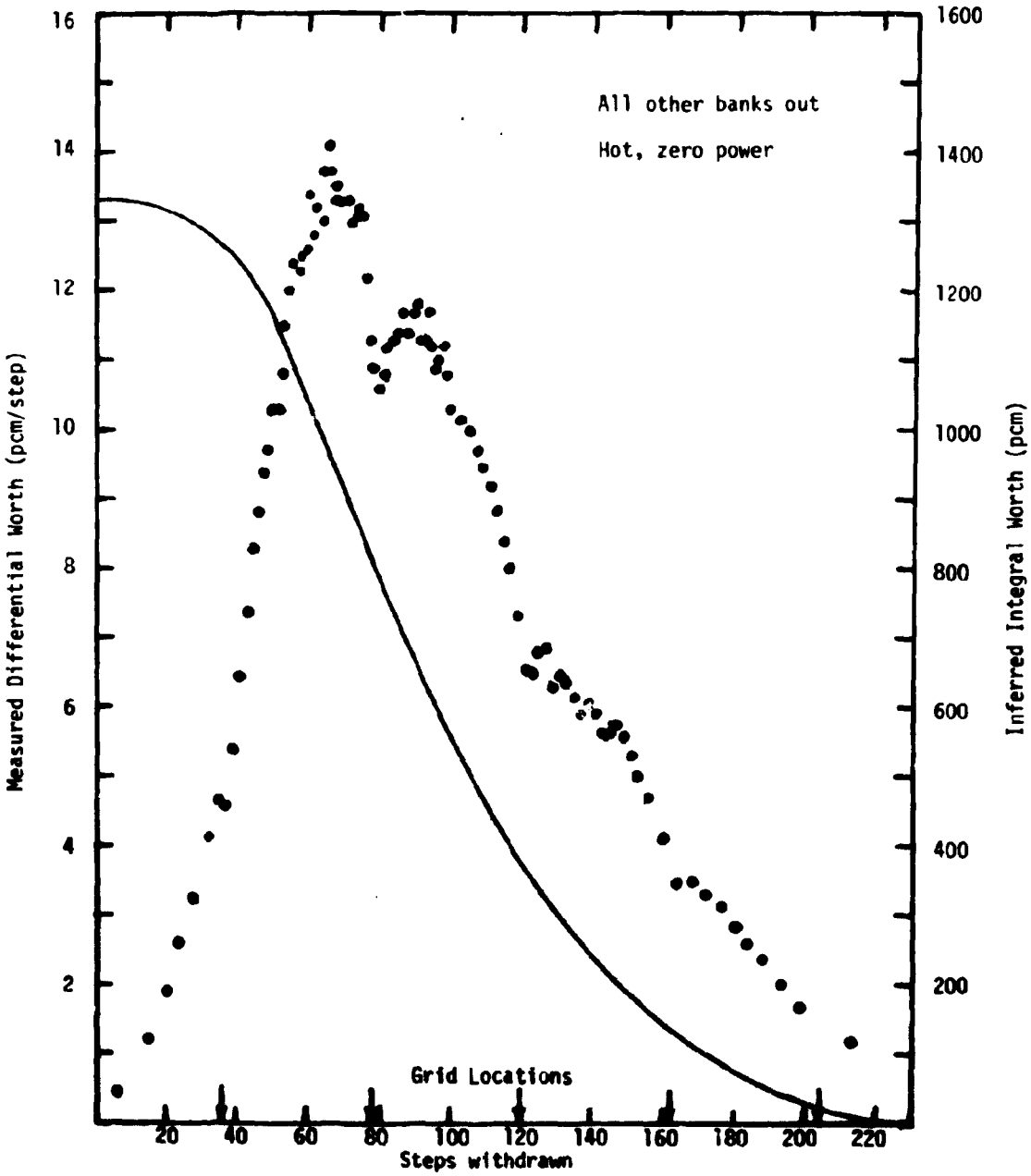

Diagram 3.1.1-1 Differential and Integral Worths of Control Bank D at Startup of Zion Unit 2, Cycle 1

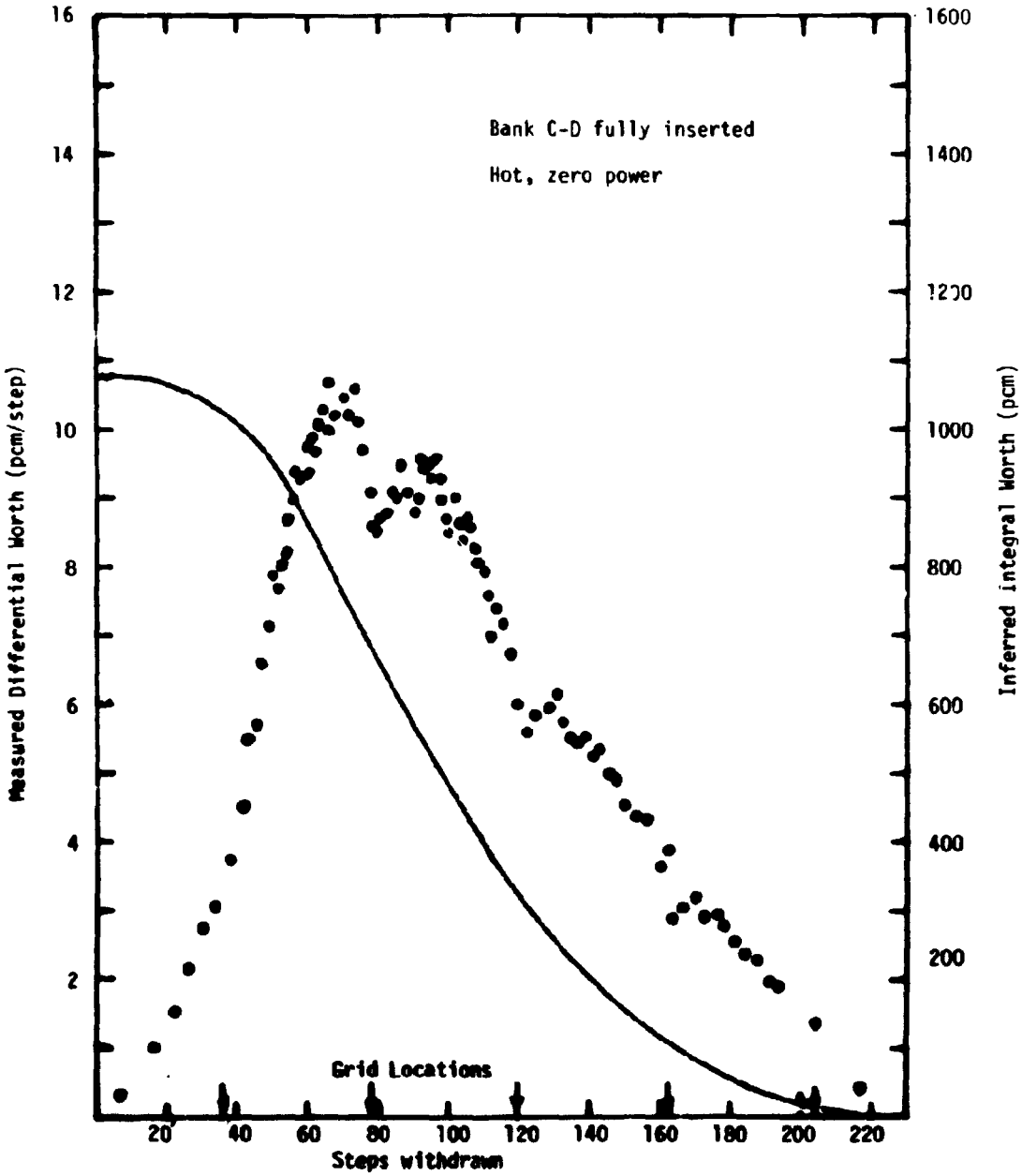

Diagram 3.1.1-2 Differential and Integral Worths of Control Bank C at Startup of Zion Unit 2, Cycle 1

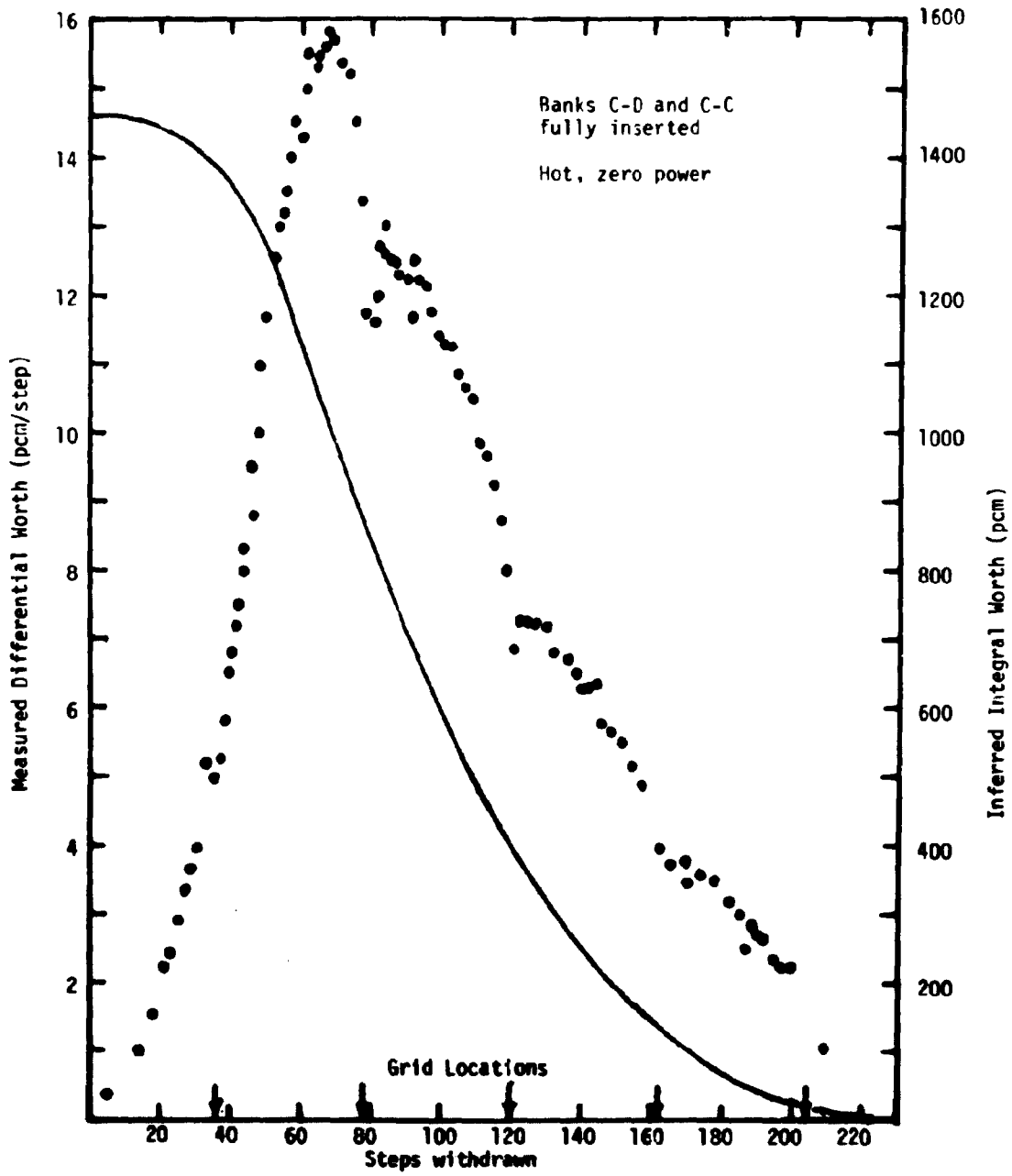

Diagram 3.1.1-3 Differential and Integral Worths of Control Bank B at Startup of Zion Unit 2, Cycle 1

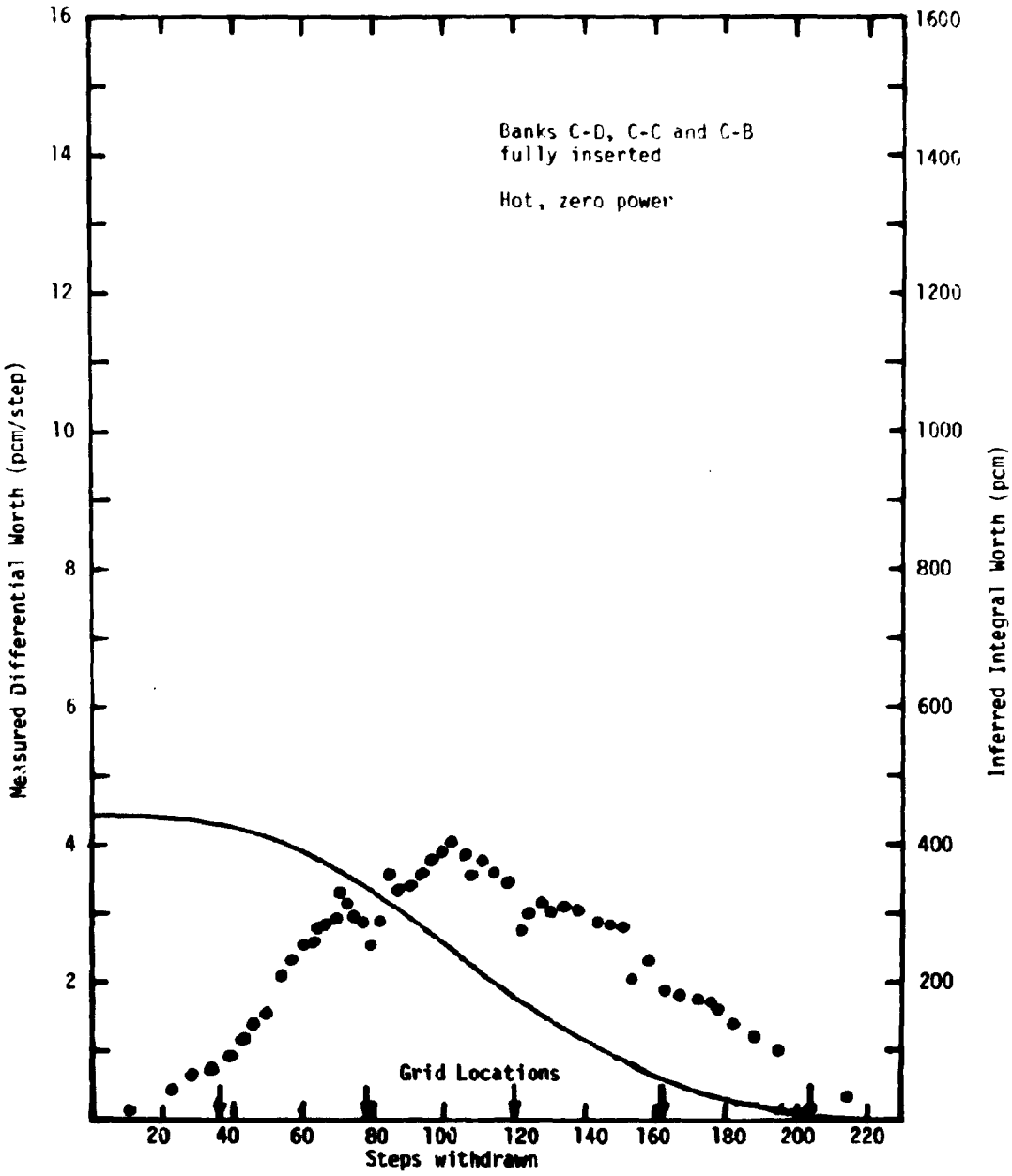

Diagram 3.1.1-4 Differential and Integral Worths of Control Bank A at Startup of Zion Unit 2, Cycle 1

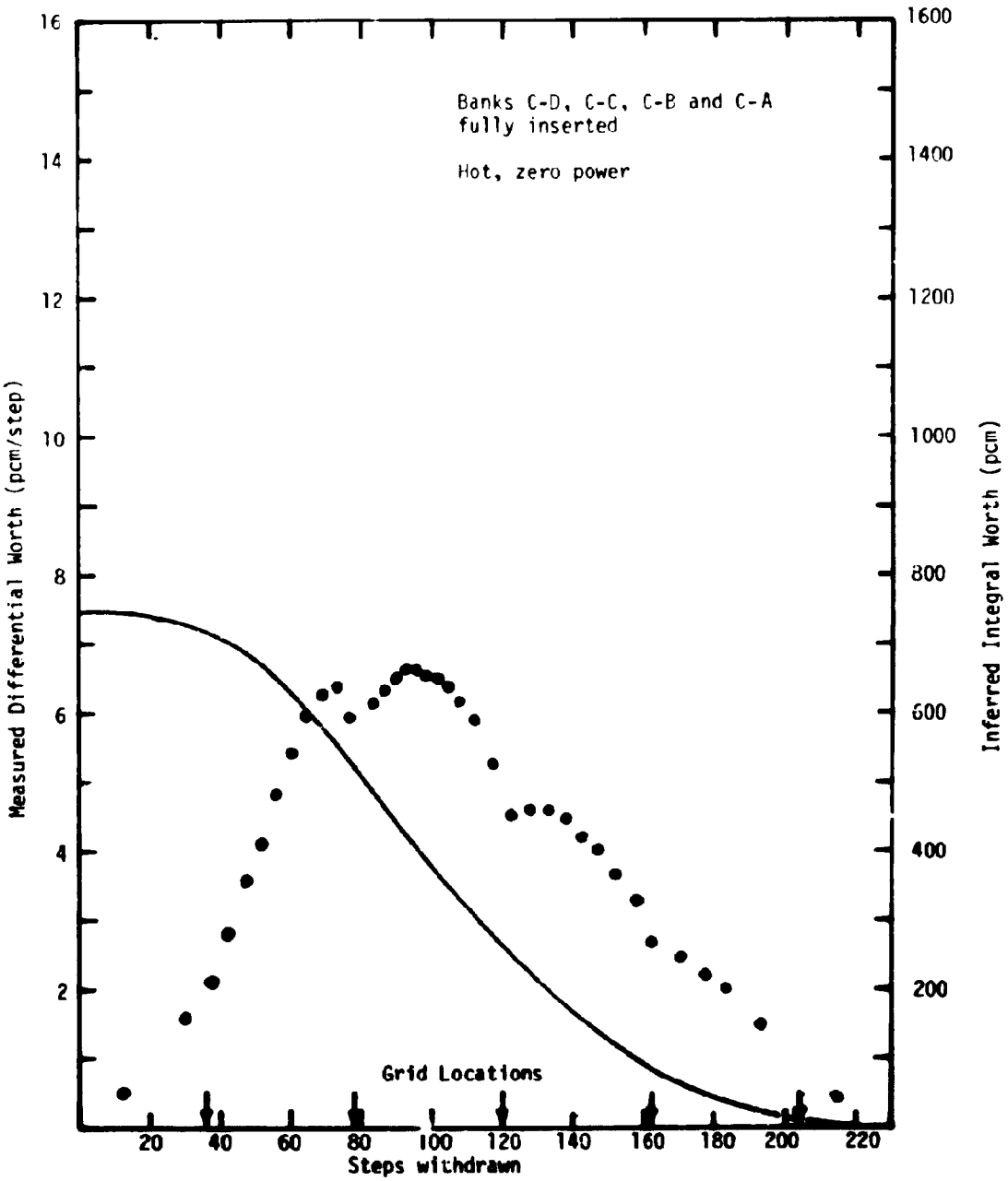

Diagram 3.1.1-5 Differential and Integral Worths of Shutdown Bank D at Startup of Zion Unit 2, Cycle 1

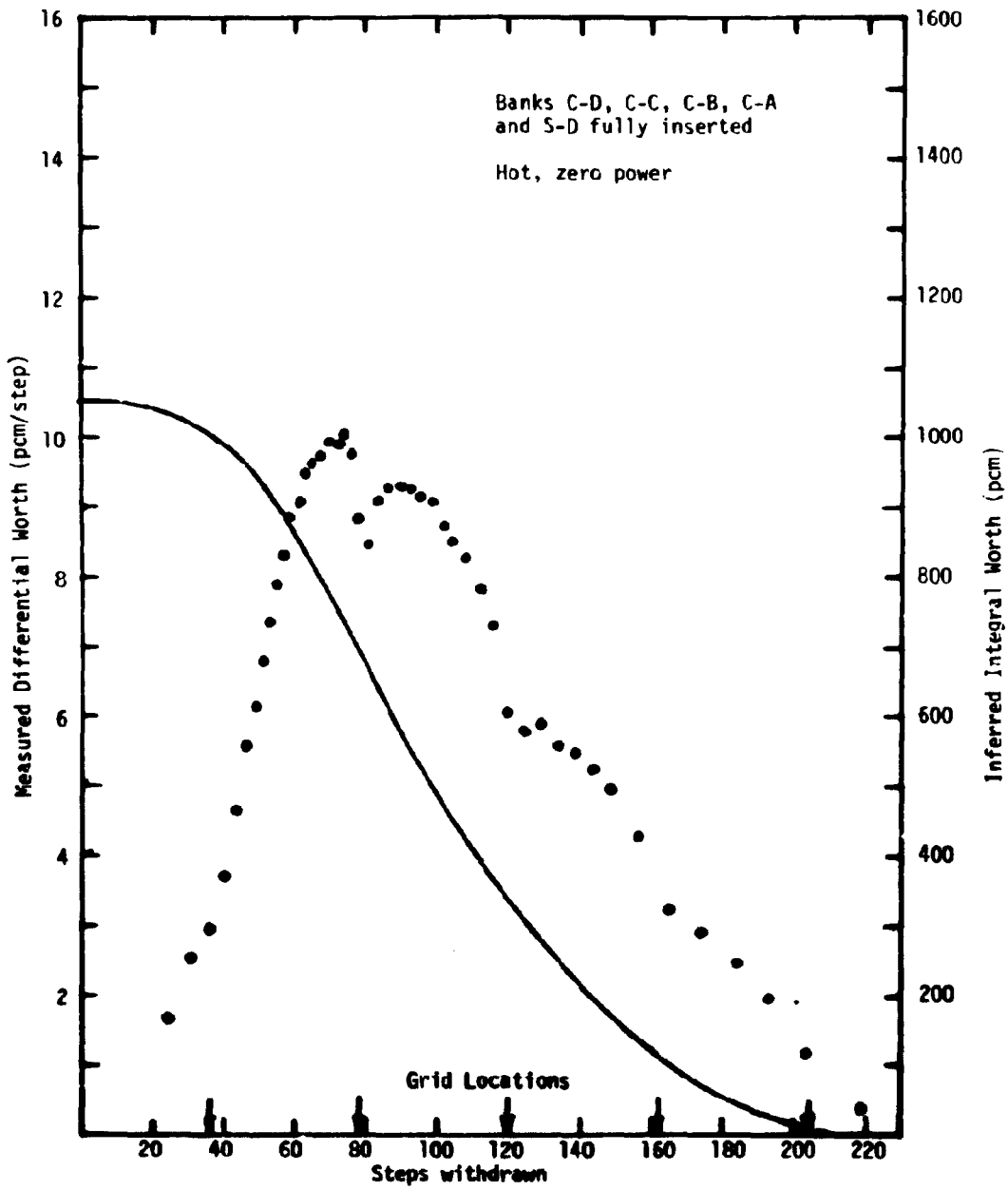

Diagram 3.1.1-6 Differential and Integral Worths of Shutdown Bank C at Startup of Zion Unit 2, Cycle 1

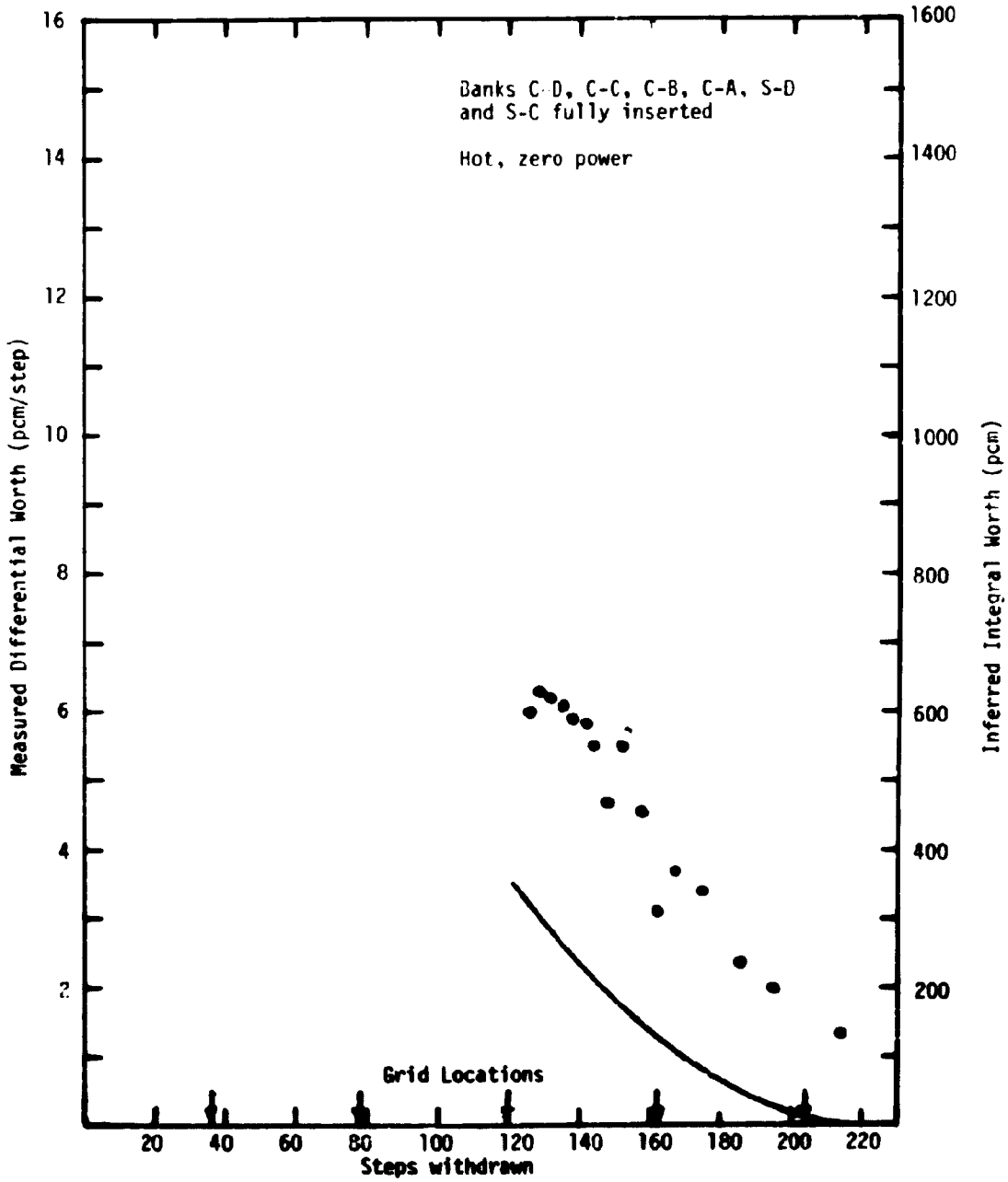

Diagram 3.1.1-7 Differential and Integral Worths (Incomplete) of Shutdown Bank B at Startup of Zion Unit 2, Cycle 1

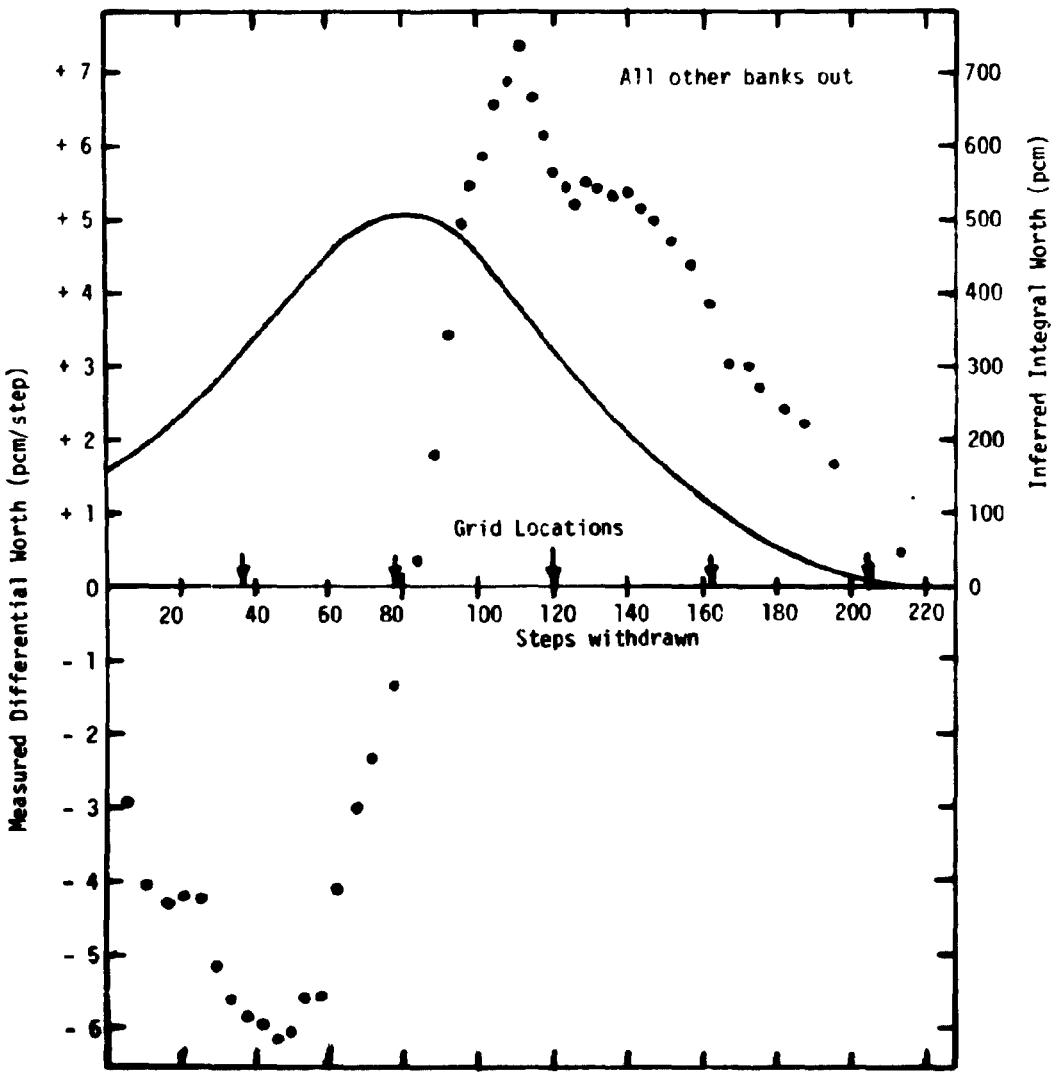

Diagram 3.1.1-8 Differential and Integral Worths of the Part Length Bank at Startup of Zion Unit 2, Cycle 1

Bank	Integral Worth Inferred from Measurement
Control Bank D	1332 pcm
Control Bank C	1078 pcm
Control Bank B	1457 pcm
Control Bank A	441 pcm
Shutdown Bank D	747 pcm
Shutdown Bank C	1050 pcm

TABLE 3.1.1-2 Integral Worths of Control Rod Banks in the Non-Overlap, Normal Insertion Sequence Mode Under Hot, Zero Power Conditions at Unit 2, Cycle 1 Startup

3.1.1.2 Boron Endpoints and Differential Boron Worths

During the control rod bank worth measurements critical boron concentration measurements were made in specified bank configurations ("endpoints" of bank movement in the non-overlapping bank sequencing mode) to establish direct, non-reactivity dependent determinations of the control and shutdown bank integral worths. For each measurement the specified endpoint control rod configuration was approximated as nearly as practical, the boron concentration in the reactor coolant system was allowed to come to equilibrium at the hot, zero power reference reactor coolant temperature of 547°F, and reactor coolant samples were drawn for chemical analysis. The boron concentrations in these samples were subsequently measured by standard chemical analysis techniques. Concurrently with the taking of reactor coolant samples, final adjustments were made in control rod bank positions to establish the specified endpoint configurations, and the magnitudes of the reactivity changes resulting from control rod movement were measured with the reactivity meter. The measured reactivity changes were converted to equivalent changes in boron concentration using best estimate values of differential boron worth, and the measured values of boron concentration obtained by chemical analysis of the reactor coolant samples were adjusted to correct the errors due to the small deviations from the specified endpoint configurations that were present when the reactor coolant samples were drawn. The values of the adjusted critical boron concentrations for the respective specified endpoint control rod bank configurations are listed in Table 3.1.1-3.

During the control rod bank worth measurements reactor coolant samples were also taken at 15 minute intervals and the boron concentrations were determined by chemical analysis. By correlating the measured boron concentrations with the control rod bank positions at the times that the reactor coolant samples were taken and then relating the bank positions to the

Endpoint Configuration	Adjusted Critical Boron Concentration (ppm)
All Banks Withdrawn	1350
Control Bank D Inserted	1209
Control Banks D & C Inserted	1087
Control Banks D, C & B Inserted	943
Control Banks D, C, B & A Inserted	903

TABLE 3.1.1-3 Adjusted Critical Boron Concentrations Derived from Direct Measurement in Various Control Rod Bank Endpoint Configurations in the Hot, Zero Power Condition at Unit 2, Cycle 1 Startup

inferred integral reactivity changes from the all rods out configuration, a plot of integral reactivity change versus boron concentration change (Diagram 3.1.1-9) was generated. The slope of the best estimate linear fit among the data points is inferred to be the differential reactivity worth of boron concentration noted on Diagram 3.1.1-9.

3.1.1.3 Differential Isothermal Temperature Coefficient

At a number of points in the sequence of measurements of control rod bank worth under hot, zero power conditions the dilution or boration operations were interrupted in order to perform measurements of the differential isothermal temperature coefficient. These measurements were carried out by controlling the reactor coolant system heat balance at zero power through adjustments of the condenser steam dump rate to establish uniform heatup and cooldown rates and monitoring with the reactivity computer the associated reactivity changes. Power levels were maintained sufficiently low that generation of sensible heat was avoided at all times. The heatup and cooldown rates selected were slow enough that with the absence of nuclear heating the fuel and coolant remained in effectively isothermal equilibrium. In all cases, prior to the start of the temperature coefficient measurements boron concentration equilibration in the reactor coolant system was obtained (in carrying out the boron endpoint determinations noted above). During each individual heatup or cooldown swing the control rods were held fixed, so that all observed reactivity changes could be attributed directly to the induced temperature changes.

The conditions under which the sets of differential isothermal temperature coefficient measurements were carried out and the results of the individual determinations on successive heatup and cooldown swings are listed in Table 3.1.1-4.

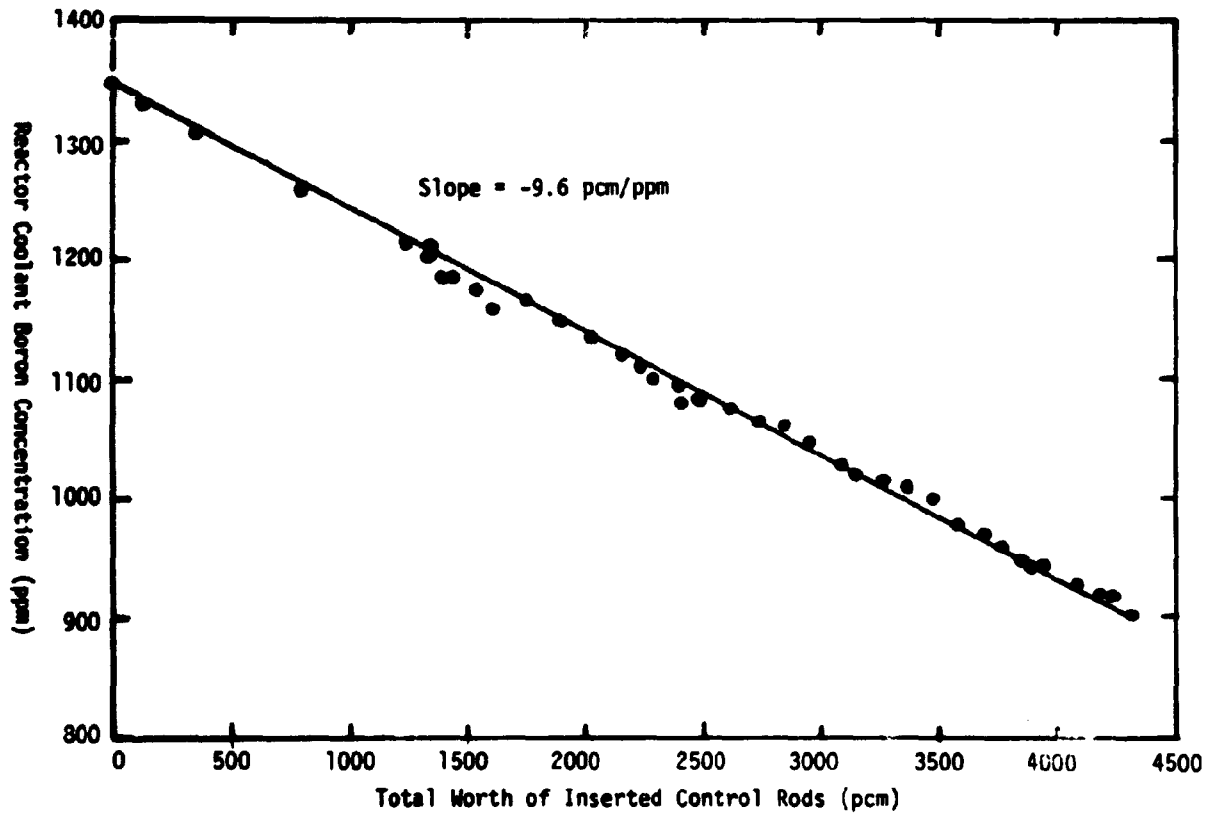

Diagram 3.1.1-9 Correlation of Reactor Coolant Boron Concentration with Total Worth of inserted Control Rods at Startup of Zion Unit 2, Cycle 1

Control Rod Bank Configuration	Approximate Boron Concentration (ppm)	Measured Differential Isothermal Temperature Coefficients (pcm/°F) During Heatups	During Cooldowns	Average
Control Bank D at 200 steps	1348	- 1.11 - 1.68	- 1.20 - 1.32	- 1.33
Control Bank D in Control Bank C at 180 steps	1203	- 4.85 - 5.53	- 5.13 - 5.27 - 5.29	- 5.21
Control Banks D & C in Control Bank B at 200 steps	1085	- 8.00 - 9.54	- 8.50 - 9.92	- 8.99
Control Banks D, C & B in Control Bank A at 180 steps	940	- 8.56 -11.60 -12.60	- 8.33 -10.00 -10.63	-10.29
Control Banks D, C, B & A in Shutdown Bank D at 194 steps	901	-13.36 -12.84	-13.28 -12.70	-13.05

TABLE 3.1.1-4 Measured Differential Isothermal Temperature Coefficients in Various Control Rod Bank Configurations under Hot, Zero Power Conditions at Unit 2, Cycle 1 Startup

3.1.1.4 Differential Power Coefficients

Differential power coefficient determinations were carried out during the 50% and 75% Plateau Physics Testing Programs. The coefficient was determined by performing a reactivity balance over a small power change that was accomplished by changing the turbine control set point in an increment of 5% to 10% of full power at a rate of approximately 1%/minute. Reactor coolant average temperature was controlled by manual control bank positioning to closely follow the prespecified program of coolant average temperature versus power level. The reactivity balance was constructed in each case by determining by direct measurement the amount of compensating reactivity change produced by control rod bank movement and by estimating by calculation the reactivity changes associated with xenon concentration changes and mismatches between the actual coolant average temperature and the programmed value. By algebraically combining the reactivity changes associated with control bank movement, xenon concentration change and undesired coolant average temperature change and attributing the negative of the algebraic sum to the change in power level as determined by calorimetric measurements before and after the power level change, an average value of the differential power coefficient was determined for each increment in power level. The measured results obtained for power level changes in the range from 18% to 75% of full power are shown in Diagram 3.1.1-10.

Values for the "doppler-only" component of the differential power coefficient were inferred by subtracting from the values of the differential power coefficient reported above calculated values of the coolant temperature contribution in each measurement. Inferred values of the "doppler-only" contribution to the differential power coefficient are shown in Diagram 3.1.1-11.

It should be noted in passing that somewhat less confidence should probably be assigned to the results of the at-power direct reactivity measurements compared to the results of zero power measurements by virtue of as yet

3.1.2.1 Differential and Integral Control Rod Bank Worths

The worths of each of the four controlling banks (CD, CC, CB, and CA) were obtained from incremental reactivity measurements made with the reactivity computer during reactor coolant system boration and dilution. As in the Cycle 1 startup, the measurements were made in the normal insertion sequence without overlap. The directly measured differential bank worth data are not available; however, the inferred integral bank worths are listed in Table 3.1.2-2.

3.1.2.2 Boron Endpoints and Differential Boron Worths

As in the Cycle 1 startup program critical boron concentration measurements were made near the "endpoint" control bank configurations in the normal withdrawal-insertion sequence. Direct measurements of the reactivity differences between the actual critical configurations in which the reactor coolant samples were drawn and the true "endpoint" configurations were made and the measured boron concentration values were adjusted to compensate for the measured differences. The resulting values of the corrected endpoint boron concentrations corresponding to the differentially measured control banks are given in Table 3.1.2-3.

The corrected endpoint boron concentrations are also correlated with the total change in core reactivity as successive control banks were inserted into the core in Diagram 3.1.2-5. The slope of the correlation corresponds to the value of the differential reactivity worth of boron concentration under the conditions of measurement.

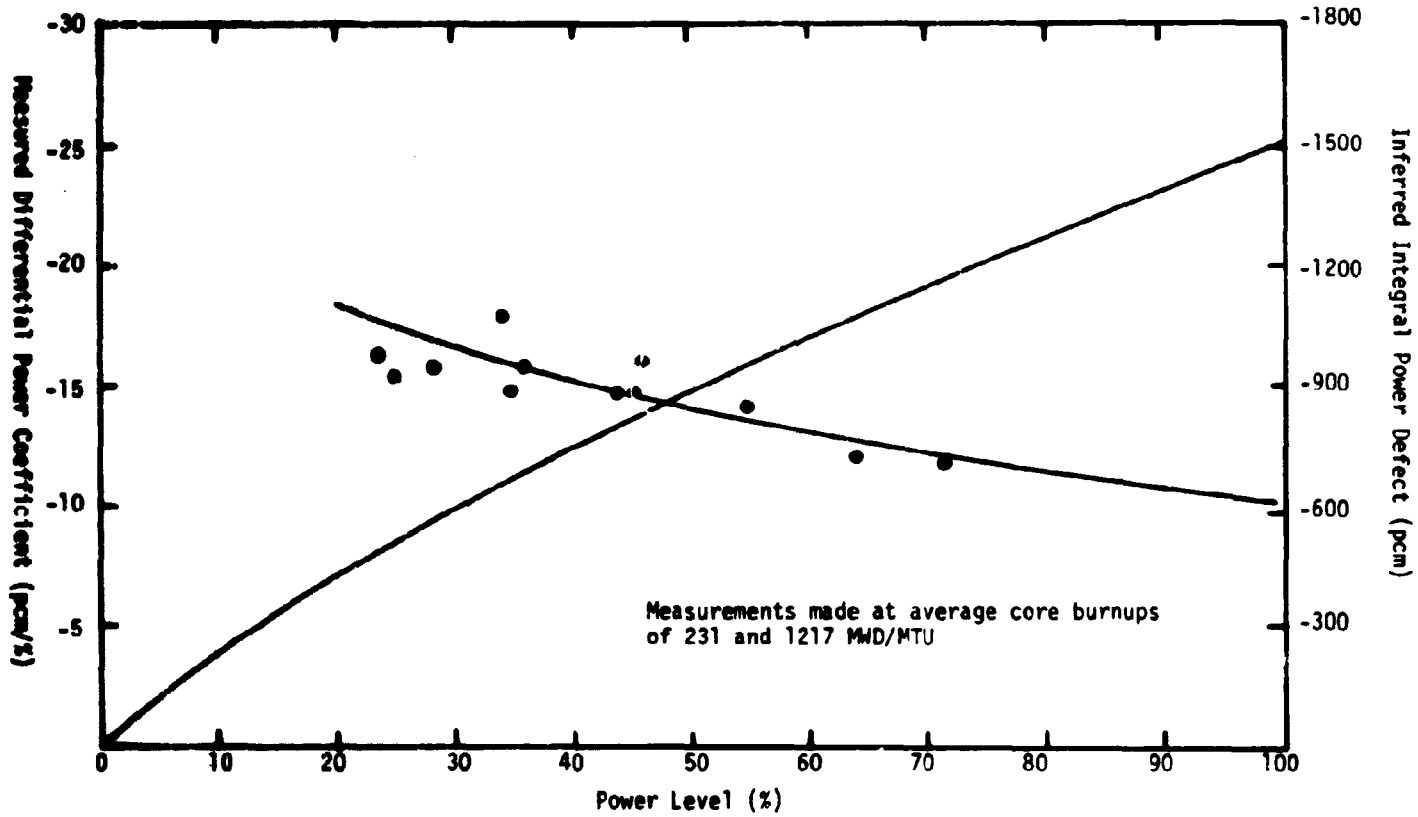

Diagram 3.1.1-10 Differential Combined Power Coefficient and Inferred Integral Combined Power Defect at Startup of Zion Unit 2, Cycle 1

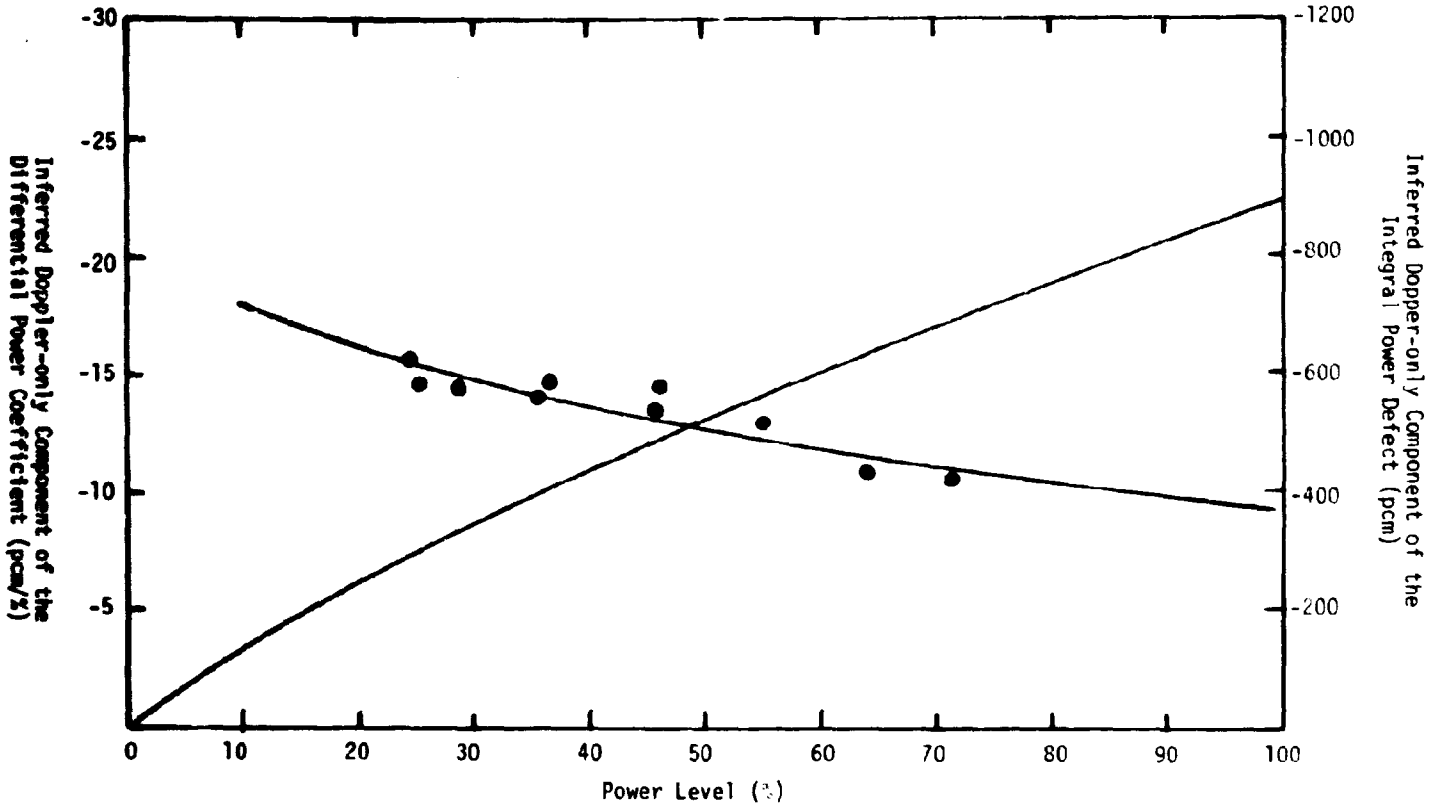

Diagram 3.1.1-11 Doppler-Only Components of the Differential Power Coefficient and Integral Power Defect at Startup of Zion Unit 2, Cycle 1

unresolved uncertainties associated with interpretation of at power differential control rod worth measurements and with the calculation of the reactivity worth of transient Xe-135.

3.1.2 Cycle 2 Startup Measurements

The program of core physics parameter measurements at the startup of Cycle 2 paralleled the Cycle 1 startup program. Methods, procedures and equipment utilized in the Cycle 1 program were carried over virtually without change to the Cycle 2 startup; however, the scope of the measurements was modified slightly in the Cycle 2 program. Direct measurements were made of:

- the differential worths ($\partial\rho/\partial h_n$) of the control banks (but not the shutdown banks) of control rods;
- the critical boron concentrations in the various control bank endpoint configurations;
- the differential isothermal temperature coefficients ($\partial\rho/\partial T$);

under hot, zero power conditions, and of

- the differential "isothermal" temperature coefficients ($\partial\rho/\partial T$);
- the differential power coefficients ($\partial\rho$ / % power)

under near full power conditions.

From the results of these direct measurements values were inferred for the integral worths of the differentially measured control banks and the differential worth of boron concentration in the hot, zero power condition, and the differential moderator temperature coefficient and differential doppler-only power coefficient at operating power levels.

The delayed neutron precursor yield fractions and decay constants programmed into the analog reactivity computer are listed in Table 3.1.2-1.

Delayed Precursor Group	Importance-Weighted Yield Fraction ($\beta_{i,eff}$)	Decay Constant (λ_i in seconds^{-1})
1	0.00016	0.0126
2	0.00114	0.0308
3	0.00103	0.1185
4	0.00208	0.3169
5	0.00074	1.2592
6	0.00025	3.3588

TABLE 3.1.2-1 Delayed Neutron Precursor Parameters Programmed in the Analog Reactivity Computer at Unit 2, Cycle 2 Startup

Bank	Integral Worth Inferred from Measurement (pcm)
Control Bank D	798
Control Bank C	833
Control Bank B	1164
Control Bank A	471

TABLE 3.1.2-2 Integral Worths of Control Banks in the Non-Overlap, Normal Sequence Mode under Hot, Zero Power Conditions at Unit 2, Cycle 2 Startup

Endpoint Configuration	Adjusted Critical Boron Concentration (ppm)
All Banks Withdrawn	1303
Control Bank D Inserted	1221
Control Banks D and C Inserted	1130
Control Banks D, C and B Inserted	1003
Control Banks D, C, B and A Inserted	940

TABLE 3.1.2-3 Adjusted Critical Boron Concentrations Derived from Direct Measurement in Various Control Bank Endpoint Configurations in the Hot, Zero Power Condition at Unit 2, Cycle 2 Startup

3.1.2.3 Differential Isothermal Temperature Coefficients at Zero Power

Determinations of the true differential isothermal temperature coefficient at zero power were made near the successive endpoint control bank configurations, as in the Cycle 1 startup program. In each configuration at least three individual direct measurements of the value of the isothermal temperature coefficient were made. The results of the individual measurements in each configuration were averaged to give a single value. The conditions under which the differential isothermal temperature coefficient determinations were made and the averaged result of each determination are listed in Table 3.1.2-4.

3.1.2.4 Differential Moderator Temperature Coefficients at Operating Power Levels

The power esculation part of the Cycle 1 startup program was extended at the Cycle 2 startup to include direct measurements of the "isothermal" temperature coefficient. The results given below from the Cycle 2 startup program are taken directly from the Zion Unit 2 Cycle 2 Startup Report prepared by Commonwealth Edison.

The differential "isothermal" temperature coefficient at power is defined to be the value of the change in core reactivity per unit change in moderator and fuel temperature (i.e. without change in core thermal power level), where it is recognized that the fuel and moderator temperatures are obviously not the same at power. The measurement procedure is virtually identical to the procedure used for differential power coefficient measurements with the exception that moderator temperature is varied while thermal power level is held as nearly constant as practical. Calculated values of the fuel temperature coefficients were subtracted from the directly measured values of the combined moderator temperature and fuel temperature coefficients to yield inferred values of the moderator-only temperature coefficients under at power operating conditions. The resulting values of the moderator only temperature coefficient are given in Table 3.1.2-5.

Control Bank Configuration	Boron Concentration (ppm)	Average Differential Isothermal Temperature Coefficient (pcm/°F)
Control Bank D at 211 steps	1300	- 1.85
Control Bank D in Control Bank C at 222 steps	1223	- 3.75
Control Banks D & C in Control Bank B at 203 steps	1137	- 6.65
Control Banks D, C & B in Control Bank A at 220 steps	1002	- 7.99
Control Banks D, C & B in Control Bank A at 25 steps	995	- 9.93

TABLE 3.1.2-4 Measured Differential Isothermal Temperature Coefficients in Various Control Bank Configurations under Hot, Zero Power Conditions at Unit 2, Cycle 2 Startup

Mean Power Level (% of Full Power)	Mean Average Moderator Temperature (°F)	Boron Concentration (ppm)	Inferred Differential Moderator Coefficient (pcm/°F)
75	554.5	911	- 6.2
75	554.1	911	- 7.1
75	554.9	911	- 7.6
75	555.1	911	- 6.7
99	558.8	806	- 8.0
99	558.6	806	- 9.1

TABLE 3.1.2-5 Inferred Differential Moderator Temperature Coefficients at Operating Power Levels at Unit 2, Cycle 2 Startup

3.1.2.5 Differential Doppler-Only Power Coefficients

In a related series of measurements at operating power levels determinations were made of the doppler-only (i.e. fuel temperature only) component of the differential power coefficient. Since the direct measurements of power coefficient includes small changes in moderator temperature the directly measured results were corrected to remove the reactivity contribution due to moderator temperature change. The resulting inferred values of the doppler-only component of the differential power coefficient are plotted in Diagram 3.1.2-6.

As noted previously somewhat less confidence should be assigned to the results of direct reactivity measurements made at operating power levels due to the uncertainties associated with interpretation of the differential control bank worth determinations at power and, in some cases, with the estimation of the reactivity worth of transient xenon.

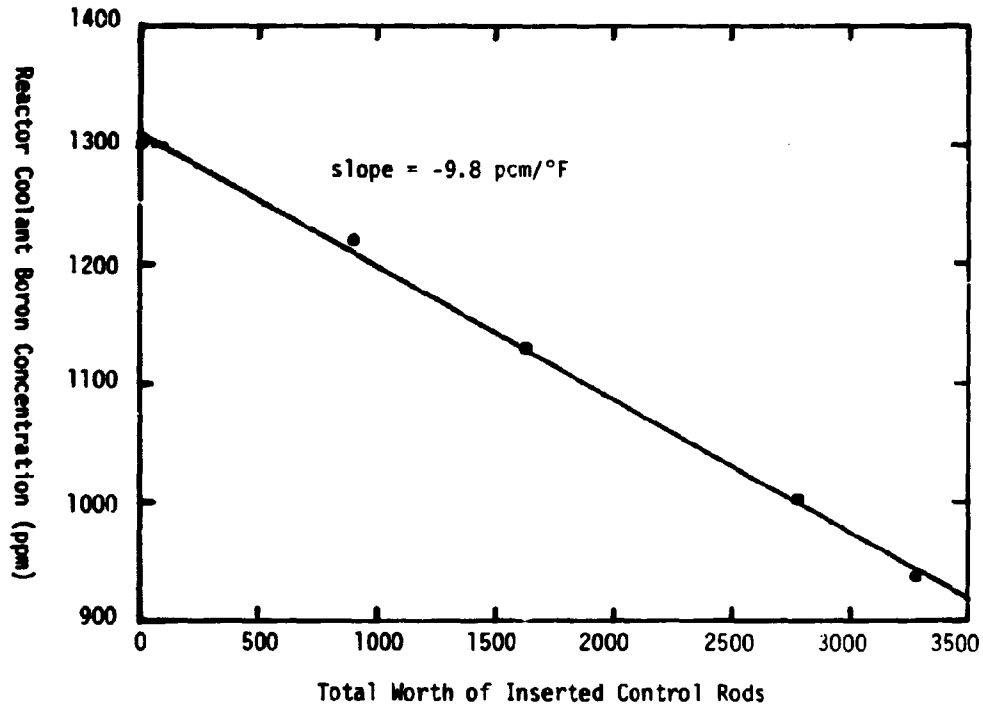

Diagram 3.1.2-1 Correlation of Reactor Coolant Boron Concentration with Total Worth of Inserted Control Rods at Startup of Zion Unit 2, Cycle 2

3.2 OPERATING HISTORY

Data have been assembled to characterize the operating history of Zion Unit 2 through all of Cycle 1 and the first half of Cycle 2 (through September 1977). Primary data, which were taken from the on-site computer logs, core burnup records, and from chemistry records, consisted of:

- total thermal energy generated per day
- hourly power levels
- hourly control bank D positions
- hourly part length bank positions
- hourly moderator average temperatures
- hourly primary system pressures
- hourly axial offset values
- daily reactor coolant boron concentrations (including time of sampling)

From these data the daily average power level and the total core burnup at the end of each day were determined and, where appropriate, statepoint data, consisting of concurrent values of power level, control bank D position, moderator average temperature and pressure, reactor coolant boron concentration and axial offset, were compiled. Periodic flux maps, to be discussed in Section 3.3, yielded regional power distribution factors that were used to compute the region average burnup values on a monthly basis. Small differences between the core burnup value at the end of the last day of the month and the monthly value are the result of numerical roundoff in calculating the daily values.

The daily average power and the burnup at the end of each day provide day by day indications of gross thermal energy output of the core. The statepoint data yielded continuing indications of core reactivity depletion as thermal energy was produced. In principle, the axial offset values included

in the statepoint data sets give an indication of the axial power shape at the time the statepoint was established,

$$\text{Axial Offset} = \frac{\text{Total Power Generation in Top Half of Core} - \text{Total Power Generation in Bottom Half of Core}}{\text{Total Power Generation in Both Halves of Core}}$$

However, the axial offset values available in the on-site computer logs are inferred values which are obtained by applying calibration factors to the signals generated by the top and bottom halves of the individual long ion chambers. Some uncertainty exists regarding both the sources and the absolute values of these calibration factors; therefore, the axial offset values should be assigned a higher degree of uncertainty than the other data values in each statepoint set.

The representations of the core operating history in the remainder of this section take two forms, tabular and graphical. The tabular representations, Table 3.2.1, list all relevant data on a day by day and month by month basis. Column headings are explained in the first page of the tabulation. The graphical representations, Diagrams 3.2-1 through 3.2-46 show the larger part of the same data in histogram form for more convenient reference. In the histograms bars (——) indicate daily average values, dots (·) indicate statepoint data set values. The clock time of the statepoint data set is not indicated.

Coolant average temperature is closely correlated with power level; hence, separate histograms of coolant average temperature have not been prepared. The correlations take the forms

$$T_{avg} = 546.9 + 0.1309 * (\% \text{ of full power})$$

for Cycle 1, and

$$T_{avg} = 548.0 + 0.1018 * (\% \text{ of full power})$$

for Cycle 2. Fluctuations in reactor coolant pressure around the 2250 psig set point were consistently too small to have an observable effect on core reactivity or on core power distribution. Accordingly, reactor coolant pressure histograms also have not been prepared. Dates on which flux maps, whose results are summarized in Section 3.3, were taken are indicated in both the Table and the Diagrams. Absence of statepoint data on a given date in both the Table and the Diagram may be attributed to one of three conditions:

1) The reactor was subcritical on that date, in which case statepoint data is not meaningful. The shutdown condition is indicated in both the tabular and the graphical representations.
2) The reactor was in a transient state at the time the reactor coolant sample was secured for boron concentration determination, in which case detailed hour by hour records of power level and control rod position (at the minimum) would be required if the statepoint data set were to be usable.
3) The on-site computer malfunctioned on that date.

In general, the absence of data because the reactor was in a transient state can be distinguished from the absence of data due to computer malfunction by noting whether the average daily power level value for the date in question differed significantly from that on the preceding and/or following date. If the difference was significant a transient condition existed; if the difference was negligible, computer malfunction during steady state operation can be assumed.

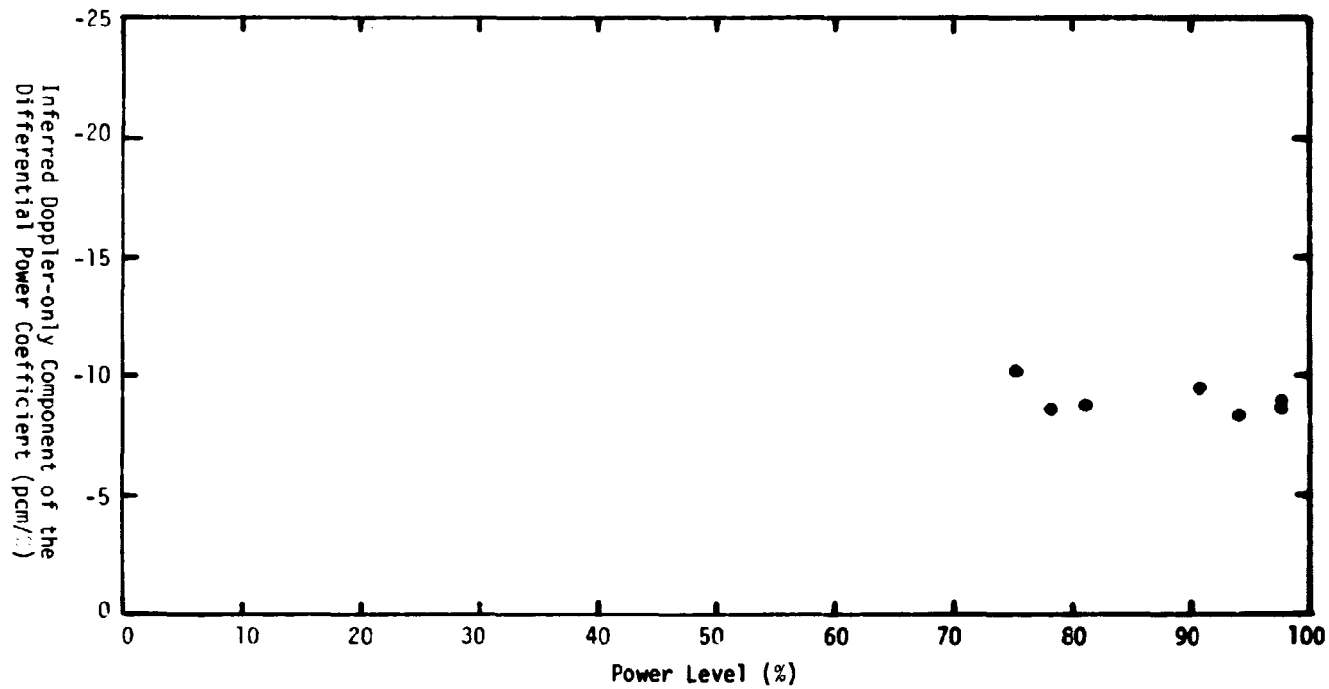

Diagram 3.1.2-2 Doppler-only Component of the Differential Power Coefficient at Startup of Zion Unit 2, Cycle 2

OPERATING DATA FOR THE ZION NUCLEAR STATION, UNIT 2

EXPLANATION OF FORMAT

AVG. POWER	Reactor thermal power level, averaged over calendar day, expressed as percent of full power (3250 MWTH) Flags on average power H = Hot shutdown/hot standby C = Cold shutdown S = Reactor shutdown, either in transition between shutdown states, or shutdown state undetermined Z = HZP testing D = Change to or from daylight savings time (non-24 hour day)
BURNUP	Core average burnup at end of day in MWD/MTU units
INSTNT POWER	Reactor thermal power level, recorded on the hour. Entry chosen is that closest to time of boron sample expressed as percent of full power.
BORON	Boron concentration in PPM
CONTROL BANK D	Position of control bank D in steps withdrawn. 228 steps = fully withdrawn.
P/L RODS	Position of the part length control rods in steps withdrawn. 228 steps = fully withdrawn.
TEMP.	Temperature in degrees F
PRES.	Pressure in PSIG
AVG. AXIAL OFFSET	Axial offset in units of percent averaged among all responding excore channels
STATUS	Equilibrium conditions - indicates that reactor has operated at essentially constant power for at least 36 hours. E = Spatial equilibrium (at least axially) X = Long term spatial transient (period on order of 24 hrs.) possibly xenon oscillation S = Short term spatial transient, either small period or no oscillation P = Power constant, excore data insufficient to establish spatial behavior
FLUX MAP	Identifying number of incore flux map taken on the indicated day

TABLE 3.2-1 TABULATED OPERATING HISTORY FOR ZION UNIT 2, CYCLE 1 and CYCLE 2 THROUGH SEPTEMBER 1977

DECEMBER 1973 ZION UNIT 2

DATE	AVG. POWER	BURNUP AT END OF DAY	INST. POWER	BORON CONC.	CONTROL BANK D	P/L RODS	TEMP.	PRES.	AVG. AXIAL OFFSET	STATUS	FLUX MAP
								START OF CYCLE 1			
DEC 24	0.0Z	0.0		1338							
DEC 25	1.7Z	0.6		1325							
DEC 26	0.8Z	0.9		1229							
DEC 27	0.0C	0.9		1314							
DEC 28	0.0C	0.9		1363							
DEC 29	0.0C	0.9		1358							
DEC 30	0.0C	0.9		1349							
DEC 31	0.0C	0.9		1355							

JANUARY 1974 ZION UNIT 2

DATE	AVG. POWER	BURNUP AT END OF DAY	INST. POWER	BORON CONC.	CONTROL BANK D	P/L RODS	TEMP.	PRES.	AVG. AXIAL OFFSET	STATUS	FLUX MAP
JAN 1	0.0C	0.9		1372							
JAN 2	0.0C	0.9		1372							
JAN 3	0.0C	0.9		1363							
JAN 4	0.0S	0.9		1396							
JAN 5	0.0Z	0.9		1415							
JAN 6	0.5Z	1.1		1358							
JAN 7	1.0Z	1.5		1087							
JAN 8	0.0Z	1.5		937							
JAN 9	0.0Z	1.5		686							
JAN 10	1.6Z	2.1		1313							
JAN 11	3.5Z	3.4		1287							
JAN 12	1.9	4.1		1277							
JAN 13	2.0	4.9		1293							
JAN 14	3.7	5.2		1283							
JAN 15	5.0	8.1	13.0	1219	199	228					
JAN 16	6.5	10.5		1209							
JAN 17	0.0H	10.5		1409							
JAN 18	0.0S	10.5		1409							
JAN 19	0.0S	10.5		1397							
JAN 20	0.0C	10.5		1393							
JAN 21	0.0C	10.5		1393							
JAN 22	0.0C	10.5		1539							
JAN 23	0.0C	10.5		1462							
JAN 24	0.0C	10.5		1467							
JAN 25	0.0C	10.5		1469							
JAN 26	0.0C	10.5		1451							
JAN 27	0.0C	10.5		1446							
JAN 28	0.0C	10.5		1459							
JAN 29	0.0C	10.5		1441							
JAN 30	0.0C	10.5		1451							
JAN 31	0.0C	10.5		1425							

BURN-UP DATA FOR JANUARY 1974

FLUX MAP 2-1- 6 USED FOR BURN-UP CALCULATIONS

REGION	BURN-UP (MWD/MTU)
1	11.8
2	11.1
3	8.7
CORE	10.6

FEBRUARY 1974 ZION UNIT 2

DATE	AVG. POWER	BURNUP AT END OF DAY	INST. POWER	BORON CONC.	CONTROL BANK D	P/L RODS	TEMP.	PRES.	AVG. AXIAL OFFSET	STATUS	FLUX MAP
FEB 1	0.0C	10.5		1433							
FEB 2	0.0C	10.5		1412							
FEB 3	0.0C	10.5		1422							
FEB 4	0.0C	10.5		1398							
FEB 5	0.0C	10.5		1380							
FEB 6	0.0C	10.5		1433							
FEB 7	0.0C	10.5		1419							
FEB 8	0.0C	10.5		1391							
FEB 9	0.0C	10.5		1406							
FEB 10	0.0C	10.5		1391							
FEB 11	0.0S	10.5		1381							
FEB 12	0.1	10.6		1402							
FEB 13	11.8	15.0		1280							
FEB 14	24.5	24.2		1150							
FEB 15	12.5	28.8		1081							
FEB 16	0.4	29.0		1086							
FEB 17	13.7	34.1		1136							
FEB 18	25.0	43.4		1139							
FEB 19	26.5	53.4	25.0	1078	191	228	549.7	2243			2-1- 6
FEB 20	30.0	64.6		1065							
FEB 21	33.4	77.1	33.3	1057	192	228	550.9	2246			
FEB 22	34.7	90.0	35.0	1041	193	228	550.5	2247			
FEB 23	34.5	102.9	35.0	1036	201	228	549.6	2251			
FEB 24	34.0	115.6	34.0	1039	185	228	548.8	2250			
FEB 25	32.2	127.7	35.0	1049	181	228	548.0	2250			2-1- 7
FEB 26	16.5	133.9		1057							
FEB 27	35.6	147.2		1073							
FEB 28	34.0	159.9		1028							

BURN-UP DATA FOR FEBRUARY 1974

FLUX MAP 2-1- 7 USED FOR BURN-UP CALCULATIONS

REGION	BURN-UP (MWD/MTU)
1	178.9
2	168.6
3	131.8
CORE	159.9

MARCH 1974 ZION UNIT 2

DATE	AVG. POWER	BURNUP AT END OF DAY	INST. POWER	BORON CONC.	CONTROL BANK D	P/L RODS	TEMP.	PRES.	AVG. AXIAL OFFSET	STATUS	FLUX MAP
MAR 1	37.5	173.9		1031							
MAR 2	28.6	184.6	49.0	1002	197	228	553.1	2230			
MAR 3	0.0H	184.6		1015							
MAR 4	0.0H	184.6		1241							
MAR 5	0.0C	184.6		1208							
MAR 6	0.0C	184.6		1216							
MAR 7	0.0C	184.6		1209							
MAR 8	0.0C	184.6		1209							
MAR 9	0.0C	184.6		1211							
MAR 10	0.0C	184.6		1207							
MAR 11	0.0S	184.6		1213							
MAR 12	0.0H	184.6		1237							
MAR 13	10.5	188.5		1232							
MAR 14	[illegible].7	204.5		1081							
MAR 15	37.9	218.7		997							
MAR 16	47.4	236.4		977							
MAR 17	49.2	254.8	50.0	994	177	228	552.6	2232			
MAR 18	49.7	273.4	50.0	1012	206	228	552.5	2235			2-1- 9
MAR 19	49.5	291.9		979							
MAR 20	49.4	310.3		1021						P	
MAR 21	48.1	328.3	48.0	1003	215	228	554.2	2230			
MAR 22	46.6	345.7		970							
MAR 23	30.5	357.1		980							
MAR 24	35.5	370.4		983							
MAR 25	48.4	388.5		1017							
MAR 26	48.2	406.5	48.5	986	194	228	553.3	2227			
MAR 27	49.4	425.0	48.5	986	192	228	553.6	2227	-7.7		
MAR 28	49.5	443.5	50.0	978	186	228	554.8	2227	-6.9		
MAR 29	19.7	450.9		975							
MAR 30	0.0H	450.9		944							
MAR 31	0.0H	450.9		1036							

BURN-UP DATA FOR MARCH 1974

FLUX MAP 2-1- 7 USED FOR BURN-UP CALCULATIONS

REGION	BURN-UP (MWD/MTU)
1	504.5
2	475.3
3	371.8
CORE	450.8

APRIL 1974 ZION UNIT 2

DATE	AVG. POWER	BURNUP AT END OF DAY	INST. POWER	BORON CONC.	CONTROL BANK D	P/L RODS	TEMP.	PRES.	AVG. AXIAL OFFSET	STATUS	FLUX MAP
APR 1	7.2	453.6	2.0	1154	214	228	548.9	2228	-16.3		
APR 2	29.9	464.8	50.0	1117	200	228	551.9	2228	3.9		
APR 3	28.9	475.6	50.0	1037	194	228	552.4	2226	-4.2		
APR 4	41.5	491.1	49.0	1054	136	228	553.4	2197	-33.7		
APR 5	46.0	508.3	49.0	1008	202	228	552.4	2201	-5.1		
APR 6	0.0S	508.3		1192							
APR 7	0.0C	508.3		1202							
APR 8	0.0C	508.3		1202							
APR 9	0.0C	508.3		1208							
APR 10	0.0C	508.3		1193							
APR 11	0.0C	508.3		1185							
APR 12	0.0C	508.3		1198							
APR 13	0.0C	508.3		1211							
APR 14	0.0S	508.3		1196							
APR 15	0.0H	508.3		1213							
APR 16	24.9	517.6		1218							
APR 17	23.9	526.5	59.3	1015	199	228	553.6	2223	-3.5		
APR 18	0.0S	526.5		1160							
APR 19	0.0C	526.5		1267							
APR 20	0.0C	526.5		1282							
APR 21	0.0C	526.5		1249							
APR 22	0.0C	526.5		1307							
APR 23	0.0C	526.5		1306							
APR 24	0.0C	526.5		1281							
APR 25	0.0C	526.5		1289							
APR 26	0.0C	526.5		1289							
APR 27	0.0C	526.5		1289							
APR 28	0.0C	526.5		1289							
APR 29	0.0C	526.5		1286							
APR 30	0.0C	526.5		1270							

BURN-UP DATA FOR APRIL 1974

FLUX MAP 2-1- 7 USED FOR BURN-UP CALCULATIONS

REGION	BURN-UP (MWD/MTU)
1	589.1
2	555.0
3	434.1
CORE	526.4

MAY 1974 ZION UNIT 2

DATE	AVG. POWER	BURNUP AT END OF DAY	INST. POWER	BORON CONC.	CONTROL BANK D	P/L RODS	TEMP.	PRES.	AVG. AXIAL OFFSET	STATUS	FLUX MAP
MAY 1	0.0C	526.5		1274							
MAY 2	0.0C	526.5		1212							
MAY 3	0.0C	526.5		1318							
MAY 4	0.0C	526.5		1264							
MAY 5	0.0C	526.5		1279							
MAY 6	0.0C	526.5		1262							
MAY 7	0.0C	526.5									
MAY 8	0.0C	526.5									
MAY 9	0.0C	526.5									
MAY 10	0.0C	526.5									
MAY 11	0.0C	526.5									
MAY 12	0.0C	526.5									
MAY 13	0.0C	526.5									
MAY 14	0.0C	526.5									
MAY 15	0.0C	526.5									
MAY 16	0.0C	526.5									
MAY 17	0.0C	526.5									
MAY 18	0.0C	526.5									
MAY 19	0.0C	526.5									
MAY 20	0.0C	526.5									
MAY 21	0.0C	526.5									
MAY 22	0.0C	526.5									
MAY 23	0.0C	526.5									
MAY 24	0.0C	526.5									
MAY 25	0.0C	526.5									
MAY 26	0.0C	526.5									
MAY 27	0.0C	526.5									
MAY 28	0.0C	526.5									
MAY 29	0.0C	526.5									
MAY 30	0.0C	526.5									
MAY 31	0.0C	526.5									

JUNE 1974 ZION UNIT 2

DATE	AVG. POWER	BURNUP AT END OF DAY	INST. POWER	BORON CONC.	CONTROL BANK D	P/L RODS	TEMP.	PRES.	AVG. AXIAL OFFSET	STATUS	FLUX MAP
JUN 1	0.0C	526.5									
JUN 2	0.0C	526.5									
JUN 3	0.0C	526.5									
JUN 4	0.0C	526.5									
JUN 5	0.0C	526.5									
JUN 6	0.0C	526.5									
JUN 7	0.0C	526.5									
JUN 8	0.0C	526.5									
JUN 9	0.0C	526.5									
JUN 10	0.0C	526.5									
JUN 11	0.0C	526.5									
JUN 12	0.0C	526.5									
JUN 13	0.0C	526.5									
JUN 14	0.0C	526.5									
JUN 15	0.0C	526.5									
JUN 16	0.0C	526.5									
JUN 17	0.0C	526.5									
JUN 18	0.0C	526.5									
JUN 19	0.0C	526.5									
JUN 20	0.0C	526.5									
JUN 21	0.0C	526.5									
JUN 22	0.0C	526.5									
JUN 23	0.0C	526.5									
JUN 24	0.0C	526.5									
JUN 25	0.0C	526.5									
JUN 26	0.0C	526.5									
JUN 27	0.0C	526.5									
JUN 28	0.0C	526.5									
JUN 29	0.0C	526.5									
JUN 30	0.0C	526.5									

JULY 1974 ZION UNIT 2

DATE	AVG. POWER	BURNUP AT END OF DAY	INST. POWER	BORON CONC.	CONTROL BANK D	P/L RODS	TEMP.	PRES.	AVG. AXIAL OFFSET	STATUS	FLUX MAP
JUL 1	0.0C	526.5									
JUL 2	0.0C	526.5									
JUL 3	0.0C	526.5									
JUL 4	0.0C	526.5									
JUL 5	0.0C	526.5									
JUL 6	0.0C	526.5									
JUL 7	0.0C	526.5									
JUL 8	0.0C	526.5									
JUL 9	0.0C	526.5									
JUL 10	0.0C	526.5									
JUL 11	0.0C	526.5									
JUL 12	0.0C	526.5									
JUL 13	0.0C	526.5									
JUL 14	0.0C	526.5									
JUL 15	0.0C	526.5									
JUL 16	0.0C	526.5									
JUL 17	0.0C	526.5									
JUL 18	0.0C	526.5									
JUL 19	0.0C	526.5									
JUL 20	0.0C	526.5									
JUL 21	0.0C	526.5									
JUL 22	0.0C	526.5									
JUL 23	0.0C	526.5									
JUL 24	0.0C	526.5									
JUL 25	0.0C	526.5									
JUL 26	0.0C	526.5									
JUL 27	0.0C	526.5									
JUL 28	0.0C	526.5									
JUL 29	0.0C	526.5									
JUL 30	0.0C	526.5									
JUL 31	0.0C	526.5									

AUGUST 1974 ZION UNIT 2

DATE	AVG. POWER	BURNUP AT END OF DAY	INST. POWER	BORON CONC.	CONTROL BANK D	P/L RODS	TEMP.	PRES.	AVG. AXIAL OFFSET	STATUS	FLUX MAP
AUG 1	0.0C	526.5		1307							
AUG 2	0.0C	526.5		1293							
AUG 3	0.0C	526.5		1309							
AUG 4	0.0C	526.5		1304							
AUG 5	0.0C	526.5		1298							
AUG 6	0.0C	526.5		1300							
AUG 7	0.0C	526.5		1307							
AUG 8	0.0C	526.5		1301							
AUG 9	0.0C	526.5		1305							
AUG 10	0.0C	526.5		1297							
AUG 11	0.0C	526.5		1289							
AUG 12	0.0C	526.5		1301							
AUG 13	0.0C	526.5		1310							
AUG 14	0.0C	526.5		1295							
AUG 15	0.0C	526.5		1295							
AUG 16	0.0C	526.5		1277							
AUG 17	0.0C	526.5		1298							
AUG 18	0.0S	526.5		1295							
AUG 19	0.0H	526.5		1308							
AUG 20	0.0H	526.5		1320							
AUG 21	0.5	526.7		1218							
AUG 22	0.3	526.8		1233							
AUG 23	0.9	527.2		1265							
AUG 24	2.6	528.1		1246							
AUG 25	1.3	528.5		1241							
AUG 26	0.0H	528.6		1235							
AUG 27	1.7	529.3		1232							
AUG 28	25.7	538.9	3.0	1198	78	228	548.3	2221			
AUG 29	40.2	553.9		954							
AUG 30	0.0H	553.9		1225							
AUG 31	0.0H	553.9		1219							

BURN-UP DATA FOR AUGUST 1974

FLUX MAP 2-1- 7 USED FOR BURN-UP CALCULATIONS

REGION	BURN-UP (MWD/MTU)
1	619.7
2	583.9
3	456.7
CORE	553.8

SEPTEMBER 1974 ZION UNIT 2

DATE	AVG. POWER	BURNUP AT END OF DAY	INST. POWER	BORON CONC.	CONTROL BANK D	P/L RODS	TEMP.	PRES.	AVG. AXIAL OFFSET	STATUS	FLUX MAP
SEP 1	0.0H	553.9		1059							
SEP 2	1.5	554.5		1078							
SEP 3	51.8	573.8	54.0	1151	206	229	553.4	2218			
SEP 4	18.8	580.9	53.0	986	205	228	552.5	2218	-1.4		
SEP 5	0.2	580.9		933							
SEP 6	0.6	581.2		1037							
SEP 7	26.4	591.0		1111							
SEP 8	46.7	608.5	47.5	1035	200	228	552.6	2218	-1.5		
SEP 9	54.8	629.0	47.0	1000	192	228	552.9	2218	-2.6		
SEP 10	46.3	646.3		945							
SEP 11	17.2	652.7	45.0	974	194	228	552.7	2218	-2.9		
SEP 12	0.8	653.0		990							
SEP 13	19.0	660.1	45.0	1128	198	228	551.6	2217	-3.5		
SEP 14	9.6	663.7	38.0	1103	184	228	551.4	2221	-6.1		
SEP 15	39.2	678.4		1105							
SEP 16	48.0	696.3	48.0	995	209	228	552.7	2221	-1.3		
SEP 17	18.0	703.0		949							
SEP 18	2.7	704.1		947							
SEP 19	34.8	717.1	36.0	1150	149	228	551.2	2219	-14.2		
SEP 20	47.9	735.0	47.0	1021	208	228	553.2	2220	-1.4		
SEP 21	48.1	753.0	48.0	992	210	228	552.7	2223	-1.2	E	2-1-26
SEP 22	47.4	770.7	47.0	986	200	228	553.0	2223	-2.0	X	
SEP 23	48.0	788.6	48.0	991	197	228	552.7	2219	-1.8	X	
SEP 24	47.6	806.4	45.0	986	196	228	552.3	2223	-2.2		
SEP 25	39.1	821.0	48.0	981	194	228	552.9	2223	-2.5		
SEP 26	41.5	836.6	18.0	930	178	228	550.8	2227	-13.1		
SEP 27	69.5	852.5	70.0	960	208	228	555.2	2227	-2.0		
SEP 28	53.4	882.5	70.0	931	214	228	555.3	2226	-1.6		
SEP 29	1.8	883.2		848							
SEP 30	38.6	897.6	48.0	1145	193	228	552.6	2226	-1.6		

BURN-UP DATA FOR SEPTEMBER 1974

FLUX MAP 2-1-26 USED FOR BURN-UP CALCULATIONS

REGION	BURN-UP (MWD/MTU)
1	1008.3
2	951.2
3	733.0
CORE	898.2

OCTOBER 1974 ZION UNIT 2

DATE	AVG. POWER	BURNUP AT END OF DAY	INST. POWER	BORON CONC.	CONTROL BANK D	P/L RODS	TEMP.	PRES.	AVG. AXIAL OFFSET	STATUS	FLUX MAP
OCT 1	59.9	920.0	56.0	994	205	229	553.3	2226	-2.3		
OCT 2	41.3	935.5	68.0	946	203	228	555.6	2227	-2.3		
OCT 3	20.7	943.2		913							
OCT 4	71.7	970.0	70.5	992	217	228	556.1	2228	-1.7		
OCT 5	73.9	997.5	74.0	924	199	228	555.9	2228	-4.1		
OCT 6	27.8	1008.0		848							
OCT 7	73.8	1035.6	74.0	980	218	228	555.0	2230			2-1-27
OCT 8	74.0	1063.3	74.0	910	177	228	556.1	2225	-10.3		
OCT 9	74.0	1091.0	75.0	885	166	228	555.7	2224	-7.3	E	
OCT 10	74.0	1118.6	74.0	888	177	228	556.0	2229	-5.2	E	
OCT 11	72.8	1145.9	74.0	897	183	228	555.4	2224	-5.2		
OCT 12	0.8	1146.2		869							
OCT 13	0.0C	1146.2		1253							
OCT 14	0.0C	1146.2		1230							
OCT 15	0.0C	1146.2		1233							
OCT 16	0.0C	1146.2		1242							
OCT 17	0.0C	1146.2		1239							
OCT 18	0.0C	1146.2		1240							
OCT 19	0.0S	1146.2		1254							
OCT 20	0.0H	1146.2		1240							
OCT 21	42.6	1162.1	20.0	1243	196	228	548.8	2241	-4.2		
OCT 22	31.8	1174.0	44.0	958	179	228	556.1	2234	-2.4		
OCT 23	0.0S	1174.0		1253							
OCT 24	0.0C	1174.0		1289							
OCT 25	0.0C	1174.0		1265							
OCT 26	0.0C	1174.0		1268							
OCT 27	0.0S	1174.0		1262							
OCT 28	0.0H	1174.0		1268							
OCT 29	0.0H	1174.0		1285							
OCT 30	8.5	1177.1		1202							
OCT 31	63.2	1200.8	65.0	1036	196	228	555.3	2229	-2.9		

BURN-UP DATA FOR OCTOBER 1974

FLUX MAP 2-1-27 USED FOR BURN-UP CALCULATIONS

REGION	BURN-UP (MWD/MTU)
1	1351.7
2	1275.1
3	974.5
CORE	1201.2

NOVEMBER 1974 ZION UNIT 2

DATE	AVG. POWER	BURNUP AT END OF DAY	INST. POWER	BORON CONC.	CONTROL BANK D	P/L RODS	TEMP.	PRES.	AVG. AXIAL OFFSET	STATUS	FLUX MAP
NOV 1	73.6	1228.3	73.0	922	202	228	555.4	2229	-3.8		
NOV 2	68.8	1254.0	74.0	883	158	144	556.0	2229	0.1		
NOV 3	73.3	1281.4	74.0	895	210	138	556.2	2229	-3.3		
NOV 4	72.0	1308.4	72.5	944	188	18	556.0	2230	-1.1		
NOV 5	71.9	1335.2	71.0	927	198	228	555.6	2229	-4.5		
NOV 6	72.7	1362.4	72.0	915	198	228	555.4	2230	-2.2	E	
NOV 7	73.6	1389.9	74.0	921	195	228	556.1	2231	-2.2		
NOV 8	76.0	1418.4	74.0	945	197	228	555.9	2231	-3.4		
NOV 9	81.9	1449.0	82.0	914	205	228	557.0	2235	-2.0		
NOV 10	82.0	1479.6	82.0	899	207	228	556.7	2240	-4.2	X	
NOV 11	81.9	1510.3	82.0	893	203	228	557.5	2240	-1.5	E	
NOV 12	82.0	1540.9	82.0	887	203	228	557.2	2239	-2.7	E	
NOV 13	82.0	1571.6	82.0	882	200	228	556.6	2239	-3.1	E	
NOV 14	82.0	1602.2	83.0	882	200	228	557.3	2240	-2.5	X	2-1-29
NOV 15	82.5	1533.1	82.0	876	199	228	557.1	2241	-3.1	E	
NOV 16	83.8	1664.4	83.5	876	204	228	556.6	2241	-1.8		
NOV 17	83.6	1695.7	84.0	881	201	228	557.3	2241	-2.2	E	
NOV 18	83.6	1726.9	84.0	874	204	228	556.9	2242	-1.7	X	
NOV 19	84.1	1758.4	84.0	870	203	228	556.9	2242	-1.9	E	
NOV 20	84.0	1789.8	84.0	872	203	228	557.4	2241	-2.7	E	
NOV 21	76.0	1818.2	80.0	844	226	228	556.9	2242	-5.7		
NOV 22	79.9	1848.1	83.0	877	202	228	557.5	2241	-2.3		
NOV 23	82.7	1879.0	82.0	873	206	228	556.4	2242	-3.4		
NOV 24	83.7	1910.3	83.5	877	200	228	556.8	2240	-3.3		
NOV 25	53.3	1930.2	84.0	873	196	228	557.6	2240	-3.4		
NOV 26	37.7	1944.3	1.0	796	53	228	548.6	2240	-23.6		
NOV 27	78.2	1973.6	82.0	911	198	228	557.1	2239	-3.1		
NOV 28	3.8	1975.0		1034							
NOV 29	0.0C	1975.0		1078							
NOV 30	0.0C	1975.0		1070							

BURN-UP DATA FOR NOVEMBER 1974

FLUX MAP 2-1-29 USED FOR BURN-UP CALCULATIONS

REGION	BURN-UP (MWD/MTU)
1	2228.8
2	2102.0
3	1591.2
CORE	1975.3

DECEMBER 1974 ZION UNIT 2

DATE	AVG. POWER	BURNUP AT END OF DAY	INST. POWER	BORON CONC.	CONTROL BANK D	P/L RODS	TEMP.	PRES.	AVG. AXIAL OFFSET	STATUS	FLUX MAP
DEC 1	0.0C	1975.0		1072							
DEC 2	0.0C	1975.0		1084							
DEC 3	0.0C	1975.0		1087							
DEC 4	0.0C	1975.0		1084							
DEC 5	0.0C	1975.0		1090							
DEC 6	0.0C	1975.0		1089							
DEC 7	0.0C	1975.0		1061							
DEC 8	0.0C	1975.0		1082							
DEC 9	0.0C	1975.0		1054							
DEC 10	0.0C	1975.0		1058							
DEC 11	0.0C	1975.0		1071							
DEC 12	0.0S	1975.0		1087							
DEC 13	0.0H	1975.0		1073							
DEC 14	2.5	1975.9	4.0	1145	2	228	549.4	2225	-17.2		
DEC 15	8.8	1979.2	35.0	1157	178	224	550.9	2223	-3.9		
DEC 16	35.9	1992.6	48.9	1073	183	222	551.0	2227	-4.2		
DEC 17	48.5	2010.8	49.5	966	195	222	553.6	2227	0.5		
DEC 18	48.1	2028.7	49.0	952	188	228	552.6	2227	-3.5	E	
DEC 19	57.1	2050.1	49.0	935	191	228	552.5	2226	-2.6		
DEC 20	80.9	2080.3		891							
DEC 21	83.8	2111.7	84.0	863	205	228	557.0	2237			
DEC 22	83.9	2143.0	84.0	861	204	228	557.8	2237	-2.8		
DEC 23	84.0	2174.5	84.0	848	202	228	557.0	2240	-5.3		
DEC 24	83.9	2205.8	84.0	851	196	228	557.0	2239	-4.0	E	
DEC 25	83.4	2237.0	84.0	842	199	228	557.5	2240	-2.0	X	
DEC 26	83.1	2268.1	83.0	831	196	228	557.2	2240	-2.8		
DEC 27	81.7	2298.6	83.0	855	199	228	556.4	2240	-4.4	X	
DEC 28	29.1	2309.5		767							
DEC 29	82.3	2340.3	83.0	945	195	228	557.1	2239	-1.6		
DEC 30	46.8	2357.8	82.0	864	189	228	556.2	2237	-1.1		
DEC 31	0.0S	2357.8		917							

BURN-UP DATA FOR DECEMBER 1974

FLUX MAP 2-1-29 USED FOR BURN-UP CALCULATIONS

REGION	BURN-UP (MWD/MTU)
1	2662.6
2	2511.0
3	1896.1
CORE	2358.1

JANUARY 1975 ZION UNIT 2

DATE	AVG. POWER	BURNUP AT END OF DAY	INST. POWER	BORON CONC.	CONTROL BANK D	P/L RODS	TEMP.	PRES.	AVG. AXIAL OFFSET	STATUS	FLUX MAP
JAN 1	0.0C	2357.8		1032							
JAN 2	0.0C	2357.8		1047							
JAN 3	0.0C	2357.8		1044							
JAN 4	0.0C	2357.8		1055							
JAN 5	0.0S	2357.8		1062							
JAN 6	0.0S	2357.8		1029							
JAN 7	0.0C	2357.8		1029							
JAN 8	0.0S	2357.8		1058							
JAN 9	0.2	2357.9		1064							
JAN 10	1.2	2358.3	1.0	1152	74	228	548.3	2241	-27.3		
JAN 11	29.5	2369.3	4.0	1184	2	228	547.3	2241	-22.6		
JAN 12	79.6	2399.1	82.5	919	189	228	557.3	2241	-3.4		
JAN 13	63.3	2422.8		860							
JAN 14	51.2	2441.9		900							
JAN 15	50.2	2460.7		924							
JAN 16	65.2	2485.1	50.0	921	182	228	552.7	2240	-3.6		
JAN 17	78.6	2514.4	78.0	866	198	228	556.5	2241	-1.5		
JAN 18	79.0	2544.0	80.0	856	195	228	556.9	2240	-2.8		
JAN 19	78.9	2573.5		841							
JAN 20	79.1	2603.1	79.0	850	196	228	556.7	2241	-2.3	E	
JAN 21	81.6	2633.6	80.0	834	194	228	556.5	2241	-3.5		
JAN 22	83.0	2664.6	83.0	833	196	228	557.0	2240	-2.1		
JAN 23	83.0	2695.6	82.0	828	195	228	556.8	2241	-3.6	E	
JAN 24	83.1	2726.7	83.0	828	197	228	557.1	2241	-2.7	E	
JAN 25	82.7	2757.5	82.0	821	200	228	556.3	2241	-2.6	E	
JAN 26	82.3	2788.4	83.0	832	194	226	556.6	2242	-3.0	E	
JAN 27	82.5	2819.2	82.0	833	195	228	557.4	2239	-3.1	E	
JAN 28	81.9	2849.9	84.0	833	195	228	557.3	2236	-1.9		
JAN 29	79.4	2879.6	82.0	854	187	228	558.0	2234	-3.7		
JAN 30	82.6	2910.4	82.0	844	196	228	557.2	2238	-2.1		
JAN 31	83.6	2941.7	83.0	825	195	228	557.1	2239	-2.3		

BURN-UP DATA FOR JANUARY 1975

FLUX MAP 2-1-29 USED FOR BURN-UP CALCULATIONS

REGION	BURN-UP (MWD/MTU)
1	3324.1
2	3134.6
3	2361.1
CORE	2941.9

FEBRUARY 1975 ZION UNIT 2

DATE	AVG. POWER	BURNUP AT END OF DAY	INST. POWER	BORON CONC.	CONTROL BANK D	P/L RODS	TEMP.	PRES.	AVG. AXIAL OFFSET	STATUS	FLUX MAP
FEB 1	83.7	2973.0	84.0	834	192	228	557.2	2236	-3.4	E	
FEB 2	83.5	3004.2	83.0	827	195	228	556.4	2239	-4.0	E	
FEB 3	81.8	3034.8	83.0	816	193	228	557.3	2238	-3.6	X	
FEB 4	83.6	3056.1	84.0	813	192	228	556.3	2239	-3.7		
FEB 5	83.5	3097.3	83.0	807	194	228					
FEB 6	83.6	3128.5	84.5	806	195	228	557.5	2239	-3.7		
FEB 7	83.4	3159.7	83.0	800	192	228	557.1	2239	-2.5	E	
FEB 8	26.2	3169.5	32.0	805	176	228	552.2	2239	-3.2		
FEB 9	0.0C	3169.5		854							
FEB 10	0.0C	3169.5		871							
FEB 11	0.0C	3169.5		953							
FEB 12	0.0C	3169.5		956							
FEB 13	0.0C	3169.5		954							
FEB 14	0.0S	3169.5		959							
FEB 15	0.6	3169.7		969							
FEB 16	50.2	3188.5	50.0	946	117	228	552.4	2239	-5.3		
FEB 17	41.1	3203.9	70.0	882	188	228	555.7	2239	-2.4		
FEB 18	0.0S	3203.9		951							
FEB 19	0.0C	3203.9		951							
FEB 20	0.0C	3203.9		946							
FEB 21	0.0C	3203.9		938							
FEB 22	0.0S	3203.9		937							
FEB 23	0.0H	3203.9		926							
FEB 24	50.4	3222.7	50.0	1059	98	228	551.9	2233	-2.3		
FEB 25	65.8	3247.3	61.0	864	190	228	554.1	2233	-1.7		
FEB 26	64.5	3271.4	68.0	832	183	228	554.7	2232	-6.3		
FEB 27	76.9	3300.2	68.5	851	182	228	555.7	2233	-2.9		
FEB 28	83.2	3331.3	83.0	823	187	228	557.0	2234	-3.0		

BURN-UP DATA FOR FEBRUARY 1975

FLUX MAP 2-1-29 USED FOR BURN-UP CALCULATIONS

REGION	BURN-UP (MWD/MTU)
1	3765.6
2	3550.8
3	2671.5
CORE	3331.5

MARCH 1975 ZION UNIT 2

DATE	AVG. POWER	BURNUP AT END OF DAY	INST. POWER	BORON CONC.	CONTROL BANK D	P/L RODS	TEMP.	PRES.	AVG. AXIAL OFFSET	STATUS	FLUX MAP
MAR 1	83.4	3362.5	83.0	819	191	228	557.2	2235	-4.0	X	2-1-31
MAR 2	83.4	3393.7	84.0	819	187	228	557.1	2235	-3.1	E	
MAR 3	83.4	3424.8	84.0	833	190	228	557.6	2235	-3.1		
MAR 4	24.4	3434.0		805							
MAR 5	13.0	3438.8	0.3	813	73	228	544.8	2239	-25.0		
MAR 6	66.0	3463.5	73.0	952	179	228	555.8	2239	-6.3		
MAR 7	83.5	3494.7	83.0	825	192	228	556.8	2239	-2.3		
MAR 8	83.5	3526.0	84.0	799	187	228	557.6	2239	-3.3	E	
MAR 9	63.0	3549.5	83.0	793	167	228	557.2	2238	-2.8	E	
MAR 10	82.2	3580.2	82.5	844	187	228	556.5	2238	-3.5		
MAR 11	83.8	3611.5	83.0	799	189	228	557.4	2239	-2.6		
MAR 12	83.6	3642.8	84.0	785	187	228	557.7	2240	-2.3	E	
MAR 13	71.5	3669.6	83.5	788	186	228	557.3	2242	-3.4	E	
MAR 14	8.0	3572.6		847							
MAR 15	5.7	3674.7	2.0	967	28	228	547.4	2243	-21.1		
MAR 16	34.0	3687.4	1.0	1003	48	228	547.5	2243	-27.3		
MAR 17	83.7	3718.7	83.5	859	185	228	557.5	2242	-3.2		
MAR 18	55.2	3739.3	83.0	789	183	228	557.6	2242	-4.1		
MAR 19	43.2	3755.5	80.0	847	187	228	556.8	2243	-3.5		
MAR 20	0.0C	3755.5		904							
MAR 21	0.0C	3755.5		896							
MAR 22	0.0C	3755.5		897							
MAR 23	0.0S	3755.5		923							
MAR 24	13.1	3760.4		946							
MAR 25	75.7	3788.7	84.0	904	193	228	557.0	2236	-2.6		
MAR 26	83.2	3819.8	81.5	798	186	228	557.5	2236	-4.0		
MAR 27	81.6	3850.3	84.0	775	182	228	557.4	2240	-3.5		
MAR 28	83.0	3881.3	84.0	781	184	228	556.9	2239	-3.6		
MAR 29	83.3	3912.5		793							
MAR 30	64.5	3936.6	84.0	794	185	228	557.6	2239	-2.5		
MAR 31	79.1	3965.2	84.0	833	182	228	557.4	2240	-4.6		

BURN-UP DATA FOR MARCH 1975

FLUX MAP 2-1-31 USED FOR BURN-UP CALCULATIONS

REGION	BURN-UP (MWD/MTU)
1	4478.3
2	4243.6
3	3165.6
CORE	3965.1

APRIL 1975 ZION UNIT 2

DATE	AVG. POWER	BURNUP AT END OF DAY	INST. POWER	BORON CONC.	CONTROL BANK D	P/L RODS	TEMP.	PRES.	AVG. AXIAL OFFSET	STATUS	FLUX MAP
APR 1	53.1	3986.0	84.0	789	187	228	556.7	2240	-2.7		
APR 2	72.9	4013.3	84.0	849	190	228	557.5	2241	-5.0		
APR 3	84.6	4044.9	85.0	803	188	228	557.4	2240	-3.0		
APR 4	84.9	4076.7	85.0	779	190	228	557.4	2242	-2.6		
APR 5	75.2	4104.8	85.0	779	187	228	557.2	2244	-3.1	E	
APR 6	0.0H	4104.8		795							
APR 7	0.0H	4104.8		795							
APR 8	0.0S	4104.8		1167							
APR 9	0.0C	4104.8		1278							
APR 10	0.0C	4104.8		1268							
APR 11	0.0C	4104.8		1244							
APR 12	0.0C	4104.8		1243							
APR 13	0.0C	4104.8		1030							
APR 14	0.0C	4104.8		1060							
APR 15	6.6	4107.3		1065							
APR 16	71.3	4133.9	50.0	972	192	228	553.0	2237	0.5		
APR 17	84.3	4165.4	85.0	786	190	228	557.4	2237	-2.6		
APR 18	84.5	4197.0	85.0	770	192	228	557.6	2237	-3.4		
APR 19	85.0	4228.8	85.0	765	193	228	557.3	2236	-2.7		2-1-32
APR 20	84.8	4260.5	85.0	765	191	228	557.9	2236	-2.1	S	
APR 21	84.6	4292.1	85.0	770	190	228	557.6	2237	-3.3	S	
APR 22	85.0	4323.9	85.0	750	193	228	558.0	2237	-2.0	S	
APR 23	84.5	4355.5	84.5	750	197	228	558.2	2237	-1.5		
APR 24	84.9	4387.3	85.0	779	198	228	556.8	2236	-1.4		
APR 25	85.0	4419.0	85.0	759	194	228	557.5	2238	-3.2	X	
APR 26	85.0	4450.8	85.0	756	195	228	558.4	2237	-2.3	X	
APR 27	85.0	4482.6	85.0	759	194	228	558.6	2237	-2.0	E	
APR 30	84.3	4514.1	85.0	760	197	228	557.5	2237	-2.6	X	
APR 29	84.3	4545.7	85.0	754	193	228	558.4	2237	-1.5		
APR 30	84.3	4577.2	85.0	760	197	228	557.5	2237	-2.6	X	

BURN-UP DATA FOR APRIL 1975

FLUX MAP 2-1-32 USED FOR BURN-UP CALCULATIONS

REGION	BURN-UP (MWD/MTU)
1	5165.9
2	4911.2
3	3641.7
CORE	4575.8

MAY 1975 ZION UNIT 2

DATE	AVG. POWER	BURNUP AT END OF DAY	INST. POWER	BORON CONC.	CONTROL BANK D	P/L RODS	TEMP.	PRES.	AVG. AXIAL OFFSET	STATUS	FLUX MAP
MAY 1	84.6	4608.8	84.5	752	195	228	558.5	2236	-2.5		
MAY 2	70.6	4635.2	85.0	761	192	228	557.4	2236	-2.9		
MAY 3	79.6	4665.0	84.0	783	196	228	557.8	2236	-1.5		
MAY 4	85.0	4696.7	85.0	753	192	228	558.3	2236	-2.3		
MAY 5	84.8	4729.5	85.0	739	190	228	558.2	2236	-1.5	X	
MAY 6	84.8	4760.2	84.5	735	195	228	558.0	2236	-1.7	E	
MAY 7	84.3	4791.7	85.0	748	195	228	558.3	2237	-1.3	X	
MAY 8	84.7	4823.3	84.5	726	191	228	559.1	2236	-3.2		
MAY 9	78.2	4852.6	85.0	714	191	228	557.7	2236	-3.8		
MAY 10	84.5	4884.2	85.0	728	195	228	556.9	2235	-1.8		
MAY 11	84.2	4915.7	84.0	729	193	228	557.1	2235	-2.0		
MAY 12	84.3	4947.2	85.0	720	193	228	557.5	2236	-2.4	E	
MAY 13	76.0	4975.6	77.0	730	134	228	556.5	2238	-5.0		
MAY 14	84.9	5007.3	85.0	733	195	228	557.5	2237	-0.7		
MAY 15	84.7	5039.0	85.0	712	192	228	557.6	2236	-2.9	X	
MAY 16	77.4	5068.0	79.0	719	191	228	557.6	2238	-0.9		
MAY 17	84.9	5099.7	85.0	724	193	228	557.1	2238	-2.1		
MAY 18	84.5	5131.3	85.0	714	191	228	557.3	2238	-1.4		
MAY 19	79.4	5161.0	85.0	713	187	228	558.0	2237	-1.2		
MAY 20	76.1	5189.4	70.0	730	188	228	555.2	2238	-3.6		
MAY 21	84.7	5221.1	85.0	719	130	228	557.0	2237	-1.8		
MAY 22	85.0	5252.9	85.0	707	191	228	556.6	2237	-2.0		2-1-33
MAY 23	84.8	5284.6	85.0	708	190	228	557.9	2237	-2.2	E	
MAY 24	80.0	5314.5		705						P	
MAY 25	84.9	5346.2	84.5	718	139	228	556.1	2236	-3.2		
MAY 26	84.8	5378.0	85.0	709	191	228	556.5	2234	-2.8		
MAY 27	85.0	5409.7	85.0	705	189	228	557.9	2237	-2.9	X	
MAY 28	85.0	5441.5	85.0	723	189	228	557.1	2237	-2.1	X	
MAY 29	83.8	5472.8	85.0	685	191	228	556.8	2237	-2.2	X	
MAY 30	85.0	5504.6	85.0	687	188	228	557.3	2238	-2.2		
MAY 31	85.0	5535.4	85.0	697	188	228	557.3	2239	-2.4		

BURN-UP DATA FOR MAY 1975

FLUX MAP 2-1-32 USED FOR BURN-UP CALCULATIONS

REGION	BURN-UP (MWD/MTU)
1	6247.0
2	5960.9
3	4389.4
CORE	5535.8

JUNE 1975 ZION UNIT 2

DATE	AVG. POWER	BURNUP AT END OF DAY	INST. POWER	BORON CONC.	CONTROL BANK D	P/L RODS	TEMP.	PRES.	AVG. AXIAL OFFSET	STATUS	FLUX MAP
JUN 1	84.9	5568.2	85.0	698	190	228	557.3	2238	-2.2	X	
JUN 2	84.9	5599.9	85.0	698	191	228	558.0	2239	-1.1	X	
JUN 3	85.0	5631.7	85.0	701	189	228	557.1	2239	-1.8	X	
JUN 4	82.6	5662.6		684						P	
JUN 5	79.1	5692.1	85.0	688	189	228	557.0	2238	-1.7		
JUN 6	0.0H	5692.1		668							
JUN 7	0.0H	5692.1		1017							
JUN 8	0.0S	5692.1		1013							
JUN 9	0.0C	5692.1		1008							
JUN 10	0.0C	5692.1		998							
JUN 11	0.0C	5692.1		1014							
JUN 12	0.0C	5692.1		985							
JUN 13	0.0C	5692.1		978							
JUN 14	0.0C	5692.1		977							
JUN 15	0.0C	5692.1		973							
JUN 16	0.0C	5692.1		970							
JUN 17	0.0C	5692.1		988							
JUN 18	0.0C	5692.1		1020							
JUN 19	0.0C	5692.1		1022							
JUN 20	0.0C	5692.1		1037							
JUN 21	0.0C	5692.1		1011							
JUN 22	0.0C	5692.1		1029							
JUN 23	0.0C	5692.1		1021							
JUN 24	0.0C	5692.1		1005							
JUN 25	0.0C	5692.1		1056							
JUN 26	0.0C	5692.1		1037							
JUN 27	0.0C	5692.1		1029							
JUN 28	0.0C	5692.1		1044							
JUN 29	0.0S	5692.1		1045							
JUN 30	0.8	5692.4	1.0	1048	130	228	548.2	2237	-2.3		

BURN-UP DATA FOR JUNE 1975

FLUX MAP 2-1-32 USED FOR BURN-UP CALCULATIONS

REGION	BURN-UP (MWD/MTU)
1	6422.7
2	6131.5
3	4511.0
CORE	5691.9

JULY 1975 ZION UNIT 2

DATE	AVG. POWER	BURNUP AT END OF DAY	INST. POWER	BORON CONC.	CONTROL BANK D	P/L RODS	TEMP.	PRES.	AVG. AXIAL OFFSET	STATUS	FLUX MAP
JUL 1	51.0	5711.5	50.0	957	178	228	553.1	2236	-1.4		
JUL 2	81.7	5742.1	85.0	746	196	228	557.6	2235	-1.1		
JUL 3	82.2	5772.8	84.5	698	195	228	557.7	2235	-2.1		
JUL 4	84.9	5804.5	85.0	700	198	228	557.9	2235	-0.3		
JUL 5	83.6	5835.8	80.0	687	194	228	557.8	2234	-1.6		
JUL 6	84.6	5867.4	85.0	690	193	228	557.3	2234	-1.6		
JUL 7	84.3	5898.9	84.5	684	193	228	557.5	2235	-2.5	X	
JUL 8	84.5	5930.5	85.0	678	193	228	557.8	2235	-1.8	E	
JUL 9	84.9	5962.3	85.0	683	192	228	557.9	2237	-1.6	E	
JUL 10	84.8	5994.0	85.0	684	197	228	557.9	2236	-0.9		
JUL 11	85.0	6025.8	85.0	676	191	228	557.1	2236	-2.2	E	
JUL 12	84.7	6057.4	85.0	680	195	228	556.3	2236	-0.6	X	
JUL 13	82.5	6088.3	85.0	677	192	228	557.6	2236	-1.8		
JUL 14	72.6	6115.4	81.0	679	191	228	557.5	2236	-4.4		
JUL 15	84.3	6147.0	84.0	681	191	228	558.3	2237	-0.4		
JUL 16	85.0	6178.7	85.0	664	194	228	558.0	2237	-1.7	S	
JUL 17	85.0	6210.5	85.0	661	192	228	558.4	2234	-0.9	X	
JUL 18	85.0	6242.3	85.0	652	192	228	557.8	2235	-0.7	X	2-1-34
JUL 19	84.8	6274.0	84.0	669	192	228	558.0	2235	-2.2	X	
JUL 20	84.8	6305.7	85.0	644	191	228	558.3	2235	-0.2	X	
JUL 21	84.9	6337.5	85.0	657	192	228	557.8	2234	-1.2	E	
JUL 22	57.9	6359.1	84.0	641	194	228	557.8	2234	-1.3	E	
JUL 23	47.3	6376.8		556							
JUL 24	85.0	6408.5	85.0	678	192	228	557.7	2236	-1.6		
JUL 25	84.7	6440.2	85.0	643	193	228	558.3	2236	-1.2		
JUL 26	84.7	6471.9	84.0	652	192	228	557.5	2236	-0.7	X	
JUL 27	85.0	6503.7	85.0	634	192	228	557.8	2241	-1.3	E	
JUL 28	85.0	6535.5	85.0	637	194	228	558.5	2240	-1.0	S	
JUL 29	85.0	6567.3	85.0	629	193	228	558.3	2242	-1.5	E	
JUL 30	85.0	6599.0	85.0	651	195	228	557.8	2243	-1.2	E	
JUL 31	85.0	6630.8	85.0	629	195	228	557.9	2242	-0.4	X	

BURN-UP DATA FOR JULY 1975

FLUX MAP 2-1-34 USED FOR BURN-UP CALCULATIONS

REGION	BURN-UP (MWD/MTU)
1	7459.5
2	7179.7
3	5240.6
CORE	6630.3

AUGUST 1975 ZION UNIT 2

DATE	AVG. POWER	BURNUP AT END OF DAY	INST. POWER	BORON CONC.	CONTROL BANK D	P/L RODS	TEMP.	PRES.	AVG. AXIAL OFFSET	STATUS	FLUX MAP
AUG 1	85.0	6662.6	85.0	645	192	228	557.8	2242	-1.2	X	
AUG 2	85.0	6694.4	85.0	649	193	228	556.7	2243	-1.6	X	
AUG 3	85.0	6726.2	85.0	644	191	228	557.2	2242	-2.3		
AUG 4	84.9	6757.9	85.0	637	191	228	556.8	2242	-1.4	X	
AUG 5	84.9	6789.6	85.0	623	191	228	556.9	2242	-3.3	X	
AUG 6	84.5	6821.2	85.0	632	194	228	557.7	2241	-0.9		
AUG 7	83.5	6852.5	85.0	632	189	228	557.9	2241	-1.7		
AUG 8	2.0	6853.2		604							
AUG 9	12.6	6857.9		568							
AUG 10	84.0	6889.3	85.0	731	190	228	557.2	2239	-0.0		
AUG 11	83.8	6920.7	85.0	636	189	228	557.5	2239	-3.5		
AUG 12	84.9	6952.4	85.0	627	194	228	557.2	2238	-0.6		
AUG 13	84.9	6984.2	85.0	613	193	228	557.2	2235	-1.3	E	
AUG 14	85.0	7015.9	85.0	604	192	228	557.1	2240	-1.3	X	
AUG 15	85.0	7047.7	85.0	618	190	228	557.6	2240	-1.0	S	
AUG 16	84.9	7079.5	85.0	615	194	228	557.1	2240	-0.7	S	
AUG 17	84.7	7111.1	85.0	586	187	228	558.3	2240	-3.3		
AUG 18	84.9	7142.9	85.0	620	191	228	557.2	2240	-2.2		
AUG 19	84.5	7174.5	84.0	616	193	228	557.8	2240	-1.3	S	
AUG 20	82.5	7205.3	85.0	623	192	228	557.8	2240	-1.6		
AUG 21	85.0	7237.1	85.0	601	195	228					
AUG 22	84.7	7268.8	84.5	585	193	228	557.1	2238	-1.8	X	2-1-35
AUG 23	84.8	7300.5	85.0	597	194	228	557.0	2238	-1.0	X	
AUG 24	84.8	7332.2	85.0	589	195	228	556.8	2238	-0.5	X	
AUG 25	84.8	7363.9	85.0	601	195	228	557.3	2238	-1.1	X	
AUG 26	84.6	7395.5	85.0	589	194	228	557.3	2239	-1.7	X	
AUG 27	84.0	7426.9	84.0	592	191	228	556.9	2239	-1.9	E	
AUG 28	84.3	7458.4	85.0	594	189	228	557.9	2238	-1.2		
AUG 29	84.8	7490.2	85.0	585	190	228	557.3	2237	-1.8		
AUG 30	23.5	7498.9		567							
AUG 31	0.0S	7498.9		964							

BURN-UP DATA FOR AUGUST 1975

FLUX MAP 2-1-35 USED FOR BURN-UP CALCULATIONS

REGION	BURN-UP (MWD/MTU)
1	8416.0
2	8146.8
3	5920.4
CORE	7498.4

SEPTEMBER 1975 ZION UNIT 2

DATE	AVG. POWER	BURNUP AT END OF DAY	INST. POWER	BORON CONC.	CONTROL BANK D	P/L RODS	TEMP.	PRES.	AVG. AXIAL OFFSET	STATUS	FLUX MAP
SEP 1	0.0C	7498.9		998							
SEP 2	0.0C	7498.9		974							
SEP 3	0.0C	7498.9		1129							
SEP 4	0.0C	7498.9		1192							
SEP 5	0.0C	7498.9		1176							
SEP 6	0.0C	7498.9		1176							
SEP 7	0.0C	7498.9		1182							
SEP 8	0.0C	7498.9		1173							
SEP 9	0.0C	7498.9		1129							
SEP 10	0.0C	7498.9		1128							
SEP 11	0.0C	7498.9		1124							
SEP 12	0.0C	7498.9		1115							
SEP 13	0.0C	7498.9		1115							
SEP 14	0.0C	7498.9		1126							
SEP 15	0.0C	7498.9		929							
SEP 16	0.0C	7498.9		948							
SEP 17	0.0C	7498.9		947							
SEP 18	0.0C	7498.9		955							
SEP 19	0.0C	7498.9		951							
SEP 20	0.0S	7498.9		949							
SEP 21	0.0H	7498.9		1000							
SEP 22	0.2	7499.0		1000							
SEP 23	12.9	7503.8		997							
SEP 24	82.6	7534.7		711							
SEP 25	82.2	7565.5	82.0	625	196	228					
SEP 26	82.0	7596.1	82.0	603	192	228					
SEP 27	82.0	7626.8	82.0	601	192	228				P	
SEP 28	81.2	7657.1	81.0	606	191	228				P	
SEP 29	81.7	7687.7		603							
SEP 30	82.0	7718.3	82.0	603	192	228					

BURN-UP DATA FOR SEPTEMBER 1975

FLUX MAP 2-1-36 USED FOR BURN-UP CALCULATIONS

REGION	BURN-UP (MWD/MTU)
1	8658.0
2	8391.3
3	6091.8
CORE	7717.8

OCTOBER 1975 ZION UNIT 2

DATE	AVG. POWER	BURNUP AT END OF DAY	INST. POWER	BORON CONC.	CONTROL BANK D	P/L RODS	TEMP.	PRES.	AVG. AXIAL OFFSET	STATUS	FLUX MAP
OCT 1	81.9	7749.0	82.5	586	189	228	558.7	2229	-1.3	X	
OCT 2	79.7	7778.8	67.0	60[illegible]	187	228	555.4	2230	-1.2		
OCT 3	81.8	7809.3	82.0	585	186	228	558.7	2229	-1.8		
OCT 4	81.9	7840.0	82.0	574	191	228	557.2	2228	-1.1		
OCT 5	80.6	7870.1	82.0	596	193	228	557.5	2228	-0.6	E	
OCT 6	82.3	7900.9	82.0	591	190	228	556.8	2227	-0.5		
OCT 7	83.7	7932.2	82.0	575	189	228	558.6	2225	-2.4		
OCT 8	81.1	7962.5	82.0	585	188	228					
OCT 9	57.4	7984.0	82.0	569	191	228	557.4	2228	-2.5		
OCT 10	0.0H	7984.0		856							
OCT 11	0.0H	7984.0		884							
OCT 12	54.7	8004.4	49.0	823	91	228	552.6	2229	-0.9		
OCT 13	82.4	8035.2	82.0	693	110	228	557.7	2229	0.0		
OCT 14	82.8	8066.2	83.0	609	192	228	557.0	2231	-0.6		
OCT 15	82.8	8097.1	83.0	552	191	228	557.4	2232	-1.5		
OCT 16	82.8	8128.1	83.0	559	187	228	558.4	2233	-2.1		
OCT 17	82.6	8159.0	82.0	564	188	228	557.6	2234	-1.1		
OCT 18	76.9	8187.7	82.0	546	195	228	558.4	2237	1.1		2-1-37
OCT 19	66.8	8212.7	82.0	563	189	228	558.8	2238	-2.3		
OCT 20	55.6	8233.5	49.0	593	182	228	555.0	2238	1.0		
OCT 21	79.4	8263.2	81.0	590	187	228	559.1	2236	-0.5		
OCT 22	62.9	8286.7	82.0	576	190	228	556.8	2240	-0.6		
OCT 23	77.1	8315.5	82.0	604	194	228	557.7	2240	-1.5		
OCT 24	83.0	8346.6	82.0	572	205	228	557.3	2240	-1.2		
OCT 25	82.0	8377.2	82.0	567	191	228					
OCT 26	82.1D	8407.9	82.0	558	191	228	557.3	2243	0.5	E	
OCT 27	82.6	8438.8	82.0	557	193	228	557.1	2243	0.2		
OCT 28	82.3	8469.6	82.0	554	189	228	557.5	2244	-1.3		
OCT 29	80.9	8499.8	82.5	573	190	228	557.7	2244	-0.5		
OCT 30	81.7	8530.4	82.0	564	188	228	556.9	2243	-1.0		
OCT 31	82.2	8561.1	82.0	552	189	228	557.9	2243	-0.6		

BURN-UP DATA FOR OCTOBER 1975

FLUX MAP 2-1-37 USED FOR BURN-UP CALCULATIONS

REGION	BURN-UP (MWD/MTU)
1	9590.5
2	9337.7
3	6745.8
CORE	8562.3

NOVEMBER 1975 ZION UNIT 2

DATE	AVG. POWER	BURNUP AT END OF DAY	INST. POWER	BORON CONC.	CONTROL BANK D	P/L RODS	TEMP.	PRES.	AVG. AXIAL OFFSET	STATUS	FLUX MAP
NOV 1	80.7	8591.3	82.0	546	193	228	556.7	2242	-0.1	S	
NOV 2	60.0	8613.7	61.0	479	27	228	552.7	2241	-1.3		
NOV 3	82.3	8644.5	83.0	558	192	228	556.3	2241	0.2		
NOV 4	82.5	8675.3	82.0	543	193	228	556.7	2242	-0.1	E	
NOV 5	83.0	8706.4	83.5	536	190	228	557.6	2243	-1.4		
NOV 6	82.1	8737.1	82.5	533	190	228	861.6	3469	-1.1		
NOV 7	82.0	8767.7		525							
NOV 8	82.0	8798.4	82.0	546	192	228	557.1	2244	0.6	X	
NOV 9	81.9	8829.0	82.0	531	193	228	556.7	2244	-0.9	X	
NOV 10	82.0	8859.7	82.5	527	192	228	557.3	2244	-0.3	X	
NOV 11	82.1	8890.4	82.0	533	195	228	557.2	2244	1.2	X	
NOV 12	82.9	8921.4	82.5	538	197	228	557.4	2244	1.8	E	
NOV 13	80.9	8951.6	81.0	537	199	228	557.4	2245	2.2		
NOV 14	83.1	8982.7	81.0	530	196	228	557.4	2245	1.4		
NOV 15	83.0	9013.7	82.0	525	200	228	557.3	2245	0.3		
NOV 16	65.1	9038.1	42.0	514	175	228	551.8	2244	-2.2		
NOV 17	82.5	9068.9	81.0	539	197	228	556.7	2243	2.3		
NOV 18	79.1	9098.5	79.0	531	198	228	555.1	2244	0.3		2-1-38
NOV 19	32.1	9110.5	59.0	510	185	228	552.8	2245	-6.5		
NOV 20	82.2	9141.2	82.5	577	194	228	556.7	2244	2.9		
NOV 21	80.6	9171.4	84.0	536	201	228	557.5	2245	2.5		
NOV 22	65.0	9195.7	50.0	500	199	228	552.0	2243	-6.6		
NOV 23	66.3	9220.4	59.0	512	192	228	553.2	2244	-2.2		
NOV 24	67.5	9245.7	60.0	524	175	228	554.2	2244	-5.1		2-1-42
NOV 25	80.1	9275.6	81.0	542	201	228	557.0	2244	1.4		
NOV 26	84.9	9307.4	85.0	523	207	228	557.4	2244	2.9		
NOV 27	84.9	9339.1	85.0	516	206	228	557.8	2243	1.8		
NOV 28	84.3	9370.6	85.0	515	204	228	557.1	2243	1.0	E	
NOV 29	71.7	9397.5	85.0	482	200	228	556.8	2243	-2.6		
NOV 30	70.4	9423.8	77.0	498	206	228	557.2	2242	-2.1		

BURN-UP DATA FOR NOVEMBER 1975

FLUX MAP 2-1-38 USED FOR BURN-UP CALCULATIONS

REGION	BURN-UP (MWD/MTU)
1	10539.4
2	10301.9
3	7418.1
CORE	9424.3

DECEMBER 1975 ZION UNIT 2

DATE	AVG. POWER	BURNUP AT END OF DAY	INST. POWER	BORON CONC.	CONTROL BANK D	P/L RODS	TEMP.	PRES.	AVG. AXIAL OFFSET	STATUS	FLUX MAP
DEC 1	71.3	9450.4	55.0	488	184	228	551.8	2242	-4.1		
DEC 2	83.5	9481.7	83.0	526	199	228	557.9	2242	0.4		
DEC 3	82.6	9512.5	82.0	500	201	228	557.3	2242	1.3		
DEC 4	82.3	9543.3	82.0	495	198	228	557.5	2242	0.4		
DEC 5	82.1	9574.0	82.0	497	201	228	557.1	2243	0.5		
DEC 6	83.2	9605.1	83.0	497	198	228	557.0	2242	0.2		
DEC 7	81.8	9635.7	82.0	497	198	228	557.5	2242	1.1		
DEC 8	81.6	9666.2	82.0	500	198	228	557.0	2242	2.2		
DEC 9	80.3	9696.2	81.5	494	196	228	556.8	2241	-2.1		
DEC 10	82.0	9726.9	81.5	489	200	228	558.0	2242	1.6		
DEC 11	82.0	9757.6	82.0	482	205	228	557.9	2244	3.0		
DEC 12	82.0	9788.2	82.0	490	203	228	557.6	2244	1.0	X	
DEC 13	82.1	9818.9	82.0	480	202	228	557.0	2244	2.5	E	
DEC 14	73.0	9846.2	47.0	480	187	228	550.4	2235	6.3		
DEC 15	82.1	9876.9	82.0	486	203	228	557.3	2235	2.7		
DEC 16	82.0	9907.6	82.0	476	205	228	557.3	2236	2.5	E	
DEC 17	82.0	9938.2	82.0	490	203	228	557.5	2237	2.2	X	
DEC 18	82.8	9969.2	82.5	478	202	228	557.8	2238	2.9	X	
DEC 19	82.0	9999.8	82.0	461	202	228	557.6	2237	2.5		
DEC 20	76.7	10028.5	82.0	472	203	228	557.1	2238	2.0		
DEC 21	82.0	10059.2	82.0	480	201	228	557.9	2238	-0.0		
DEC 22	83.1	10090.3	83.0	473	205	228	556.8	2237	2.1		
DEC 23	82.1	10120.9	82.0	464	201	228	557.0	2237	0.5		
DEC 24	66.7	10145.9	66.5	463	196	228	554.6	2237	2.5		
DEC 25	62.7	10169.3	63.0	486	184	228	555.3	2237	-0.3		
DEC 26	59.8	10191.7	63.0	490	184	228	554.4	2237	-0.3		
DEC 27	18.3	10198.5		500							
DEC 28	59.9	10220.9	60.0	528	187	228	554.3	2237	2.7		
DEC 29	50.1	10239.7	60.0	524	194	228	553.5	2237	3.4		
DEC 30	0.0S	10239.7		472							
DEC 31	32.0	10251.6		603							

BURN-UP DATA FOR DECEMBER 1975

FLUX MAP 2-1-42 USED FOR BURN-UP CALCULATIONS

REGION	BURN-UP (MWD/MTU)
1	11442.3
2	11239.4
3	8060.7
CORE	10252.1

JANUARY 1976 ZION UNIT 2

DATE	AVG. POWER	BURNUP AT END OF DAY	INST. POWER	BORON CONC.	CONTROL BANK D	P/L RODS	TEMP.	PRES.	AVG. AXIAL OFFSET	STATUS	FLUX MAP
JAN 1	0.0S	10251.6		602							
JAN 2	0.0S	10251.6		568							
JAN 3	0.0S	10251.5		599							
JAN 4	0.0S	10251.6		586							
JAN 5	35.3	10264.8	2.0	790	3	228	549.1	2240	-9.1		
JAN 6	74.3	10292.6	79.0	528	189	228	557.0	2238	-1.4		
JAN 7	76.6	10321.2	81.0	484	194	228	557.3	2237	-2.1		
JAN 8	73.8	10348.8	77.0	480	195	228	557.3	2238	-1.3		
JAN 9	73.6	10376.4	73.5	474	194	228	556.6	2238	0.2		2-1-47
JAN 10	74.0	10404.0	75.0	479	197	228	556.1	2238	2.9		
JAN 11	75.0	10432.1	76.0	485	200	228	555.8	2237	2.9		
JAN 12	80.9	10462.3	81.5	483	212	228	557.0	2237	1.9		
JAN 13	82.2	10493.1	82.5	472	204	228	557.1	2237	2.7		
JAN 14	82.2	10523.8	81.0	456	200	228	557.5	2237	3.0		
JAN 15	82.1	10554.5	82.0	452	201	228	557.9	2245	1.3		
JAN 16	72.7	10581.7	82.0	448	202	228	556.5	2245	1.6		
JAN 17	0.0S	10581.7		631							
JAN 18	0.0C	10581.7		752							
JAN 19	0.0C	10581.7		763							
JAN 20	0.0C	10581.7		785							
JAN 21	0.0C	10581.7		1592							
JAN 22	0.0C	10581.7		1221							
JAN 23	0.0C	10581.7		1197							
JAN 24	0.0C	10581.7		1175							
JAN 25	0.0C	10581.7		1524							
JAN 26	0.0C	10581.7		1528							
JAN 27	0.0C	10581.7		1374							
JAN 28	0.0C	10581.7		1363							
JAN 29	0.0C	10581.7		1379							
JAN 30	0.0C	10581.7		1359							
JAN 31	0.0C	10581.7		1314							

BURN-UP DATA FOR JANUARY 1976

FLUX MAP 2-1-47 USED FOR BURN-UP CALCULATIONS

REGION	BURN-UP (MWD/MTU)
1	11802.1
2	11613.5
3	8317.1
CORE	10582.3

FEBRUARY 1976 ZION UNIT 2

DATE	AVG. POWER	BURNUP AT END OF DAY	INST. POWER	BORON CONC.	CONTROL BANK D	P/L RODS	TEMP.	PRES.	AVG. AXIAL OFFSET	STATUS	FLUX MAP
FEB 1	0.0C	10581.7									
FEB 2	0.0C	10581.7									
FEB 3	0.0C	10581.7									
FEB 4	0.0C	10581.7									
FEB 5	0.0C	10581.7									
FEB 6	0.0C	10581.7									
FEB 7	0.0C	10581.7									
FEB 8	0.0C	10581.7									
FEB 9	0.0C	10581.7									
FEB 10	0.0C	10581.7									
FEB 11	0.0C	10581.7									
FEB 12	0.0C	10581.7									
FEB 13	0.0C	10581.7									
FEB 14	0.0S	10581.7									
FEB 15	0.5	10581.9		1417							
FEB 16	59.9	10604.3	52.0	718	56	228	553.0	2239	4.8		
FEB 17	84.4	10635.8	85.0	526	215	228	557.7	2239	2.9		
FEB 18	63.8	10659.7	53.0	469	205	228	552.4	2235	3.1		
FEB 19	80.5	10689.8	82.0	529	212	228	557.2	2235	2.2		
FEB 20	84.9	10721.5	85.0	440	216	228	557.5	2235	1.4		
FEB 21	84.8	10753.2	85.0	473	216	228	558.0	2235	2.8	E	
FEB 22	84.2	10784.7	84.0	442	216	228	557.8	2236	4.4	X	
FEB 23	84.6	10816.3	84.0	434	211	228	557.7	2235	0.4	X	
FEB 24	84.7	10848.0	85.0	438	214	228	558.1	2235	1.6	X	
FEB 25	84.2	10879.5	84.0	441	216	228	557.3	2235	4.2	X	
FEB 26	84.6	10911.1	85.0	429	212	228	557.5	2235	2.3	E	
FEB 27	84.0	10942.5	84.0	427	212	228	557.1	2235	2.6	X	
FEB 28	84.0	10973.9	84.0	426	217	228	557.7	2235	1.9	X	
FEB 29	84.2	11005.4	84.0	426	216	228	556.9	2235	1.8	X	

BURN-UP DATA FOR FEBRUARY 1976

FLUX MAP 2-1-48 USED FOR BURN-UP CALCULATIONS

REGION	BURN-UP (MWD/MTU)
1	12257.0
2	12096.8
3	8649.6
CORE	11005.8

MARCH 1976 ZION UNIT 2

DATE	AVG. POWER	BURNUP AT END OF DAY	INST. POWER	BORON CONC.	CONTROL BANK D	P/L RODS	TEMP.	PRES.	AVG. AXIAL OFFSET	STATUS	FLUX MAP
MAR 1	84.0	11036.8	84.0	425	210	228	557.8	2235	1.6	X	
MAR 2	84.3	11068.3	85.0	423	214	228	558.2	2234	2.7	X	
MAR 3	84.7	11100.0	85.0	410	209	228	557.9	2235	2.4	X	
MAR 4	84.5	11131.6	85.0	416	213	228	557.3	2235	1.0	X	2-1-48
MAR 5	84.5	11163.2	84.5	405	218	228				X	
MAR 6	84.7	11194.9	85.0	414	218	228	558.3	2235	2.0	E	
MAR 7	82.4	11225.7	84.0	421	220	228	556.0	2235	3.2		
MAR 8	84.0	11257.1	84.5	415	213	228	557.8	2235	3.2		
MAR 9	83.9	11288.5	83.0	406	213	228	558.1	2229	2.7		
MAR 10	84.1	11319.9	84.0	403	214	228	558.0	2230	2.6	X	
MAR 11	83.8	11351.2	84.0	398	211	228	557.9	2230	1.2	X	
MAR 12	84.0	11382.6	84.0	393	215	228	558.3	2230	1.0	X	
MAR 13	84.9	11414.4	85.0	416	218	228	558.1	2230	-0.2	X	
MAR 14	84.4	11445.9	85.0	397	215	228	557.9	2229	1.0	X	
MAR 15	84.6	11477.6	85.0	387	218	228	557.6	2230	1.1	X	
MAR 16	74.7	11505.5	75.0	397	211	228	556.4	2230	2.7		
MAR 17	84.8	11537.2	89.0	376	210	228	559.1	2230	-0.2		
MAR 18	89.4	11570.6	89.0	374	211	228	558.1	2230	2.8		
MAR 19	89.9	11604.2	89.0	378	209	228	557.5	2232	0.5	E	
MAR 20	89.4	11637.7		383						P	
MAR 21	85.0	11669.5		377							
MAR 22	86.3	11701.7	84.0	404	206	228	557.5	2234	1.3		
MAR 23	91.5	11735.9	90.0	378	210	228	558.0	2234	2.0		2-1-51
MAR 24	89.3	11769.3	94.5	366	218	228	559.0	2234	-0.2		
MAR 25	84.8	11801.0	84.0	368	206	228	558.0	2234	0.9		
MAR 26	84.9	11832.8	85.0	373	203	228	557.5	2234	2.1	E	
MAR 27	84.5	11864.4	84.5	375	206	228	558.0	2233	2.8	E	
MAR 28	85.0	11896.2	85.0	376	208	228	558.1	2234	1.6	X	
MAR 29	85.0	11927.9	85.0	372	203	228	558.0	2233	0.3	X	
MAR 30	84.9	11959.7	85.0	388	205	228				X	
MAR 31	84.8	11991.4	84.5	363	204	228	557.5	2233	0.9	E	

BURN-UP DATA FOR MARCH 1976

FLUX MAP 2-1-51 USED FOR BURN-UP CALCULATIONS

REGION	BURN-UP (MWD/MTU)
1	13314.1
2	13223.2
3	9423.9
CORE	11991.8

APRIL 1976 ZION UNIT 2

DATE	AVG. POWER	BURNUP AT END OF DAY	INST. POWER	BORON CONC.	CONTROL BANK D	P/L RODS	TEMP.	PRES.	AVG. AXIAL OFFSET	STATUS	FLUX MAP
APR 1	28.3	12002.0	84.0	371	208	228	557.4	2233	1.8	E	
APR 2	0.0S	12002.0		667							
APR 3	0.0S	12002.0		695							
APR 4	0.0S	12002.0		699							
APR 5	0.0S	12002.0		727							
APR 6	0.0S	12002.0		717							
APR 7	0.0S	12002.0		692							
APR 8	0.0S	12002.0		694							
APR 9	0.0S	12002.0		698							
APR 10	0.0S	12002.0		692							
APR 11	0.0S	12002.0		696							
APR 12	0.7	12002.2	1.0	643	47	228	543.1	2230	12.6		
APR 13	0.0	12002.2		756							
APR 14	0.0C	12002.2		720							
APR 15	0.0C	12002.2		758							
APR 16	0.0C	12002.2		707							
APR 17	0.0C	12002.2		713							
APR 18	0.0C	12002.2		715							
APR 19	0.0C	12002.2		723							
APR 20	0.0C	12002.2		717							
APR 21	0.0C	12002.2		729							
APR 22	0.0C	12002.2		727							
APR 23	0.0C	12002.2		749							
APR 24	0.0C	12002.2		743							
APR 25	0.0C	12002.2		741							
APR 26	0.0C	12002.2		745							
APR 27	0.0C	12002.2		749							
APR 28	0.0C	12002.2		741							
APR 29	0.0C	12002.2		762							
APR 30	0.0C	12002.2		751							

BURN-UP DATA FOR APRIL 1976

FLUX MAP 2-1-51 USED FOR BURN-UP CALCULATIONS

REGION	BURN-UP (MWD/MTU)
1	13325.7
2	13235.6
3	9432.4
CORE	12002.6

MAY 1976 ZION UNIT 2

DATE	AVG. POWER	BURNUP AT END OF DAY	INST. POWER	BORON CONC.	CONTROL BANK D	P/L RODS	TEMP.	PRES.	AVG. AXIAL OFFSET	STATUS	FLUX MAP
MAY 1	0.0C	12002.2		752							
MAY 2	0.0C	12002.2									
MAY 3	0.0C	12002.2									
MAY 4	0.0C	12002.2									
MAY 5	0.0C	12002.2									
MAY 6	0.0C	12002.2									
MAY 7	0.0C	12002.2									
MAY 8	0.0S	12002.2		753							
MAY 9	0.9	12002.6		752							
MAY 10	56.1	12023.5	35.0	629	187	228	551.1	2224	5.0		
MAY 11	84.6	12055.2	85.0	376	218	228	556.7	2230	1.3		
MAY 12	84.2	12086.7	85.0	377	216	228	558.3	2235	3.5		
MAY 13	84.1	12118.1	84.0	364	216	228	557.7	2235	2.6	E	
MAY 14	84.9	12149.8	85.0	367	216	228	557.8	2235	2.6	E	
MAY 15	84.9	12181.6	85.0	390	212	228	557.3	2237	0.9	X	
MAY 16	84.9	12213.3	85.0	357	218	228	557.7	2238	2.7	E	
MAY 17	82.0	12244.0	85.0	362	217	228	557.3	2238	1.9		
MAY 18	84.7	12275.7	85.0	362	217	228	557.9	2237	2.1		
MAY 19	85.0	12307.4	85.0	350	216	228	557.8	2236	-0.0	X	
MAY 20	84.2	12338.9	84.0	346	218	228	557.7	2237	1.9	X	
MAY 21	84.6	12370.6	85.0	347	214	228	557.6	2237	2.2	X	
MAY 22	84.8	12402.3	85.0	344	215	228	557.5	2237	1.4	E	
MAY 23	84.4	12433.8	85.0	341	217	228	557.6	2238	2.4	E	
MAY 24	84.9	12465.6	85.0	337	218	228	558.5	2237	1.9	E	
MAY 25	38.5	12480.0	84.5	339	220	228	555.8	2240	4.1	E	
MAY 26	0.5	12480.1		473							
MAY 27	59.6	12502.4	52.0	560	183	228	553.9	2237	-2.6		
MAY 28	84.9	12534.2	85.0	360	220	228	557.7	2237	1.6		
MAY 29	84.0	12565.6	84.0	342	218	228	557.0	2237	2.0		
MAY 30	84.3	12597.1	84.5	347	217	228	557.6	2238	2.5	X	
MAY 31	83.0	12628.1	84.0	336	220	228	557.6	2237	2.4		

BURN-UP DATA FOR MAY 1976

FLUX MAP 2-1-51 USED FOR BURN-UP CALCULATIONS

REGION	BURN-UP (MWD/MTU)
1	13996.4
2	13950.2
3	9923.7
CORE	12628.1

JUNE 1976 ZION UNIT 2

DATE	AVG. POWER	BURNUP AT END OF DAY	INST. POWER	BORON CONC.	CONTROL BANK D	P/L RODS	TEMP.	PRES.	AVG. AXIAL OFFSET	STATUS	FLUX MAP
JUN 1	17.1	12634.5	30.0	348	200	228	546.3	2237	-3.6		
JUN 2	0.0S	12634.5		550							
JUN 3	0.0C	12634.5		563							
JUN 4	0.0C	12634.5		1065							
JUN 5	0.0C	12634.5		1760							
JUN 6	0.0C	12634.5		1378							
JUN 7	0.0C	12634.5		1373							
JUN 8	0.0C	12634.5		1171							
JUN 9	0.0S	12634.5		1187							
JUN 10	0.0H	12634.5		938							
JUN 11	42.4	12650.4	30.0	631	191	228	550.1	2220	7.0		
JUN 12	85.0	12682.2	85.0	386	215	228	558.3	2242	0.6		
JUN 13	84.6	12713.8	85.0	341	219	228	557.9	2242	1.2		
JUN 14	85.0	12745.6	85.0	365	218	228	557.5	2242	1.0	X	
JUN 15	86.8	12778.0	85.0	323	213	228	558.3	2242	2.2	X	
JUN 16	95.9	12813.9	95.0	315	214	228	559.2	2242	1.9		2-1-53
JUN 17	99.5	12851.1		292							
JUN 18	99.4	12888.3	99.5	281	223	228	559.0	2242	-0.3		
JUN 19	99.5	12925.5	100.0	278	222	228	557.9	2242	-1.0	X	
JUN 20	4.4	12927.1		334							
JUN 21	14.3	12932.5	22.0	400	187	228	549.4	2242	0.1		
JUN 22	66.3	12957.2	45.0	467	192	228	553.0	2242	-1.6		
JUN 23	66.2	12982.0	99.0	337	220	228	559.5	2242	-0.3		
JUN 24	48.9	13000.3	1.0	263	191	228	521.2	2242			
JUN 25	54.9	13020.8	99.0	292	222	228	558.8	2242	0.4		
JUN 26	48.4	13038.9	2.0	287	191	228	548.1	2242	25.3		
JUN 27	92.0	13073.3	95.0	317	214	228	558.6	2242	0.1		
JUN 28	97.7	13109.8	99.5	209	220	228	559.1	2241	0.2		
JUN 29	99.9	13147.2	100.0	271	217	228	560.0	2242	-0.2		
JUN 30	100.0	13184.6	100.0	274	219	228	558.9	2242	-1.1		

BURN-UP DATA FOR JUNE 1976

FLUX MAP 2-1-53 USED FOR BURN-UP CALCULATIONS

REGION	BURN-UP (MWD/MTU)
1	14585.4
2	14587.4
3	10367.1
CORE	13184.6

JULY 1976 ZION UNIT 2

DATE	AVG. POWER	BURNUP AT END OF DAY	INST. POWER	BORON CONC.	CONTROL BANK D	P/L RODS	TEMP.	PRES.	AVG. AXIAL OFFSET	STATUS	FLUX MAP
JUL 1	99.8	13221.9	100.0	263	220	228	559.4	2242	-0.9	X	
JUL 2	99.1	13258.9	99.0	263	216	228	559.2	2242	-1.4	X	
JUL 3	90.4	13292.7	80.0	259	210	228	556.8	2243	-1.3		
JUL 4	75.9	13321.1	59.0	252	192	228	552.9	2243	-1.2		
JUL 5	84.3	13352.6	58.0	273	192	228	552.7	2243	4.8		
JUL 6	92.6	13387.3	91.0	256	207	228	556.1	2243	2.7		
JUL 7	97.7	13423.8	99.0	244	214	228	560.5	2243	0.5		
JUL 8	94.6	13459.2	99.0	243	219	228	558.9	2243	0.6		
JUL 9	98.9	13496.1	99.0	244	221	228	559.2	2244	0.6	X	
JUL 10	99.0	13533.2	99.0	239	219	228	559.9	2243	-1.8	X	
JUL 11	99.2	13570.3	100.0	233	218	228	560.5	2243	1.8	X	
JUL 12	96.7	13606.4	99.5	235	216	228	559.6	2243	1.8	X	
JUL 13	95.4	13642.1	95.0	253	208	228	559.9	2244	-1.0		
JUL 14	95.2	13677.7	91.0	245	208	228	558.7	2244	-0.7		
JUL 15	98.1	13714.4	100.0	219	220	228	559.2	2244	1.9		
JUL 16	99.3	13751.5	100.0	239	217	228	559.9	2244	2.7		
JUL 17	94.6	13786.9	78.0	203	199	228	556.6	2240	1.4		
JUL 18	87.9	13819.7	62.0	222	199	228	554.7	2240	5.3		
JUL 19	96.5	13855.8	100.0	224	214	228	560.2	2240	1.4		2-1-60
JUL 20	92.4	13890.3	83.0	211	200	228	557.9	2240	1.1		
JUL 21	98.0	13927.0	99.0	240	217	228	560.0	2242	1.7		
JUL 22	96.5	13963.1	96.0	231	212	228	559.5	2244	-0.2		
JUL 23	98.4	13999.9	98.5	209	220	228	559.6	2239	0.3		
JUL 24	98.6	14036.7	98.5	229	217	228	559.3	2240	-0.2	X	
JUL 25	92.0	14071.1	63.0	224	197	228	553.1	2239	5.5		
JUL 26	89.6	14104.6	78.0	191	189	228	554.8	2239	0.4		
JUL 27	98.5	14141.5	100.0	211	214	228	560.0	2240	-0.6		
JUL 28	100.0	14178.9	100.0	200	220	228	559.2	2239	0.5		
JUL 29	99.8	14216.2	100.0	198	220	228	559.6	2238	1.1		
JUL 30	99.7	14253.4	100.0	193	217	228	560.0	2238	1.9	X	
JUL 31	92.9	14288.2	100.0	191	217	228	559.3	2238	1.2	X	

BURN-UP DATA FOR JULY 1976

FLUX MAP 2-1-60 USED FOR BURN-UP CALCULATIONS

REGION	BURN-UP (MWD/MTU)
1	15748.1
2	15844.4
3	11256.6
CORE	14287.5

AUGUST 1976 ZION UNIT 2

DATE	AVG. POWER	BURNUP AT END OF DAY	INST. POWER	BORON CONC.	CONTROL BANK D	P/L RODS	TEMP.	PRES.	AVG. AXIAL OFFSET	STATUS	FLUX MAP
AUG 1	70.2	14314.4	59.5	192	190	228	554.1	2238	-1.5		
AUG 2	92.3	14348.9	86.0	216	207	228	557.7	2238	-0.2		
AUG 3	94.1	14384.1	94.0	192	216	228	557.9	2238	1.2		
AUG 4	96.7	14420.3	99.0	189	220	228	559.4	2238	1.5		
AUG 5	93.7	14455.3	99.0	178	214	228	560.6	2238	-2.0		
AUG 6	93.0	14490.1	95.0	178	212	228	560.4	2238	-1.7		
AUG 7	95.9	14525.9	92.5	183	215	228	558.4	2238	1.7		
AUG 8	80.1	14555.9	87.0	181	207	228	557.8	2238	-2.4		
AUG 9	0.0S	14555.9		358							
AUG 10	0.0C	14555.9		593							
AUG 11	0.0C	14555.9		591							
AUG 12	0.0S	14555.9		589							
AUG 13	31.9	14567.8	1.5	553	181	228	545.7	2235	15.7		
AUG 14	98.3	14604.6	100.0	274	220	228	559.4	2235	0.2		
AUG 15	96.3	14640.6	98.0	192	219	228	558.7	2236	-0.4		
AUG 16	95.2	14676.2	99.0	178	212	228	559.0	2236	-0.4		
AUG 17	97.2	14712.5	99.5	172	217	228	559.5	2236	1.4		
AUG 18	94.6	14747.9	94.0	173	217	228	557.6	2236	0.6		
AUG 19	98.9	14784.9	98.0	169	218	228	559.4	2236	-0.9		2-1-61
AUG 20	91.9	14819.2	82.0	170	215	228	557.9	2236	2.3		
AUG 21	2.3	14820.1		340							
AUG 22	64.0	14844.0	48.0	310	186	228	552.0	2236	-6.7		
AUG 23	93.4	14878.9	91.0	231	215	228	559.2	2235	-1.6		
AUG 24	98.3	14915.7	98.0	169	225	228	558.2	2235	-1.1		
AUG 25	93.8	14950.8	99.0	162	216	228	559.3	2235	-0.6		
AUG 26	92.9	14985.5	99.5	151	222	228	559.9	2235	-1.6		
AUG 27	92.4	15020.0	98.0	162	223	228	559.7	2235	0.9		
AUG 28	55.6	15040.8	52.0	151	196	228	554.4	2236	4.4		
AUG 29	50.9	15059.9	51.0	216	184	228	553.2	2235	-1.3		
AUG 30	85.8	15091.9	90.0	210	206	228	558.7	2235	-0.3		
AUG 31	93.1	15126.8	94.0	153	227	228	557.9	2236	-0.2		

BURN-UP DATA FOR AUGUST 1976

FLUX MAP 2-1-61 USED FOR BURN-UP CALCULATIONS

REGION	BURN-UP (MWD/MTU)
1	16631.5
2	16802.5
3	11931.8
CORE	15126.3

SEPTEMBER 1976 ZION UNIT 2

DATE	AVG. POWER	BURNUP AT END OF DAY	INST. POWER	BORON CONC.	CONTROL BANK D	P/L RODS	TEMP.	PRES.	AVG. AXIAL OFFSET	STATUS	FLUX MAP
SEP 1	93.7	15161.8	98.0	149	222	228	559.1	2236	-0.8		
SEP 2	98.9	15198.8	99.0	142	223	228	558.5	2236	-2.6		
SEP 3	92.5	15233.4	81.5	133	214	228	558.1	2236	-1.7		
SEP 4	70.2	15259.6	80.0	138	202	228	557.4	2237	-2.0		
SEP 5	53.1	15279.5	53.0	179	184	228	553.1	2236	-3.8		
SEP 6	52.4	15299.1	53.5	204	180	228	554.6	2236	-3.7		
SEP 7	85.5	15331.0	98.0	188	204	228	557.3	2236	-0.2		
SEP 8	93.2	15365.9	90.0	137	223	228	557.1	2236	-0.7		
SEP 9	92.7	15400.5	93.0	122	225	228	556.9	2236	-2.6		
SEP 10	93.5	15435.5	96.0	255	120	228	559.3	2236	-1.6		
SEP 11	52.5	15455.1	51.5	109	185	228	553.5	2236	2.8		
SEP 12	50.1	15473.9	51.0	179	182	228	553.7	2236	-5.0		
SEP 13	81.7	15504.4		175							
SEP 14	95.1	15540.0	98.0	130	214	228	559.3	2235	-1.5		
SEP 15	94.2	15575.2	95.0	110	211	228	559.6	2234	0.9		
SEP 16	98.1	15611.9	99.0	122	220	228	558.8	2234	0.8		
SEP 17	93.5	15646.8	99.0	103	210	228	553.9	2234	-0.9		
SEP 18	3.3	15648.1		142							
SEP 19	0.0S	15648.1		553							
SEP 20	0.0C	15648.1		654							
SEP 21	0.0C	15648.1		641							
SEP 22	0.0C	15648.1		622							
SEP 23	0.0C	15648.1		630							
SEP 24	0.0C	15648.1		623							
SEP 25	0.0C	15648.1		623							
SEP 26	0.0C	15648.1		625							
SEP 27	0.0C	15648.1		546							
SEP 28	0.0C	15648.1		609							
SEP 29	0.0C	15648.1		604							
SEP 30	0.0C	15648.1		603							

BURN-UP DATA FOR SEPTEMBER 1976

FLUX MAP 2-1-61 USED FOR BURN-UP CALCULATIONS

REGION	BURN-UP (MWD/MTU)
1	17180.2
2	17397.5
3	12351.3
CORE	15647.3

OCTOBER 1976 ZION UNIT 2

DATE	AVG. POWER	BURNUP AT END OF DAY	INST. POWER	BORON CONC.	CONTROL BANK D	P/L RODS	TEMP.	PRES.	AVG. AXIAL OFFSET	STATUS	FLUX MAP
OCT 1	0.0C	15648.1		603							
OCT 2	0.0C	15648.1		611							
OCT 3	0.0C	15548.1		600							
OCT 4	0.0C	15648.1									
OCT 5	0.0C	15648.1									
OCT 6	0.0C	15648.1									
OCT 7	0.0C	15548.1									
OCT 8	0.0C	15648.1									
OCT 9	0.0C	15648.1									
OCT 10	0.0C	15648.1									
OCT 11	0.0C	15548.1									
OCT 12	0.0C	15648.1									
OCT 13	0.0C	15648.1									
OCT 14	0.0C	15648.1									
OCT 15	0.0C	15548.1									
OCT 16	0.0C	15648.1									
OCT 17	0.0C	15648.1									
OCT 18	0.0C	15648.1									
OCT 19	0.0C	15648.1									
OCT 20	0.0C	15648.1									
OCT 21	0.0C	15648.1									
OCT 22	0.0C	15648.1									
OCT 23	0.0C	15648.1									
OCT 24	0.0C	15648.1		663							
OCT 25	0.0H	15648.1		660							
OCT 26	0.0H	15648.1		670							
OCT 27	0.0H	15648.1		665							
OCT 28	5.5	15650.1		480							
OCT 29	49.0	15668.4		240							
OCT 30	50.1	15687.2		156							
OCT 31	11.6	15591.5		187							

BURN-UP DATA FOR OCTOBER 1976

FLUX MAP 2-1-61 USED FOR BURN-UP CALCULATIONS

REGION	BURN-UP (MWD/MTU)
1	17226.0
2	17447.3
3	12386.3
CORE	15690.8

NOVEMBER 1976 ZION UNIT 2

DATE	AVG. POWER	BURNUP AT END OF DAY	INST. POWER	BORON CONC.	CONTROL BANK D	P/L RODS	TEMP.	PRES.	AVG. AXIAL OFFSET	STATUS	FLUX MAP
NOV 1	89.0	15724.8	90.0	217	206	228	555.3	2271	0.2		
NOV 2	94.7	15760.2	99.0	114	222	228	557.0	2236	2.2		
NOV 3	98.5	15797.0	98.0	124	223	228	557.5	2236	2.3		
NOV 4	90.0	15830.7	99.5	107	222	228	559.2	2237	0.9		2-1-62
NOV 5	84.5	15862.3	96.0	90	212	228	559.1	2237	1.3		
NOV 6	98.5	15899.1	99.0	111	220	228	558.3	2236	0.1		
NOV 7	98.7	15936.0	99.0	104	220	228				P	
NOV 8	99.2	15973.1	100.0	90	219	228	559.3	2237	1.0	P	
NOV 9	98.8	16010.0	99.0	86	216	228	560.0	2237	0.8	X	
NOV 10	98.0	16046.7	98.0	81	220	228				P	
NOV 11	98.0	16083.3	98.0	77	220	228				P	
NOV 12	98.6	16120.2	99.0	73	219	228				P	
NOV 13	98.6	16157.0	99.0	73	228	228				P	
NOV 14	99.0	16194.1	99.5	62	221	228	559.2	2238	1.3	P	
NOV 15	99.0	16231.1	99.0	62	221	228				P	
NOV 16	98.7	16268.0	99.0	58	226	228	558.8	2239	0.4	P	
NOV 17	98.6	16304.8	98.5	52	226	228	559.9	2240	1.0	X	
NOV 18	99.0	16341.9	99.0	49	222	228				P	
NOV 19	99.1	16378.9	99.0	48	226	228				P	
NOV 20	99.8	16416.2	100.0	46	219	228				P	
NOV 21	99.5	16453.4	100.0	38	219	228				P	
NOV 22	99.5	16490.6	99.5	36	224	228				P	
NOV 23	99.3	16527.8	100.0	33	220	228	559.3	2239	1.4	S	
NOV 24	96.3	16563.8	97.0	29	218	228	559.5	2240	1.6		
NOV 25	74.4	16591.6	48.0	40	184	228	553.2	2240	-1.1		
NOV 26	98.4	16628.4	99.0	48	207	228	556.4	2240	-1.3		
NOV 27	96.3	16664.4	99.5	47	221	228	559.3	2240	-2.3		
NOV 28	99.0	16701.4	99.0	27	221	228					
NOV 29	99.0	16738.4	99.0	23	222	228					
NOV 30	99.0	16775.4	99.0	20	223	228				P	

BURN-UP DATA FOR NOVEMBER 1976

FLUX MAP 2-1-62 USED FOR BURN-UP CALCULATIONS

REGION	BURN-UP (MWD/MTU)
1	18347.8
2	18676.1
3	13279.0
CORE	16771.6

DECEMBER 1976 ZION UNIT 2

DATE	AVG. POWER	BURNUP AT END OF DAY	INST. POWER	BORON CONC.	CONTROL BANK D	P/L RODS	TEMP.	PRES.	AVG. AXIAL OFFSET	STATUS	FLUX MAP
DEC 1	82.3	16806.2	99.0	17	223	228	559.6	2240	-0.4	E	
DEC 2	6.5	16808.6		15							
DEC 3	91.7	16842.9	90.0	117	205	228	559.4	2240	1.3		
DEC 4	98.5	16879.8	99.0	25	223	228	559.9	2240	-1.7		
DEC 5	97.8	16916.3	98.0	14	223	228	558.6	2240	0.2		
DEC 6	97.9	16952.9	98.0	10	228	228	559.0	2241	-0.3	X	
DEC 7	95.4	16988.6	97.0	7	224	228	559.8	2241	-1.1	X	2-1-63
DEC 8	90.9	17022.6	90.0	6	214	228	559.8	2241	-0.8		
DEC 9	92.1	17057.0	93.0	7	210	228	560.5	2241	1.0		
DEC 10	92.0	17091.4	92.0	7	222	228	558.3	2243	1.1	E	
DEC 11	92.0	17125.8	92.0	7	219	228	559.4	2242	1.3	E	
DEC 12	90.4	17159.6	90.0	8	224	228	557.8	2243	1.6		
DEC 13	90.0	17193.3	90.0	8	228	228	558.4	2243	0.8		
DEC 14	87.3	17225.9	87.0	8	227	228	558.9	2243			
DEC 15	86.0	17258.1	86.0	16	228	228	558.1	2243	1.4		
DEC 16	49.9	17276.7	86.0	8	219	228	558.3	2243	1.0		
DEC 17	41.9	17292.4		7							
DEC 18	79.1	17322.0	86.5	61	209	228					
DEC 19	85.3	17353.9	86.0	37	211	228					
DEC 20	84.3	17385.4	84.5	14	227	228	555.9	2243	4.1		
DEC 21	0.1	17385.4		285							
DEC 22	66.4	17410.2	97.0	118	213	228	559.2	2243	-1.8		
DEC 23	80.3	17440.3	83.0	31	207	228					
DEC 24	80.5	17470.4	79.0	29	210	228					
DEC 25	81.0	17500.7	81.0	11	214	228					
DEC 26	80.0	17530.6	80.0	8	214	228					
DEC 27	78.8	17560.0	79.0	11	214	228					
DEC 28	78.4	17589.3	79.0	12	219	228	556.5	2242	3.7	E	
DEC 29	75.9	17617.7	76.5	9	221	228	556.2	2242	5.0		
DEC 30	76.1	17646.2	76.0	8	219	228	557.2	2242	4.4		
DEC 31	76.9	17674.9	79.0	11	228	228					

BURN-UP DATA FOR DECEMBER 1976

FLUX MAP 2-1-63 USED FOR BURN-UP CALCULATIONS

REGION	BURN-UP (MWD/MTU)
1	19277.7
2	19691.7
3	14033.1
CORE	17671.3

JANUARY 1977 ZION UNIT 2

DATE	AVG. POWER	BURNUP AT END OF DAY	INST. POWER	BORON CONC.	CONTROL BANK D	P/L RODS	TEMP.	PRES.	AVG. AXIAL OFFSET	STATUS	FLUX MAP
JAN 1	74.0	17702.6	74.0	8	228	228	555.6	2243	2.1		
JAN 2	74.3	17730.4	74.0	8	228	228					
JAN 3	72.6	17757.5	72.0	10	228	228	554.9	2242	0.7		
JAN 4	72.0	17784.4	72.0	8	219	228	555.4	2242	4.9		2-1-65
JAN 5	72.0	17811.4	72.0	8	227	228	555.2	2242	3.5	E	
JAN 6	70.2	17837.6	71.0	9	228	228	554.9	2243	5.0		
JAN 7	64.8	17861.8	69.0	9	228	228	555.5	2242	4.3		
JAN 8	0.0H	17861.8		601				END OF CYCLE 1			
JAN 9	0.0C	17861.8		853							
JAN 10	0.0C	17861.8		1518							
JAN 11	0.0C	17861.8		1513							
JAN 12	0.0C	17861.8									
JAN 13	0.0C	17861.8									
JAN 14	0.0C	17861.8									
JAN 15	0.0C	17861.8									
JAN 16	0.0C	17861.8									
JAN 17	0.0C	17861.8									
JAN 18	0.0C	17861.8									
JAN 19	0.0C	17861.8									
JAN 20	0.0C	17861.8									
JAN 21	0.0C	17861.8									
JAN 22	0.0C	17861.8									
JAN 23	0.0C	17861.8									
JAN 24	0.0C	17861.8									
JAN 25	0.0C	17861.8									
JAN 26	0.0C	17861.8									
JAN 27	0.0C	17861.8									
JAN 28	0.0C	17861.8									
JAN 29	0.0C	17861.8									
JAN 30	0.0C	17861.8									
JAN 31	0.0C	17861.8									

BURN-UP DATA FOR JANUARY 1977

FLUX MAP 2-1-65 USED FOR BURN-UP CALCULATIONS

REGION	BURN-UP (MWD/MTU)
1	19459.0
2	19901.4
3	14192.0
CORE	17857.5

BEGINNING OF CYCLE 2 1977

FLUX MAP 2-2- 1 USED FOR BURN-UP CALCULATIONS

REGION	BURN-UP (MWD/MTU)
1	17447.1
2	19947.1
3	14191.9
CORE	11688.6

FEBRUARY 1977 ZION UNIT 2

DATE	AVG. POWER	BURNUP AT END OF DAY	INST. POWER	BORON CONC.	CONTROL BANK D	P/L RODS	TEMP.	PRES.	AVG. AXIAL OFFSET	STATUS	FLUX MAP
FEB 1	0.0C	11688.6									
FEB 2	0.0C	11688.6									
FEB 3	0.0C	11688.6									
FEB 4	0.0C	11688.6									
FEB 5	0.0C	11688.6									
FEB 6	0.0C	11688.6									
FEB 7	0.0C	11688.6									
FEB 8	0.0C	11688.6									
FEB 9	0.0C	11688.6									
FEB 10	0.0C	11688.6									
FEB 11	0.0C	11688.6									
FEB 12	0.0C	11688.6									
FEB 13	0.0C	11688.6									
FEB 14	0.0C	11688.6									
FEB 15	0.0C	11688.6									
FEB 16	0.0C	11688.6									
FEB 17	0.0C	11688.6									
FEB 18	0.0C	11688.6									
FEB 19	0.0C	11688.6									
FEB 20	0.0C	11688.6									
FEB 21	0.0C	11688.6									
FEB 22	0.0C	11688.6									
FEB 23	0.0C	11688.6									
FEB 24	0.0C	11688.6									
FEB 25	0.0C	11688.6									
FEB 26	0.0C	11688.6									
FEB 27	0.0C	11688.6									
FEB 28	0.0C	11688.6									

MARCH 1977 ZION UNIT 2

DATE	AVG. POWER	BURNUP AT END OF DAY	INST. POWER	BORON CONC.	CONTROL BANK D	P/L RODS	TEMP.	PRES.	AVG. AXIAL OFFSET	STATUS	FLUX MAP
MAR 1	0.0C	11688.6									
MAR 2	0.0C	11688.6									
MAR 3	0.0C	11688.6									
MAR 4	0.0C	11688.6									
MAR 5	0.0C	11688.6									
MAR 6	0.0C	11688.6									
MAR 7	0.0C	11688.6									
MAR 8	0.0C	11688.6									
MAR 9	0.0C	11688.6									
MAR 10	0.0C	11688.6									
MAR 11	0.0C	11688.6									
MAR 12	0.0C	11688.6									
MAR 13	0.0C	11688.6									
MAR 14	0.0C	11688.6									
MAR 15	0.0C	11688.6									
MAR 16	0.0C	11688.6									
MAR 17	0.0C	11688.6									
MAR 18	0.0C	11688.6		2209							
MAR 19	0.0C	11688.6		2207							
MAR 20	0.0C	11688.6		2230							
MAR 21	0.0C	11688.6		2230							
MAR 22	0.0C	11688.6		2201							
MAR 23	0.0C	11688.6		2149							
MAR 24	0.0C	11688.6		1873							
MAR 25	0.0Z	11688.6		1309				START OF CYCLE 2			
MAR 26	0.0Z	11688.6		1002							
MAR 27	0.0Z	11688.6		1266							
MAR 28	6.8Z	11691.1		1180							
MAR 29	49.2	11709.5	48.0	1115	217	228	552.5	2225	5.3		2-2- 1
MAR 30	50.1	11728.2	50.0	995	214	228	553.2	2230	2.9		
MAR 31	49.5	11746.6		964						P	

BURN-UP DATA FOR MARCH 1977

FLUX MAP 2-2- 1 USED FOR BURN-UP CALCULATIONS

REGION	BURN-UP (MWD/MTU)
1	17494.8
2	20000.4
3	14254.9
4	57.5
CORE	11746.6

APRIL 1977 ZION UNIT 2

DATE	AVG. POWER	BURNUP AT END OF DAY	INST. POWER	BORON CONC.	CONTROL BANK D	P/L RODS	TEMP.	PRES.	AVG. AXIAL OFFSET	STATUS	FLUX MAP
APR 1	48.6	11764.7		977							
APR 2	13.0	11769.6		990							
APR 3	34.9	11782.6	48.0	1040	210	228	551.8	2232	10.9		
APR 4	71.4	11809.2	72.0	1022	213	228	555.8	2232	4.0		
APR 5	75.0	11837.2	75.0	941	217	228	555.8	2232	1.5		
APR 6	74.8	11865.1	75.0	937	224	228	556.3	2233	1.3	E	
APR 7	78.6	11894.4	75.0	914	209	228	556.9	2233	1.3	S	
APR 8	90.1	11928.0	90.5	885	218	228	557.6	2233	1.2		
APR 9	89.8	11961.5	90.0	888	220	228	558.0	2234	-0.0		
APR 10	89.6	11994.9	89.5	896	224	228	557.5	2234	2.3	X	
APR 11	89.7	12028.3	90.0	873	220	228	557.9	2233	1.9	X	
APR 12	89.7	12061.8	90.0	873	221	228	557.6	2233	1.2	X	
APR 13	89.8	12095.3	89.5	857	218	228	557.3	2233	0.9	X	
APR 14	61.9	12118.4	90.0	855	212	228	558.1	2233	0.3	X	
APR 15	83.2	12149.4	90.0	919	215	228	557.7	2235	1.6		
APR 16	72.3	12176.4	90.0	866	214	228	556.9	2235	1.2		
APR 17	82.6	12207.2	85.0	871	204	228	555.4	2230	2.4		
APR 18	99.4	12244.2	100.0	842	211	228	558.7	2229	0.8		
APR 19	66.1	12268.9	100.0	821	215	228	558.5	2230	0.8	X	
APR 20	64.3	12292.8		882							
APR 21	85.8	12324.8	89.0	836	199	223	557.6	2230	-1.7		
APR 22	99.4	12361.9	100.0	809	216	228	558.5	2229	0.4		
APR 23	99.8	12399.1	100.0	812	213	228	558.0	2231	0.4	E	2-2-10
APR 24	100.0D	12436.4	100.0	805	220	228	557.4	2231	2.1	E	
APR 25	100.0	12473.7	100.0	804	222	228	557.7	2231	1.3	E	
APR 26	100.0	12511.0	100.0	795	219	228	557.9	2234	1.7	E	
APR 27	99.7	12548.2	100.0	790	216	228	557.6	2235	2.0		
APR 28	98.2	12584.8	99.0	786	210	228	559.1	2233	1.4		
APR 29	98.5	12621.5	98.0	785	216	228	558.4	2234	-1.2		
APR 30	99.5	12658.6	100.0	798	215	228	557.4	2235	1.3		

BURN-UP DATA FOR APRIL 1977

FLUX MAP 2-2-10 USED FOR BURN-UP CALCULATIONS

REGION	BURN-UP (MWD/MTU)
1	18283.2
2	20865.9
3	15255.4
4	933.6
CORE	12657.6

MAY 1977 ZION UNIT 2

DATE	AVG. POWER	BURNUP AT END OF DAY	INST. POWER	BORON CONC.	CONTROL BANK D	P/L RODS	TEMP.	PRES.	AVG. AXIAL OFFSET	STATUS	FLUX MAP
MAY 1	98.9	12695.5	99.0	755	218	228	557.9	2235	0.3	E	
MAY 2	96.3	12731.4	96.0	810	216	228	557.4	2235	0.6		
MAY 3	98.3	12768.1	96.0	780	211	228	558.3	2235	2.5		
MAY 4	99.3	12805.1	100.0	767	216	228	558.1	2235	0.2		
MAY 5	99.4	12842.2	100.0	756	216	228	559.0	2236	0.3	E	
MAY 6	99.5	12879.3	100.0	751	213	228	559.1	2235	0.8	E	
MAY 7	97.6	12915.7		756							
MAY 8	97.0	12951.8		761							
MAY 9	97.4	12988.2		756							
MAY 10	97.9	13024.7		751						P	
MAY 11	98.4	13061.4		750						P	
MAY 12	98.7	13098.2	98.0	741	218	228	559.7	2238	1.4	E	
MAY 13	99.4	13135.2	100.0	742	219	228	558.5	2239	-0.0		
MAY 14	99.3	13172.3	100.0	734	217	228	559.3	2239	-0.3		
MAY 15	99.0	13209.2	99.5	731	221	228	558.7	2239	1.5		
MAY 16	98.8	13246.0	98.5	732	228	228	559.2	2239	1.3		
MAY 17	94.0	13281.1	98.0	711	215	228	558.0	2240	-0.1		
MAY 18	95.2	13316.6	94.0	721	221	228	558.0	2239	1.6		
MAY 19	94.7	13351.9	97.5	724	216	228	560.0	2239	0.7		
MAY 20	96.5	13388.6	99.0	735	224	228	556.4	2239	0.8		
MAY 21	99.6	13425.8		715							
MAY 22	96.0	13461.6		713							
MAY 23	96.9	13497.7	96.5	719	213	228	558.0	2231	0.4		2-2-12
MAY 24	98.3	13534.3	98.5	695	220	228	559.0	2231	2.1		
MAY 25	95.2	13569.8	96.0	672	221	228	557.7	2229	-1.6		
MAY 26	90.0	13603.4	85.0	693	218	228	557.4	2239	1.4		
MAY 27	78.5	13632.7	65.0	671	206	228	556.0	2239	-2.7		
MAY 28	99.3	13669.7	97.5	706	222	228	558.2	2239	-0.6		
MAY 29	99.6	13706.8	100.0	713	215	228	558.8	2238	-0.7		
MAY 30	99.0	13743.8	99.0	659	219	228	558.0	2239	-0.1	X	
MAY 31	97.4	13780.1	98.0	686	214	228	557.5	2237	-1.5		

BURN-UP DATA FOR MAY 1977

FLUX MAP 2-2-12 USED FOR BURN-UP CALCULATIONS

REGION	BURN-UP (MWD/MTU)
1	19248.9
2	21931.9
3	16472.4
4	2028.0
CORE	13779.6

JUNE 1977 ZION UNIT 2

DATE	AVG. POWER	BURNUP AT END OF DAY	INST. POWER	BORON CONC.	CONTROL BANK D	P/L RODS	TEMP.	PRES.	AVG. AXIAL OFFSET	STATUS	FLUX MAP
JUN 1	89.3	13813.4	90.0	691	213	228	557.5	2238	0.3		
JUN 2	88.9	13846.5	89.0	686	207	228	557.3	2228	0.7		
JUN 3	88.9	13879.7	89.0	683	207	228	557.1	2238	1.7	X	
JUN 4	89.0	13912.9		696						P	
JUN 5	99.2	13949.9	100.0	681	220	228	558.0	2238	-1.6		
JUN 6	95.1	13985.3	99.0	663	224	228	558.6	2237	-1.3		
JUN 7	84.1	14016.7	97.0	705	227	228	558.1	2238	-2.1		
JUN 8	61.1	14039.5	44.0	673	195	228	550.4	2238	-3.7		
JUN 9	77.7	14068.4	78.0	721	203	228	555.4	2238	2.0		
JUN 10	83.3	14099.5	89.0	677	218	228	559.6	2238	-2.4		
JUN 11	96.5	14135.5	95.5	669	222	228	558.3	2238	0.3		
JUN 12	79.2	14165.0	55.5	643	195	228	553.7	2236	1.1		
JUN 13	99.2	14202.0	100.0	661	228	228	558.4	2238	-0.2		
JUN 14	99.3	14239.0	100.0	642	221	228	559.3	2238	0.5	E	
JUN 15	37.1	14252.9	98.5	631	223	228	557.7	2239	-0.1	E	
JUN 16	67.3	14278.0	65.0	716	195	228	554.3	2238	-4.7		
JUN 17	99.4	14315.0	100.0	672	221	228	557.5	2237	0.2		
JUN 18	49.1	14333.4		608							
JUN 19	96.6	14369.4		683							
JUN 20	99.6	14406.5		636							
JUN 21	99.5	14443.6	99.5	628	223	228	558.3	2237	-0.3		
JUN 22	99.9	14480.9	100.0	611	224	228	559.0	2237	-0.7		
JUN 23	92.9	14515.5	83.0	604	202	228	555.5	2237	1.3		
JUN 24	98.0	14552.1	100.0	614	222	228	556.7	2237	1.4		
JUN 25	98.0	14588.6	99.0	617	214	228	558.4	2237	-1.9		
JUN 26	95.5	14624.2		607							
JUN 27	100.0	14661.5	100.0	609	228	228	558.6	2237	-1.2		
JUN 28	100.0	14698.8	100.0	615	213	228	559.0	2237	-0.2		
JUN 29	98.0	14735.3	100.0	610	221	228	558.5	2236	0.2	E	
JUN 30	99.3	14772.4	100.0	610	219	228	559.3	2237	-0.5		

BURN-UP DATA FOR JUNE 1977

FLUX MAP 2-2-16 USED FOR BURN-UP CALCULATIONS

REGION	BURN-UP (MWD/MTU)
1	20115.6
2	22874.0
3	17556.9
4	2987.2
CORE	14771.9

·ULY 1977 ZION UNIT 2

·ATE	AVG. POWER	BURNUP AT END OF DAY	INST. POWER	BORON CONC.	CONTROL BANK D	P/L RODS	TEMP.	PRES.	AVG. AXIAL OFFSET	STATUS	FLUX MAP
·JL 1	85.7	14804.3	100.0	598	227	228	558.8	2236	-1.7		
·JL 2	92.0	14838.6	85.0	617	208	228	556.1	2236	0.4		
·JL 3	97.1	14874.8	80.0	619	210	228	558.9	2236	0.3		
·JL 4	100.0	14912.1	100.0	591	218	228	558.9	2236	-0.0		
·JL 5	99.6	14949.3	100.0	581	221	228	557.8	2237	-0.1	E	2-2-16
·JL 6	99.9	14986.5	100.0	579	224	228	557.9	2237	-0.5	E	
·JL 7	99.5	15023.6		628						P	
·JL 8	100.0	15060.9		570						P	
·JL 9	98.8	15097.8		565							
·JL 10	47.2	15115.4		562							
·JL 11	0.0H	15115.4		459							
·JL 12	4.6	15117.1		611							
·JL 13	85.3	15148.9	82.0	748	214	228	556.9	2238	1.6		
·JL 14	97.1	15185.1	97.0	594	221	228	559.3	2238	-1.5		
·JL 15	97.9	15221.6	98.0	563	227	228	558.5	2238	-1.4		
·JL 16	98.4	15258.3	98.5	562	228	228	557.3	2237	-1.2		
·JL 17	67.8	15283.6	74.0	565	203	228	556.2	2238	-1.9		
·JL 18	88.5	15316.6	95.0	594	220	228	555.1	2238	1.2		
·JL 19	98.9	15353.5	99.5	555	220	228	559.0	2238	-1.7		
·JL 20	98.1	15390.0	99.0	587	226	228	557.8	2238	-0.9		
·JL 21	45.4	15407.0	99.0	543	215	228	558.2	2238	-0.8	E	
·JL 22	69.5	15432.9	50.0	598	183	228	555.2	2237	-5.1		
·JL 23	87.7	15465.6	65.0	601	207	228	554.2	2237	3.0		
·JL 24	97.6	15502.0	91.0	553	221	228	557.0	2237	1.6		
·JL 25	98.5	15538.7	99.0	535	220	228	558.9	2237	0.1		
·JL 26	94.3	15573.9	93.0	535	220	228	557.7	2236	3.0		
·JL 27	94.0	15608.9	98.0	519	212	228	557.7	2236	-2.2		
·JL 28	96.9	15645.1	96.0	519	220	228	557.0	2236	-0.5		
·JL 29	98.2	15681.7	99.0	485	218	228	558.4	2236	-0.8		
·JL 30	98.1	15718.3	98.5	515	221	228	557.8	2239	-0.1	E	
·JL 31	98.2	15754.9	98.5	502	220	228	559.0	2238	-0.5	X	

·IRN-UP DATA FOR JULY 1977

·LUX MAP 2-2-16 USED FOR BURN-UP CALCULATIONS

·EGTON	BURN-UP (MWD/MTU)
1	20973.8
2	23807.1
3	18530.9
4	3937.3
:ORE	15754.7

AUGUST 1977 ZION UNIT 2

DATE	AVG. POWER	BURNUP AT END OF DAY	INST. POWER	BORON CONC.	CONTROL BANK D	P/L RODS	TEMP.	PRES.	AVG. AXIAL OFFSET	STATUS	FLUX MAP
AUG 1	98.6	15791.7	99.0	507	221	228	558.1	2238	0.4	E	
AUG 2	99.8	15828.9	99.0	492	226	228	558.1	2232	-1.2	E	
AUG 3	99.0	15865.8	99.0	480	228	228	559.0	2231	-1.5	E	
AUG 4	98.6	15902.6	98.5	488	228	228	558.4	2233	-1.5	E	
AUG 5	97.3	15938.8	99.0	480	218	228	558.8	2232	-2.0		
AUG 6	98.7	15975.6	99.0	484	224	228	557.2	2232	0.3		
AUG 7	98.8	16012.5	99.0	473	226	228	557.2	2232	-0.4	X	
AUG 8	98.6	16049.3	99.0	474	226	228	556.8	2234	-1.0	E	2-2-17
AUG 9	99.0	16086.2	99.0	469	226	228	557.1	2234	-1.1	E	
AUG 10	95.9	16121.9	99.0	471	226	228	557.9	2232	-1.0	X	
AUG 11	98.3	16158.6	98.5	467	224	228	557.7	2234	0.1		
AUG 12	99.0	16195.5	98.5	461	228	228	557.0	2234	0.7	X	
AUG 13	99.2	16232.5	100.0	464	228	228	558.1	2234	-0.0	E	
AUG 14	99.6	16269.6	99.0	453	228	228	557.6	2234	-0.3	E	
AUG 15	99.3	16306.7	99.0	445	228	228	557.2	2234	-0.4	E	
AUG 16	99.0	16343.6	99.0	443	228	228	558.0	2234	-0.6	E	
AUG 17	98.7	16380.4	99.0	463	228	228	557.0	2234	-0.6	E	
AUG 18	93.8	16415.4	98.0	430	226	228	558.7	2234	-2.6		
AUG 19	99.0	16452.3	99.0	442	224	228	557.6	2233	-0.7		
AUG 20	99.3	16489.3	100.0	436	221	228	558.6	2233	-0.7	X	
AUG 21	98.1	16525.9	98.0	424	223	228	557.8	2235	-0.9	X	
AUG 22	98.7	16562.7	99.0	422	224	228	557.8	2235	-1.2	X	
AUG 23	99.0	16599.6	99.0	439	228	228	557.8	2235	-1.0	E	
AUG 24	99.0	16636.5	99.0	413	228	228	558.7	2234	-0.9	E	
AUG 25	94.7	16671.8	99.0	460	228	228	552.6	2235	3.4		
AUG 26	98.6	16708.6	99.0	426	228	228	558.8	2235	1.1		
AUG 27	98.7	16745.4	99.0	431	228	228	558.2	2235	0.7	X	
AUG 28	98.4	16782.1	99.0	399	228	228	558.3	2234	-0.2	E	
AUG 29	94.5	16817.4	95.0	406	214	228	557.9	2234	0.5		
AUG 30	97.5	16853.7	97.5	391	228	228	558.3	2235	-1.1		
AUG 31	98.2	16890.3	97.0	415	228	228	557.8	2235	-0.9	E	

BURN-UP DATA FOR AUGUST 1977

FLUX MAP 2-2-18 USED FOR BURN-UP CALCULATIONS

REGION	BURN-UP (MWD/MTU)
1	21986.2
2	24886.4
3	19881.9
4	5020.3
CORE	16890.0

SEPTEMBER 1977 ZION UNIT 2

DATE	AVG. POWER	BURNUP AT END OF DAY	INST. POWER	BORON CONC.	CONTROL BANK D	P/L RODS	TEMP.	PRES.	AVG. AXIAL OFFSET	STATUS	FLUX MAP
SEP 1	99.6	16927.5	99.0	405	228	228	556.6	2235	-0.1		2-2-18
SEP 2	99.0	16964.4	99.5	407	228	228	557.7	2234	0.1	X	
SEP 3	99.7	17001.6	100.0	401	226	228	557.8	2234	-0.6	X	
SEP 4	95.1	17037.0	83.0	391	207	228	556.9	2234	1.7		
SEP 5	97.9	17073.5	99.0	395	223	228	556.9	2234	-0.2		
SEP 6	99.8	17110.8	100.0	393	216	228	558.4	2234	-0.4		
SEP 7	100.0	17148.0	100.0	385	228	228	557.7	2235	-1.5	X	
SEP 8	99.9	17185.3	100.0	382	228	228	557.6	2234	-1.8	X	
SEP 9	99.7	17222.5	100.0	411	228	228	558.5	2234	-2.3	P	
SEP 10	100.0	17259.8	100.0	382	228	228	557.2	2235	-1.4	X	
SEP 11	100.0	17297.1	100.0	356	228	228	557.5	2236	-0.6	E	
SEP 12	99.3	17334.1	100.0	367	228	228	557.6	2236		E	
SEP 13	99.1	17371.0	99.0	362	228	228	558.4	2236			
SEP 14	99.0	17408.0	99.0	362	228	228	557.0	2236		P	
SEP 15	100.0	17445.2	100.0	355	228	228	558.0	2235		P	
SEP 16	99.9	17482.5	99.5	344	228	228	557.0	2235		P	
SEP 17	100.0	17519.8	100.0	351	228	228	558.4	2236	-1.5	X	
SEP 18	99.3	17556.8	99.0	341	228	228	557.6	2235	-1.3	E	
SEP 19	99.0	17593.7	99.0	334	228	228	557.5	2235	-1.3	E	
SEP 20	100.0	17631.0	100.0	328	228	228	559.0	2235	-1.8	E	
SEP 21	100.0	17668.3	100.0	337	228	228	557.8	2235	-1.4	E	
SEP 22	100.0	17705.6	100.0	332	228	228	558.4	2235	-0.6	E	
SEP 23	100.0	17742.9	100.0	324	228	228	558.7	2235	-1.2	E	
SEP 24	99.8	17780.1	100.0	329	228	228	558.4	2235	-1.1	E	
SEP 25	99.0	17817.0	99.0	324	228	228	557.7	2234	-1.1	E	
SEP 26	99.1	17854.0	99.5	318	228	228	558.6	2235	-1.5	E	2-2-19
SEP 27	98.9	17890.9	99.0	307	228	228	557.7	2234	-1.2	E	
SEP 28	99.0	17927.8	99.0	320	224	228	557.9	2234	-0.6	E	
SEP 29	99.0	17964.7	99.0	300	228	228	558.3	2234	-1.2	E	
SEP 30	98.4	18001.4		297						P	

BURN-UP DATA FOR SEPTEMBER 1977

FLUX MAP 2-2-19 USED FOR BURN-UP CALCULATIONS

REGION	BURN-UP (MWD/MTU)
1	22984.1
2	25945.4
3	21111.3
4	6072.5
CORE	18001.5

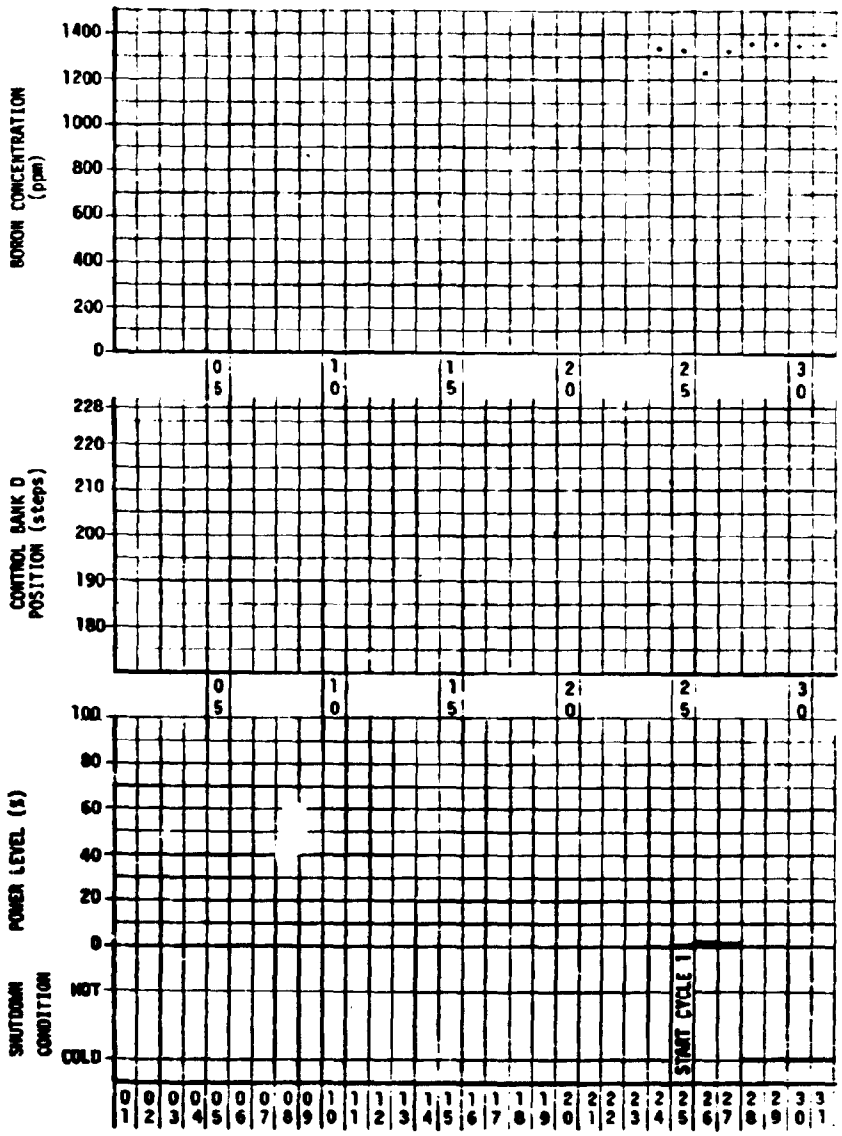

Diagram 3.2. 1 Operating History for December 1973

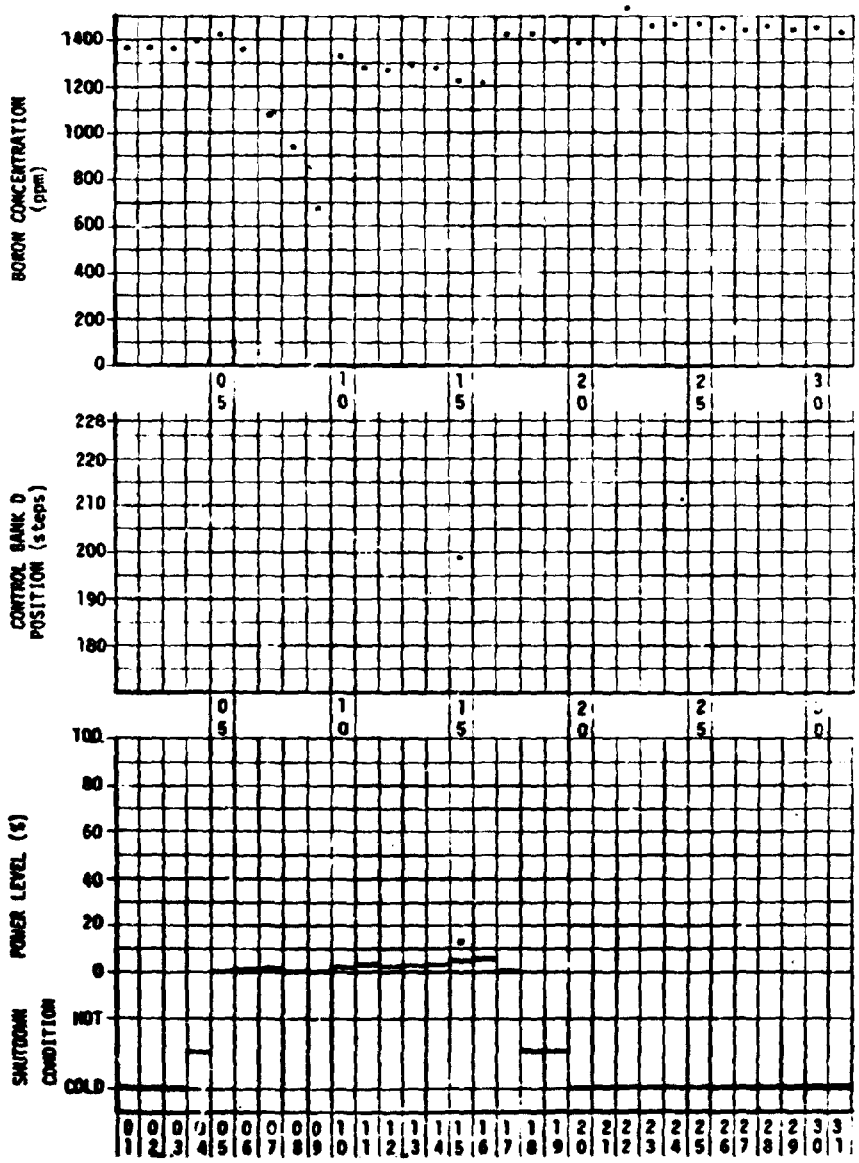

Diagram 3.2. 2 Operating History for January 1974

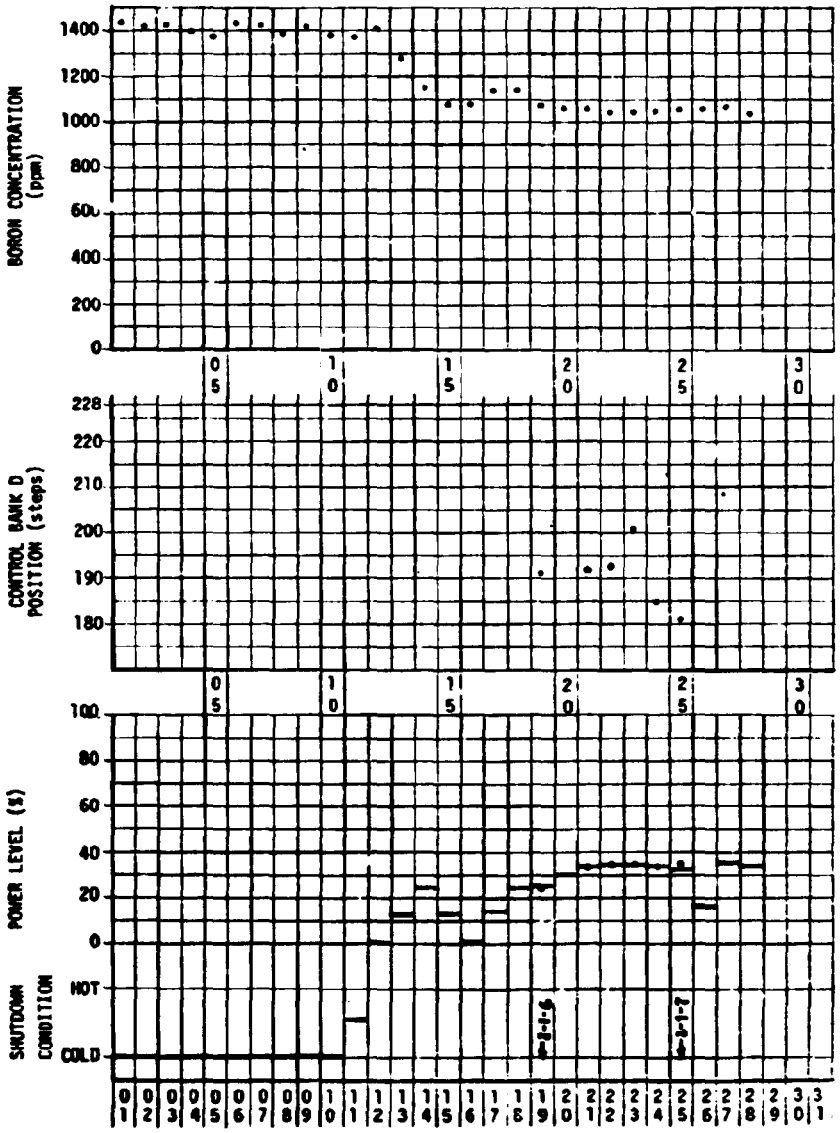

Diagram 3.2. 3 Operating History for February 1974

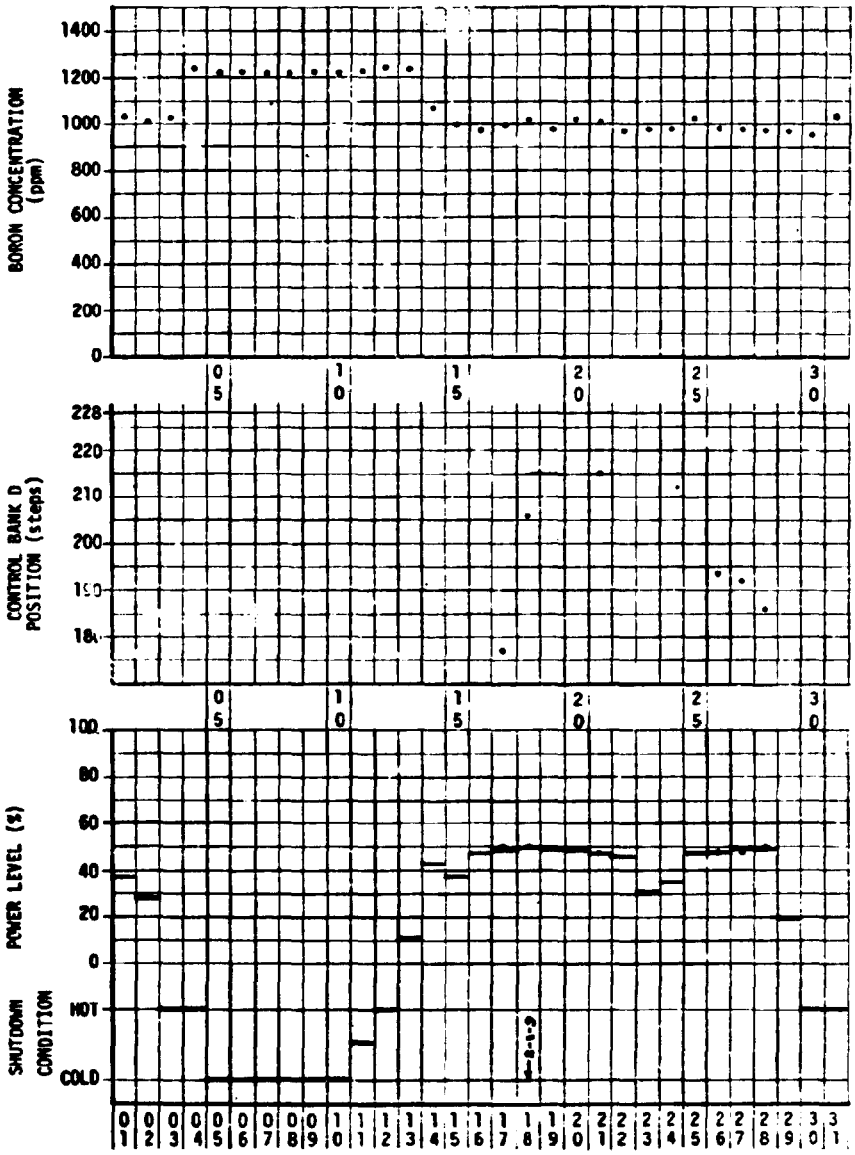

Diagram 3.2. 4 Operating History for March 1974

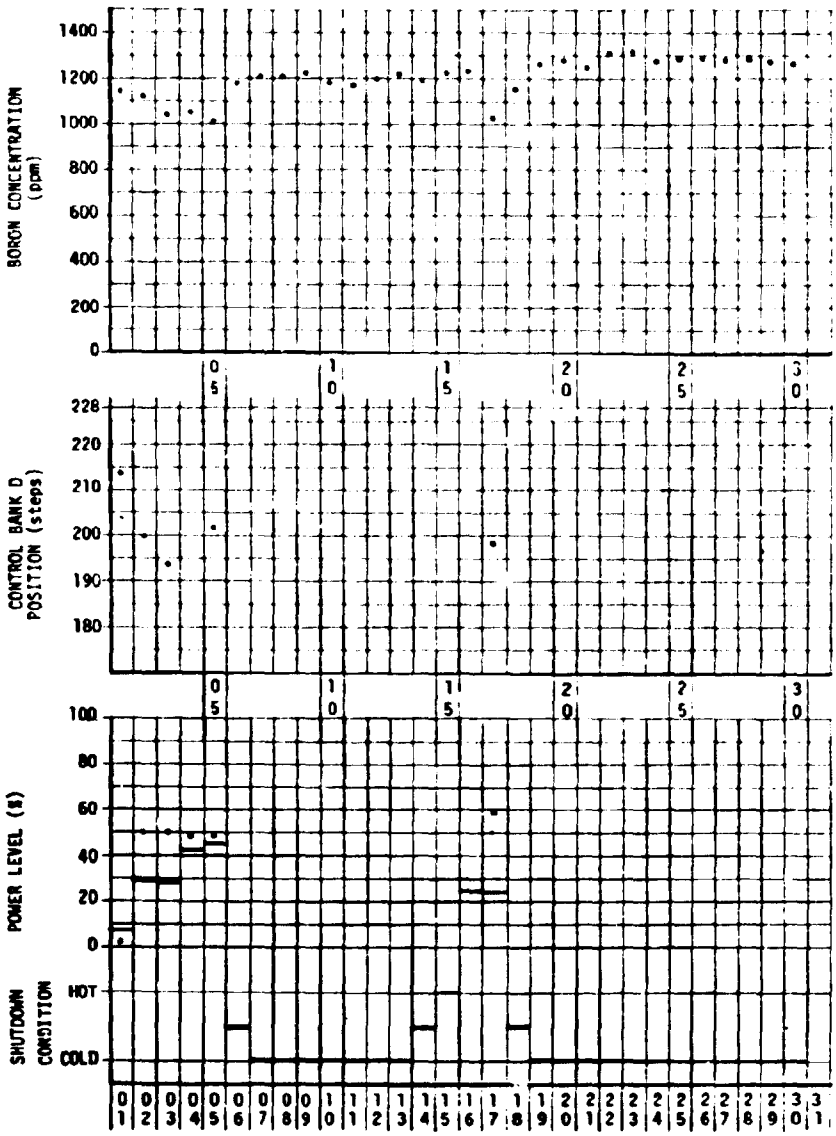

Diagram 3.2. 5 Operating History for April 1974

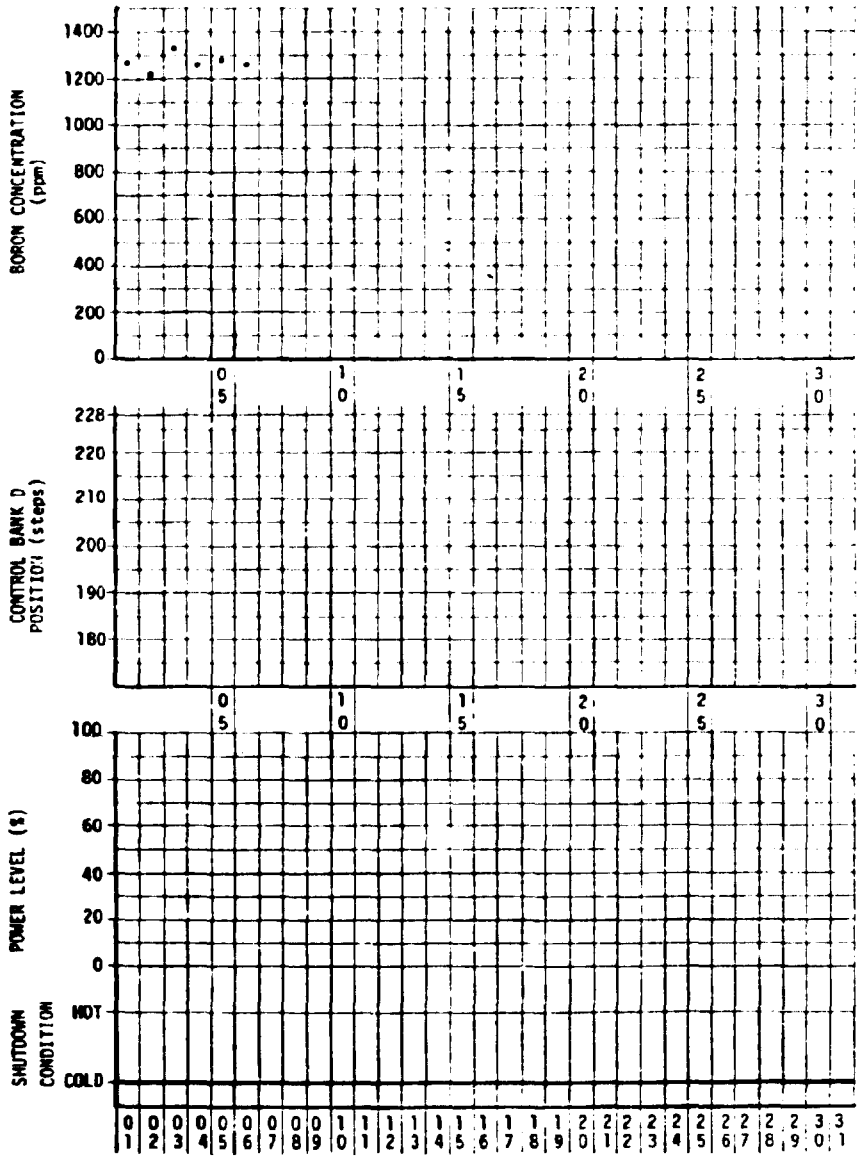

Diagram 3.2. 6 Operating History for May 1974

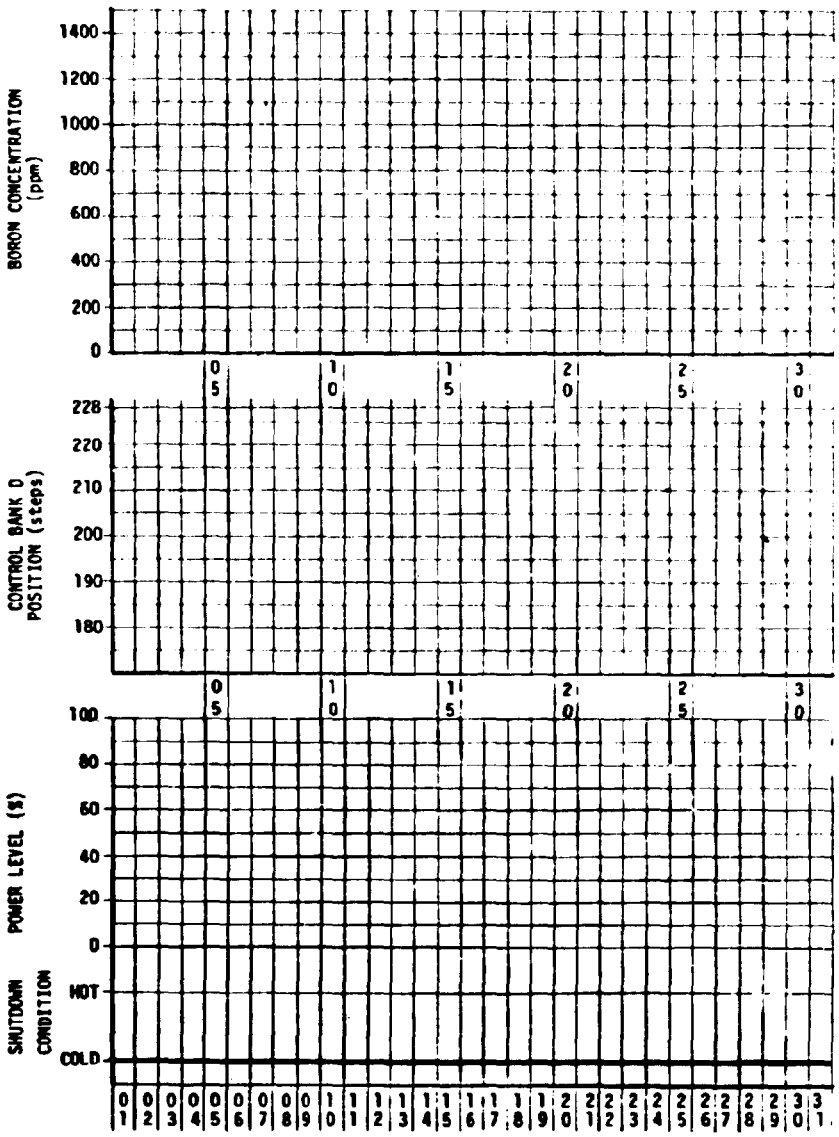

Diagram 3.2. 7 Operating History for June 1974

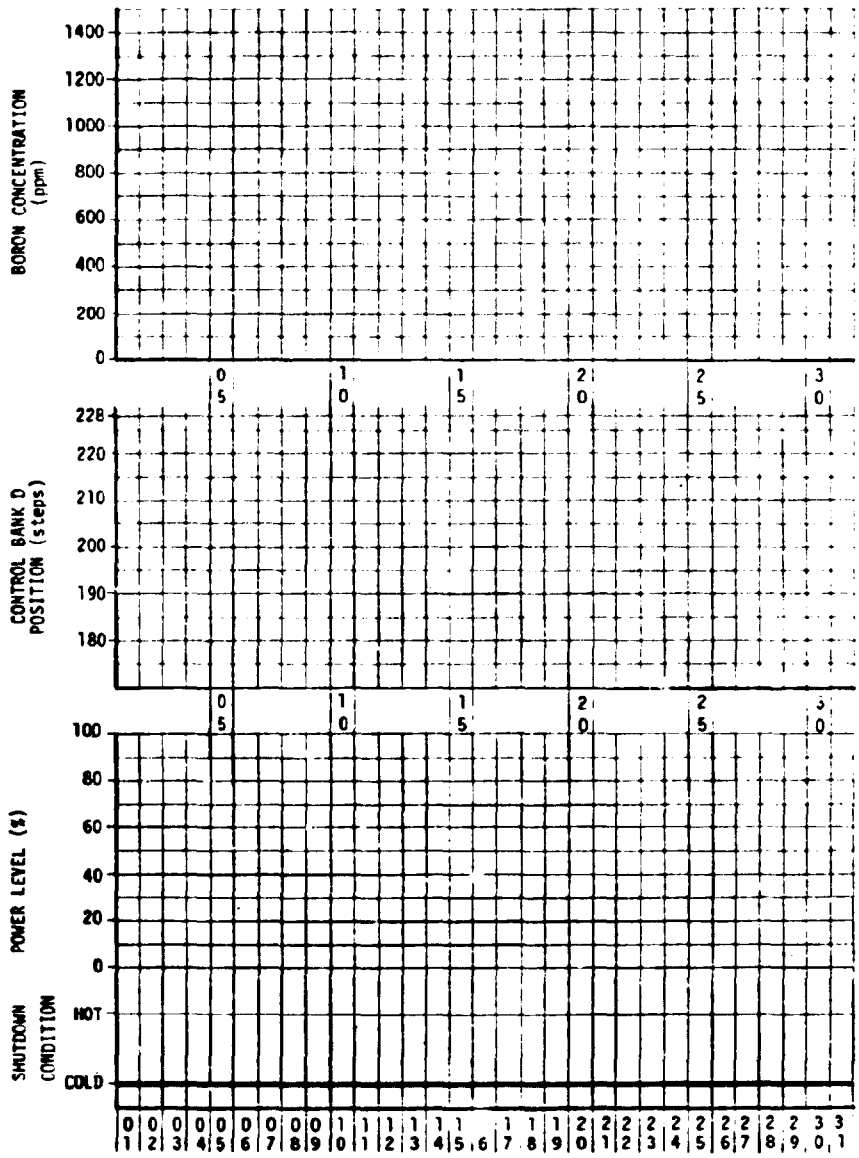

Diagram 3.2. 8 Operating History for July 1974

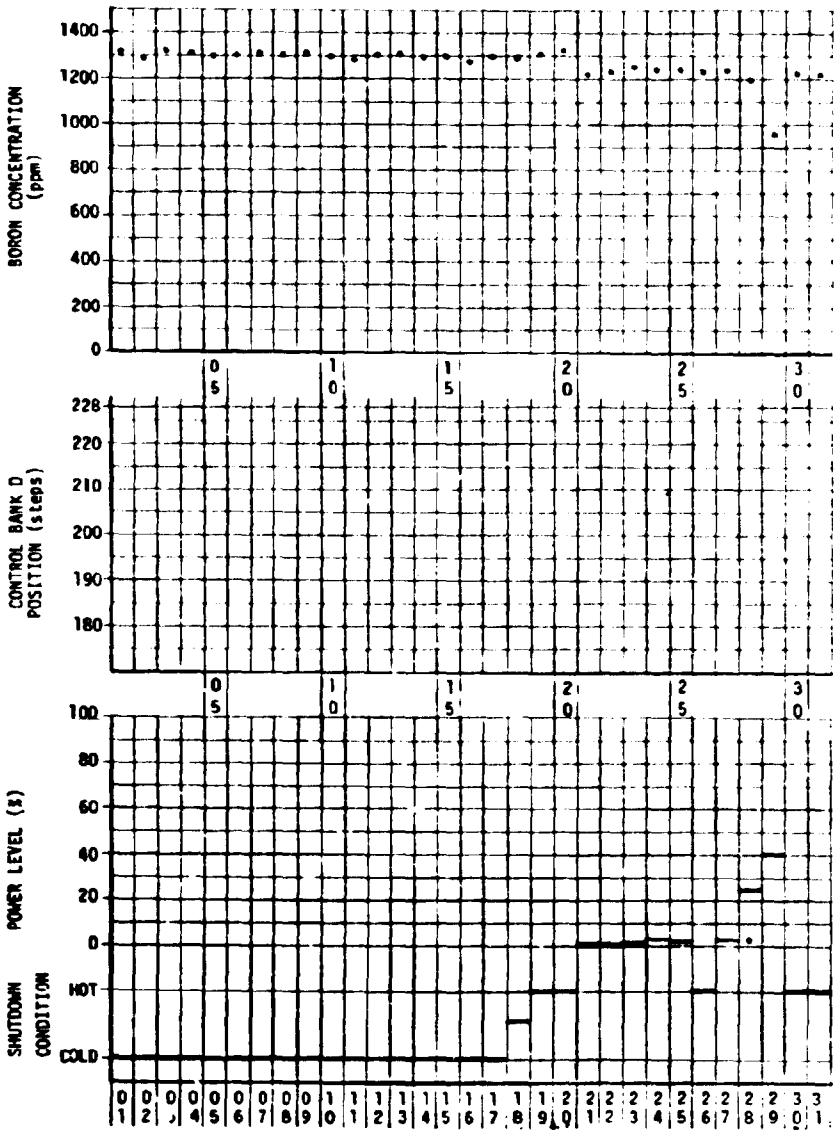

Diagram 3.2. 9 Operating History for August 1974

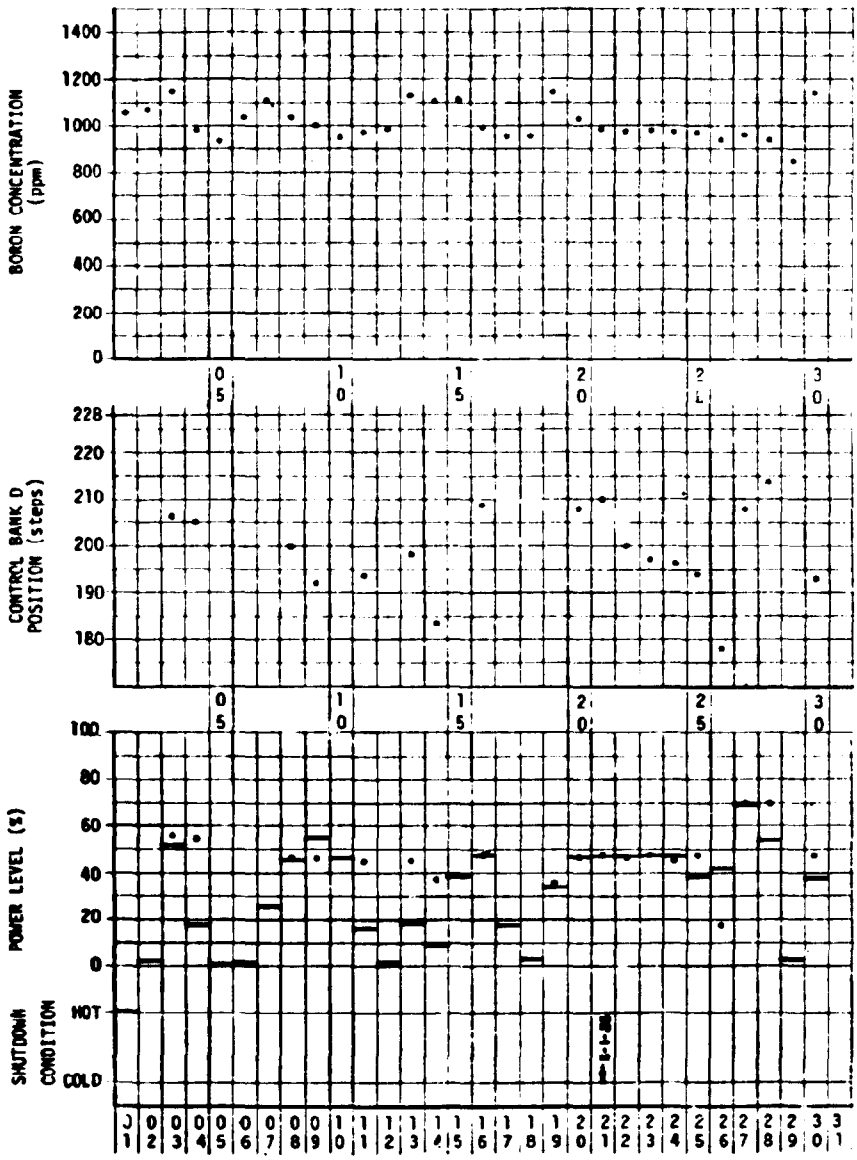

Diagram 3.2.10 Operating History for September 1974

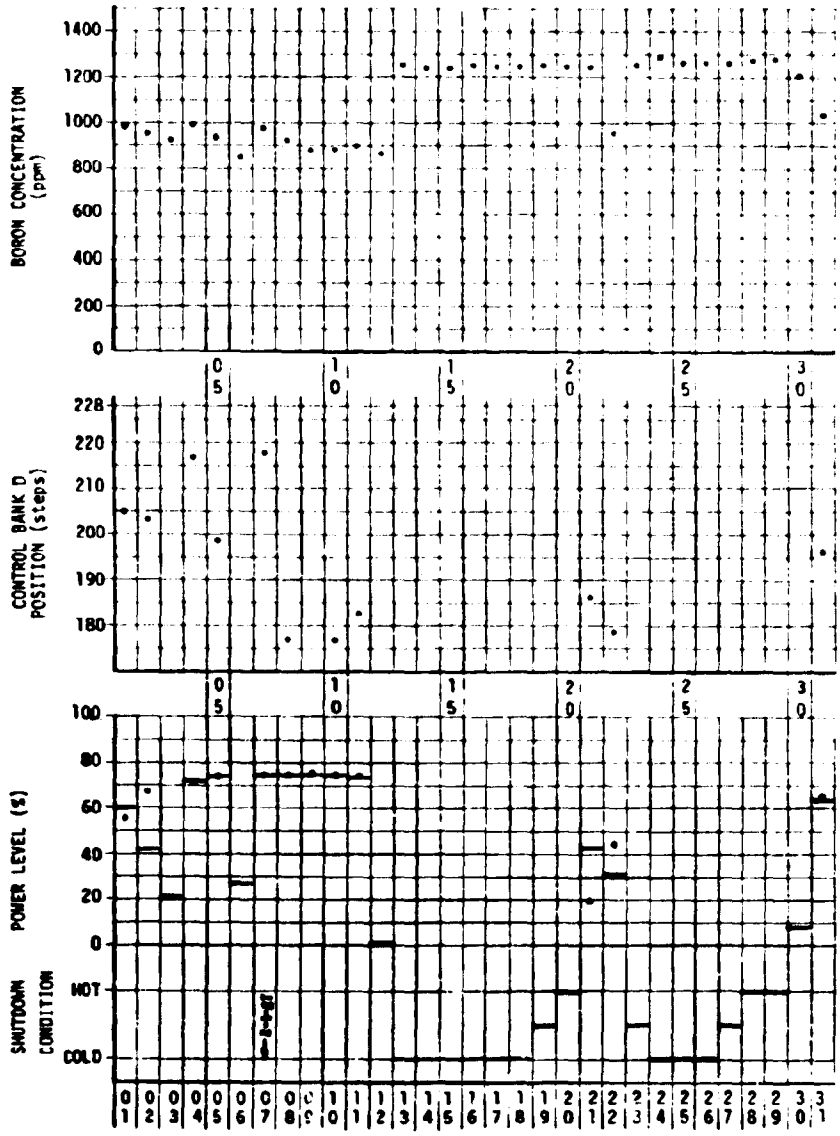

Diagram 3.2.11 Operating History for October 1974

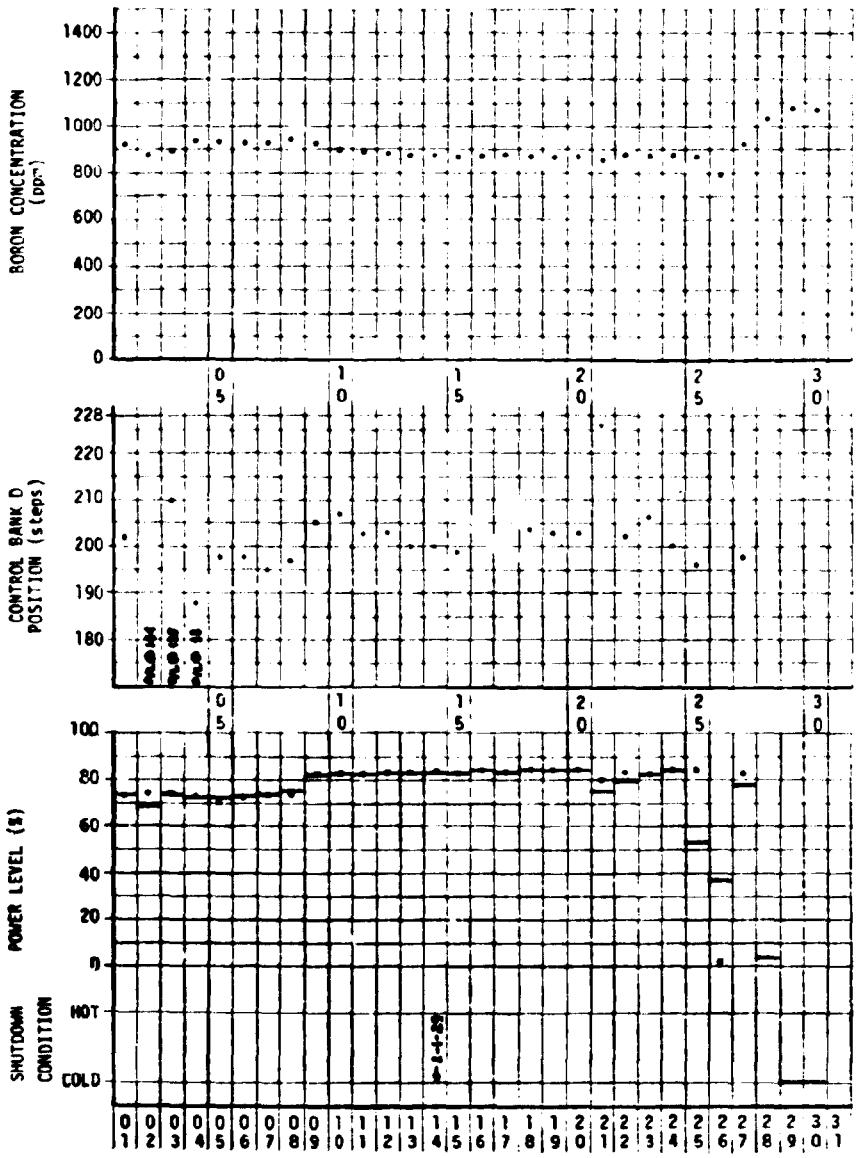

Diagram 3.2.12 Operating History for November 1974

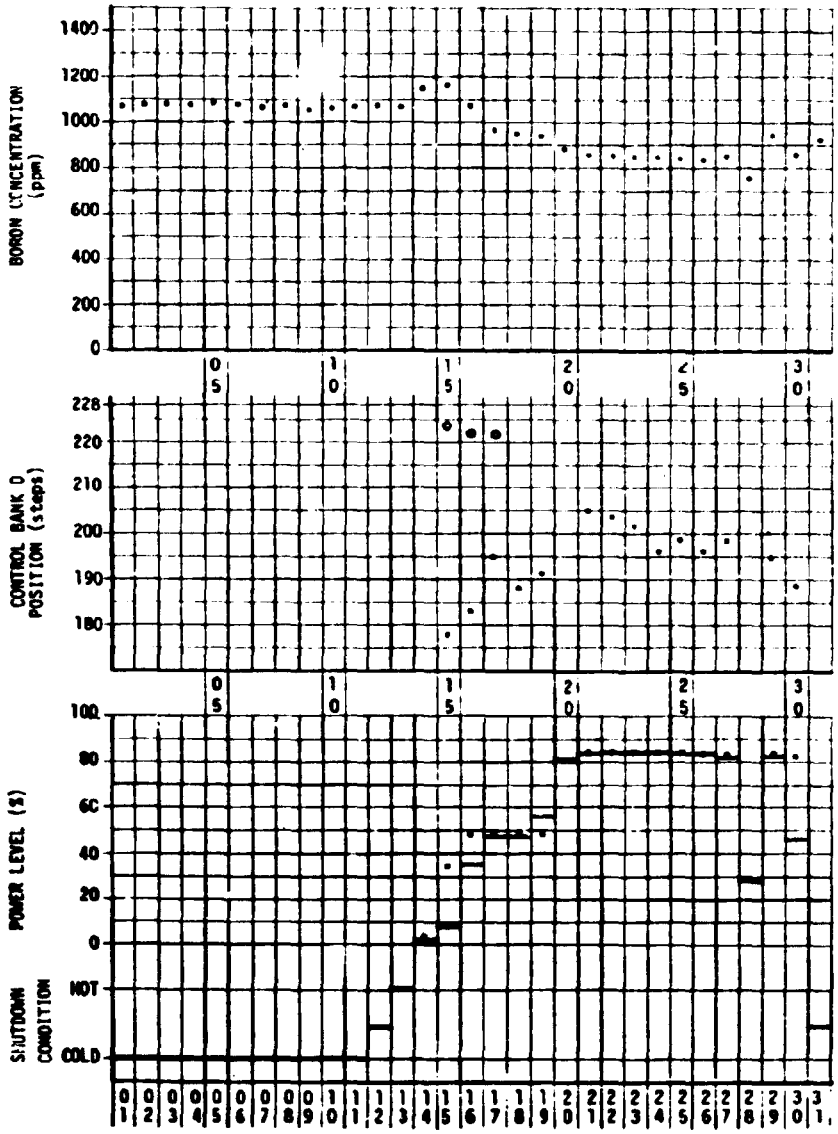

Diagram 3.2.13 Operating History for December 1974

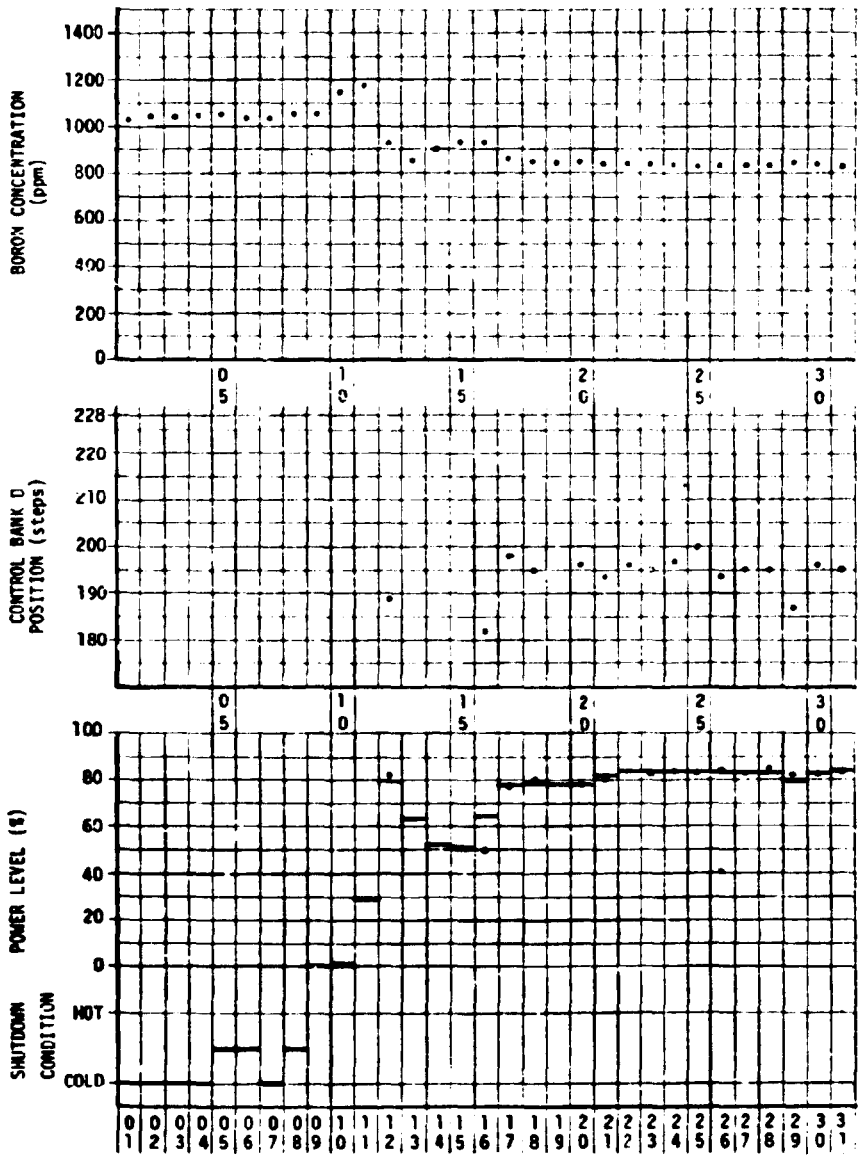

Diagram 3.2.14 Operating History for January 1975

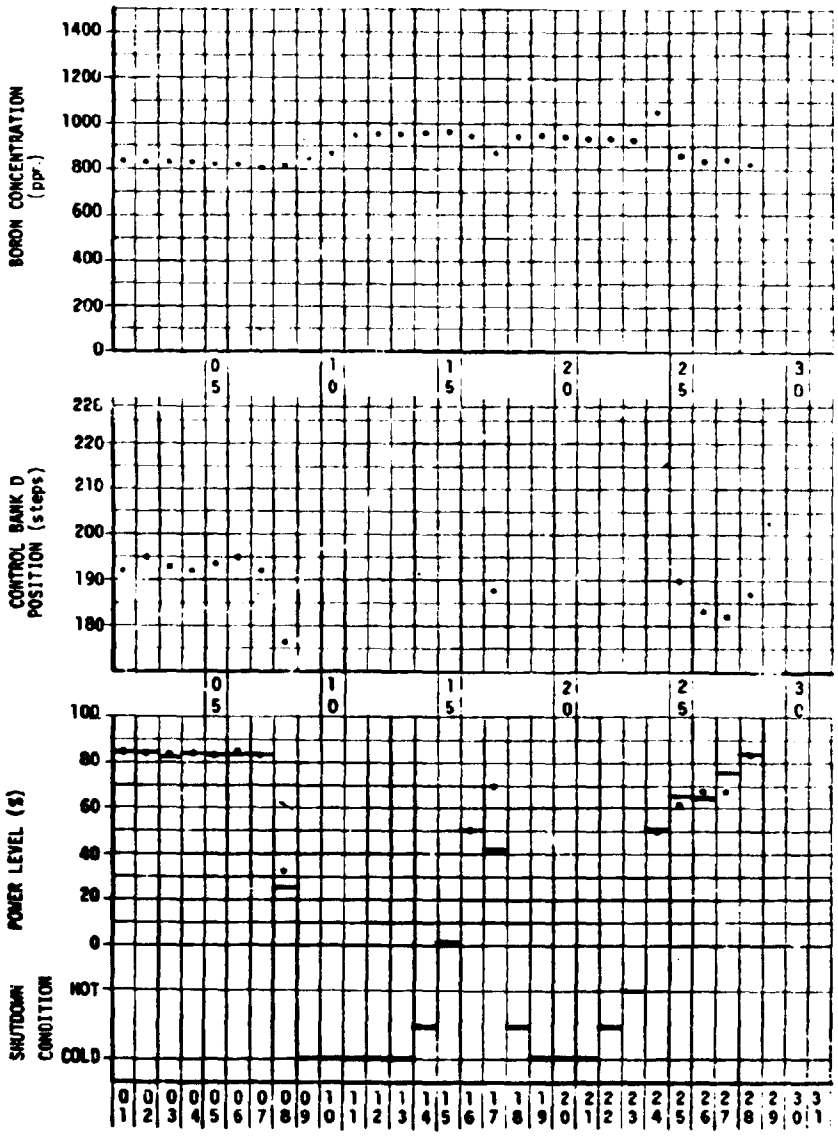

Diagram 3.2.15 Operating History for February 1975

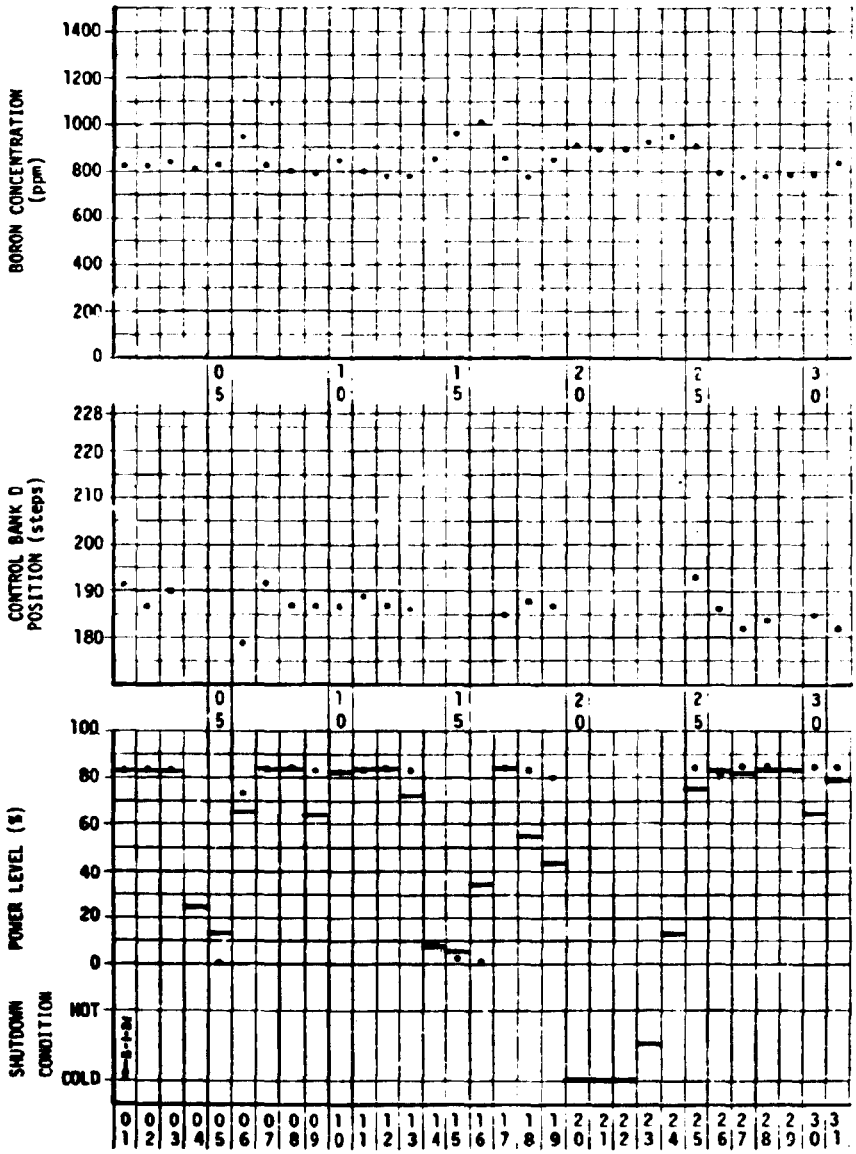

Diagram 3.2.16 Operating History for March 1975

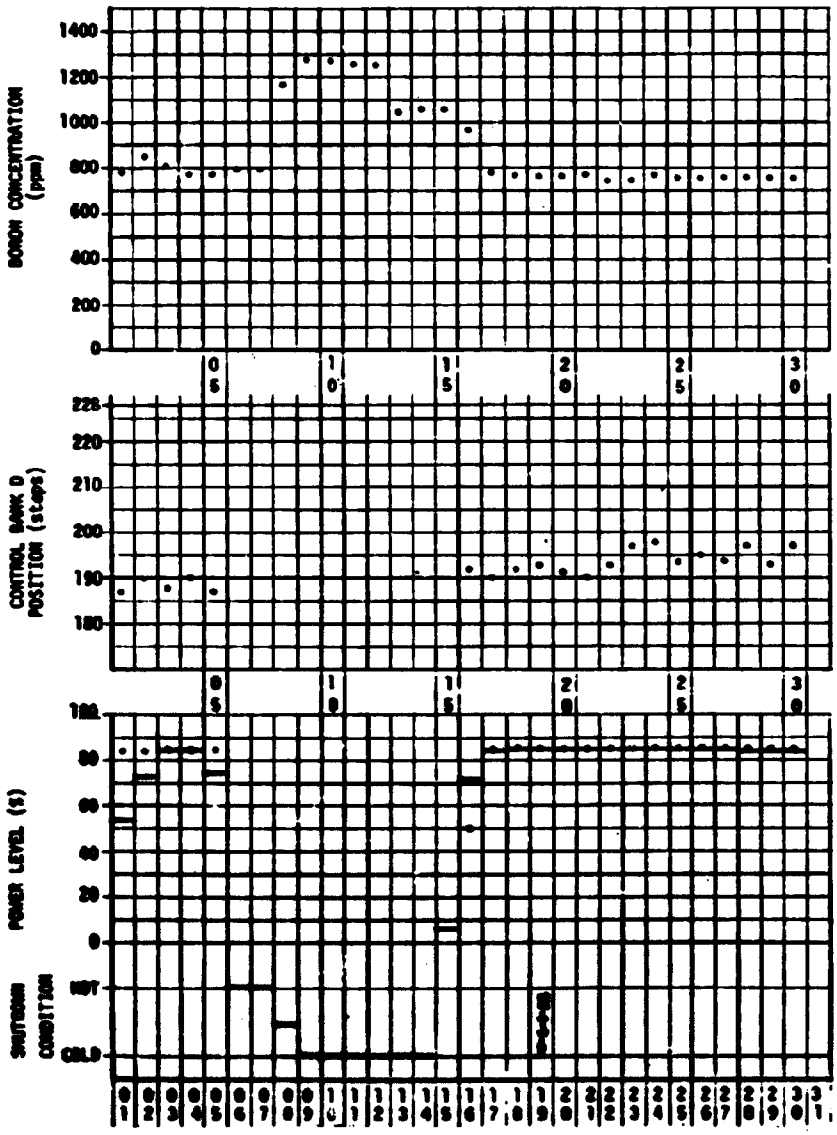

Diagram 3.2.17 Operating History for April 1975

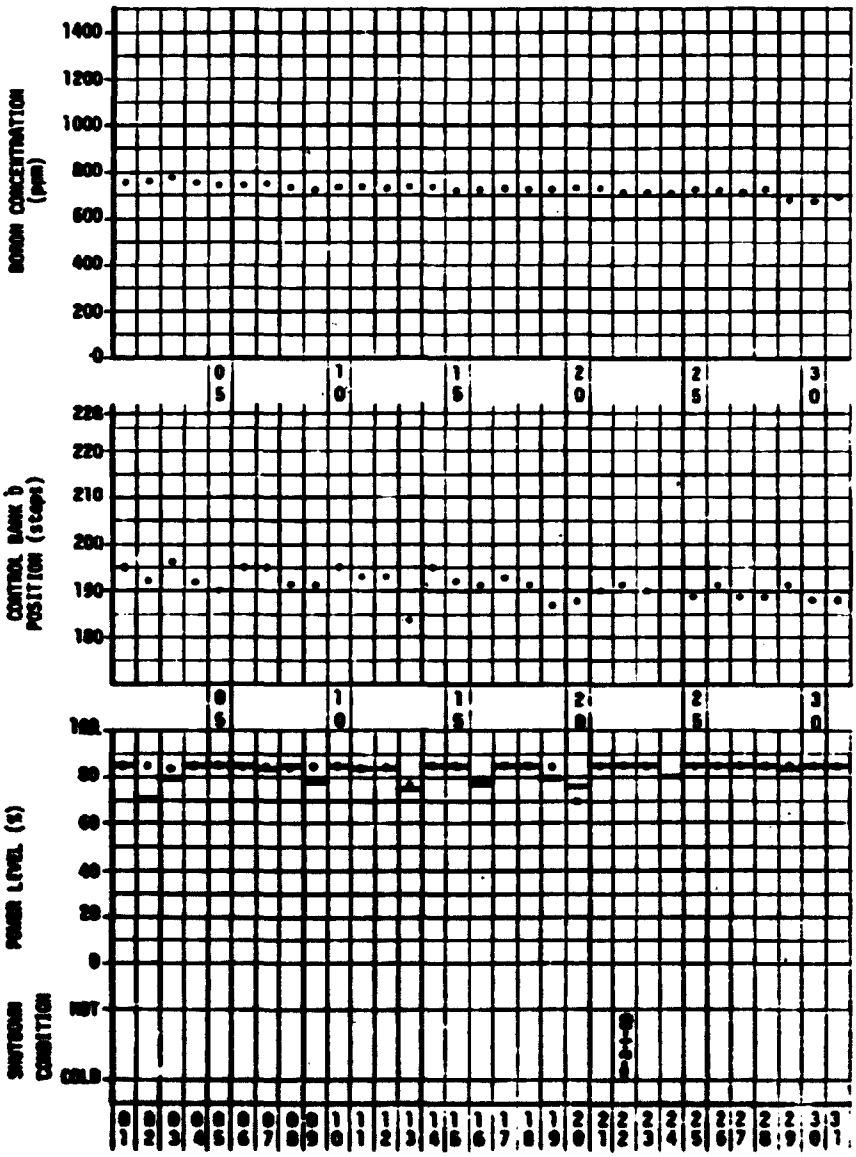

Diagram 3.2.18 Operating History for May 1975

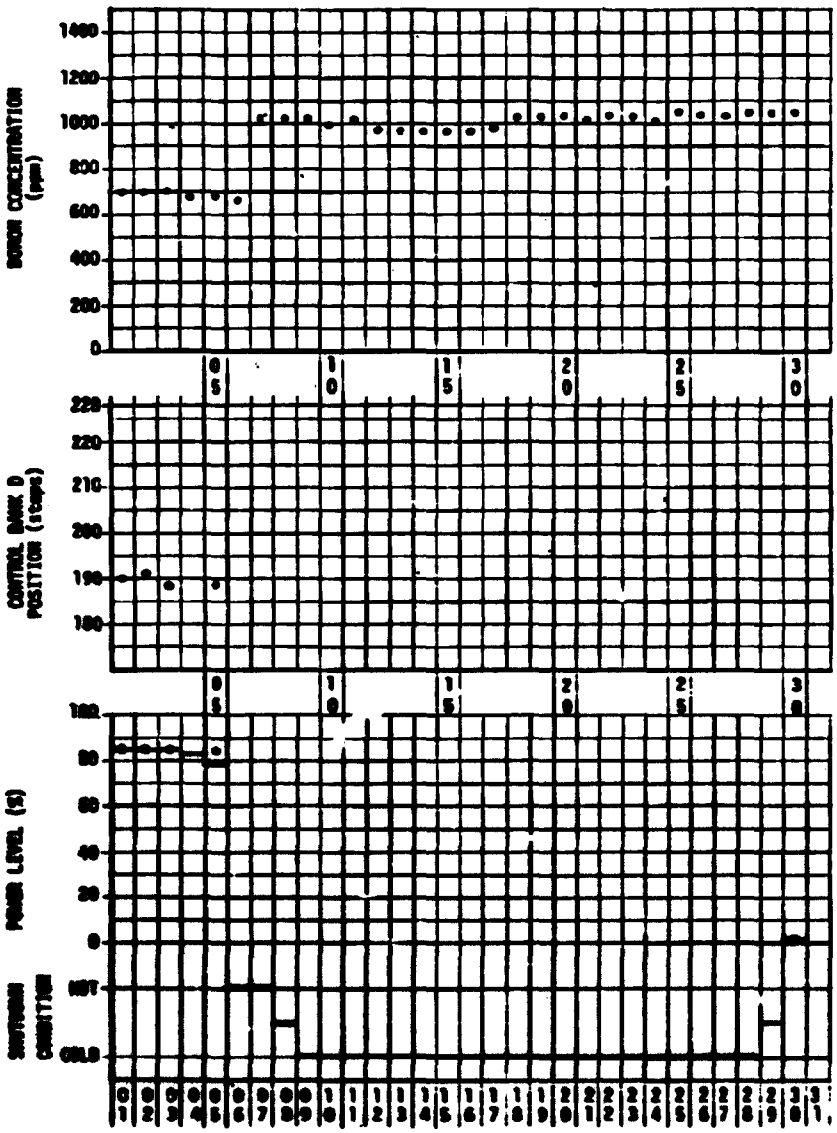

Diagram 3.2.19 Operating History for June 1975

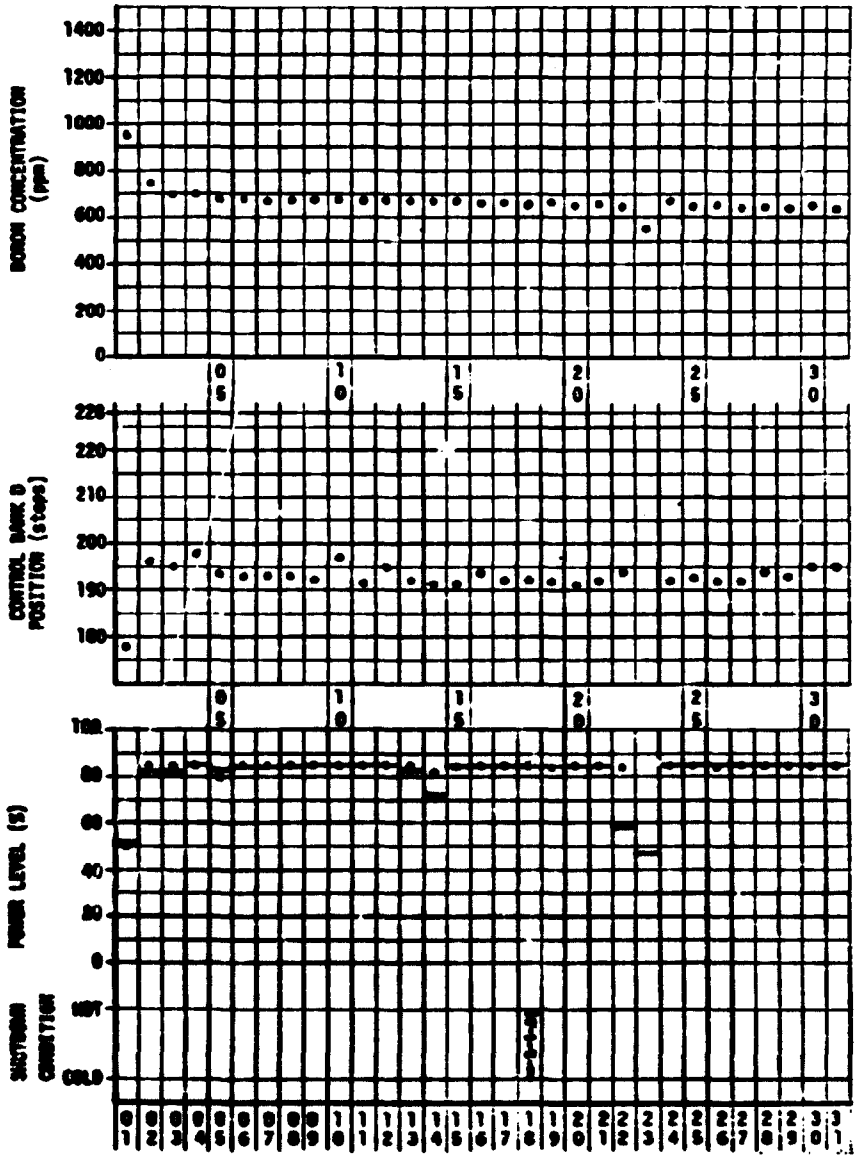

Diagram 3.2.20 Operating History for July 1975

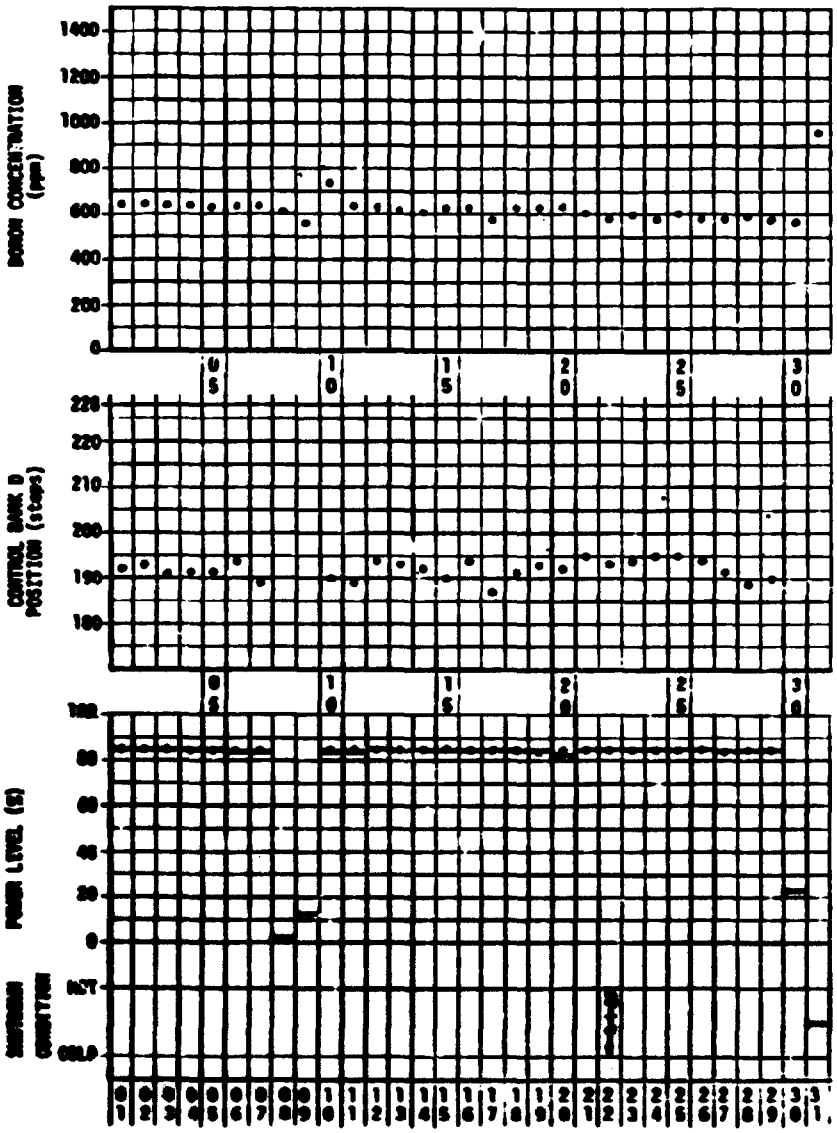

Diagram 3.2.21 Operating History for August 1975

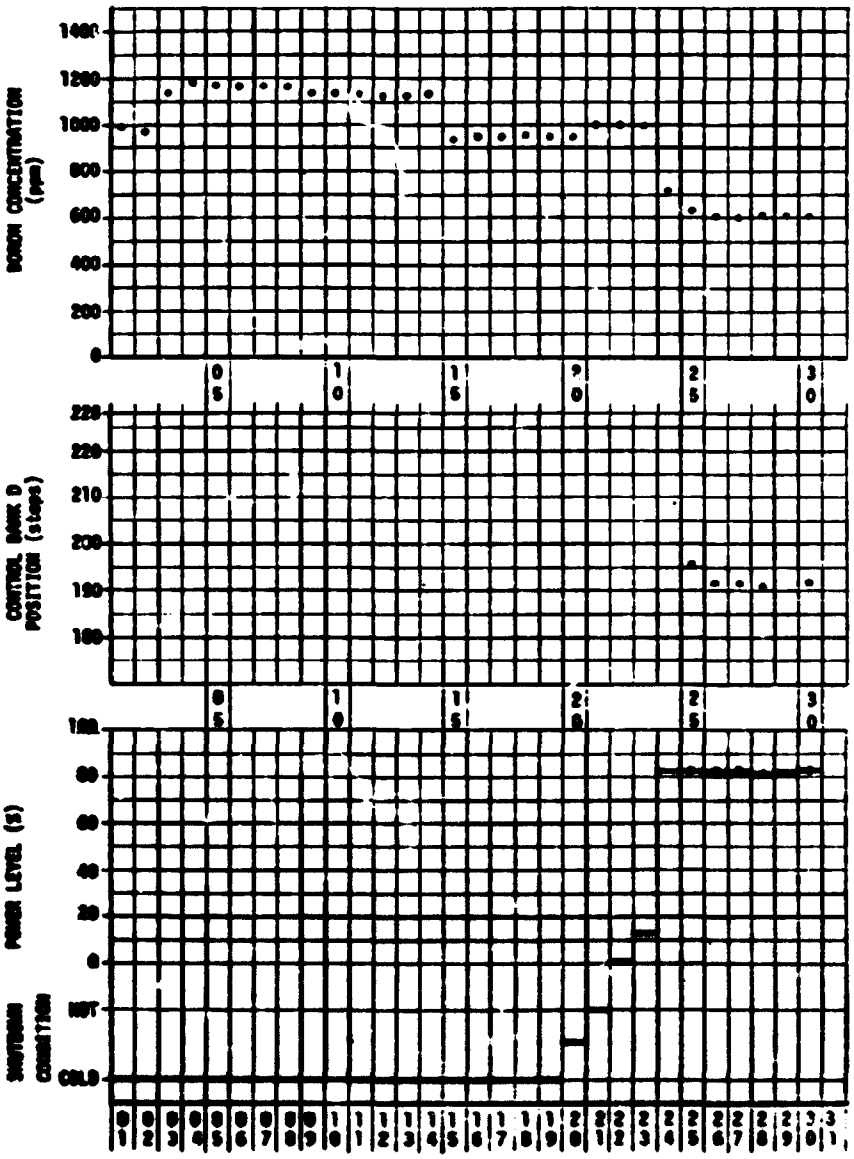

Diagram 3.2.22 Operating History for September 1975

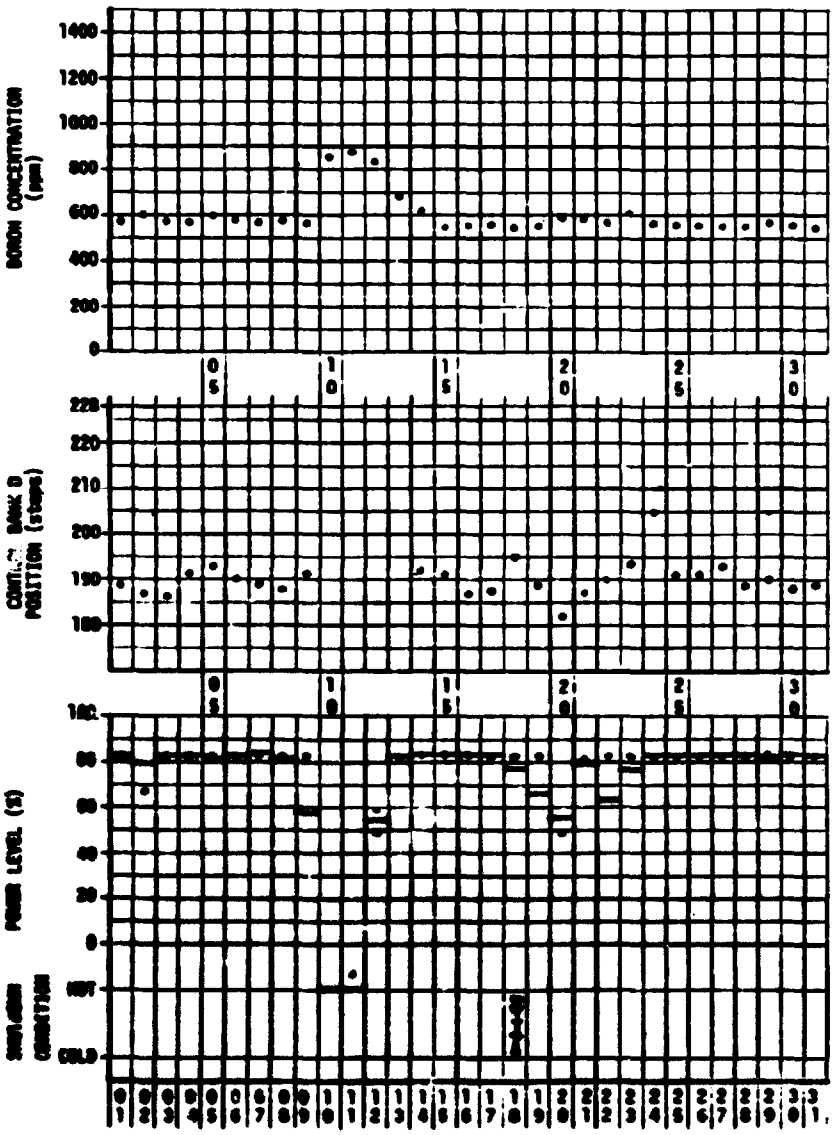

Diagram 3.2.23 Operating History for October 1975

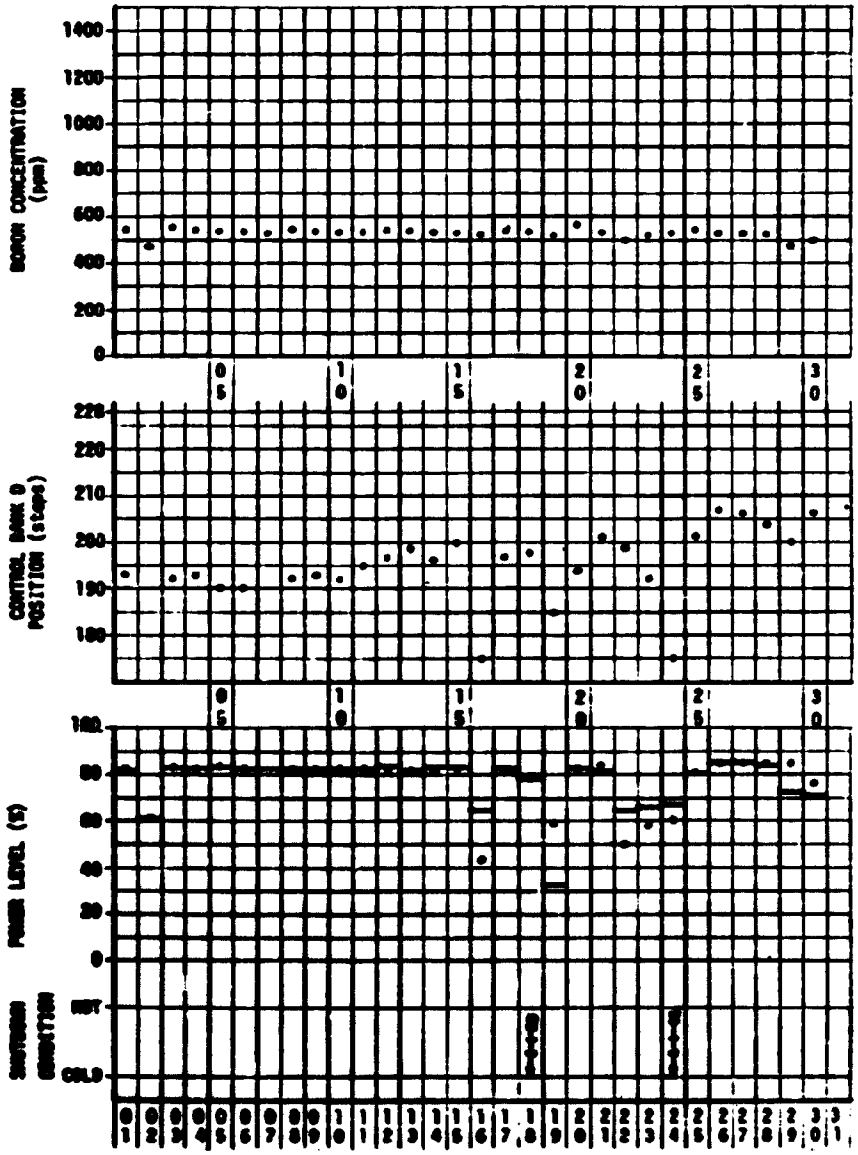

Diagram 3.2.24 Operating History for November 1975

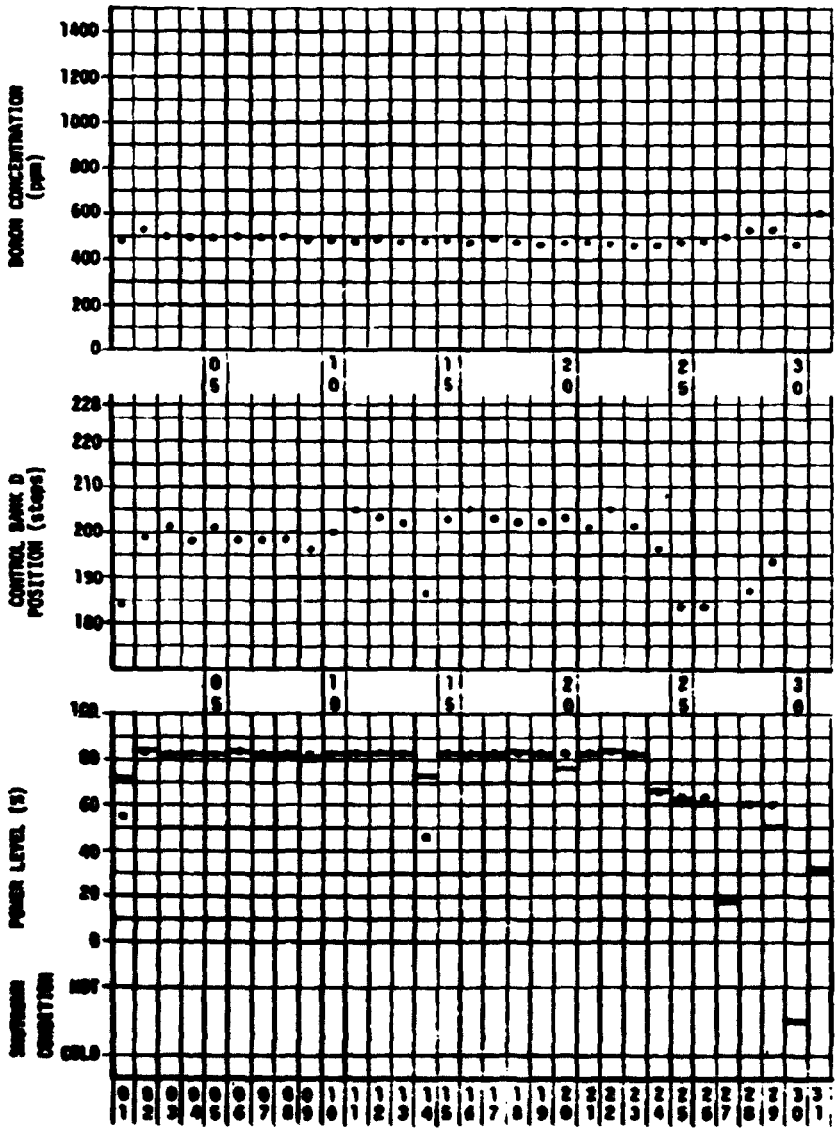

Diagram 3.2.25 Operating History for December 1975

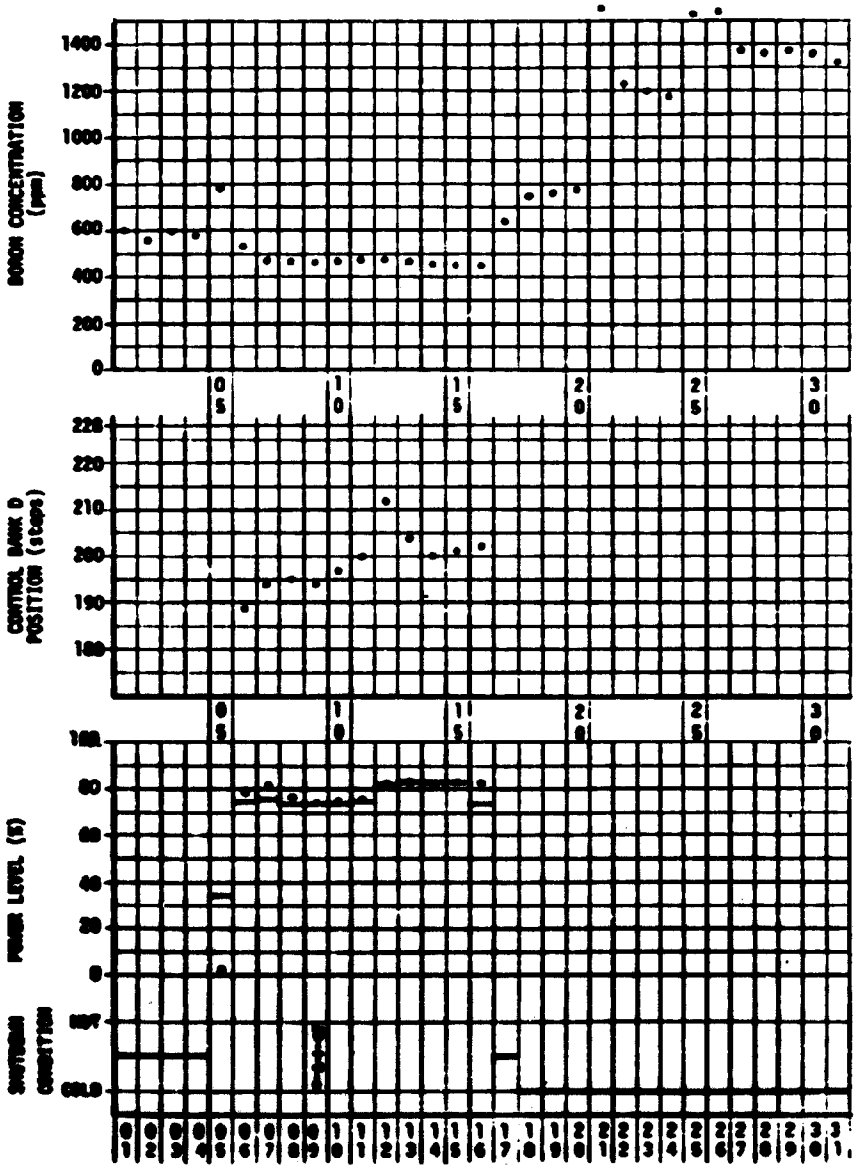

Diagram 3.2.26 Operating History for January 1976

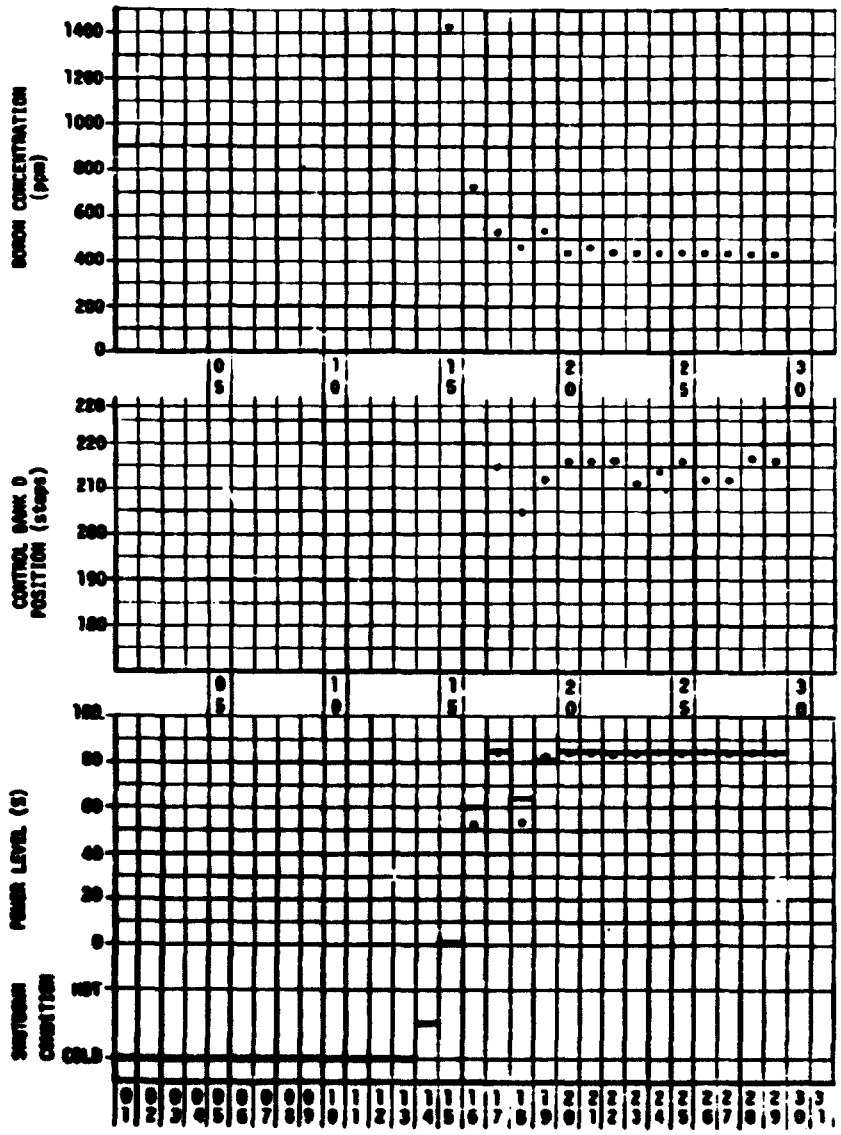

Diagram 3.2.27 Operating History for February 1976

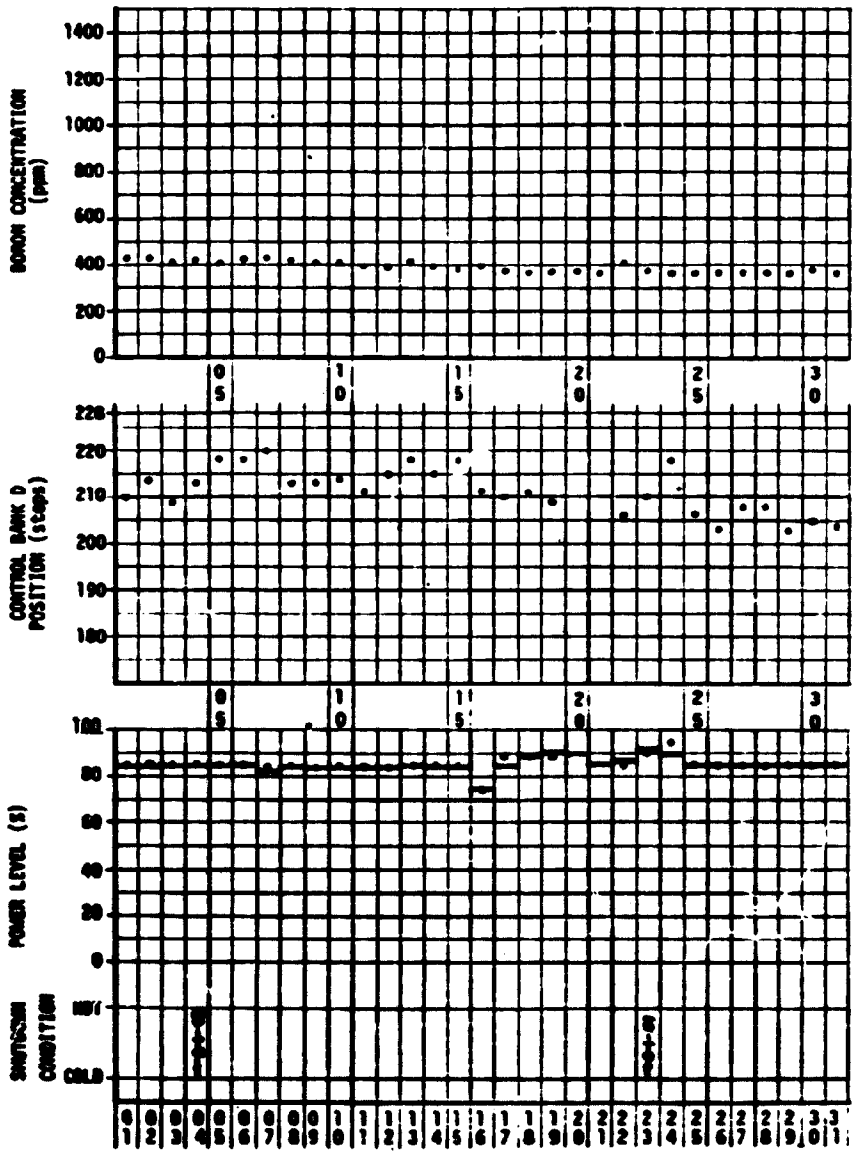

Diagram 3.2.28 Operating History for March 1976

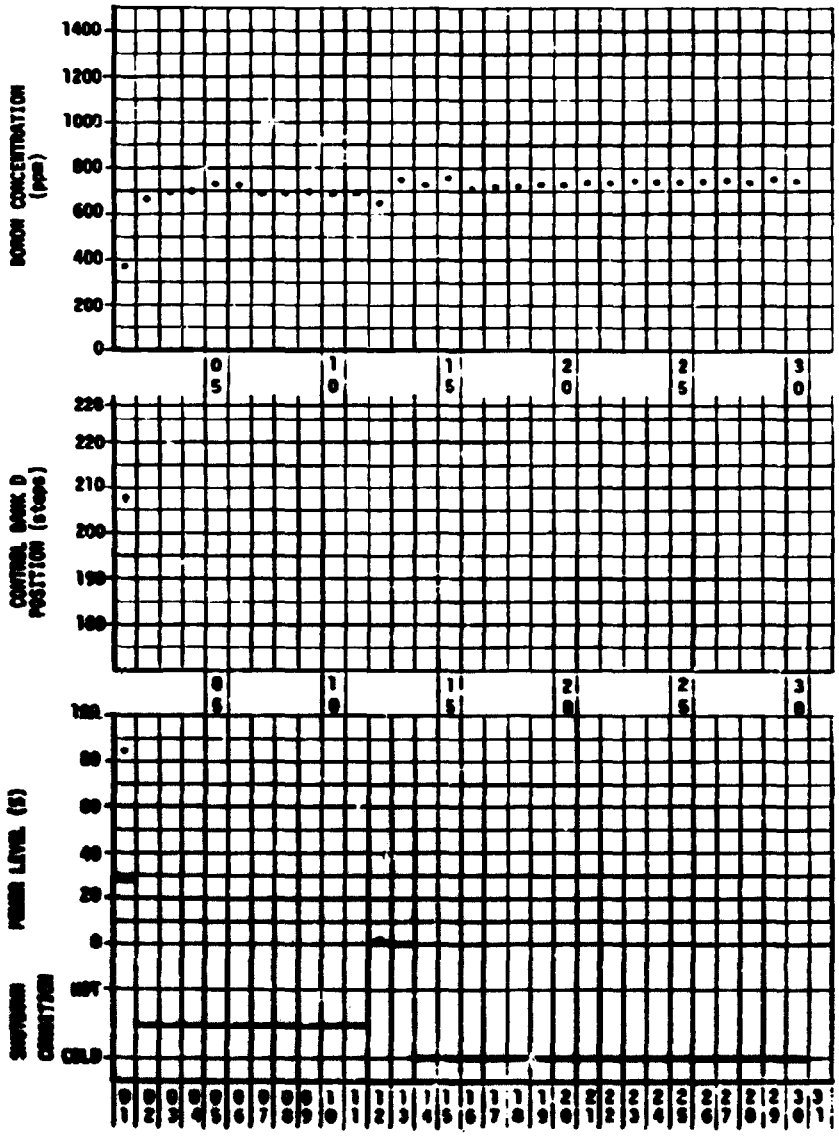

Diagram 3.2.29 Operating History for April 1976

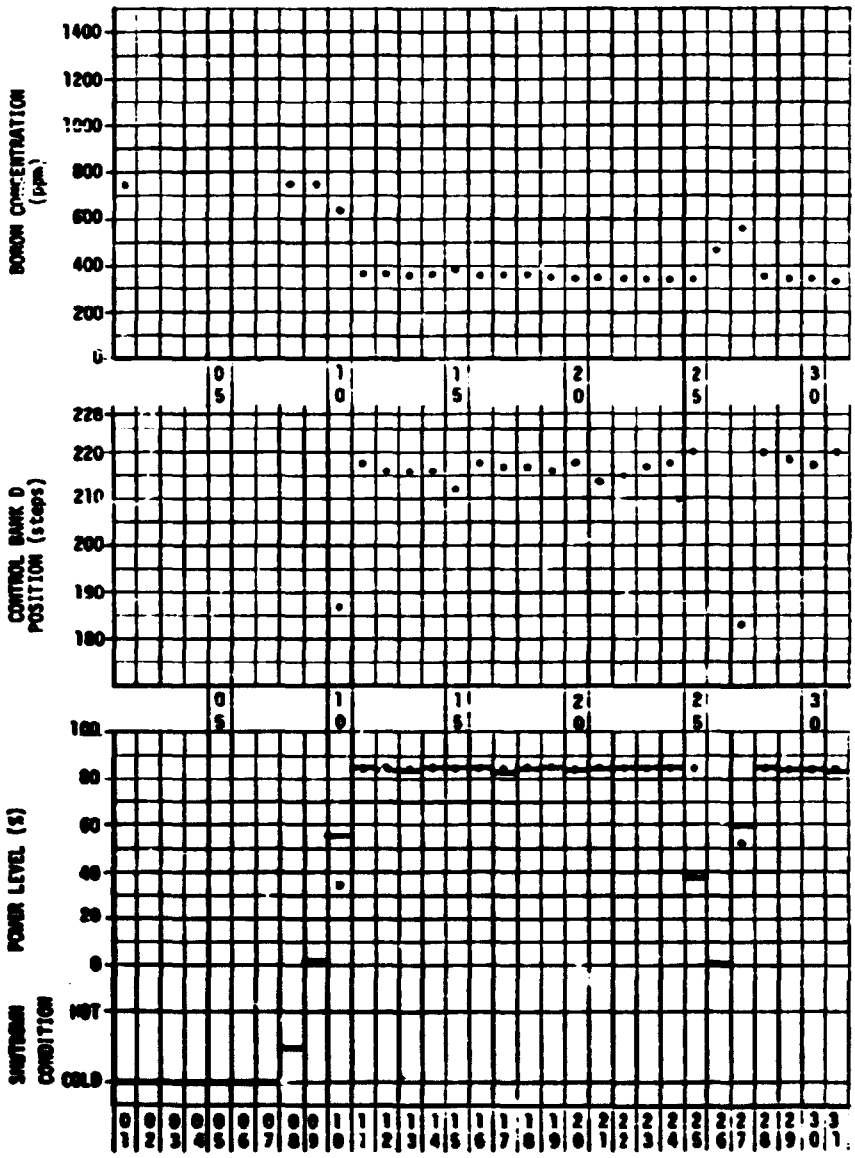

Diagram 3.2.30 Operating History for May 1976

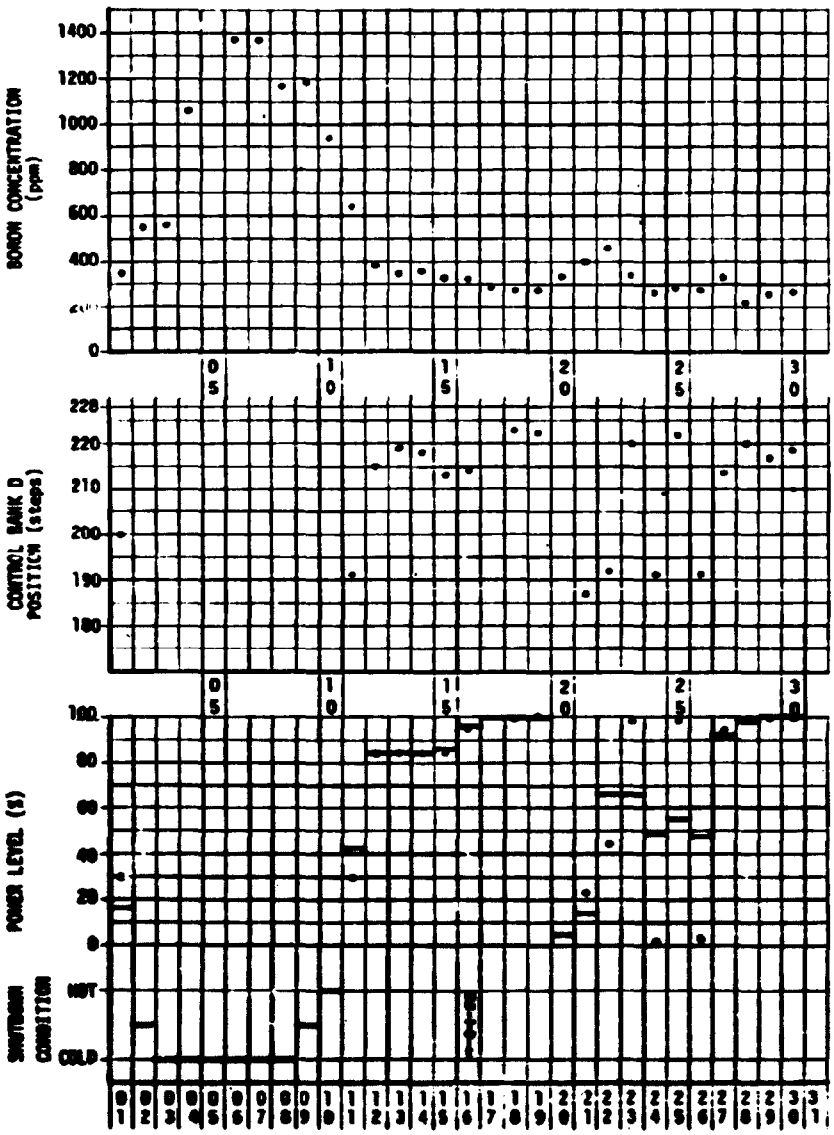

Diagram 3.2.31 Operating History for June 1976

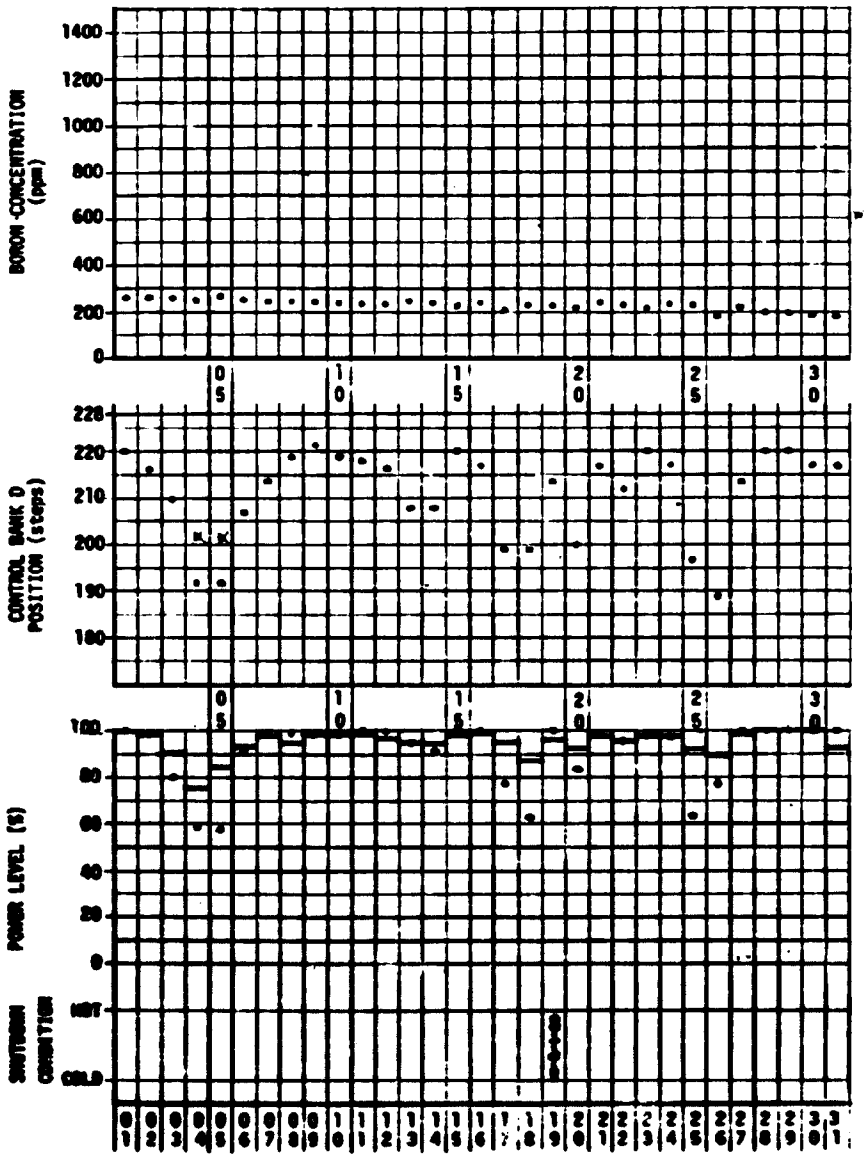

Diagram 3.2.32 Operating History for July 1976

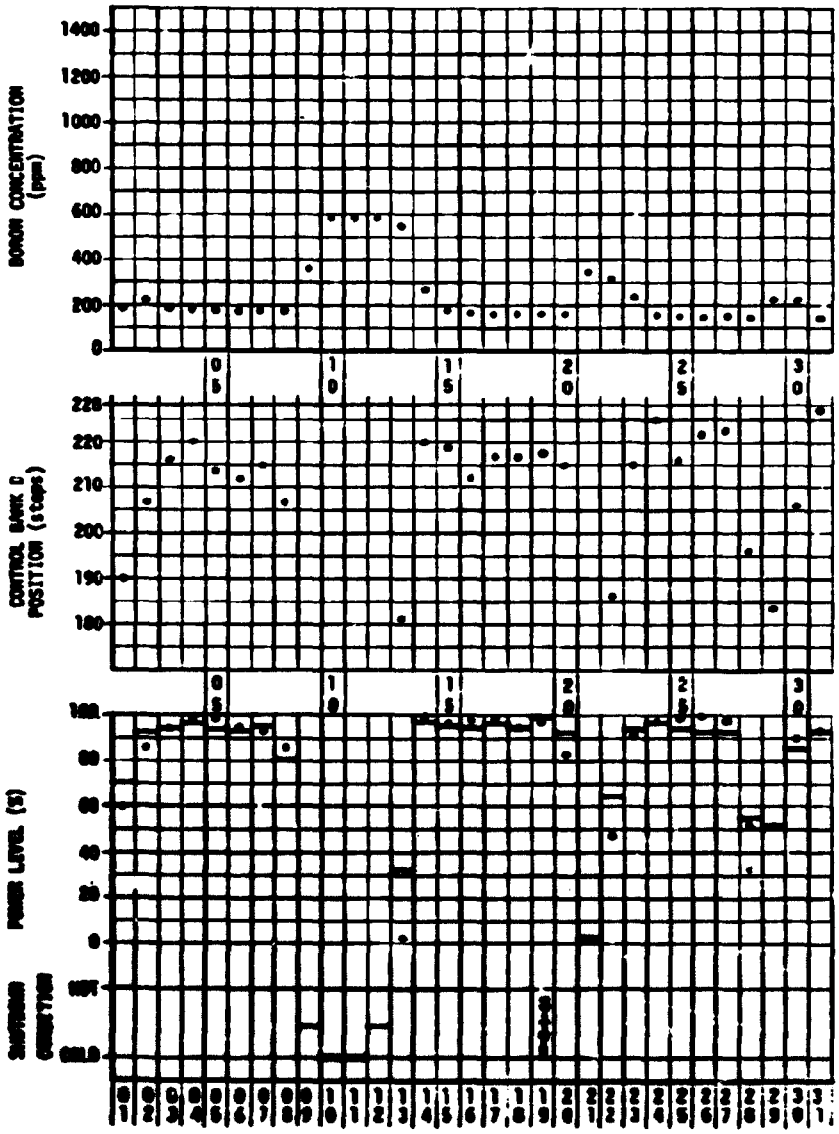

Diagram 3.2.33 Operating History for August 1976

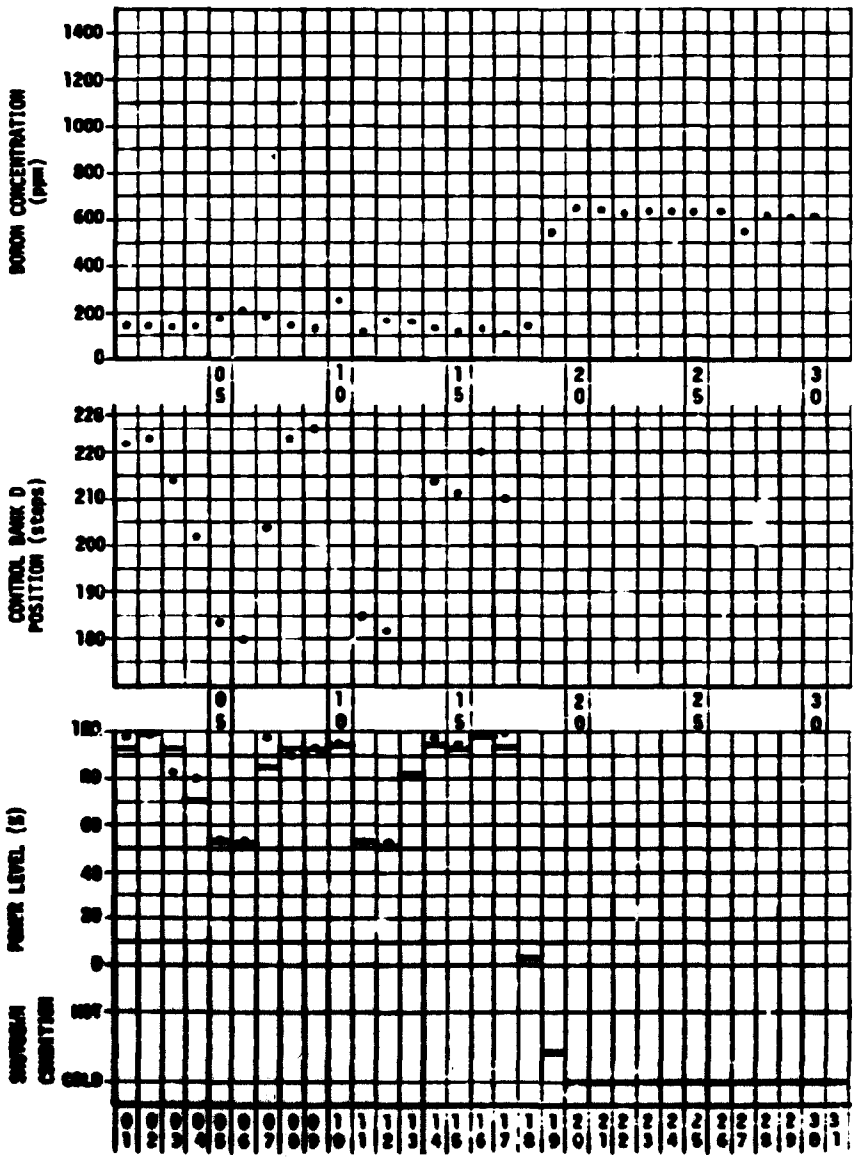

Diagram 3.2.34 Operating History for September 1976

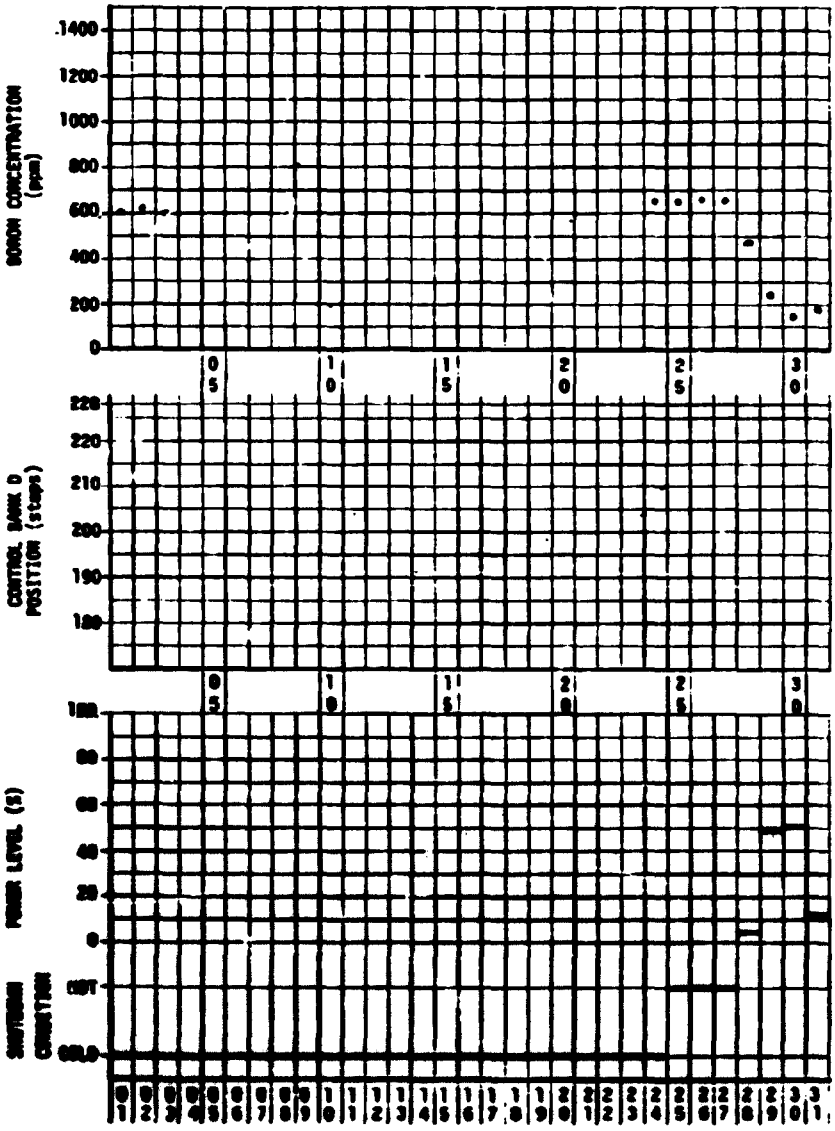

Diagram 3.2.35 Operating History for October 1976

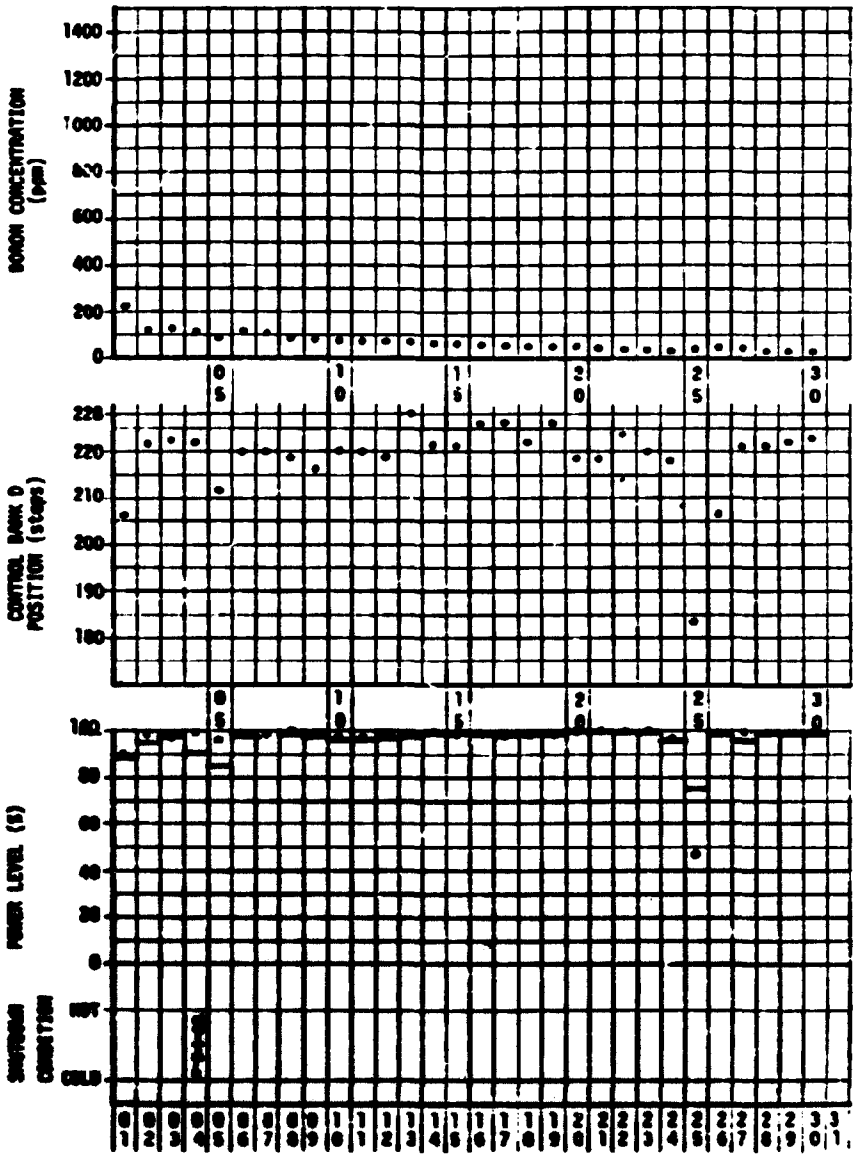

Diagram 3.2.76 Operating History for November 1976

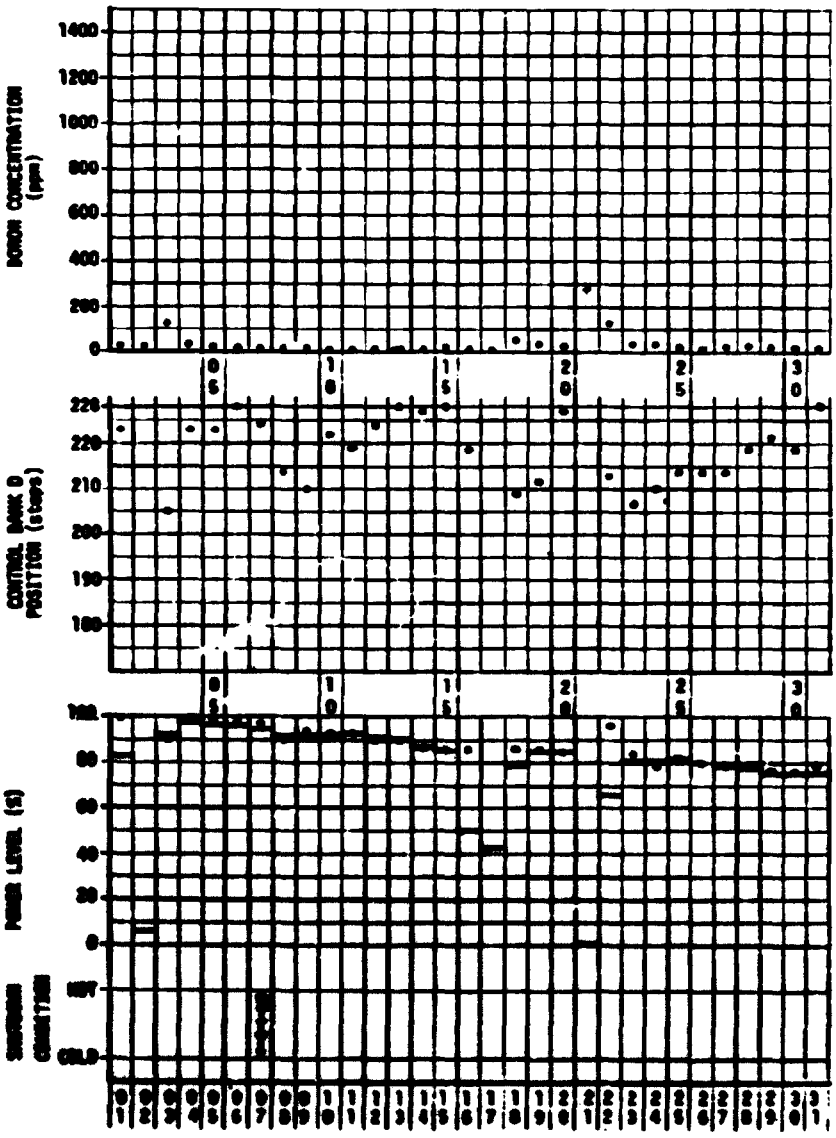

Diagram 3.2.37 Operating History for December 1976

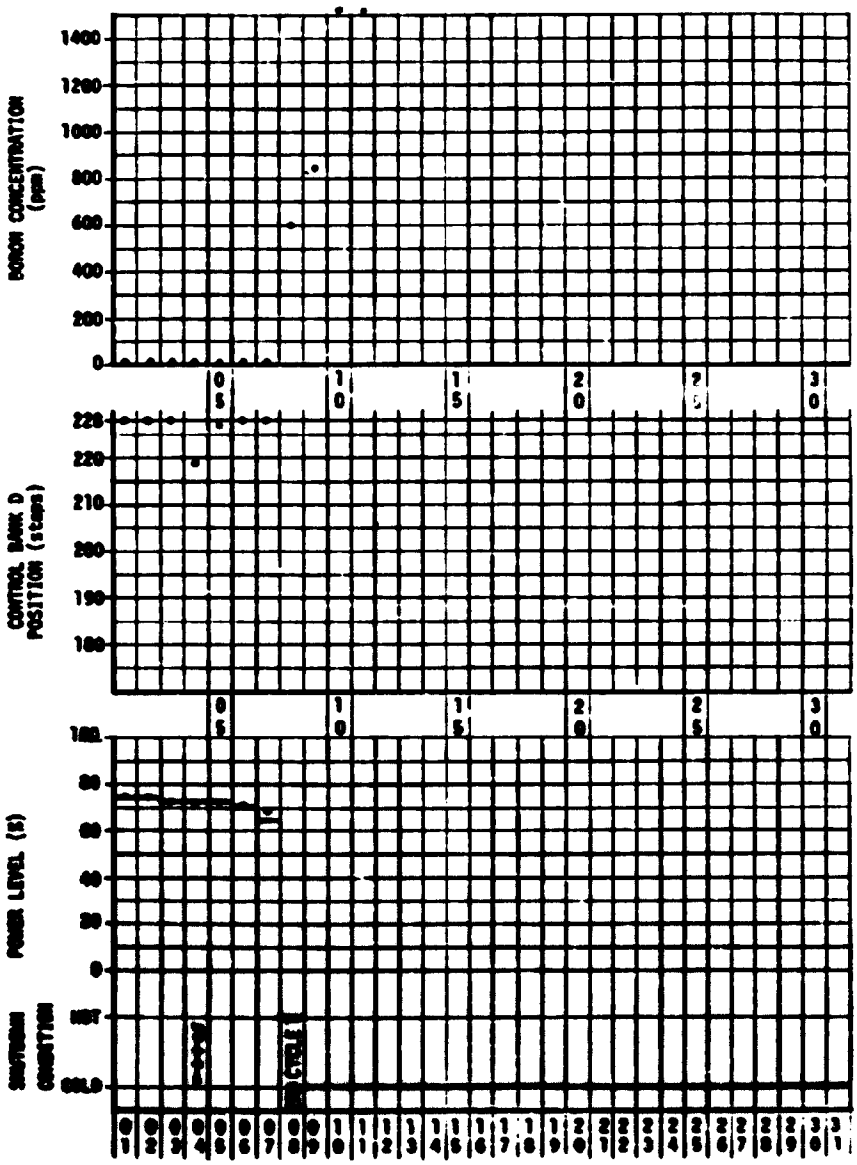

Diagram 3.2.38 Operating History for January 1977

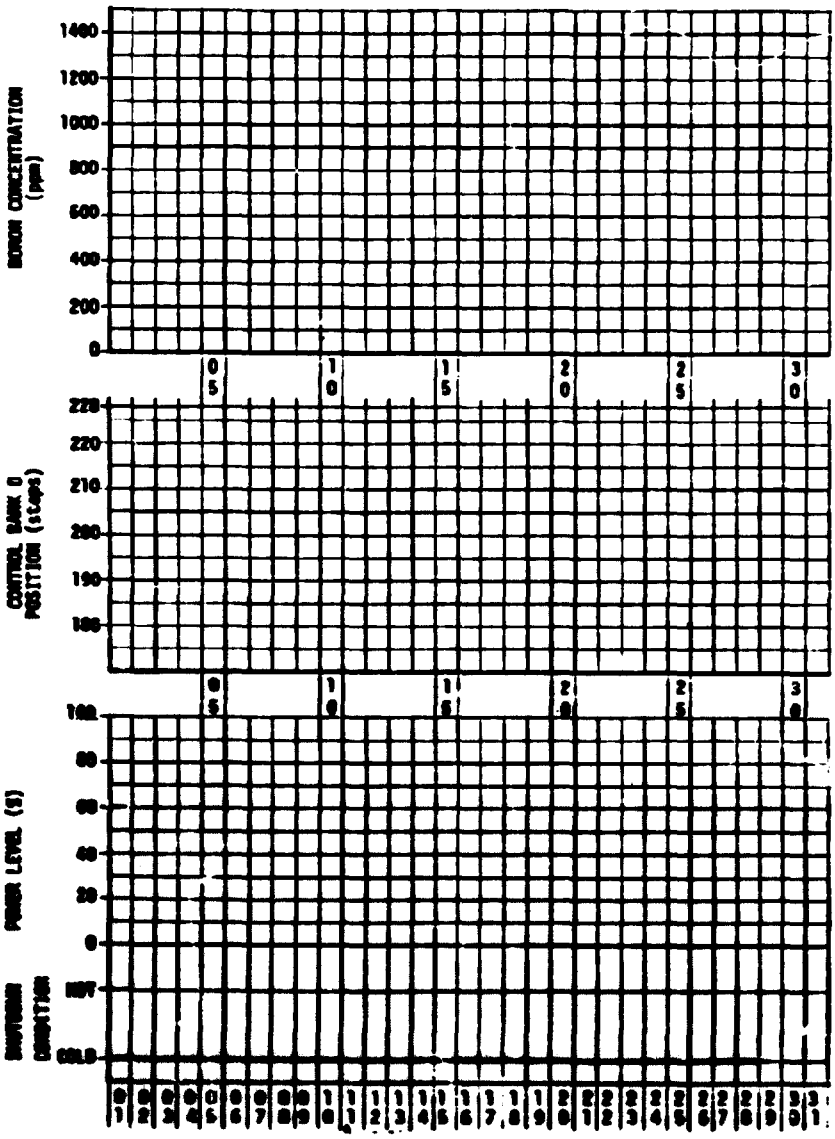

Diagram 3.2.20 Operating History for February 1977

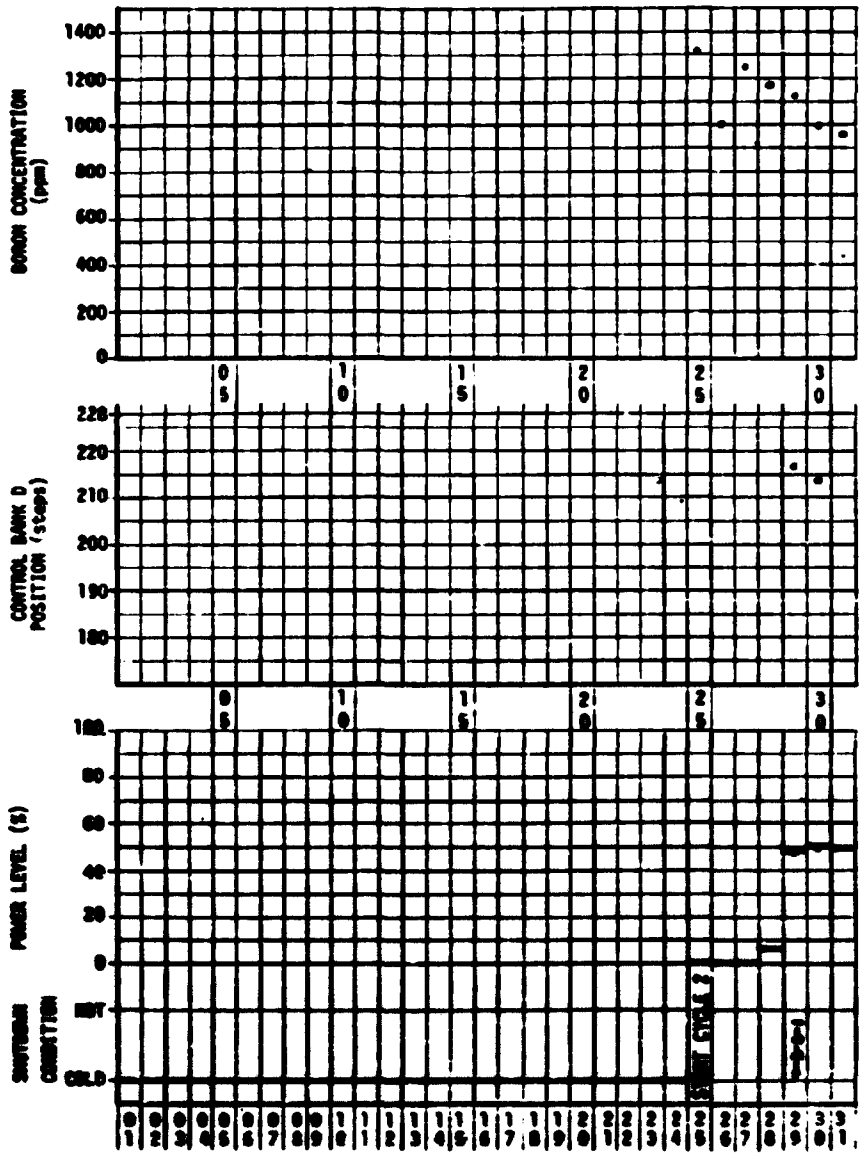

Diagram 3.2.40 Operating History for March 1977

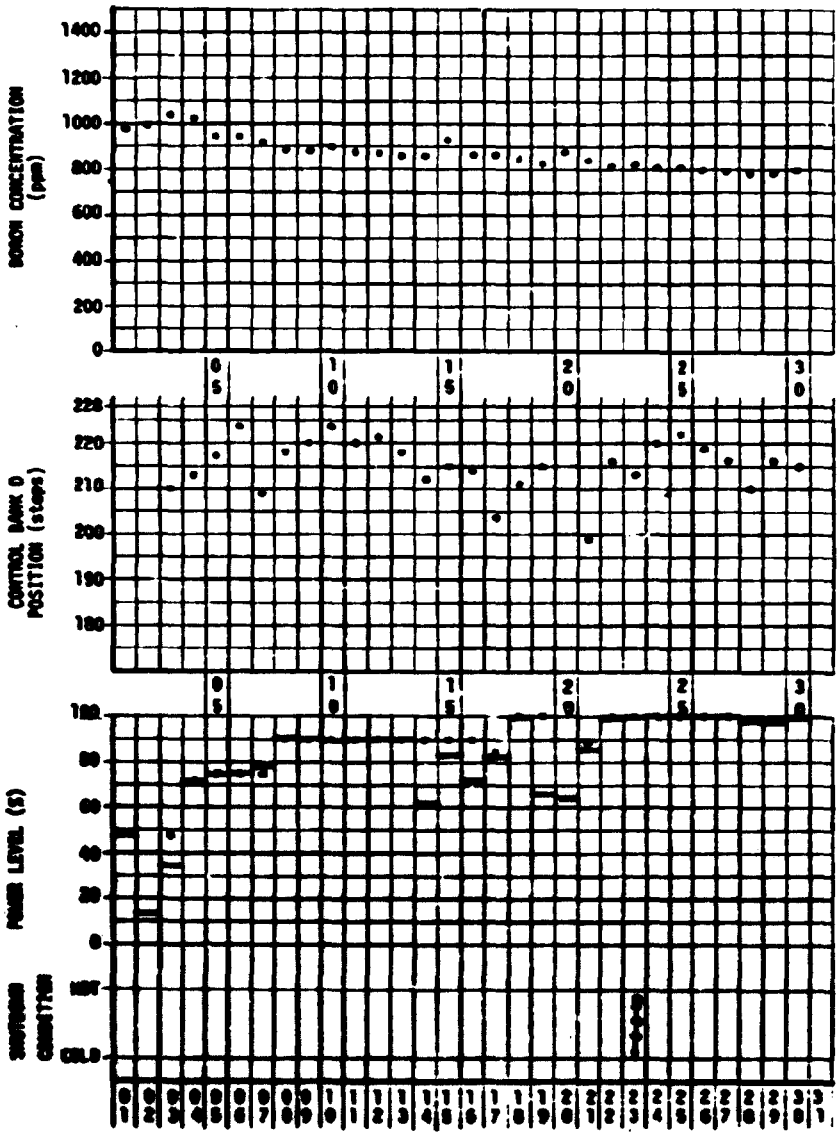

Diagram 3.2.41 Operating History for April 1977

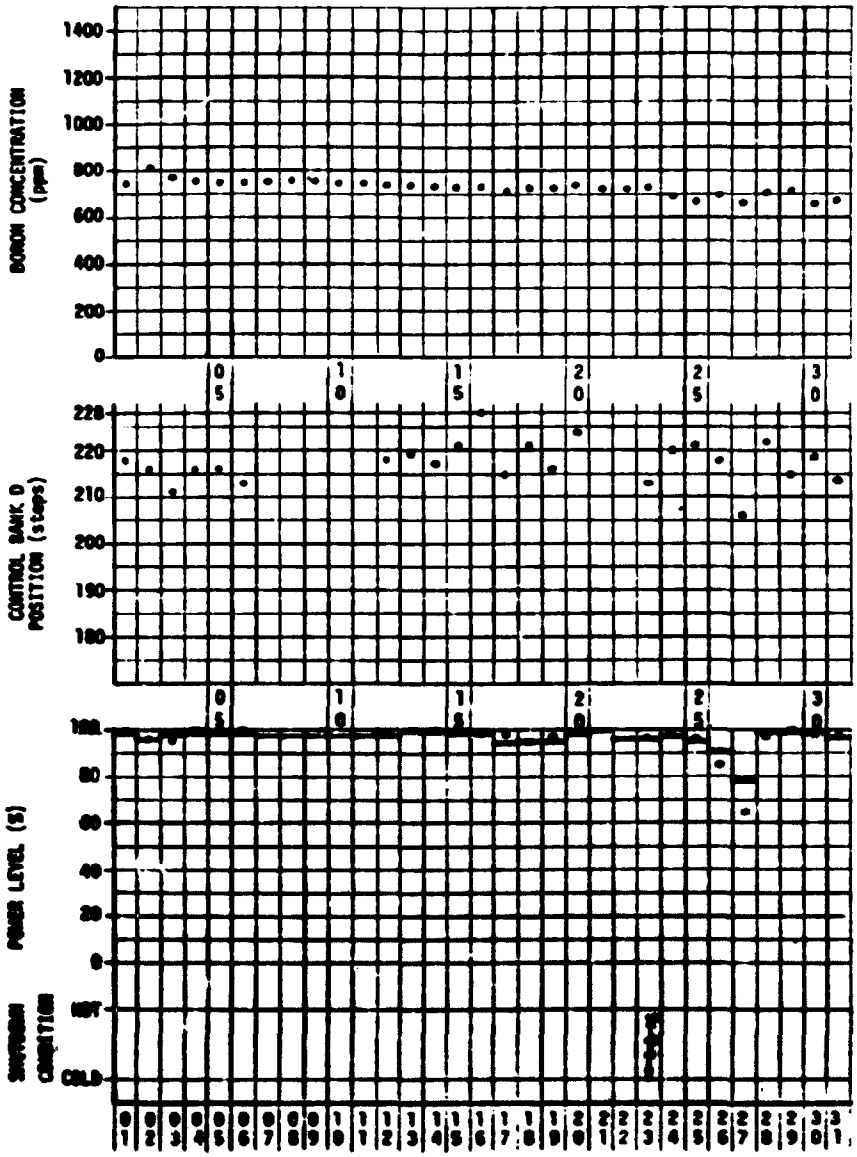

Diagram 3.2.42 Operating History for May 1977

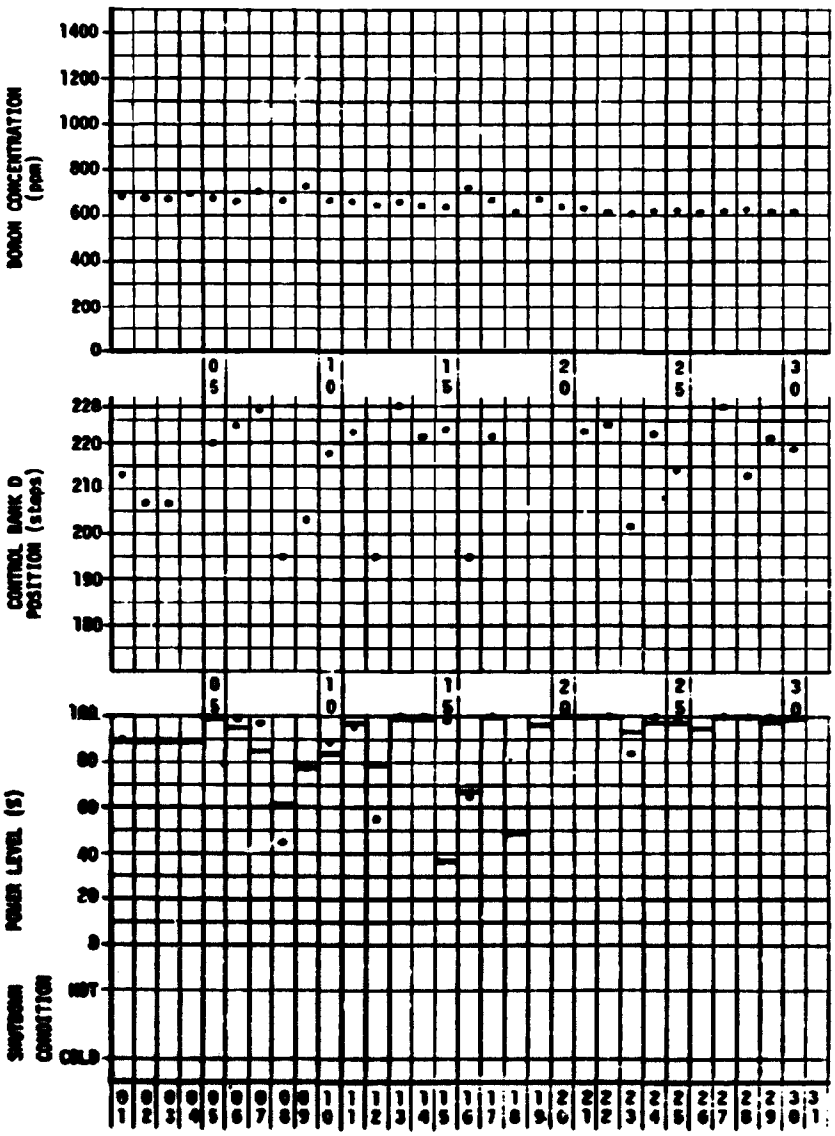

Diagram 3.2.43 Operating History for June 1977

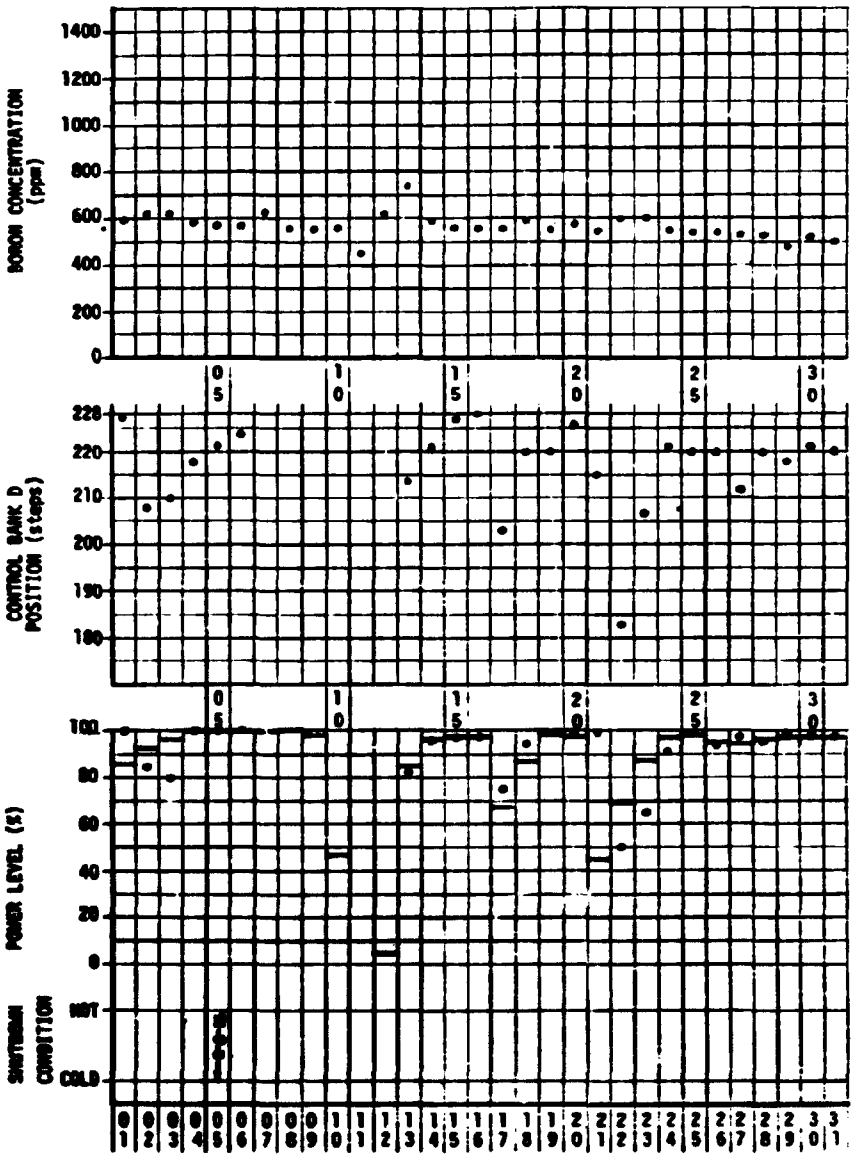

Diagram 3.2.44 Operating History for July 1977

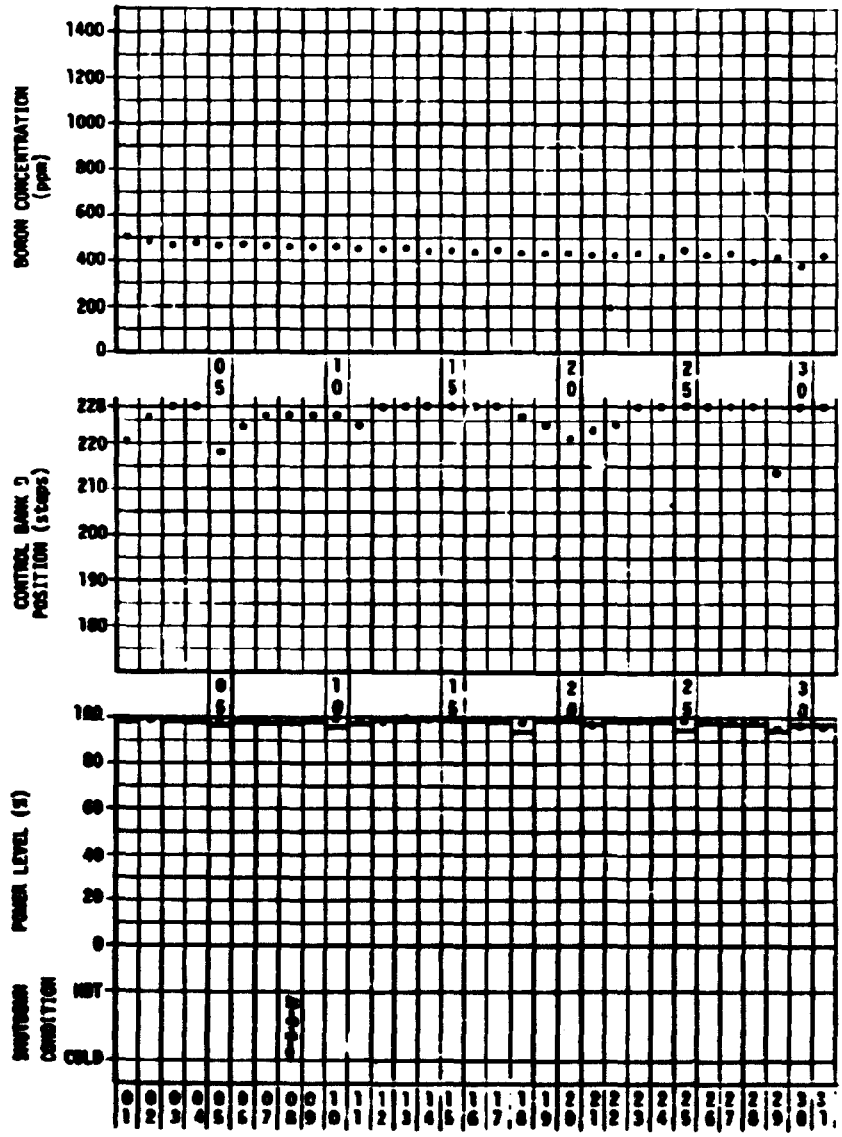

Diagram 3.2.46 Operating History for August 1977

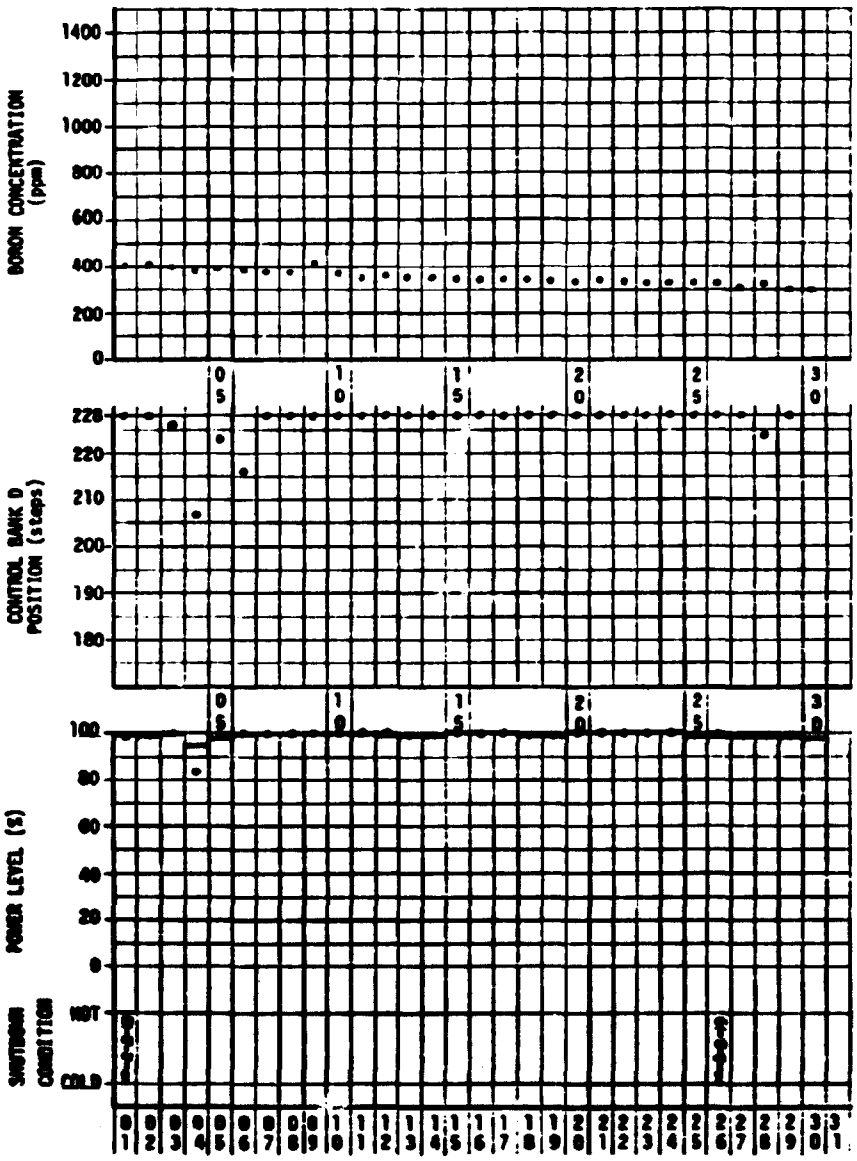

Diagram 3.2.46 Operating History for September 1977

3.3 CORE POWER DISTRIBUTIONS

3.3.1 DESCRIPTION OF THE FULL CORE "FLUX MAPS"

A feature provided in Zion Unit 2 (and in some form in most other power reactors) allows the measurement of the relative axial flux distribution in the central channel of about one-third of the fuel assemblies in the core. From these relative flux measurements three dimensional power distributions can be synthesized with the aid of calculated relative power distribution factors that apply to local regions of the core. A large number of relative flux distributions, so-called "flux maps", were measured during the startup and operation of both Cycle 1 and Cycle 2 of Zion Unit 2 and corresponding three dimensional power distributions and specific power distribution parameters were deduced. From this set of measurements a smaller set of flux maps, representative of the initial conditions and subsequent operating history of each cycle, have been selected. The selected flux maps and the conditions of measurement for each map are listed in Table 3.3.1-1. The results of the measurements constituting this selected set are presented in Sections 3.3.2 and 3.3.3.

The measurement and subsequent power distribution synthesis procedure for each flux map may be summarized as follows:

1) Movable incore detectors (see note) are passed in selected channels from the top to the bottom of the core. During the transit detector signals are monitored and recorded at regular intervals of about 6 centimeters with typically 61 records in a transit. The detectors, moving concurrently, make a number of consecutive passes, each time in different channels, in making a full core flux map. During each pass relevant supplementary data (e.g. core thermal power level, amplifier range settings, etc.) are also recorded.

Note: Reuter-Stokes fission chambers type RS-CB-6201-221

Flux Map	Date	Core Burnup (MWD/MTU)	Power Level (% of 3250 MW^{th})	Bank D Position (steps withdrawn)	Detailed Traces Available
CYCLE 1					
2-1-6	2/19/74	53	25	191	
2-1-7	2/25/74	128	35	181	
2-1-9	3/18/74	273	50	208	yes
2-1-26	9/21/74	753	48	203	
2-1-27	10/07/74	1036	73	210	
2-1-29	11/14/74	1602	82	200	yes
2-1-31	3/01/75	3363	83	188	
2-1-32	4/19/75	4229	85	193	
2-1-33	5/22/75	5253	85	193	
2-1-34	7/18/75	6242	85	191	
2-1-35	8/22/75	7269	85	193	
2-1-37	10/18/75	8188	81	196	
2-1-38	11/18/75	9099	84	199	
2-1-42	11/24/75	9246	84	195	
2-1-47	1/09/76	10376	74	196	
2-1-48	3/04/76	11132	84	218	
2-1-51	3/23/76	11736	94	220	
2-1-53	6/16/76	12814	94	212	
2-1-60	7/19/76	13856	98	214	
2-1-61	8/19/76	14785	96	220	
2-1-62	11/04/76	15831	92	212	
2-1-63	12/07/76	16989	97	219	yes
2-1-65	1/04/77	17784	73	219	yes
CYCLE 2					
2-2-1	3/27/77	11710	5	226	
2-2-10	4/23/77	12399	99	225	yes
2-2-12	5/23/77	13498	96	213	
2-2-16	7/06/77	14949	99	221	
2-2-17	8/08/77	16049	99	226	
2-2-18	9/01/77	16928	100	219	
2-2-19	9/26/77	17854	99	228	

TABLE 3.3.1-1 Conditions of Measurement of the Flux Maps Selected

2) The raw digitized traces obtained from the individual detectors in successive passes are adjusted, trace by trace, to account for differences in measured individual detector sensitivities and background levels, in observed amplifier gain settings and in observed core thermal power level. The presence of the structural grids in the fuel assemblies causes marked local depressions in neutron flux and in the movable detector response signals as the detectors pass the grids. Since the axial locations of the grids in all fuel assemblies in the core in both cycles are the same, the grid-induced depressions in the digitized traces are used as reference points to insure axial alignment among the traces and to locate the top and bottom of the active fuel regions. In the event that the grid-induced depressions of a given trace fail to line up with those of the other traces that trace is shifted by deleting recorded values of detector response at one end and adding extrapolated values at the other end until alignment is achieved. The axial shift, when necessary, usually does not exceed one point and very rarely exceeds two points. The resultant adjusted digitized traces are then on a consistent basis and represent a multi-channel map of the core flux distribution in relative units.

3) The adjusted digitized traces are integrated axially over regions of the core defined by the insertion of the controlling bank of control rods to yield the so-called "reaction rate integrals". The region-wise reaction rate integrals of adjusted detector responses can then be compared to calculated relative values of the core flux distribution in x-y planes corresponding to the unrodded and rodded regions as a test of the agreement of prediction with measurement.

4) In each successive x-y plane of the core, corresponding to consecutive matching points of the adjusted digitized traces, the overall x-y power distribution is synthesized by applying calculated relative power distribution factors to the adjusted relative flux values. The relative power distribution factors are on both an assembly-wise basis for all assemblies in the core and on a single fuel rod basis for a number of potentially limiting individual fuel rods.

5) The synthesized assembly-wise powers in the successive x-y planes are integrated axially to give relative assembly powers, and are then summed in the x-y sense to give a total core power value. The total core power value is used to evaluate the relative assembly power ratios (the ratio of the power generated in each specific assembly in each axial region to the average assembly power in that region) and to scale the relative power values, both assembly-wise and for individual fuel rods, to a specified total core thermal power output.

6) Subsequent analysis provides edits of kilowatt per foot values in anticipated limiting fuel rods, quadrant tilt factors, core average axial power distributions, specific and core average axial offset values and so on.

Of immediate interest here are:

- the relative region-wise reaction rate integrals, in that these provide virtually direct measurements of the relative flux distribution in each axial region of the core;
- the core average axial power distribution which, at least in a relative sense, is representative of a nearly direct measurement of the dominant axial power shape;

-the inferred relative assembly-wise powers (the "inferred $F_{\Delta H}$ or FDHN" values) which depend in part on calculated values of the relative power distribution factors, but are nonetheless essential if assembly-wise or region-wise burnups are to be evaluated.

Section 3.3.2 consists of diagrams and tabulations of the above three power distribution parameters extracted from off-site, computed aided analysis of each of the full core flux maps listed in Table 3.3.1-1. In all cases the analyses were performed by Commonwealth Edison personnel. Included with each summary is an hour by hour histogram of core thermal power level and control bank position for a period of approximately 48 hours preceding the mapping operation so that flux maps generated under nominally steady state conditions can be segregated from those obtained before steady state conditions were established.

In Section 3.3.3 the individual adjusted digitized traces for five representative flux maps (2-1-9, 2-1-29, 2-1-63, 2-1-65 and 2-2-10) are listed. These traces have been adjusted to compensate for differences in detector sensitivities and background levels, amplifier gain settings and core thermal power levels in successive passes and, where necessary, individual traces have been shifted axially by one or two points to align as closely as possible the local depressions in flux and detector signal caused by the fuel assembly grids.

3.3.2 SUMMARY OF FULL CORE FLUX MAP RESULTS

The following tabulations and plots are derived from off-site computer-aided processing of the movable detector response signal traces obtained in flux mapping operations during Cycles 1 and 2 of Zion Unit 2. In the average axial conditions tabulations point 1 corresponds to the top of the active fuel region, point 61 to the bottom of the active fuel region. As noted above

determination of the inferred $F_{\Delta H}$ values requires the use of analytical relative power distribution factors that are derived from two dimensional, two group diffusion theory (PDQ) calculations of the core x-y power distribution. In many cases, especially in the earlier flux maps of the series summarized here, control bank D was inserted far enough into the core to have a significant effect on the x-y power distribution in the rodded region of the core. Under these conditions two sets of relative power distribution factors derived from PDQ calculations of the core x-y power distribution with control bank D inserted and with no control rods inserted, respectively, were used to translate the reaction rate integrals in the rodded and the unrodded regions of the core into assembly and individual fuel rod power levels. Since the two sets of reaction rate integrals are treated somewhat differently both sets are included wherever appropriate in the flux map summaries. If control bank D is considered to have had negligible effect on the measured and synthesized power distributions only the total reaction rate integrals (which are equivalent to the unrodded region integrals) are tabulated.

Since the x-y power distribution in the core changes continually with burnup it is necessary periodically to update the values of the relative power distribution factors to account for burnup effects. Certain of the flux maps for which results are given below were obtained at stages of burnup that were intermediate between the reference burnup values for which sets of relative power distribution factors were available. In these cases the computer-aided synthesis of the three-dimensional core power distribution was carried out twice using the two (or four, rodded and unrodded for each burnup) sets of factors most nearly appropriate. The values of the reaction rate integrals are, of course, unaffected by the choice of the set of relative power distribution factors since the reaction rate integrals are derived directly from measurements. However, the average axial power distributions, to some degree,

and the inferred $F_{\Delta H}$ values, more strongly, are affected by the particular set of relative power distribution factors that is used, and so two sets of results corresponding to the two burnup-dependent sets of relative power distribution factors used are presented.

FLUX MAP 2-1- 5

DATE FEB 19, 1974 APPROXIMATE TIME OF MAP 1400 - 1500

POWER 25.0 PERCENT OF FULL POWER CONTROL BANK D AT 191 STEPS WITHDRAWN

BORON 1078 PPM PRESSURE 2225 PSIA RCS T-AV 550 DEGREES F

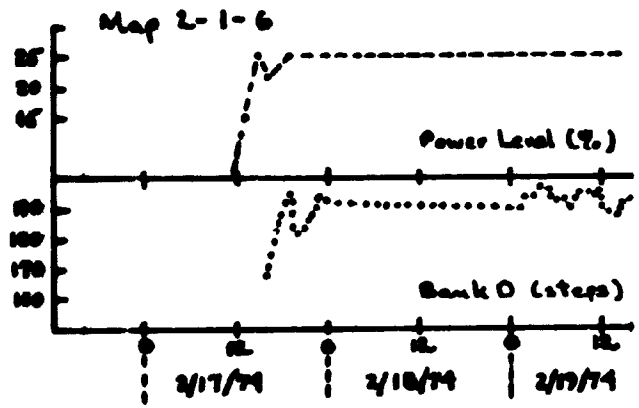

TABLE 3.3.2-1 Summary of Power Distribution Parameters for Flux Map 2-1-6

TOTAL NORMALIZED REACTION RATE INTEGRALS FLUX MAP 2-1- 6 2-19-74

	R	P	N	M	L	K	J	H	G	F	E	D	C	B	A
1							0.721			0.611					
2			0.437			1.192									
3								1.153		1.143		0.856			
4			0.888					1.271							
5					1.259				1.229		1.250		1.221		
6	0.623					1.189		1.160						1.209	
7				1.043			1.151			0.854			1.315		
8	0.651				0.991		0.946			1.155			1.140	1.235	
9									1.123		1.261				
10					1.005		0.862					1.206			
11	0.529				1.235			0.903			1.246				0.535
12						1.285						1.161			
13			0.852		1.240			1.150						0.439	
14			0.439				0.882			1.214		0.763			
15								0.678							

REGION 1 (ROODED) REACTION RATES FLUX MAP 2-1- 6 2-19-74

	R	P	N	M	L	K	J	H	G	F	E	D	C	B	A
1							0.709			0.667					
2			0.423			1.323									
3								1.145		1.266		0.713			
4			0.807					0.754							
5					1.224				1.097		1.440		1.113		
6	0.720					1.220		1.238						1.342	
7				0.999			1.151			0.858			1.327		
8	0.723				0.834		0.995			1.174			1.071	1.212	
9									1.143		1.312				
10					0.990		0.903					1.298			
11	0.502				1.278			0.971			1.305				0.562
12						1.238						0.776			
13			0.830		1.295			1.065						0.458	
14			0.433				1.057			1.288		0.886			
15								0.734							

REGION 2 (UNRODDED) REACTION RATES FLUX MAP 2-1- 6 2-19-74

	R	P	N	M	L	K	J	H	G	F	E	D	C	B	A
1							0.722			0.607					
2			0.438			1.183									
3								1.154		1.135		0.866			
4			0.849					1.307							
5					1.261				1.228		1.237		1.228		
6	0.616					1.177		1.154						1.200	
7				1.046			1.151			0.854			1.315		
8	0.646				1.002		0.942			1.153			1.153	1.236	
9									1.122		1.257				
10					1.006		0.860					1.285			
11	0.528				1.232			0.983			1.242				0.533
12						1.288						1.188			
13			0.854		1.236			1.156						0.437	
14			0.439				0.870			1.208		0.755			
15								0.671							

AVERAGE AXIAL CONDITIONS FLUX MAP 2-1- 6 2-19-74
POWER LEVEL EDITED AT 3250.0 MEGAWATTS THERMAL AVERAGE KW/FT = 6.700

POINT	KW/FT	POINT	KW/FT
1	1.008	32	9.556
2	1.350	33	9.581
3	1.794	34	9.565
4	2.234	35	9.498
5	2.639	36	9.384
6	2.848	37	9.223
7	3.515	38	8.821
8	4.124	39	8.142
9	4.656	40	8.750
10	5.183	41	8.841
11	5.650	42	8.794
12	6.072	43	8.701
13	6.434	44	8.556
14	6.740	45	8.353
15	6.995	46	8.090
16	7.125	47	7.766
17	6.825	48	7.389
18	7.610	49	6.754
19	8.103	50	6.085
20	8.407	51	6.216
21	8.649	52	5.940
22	8.841	53	5.559
23	8.988	54	5.134
24	9.073	55	4.641
25	9.119	56	4.103
26	9.115	57	3.509
27	8.921	58	2.864
28	8.315	59	2.154
29	9.071	60	1.581
30	9.360	61	1.433
31	9.477		

FRACTION OF AVERAGE AXIAL POWER PRODUCED IN EACH REGION

REGION NO.	TOP	BOTTOM	REGION KW/FT	FRACTION OF POWER	
1	1	19	2.917	0.0653	(RODDED)
2	10	61	7.367	0.9347	(UNRODDED)

INFERRED FDHN FLUX MAP 2-1- 6 2-19-74

	R	P	N	M	L	K	J	H	G	F	E	D	C	B	A
1					0.642	0.721	0.857	0.760	0.858	0.709	0.619				
2			0.500	0.896	1.039	1.081	1.029	1.088	1.023	1.053	1.014	0.883	0.493		
3		0.491	1.012	0.877	1.135	1.200	1.224	1.207	1.216	1.173	1.116	0.880	1.015	0.493	
4		0.866	0.961	1.201	1.008	1.207	1.122	1.187	1.111	1.177	0.994	1.213	0.879	0.881	
5	0.631	1.013	1.099	0.994	1.153	1.069	1.137	1.059	1.127	1.067	1.151	0.996	1.123	1.039	0.651
6	0.723	1.066	1.134	1.166	1.060	1.091	0.942	1.083	0.934	1.080	1.052	1.188	1.190	1.094	0.746
7	0.870	1.026	1.171	1.077	1.116	0.940	1.060	0.996	1.043	0.905	1.092	1.112	1.217	1.048	0.906
8	0.771	1.088	1.162	1.147	1.041	1.075	0.993	1.040	0.974	1.073	1.047	1.183	1.207	1.131	0.809
9	0.865	1.021	1.175	1.084	1.117	0.931	1.042	0.972	1.036	0.945	1.157	1.121	1.227	1.053	0.908
10	0.708	1.043	1.138	1.160	1.042	1.078	0.909	1.050	0.923	1.106	1.080	1.187	1.179	1.055	0.716
11	0.610	1.000	1.093	0.975	1.131	1.053	1.110	1.030	1.111	1.085	1.150	1.005	1.139	1.011	0.625
12		0.876	0.888	1.217	0.995	1.186	1.106	1.160	1.095	1.196	1.012	1.240	0.903	0.888	
13		0.499	1.026	0.891	1.135	1.189	1.218	1.204	1.231	1.222	1.156	0.905	1.040	0.502	
14			0.501	0.896	1.041	1.080	1.042	1.112	1.055	1.104	1.056	0.906	0.504		
15					0.643	0.730	0.892	0.802	0.903	0.749	0.652				

FLUX MAP 2-1- 7

DATE FEB 25, 1974 APPROXIMATE TIME OF MAP 1045 - 1200

POWER 35.0 PERCENT OF FULL POWER CONTROL BANK D AT 181 STEPS WITHDRAWN

BORON 1039 PPM PRESSURE 2264 PSIA RCS T-AV 546 DEGREES F

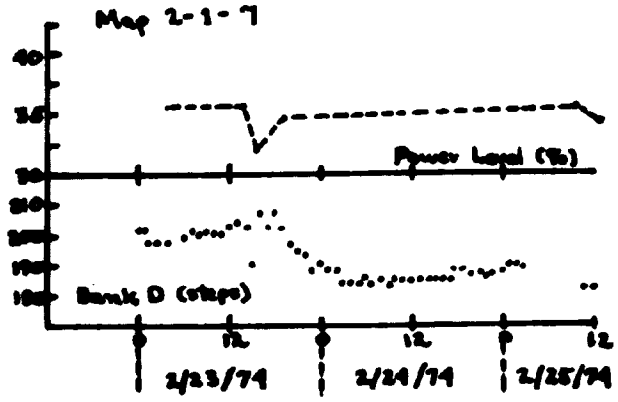

TABLE 3.3.3-2 Summary of Power Distribution Parameters for Flux Map 2-1-7

TOTAL NORMALIZED REACTION RATE INTEGRALS FLUX MAP 2-1- 7 2-25-74

	R	P	N	M	L	K	J	H	G	F	E	D	C	B	A
1							0.739			0.621					
2			0.420			1.190									
3								1.114		1.145		0.841			
4			0.051					1.253							
5					1.214				1.230		1.246		1.254		
6	0.418					1.196		1.167						1.194	
7				1.053			1.156			0.878			1.318		
8	0.064				0.995		0.939			1.154			1.140	1.239	
9									1.153		1.229				
10					1.004		0.000					1.30[illegible]			
11	0.532				1.232			1.015			1.229				0.514
12						1.290						1.0[illegible]8			
13			0.062		1.255			1.135						0.444	
14			0.439				0.803			1.213		0.756			
15								0.674							

REGION 1 (RODDED) REACTION RATES FLUX MAP 2-1- 7 2-25-74

	R	P	N	M	L	K	J	H	G	F	E	D	C	B	A
1							0.896			0.711					
2			0.415			1.321									
3								1.037		1.061		0.702			
4			0.828					0.801							
5					1.173				1.166		1.213		1.217		
6	0.747					1.287		1.261						1.386	
7				1.037			1.186			0.905			1.395		
8	0.809				0.844		0.846			1.162			1.004	1.347	
9									1.118		1.250				
10					1.049		0.954					1.263			
11	0.640				1.189			1.017			1.191				0.608
12						1.383						0.650			
13			0.855		1.340			1.000						0.472	
14			0.451				0.969			1.404		0.783			
15								0.820							

REGION 2 (WORDDOED) REACTION RATES FLUX MAP 2-1- 7 2-25-74

	R	P	N	M	L	K	J	H	G	F	E	D	C	B	A
1							0.724			0.612					
2			0.429			1.186									
3								1.121		1.152		0.854			
4			0.853					1.295							
5					1.210				1.236		1.249		1.257		
6	0.606					1.187		1.158						1.176	
7				1.054			1.153			0.876			1.311		
8	0.659				1.009		0.948			1.153			1.153	1.229	
9									1.156		1.227				
10					0.999		0.873					1.306			
11	0.522				1.236			1.014			1.240				0.527
12						1.289						1.140			
13			0.863		1.267			1.148						0.441	
14			0.438				0.875			1.195		0.753			
15								0.660							

AVERAGE AXIAL CONDITIONS FLUX MAP 2-1- 7 2-25-74
POWER LEVEL EDITED AT 3250.0 MEGAWATTS THERMAL AVERAGE KW/FT = 6.700

POINT	KW/FT	POINT	KW/FT
1	0.940	32	9.654
2	1.250	33	9.706
3	1.669	34	9.699
4	2.076	35	9.646
5	2.449	36	9.552
6	2.636	37	9.406
7	3.212	38	9.035
8	3.756	39	8.310
9	4.200	40	8.957
10	4.636	41	9.075
11	5.062	42	9.053
12	5.527	43	8.972
13	5.935	44	8.840
14	6.287	45	8.648
15	6.595	46	8.393
16	6.803	47	8.071
17	6.551	48	7.682
18	7.340	49	7.020
19	7.882	50	6.334
20	8.218	51	6.513
21	8.495	52	6.228
22	8.723	53	5.844
23	8.894	54	5.404
24	9.015	55	4.900
25	9.080	56	4.336
26	9.100	57	3.715
27	8.954	58	3.037
28	8.325	59	2.290
29	9.090	60	1.689
30	9.418	61	1.555
31	9.553		

FRACTION OF AVERAGE AXIAL POWER PRODUCED IN EACH REGION

REGION NO.	TOP	BOTTOM	REGION KW/FT	FRACTION OF POWER	
1	1	12	3.107	0.0850	(RODDED)
2	12	61	7.506	0.9150	(UNRODDED)

	R	P	N	M	L	K	J	H	G	F	E	D	C	B	A
1					0.645	0.731	0.876	0.778	0.871	0.720	0.628				
2				0.489	0.877	1.043	1.087	1.031	1.076	1.017	1.061	1.014	0.869	0.485	
3			0.490	1.008	0.872	1.130	1.203	1.287	1.171	1.201	1.174	1.107	0.864	0.998	0.485
4			0.882	0.974	1.184	0.970	1.165	1.184	1.166	1.184	1.179	0.986	1.202	0.885	0.905
5	0.625	1.018	1.119	0.977	1.117	1.056	1.142	1.060	1.135	1.070	1.146	1.006	1.148	1.046	0.643
6	0.717	1.098	1.140	1.157	1.053	1.100	0.950	1.089	0.945	1.095	1.060	1.198	1.196	1.085	0.737
7	0.877	1.032	1.185	1.086	1.126	0.945	1.063	0.996	1.055	0.926	1.108	1.107	1.216	1.046	0.902
8	0.709	1.112	1.174	1.145	1.045	1.076	0.987	1.038	0.987	1.076	1.040	1.161	1.201	1.133	0.812
9	0.886	1.044	1.173	1.083	1.118	0.935	1.048	0.985	1.060	0.945	1.134	1.111	1.228	1.053	0.912
10	0.713	1.050	1.137	1.157	1.040	1.085	0.929	1.079	0.951	1.101	1.070	1.134	1.195	1.053	0.715
11	0.622	1.005	1.395	0.971	1.129	1.055	1.133	1.062	1.149	1.069	1.132	0.986	1.118	1.008	0.623
12		0.884	0.397	1.214	0.997	1.191	1.112	1.162	1.105	1.179	0.979	1.176	0.879	0.893	
13		0.503	1.036	0.897	1.147	1.199	1.214	1.159	1.220	1.218	1.132	0.877	1.026	0.507	
14			0.502	0.303	1.055	1.087	1.040	1.06	1.049	1.103	1.050	0.897	0.503		
15					0.653	0.731	0.890	0.797	0.900	0.749	0.649				

FLUX MAP 2-1- 9

DATE MAR 18, 1974 APPROXIMATE TIME OF MAP 0945 - 1045

POWER 49.5 PERCENT OF FULL POWER CONTROL BANK D AT 20o STEPS WITHDRAWN

BORON 994 PPM PRESSURE 2246 PSIA RCS T-AV 552 DEGREES F

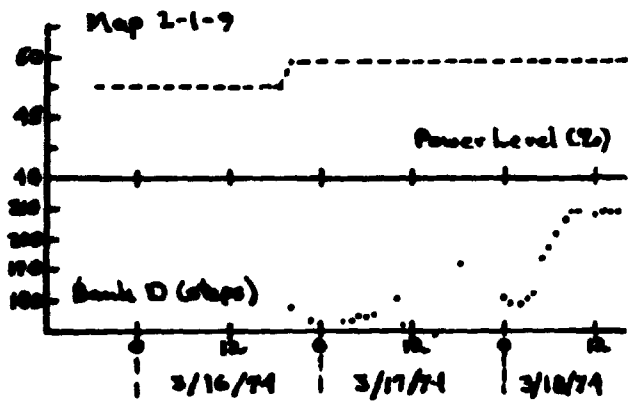

TABLE 3.3.2-3 Summary of Power Distribution Parameters for Flux Map 2-1-9

TOTAL NORMALIZED REACTION RATE INTEGRALS FLUX MAP 2-1- 9 3-18-74

	R	P	N	M	L	K	J	H	G	F	E	D	C	B	A
1							0.721			0.604					
2			0.434			1.169		1.227							
3								1.120		1.146		0.860		0.439	
4			0.854					1.333							
5					1.216				1.258		1.264		1.252		
6	0.606		1.127			1.210		1.182						1.166	
7				1.073			1.190			0.894			1.343		
8	0.650		1.170		1.042		0.972			1.212		1.344	1.166	1.234	
9		0.874							1.207		1.257				0.720
10					1.004		0.902					1.317			
11	0.533				1.254			1.039			1.243				0.528
12						1.300			1.078			1.117			
13			0.853		1.250			1.151						0.439	
14			0.437				0.867			1.209		0.743			
15					0.522			0.656							

REGION 1 (RODDED) REACTION RATES FLUX MAP 2-1- 9 3-18-74

	R	P	N	M	L	K	J	H	G	F	E	D	C	B	A
1							0.784			0.642					
2			0.413			1.262		1.011							
3								1.080		1.101		0.781		0.446	
4			0.676					0.904							
5					1.141				1.298		1.349		1.252		
6	0.610		1.223			1.271		1.320						1.253	
7				1.079			1.269			0.944			1.397		
8	0.753		1.363		1.007		0.969			1.255		0.766	1.086	1.323	
9		0.856							1.329		1.313				0.647
10					1.153		1.011					1.164			
11	0.617				1.345			0.912			1.156				0.548
12						1.206			1.130			0.741			
13			0.854		1.270			1.048						0.469	
14			0.433				0.852			1.347		0.755			
15					0.583			0.746							

REGION 2 (UNBODDED) REACTION RATES FLUX MAP 2-1- 9 3-18-74

	R	P	N	M	L	K	J	H	G	F	E	D	C	B	A
1							0.719			0.603					
2			0.435			1.167		1.212							
3								1.121		1.147		0.862		0.439	
4			0.090					1.344							
5					1.218				1.257		1.262		1.252		
6	0.606		1.125			1.209		1.178						1.163	
7				1.073			1.196			0.893			1.341		
8	0.647		1.181		1.043		0.972			1.211		1.359	1.168	1.232	
9		0.075							1.204		1.255				0.722
10					1.000		0.099					1.321			
11	0.530				1.252			1.042			1.245				0.528
12						1.311			1.077			1.127			
13			0.953		1.249			1.154						0.439	
14			0.437				0.067			1.206		0.742			
15					0.521			0.654							

AVERAGE AXIAL CONDITIONS — FLUX MAP 2-1- 3 — 3-18-74

POWER LEVEL EQUTED AT 3250.0 MEGAWATTS THERMAL — AVERAGE KW/FT = 6.700

POINT	KW/FT	POINT	KW/FT
1	1.440	32	8.961
2	1.910	33	8.919
3	2.549	34	8.835
4	3.174	35	8.717
5	3.776	36	8.559
6	4.030	37	8.362
7	4.966	38	7.989
8	5.713	39	7.225
9	6.291	40	7.812
10	6.790	41	7.850
11	7.220	42	7.780
12	7.576	43	7.670
13	7.957	44	7.520
14	8.066	45	7.322
15	8.208	46	7.083
16	8.226	47	6.785
17	7.625	48	6.452
18	8.425	49	5.900
19	8.827	50	5.255
20	9.021	51	5.438
21	9.157	52	5.192
22	9.239	53	4.870
23	9.275	54	4.501
24	9.256	55	4.083
25	9.191	56	3.617
26	9.085	57	3.099
27	8.822	58	2.543
28	8.028	59	1.919
29	8.750	60	1.394
30	8.933	61	1.337
31	8.964		

FRACTION OF AVERAGE AXIAL POWER PRODUCED IN EACH REGION

REGION NO.	TOP	BOTTOM	REGION KW/FT	FRACTION OF POWER	
1	1	5	2.560	0.0255	(RODDED)
2	5	61	6.996	0.9745	(UNRODDED)

INFERPED FORM FLUX MAP 2-1- 9 3-18-74

	R	P	N	M	L	K	J	H	G	F	E	D	C	B	A
1					0.624	0.706	0.851	0.774	0.861	0.694	0.606				
2			0.492	0.881	1.012	1.052	1.018	1.109	1.017	1.038	1.001	0.874	0.493		
3		0.408	1.010	0.877	1.111	1.170	1.211	1.182	1.210	1.165	1.108	0.876	1.019	0.498	
4		0.867	0.870	1.210	0.969	1.154	1.122	1.224	1.119	1.181	0.995	1.239	0.890	0.892	
5	0.608	0.994	1.095	0.972	1.111	1.053	1.156	1.082	1.151	1.077	1.153	1.010	1.135	1.023	0.622
6	0.697	1.031	1.146	1.155	1.052	1.104	0.960	1.097	0.953	1.102	1.066	1.199	1.182	1.055	0.712
7	0.850	1.011	1.200	1.104	1.145	0.963	1.089	1.020	1.077	0.939	1.151	1.139	1.225	1.035	0.879
8	0.764	1.091	1.216	1.207	1.083	1.104	1.014	1.098	1.027	1.114	1.083	1.237	1.219	1.118	0.776
9	0.861	1.023	1.219	1.113	1.134	0.948	1.069	1.018	1.102	0.972	1.155	1.136	1.237	1.028	0.850
10	0.710	1.051	1.172	1.155	1.034	1.088	0.943	1.099	0.973	1.116	1.075	1.198	1.194	1.033	0.699
11	0.617	1.001	1.098	0.979	1.137	1.063	1.147	1.078	1.147	1.064	1.133	0.987	1.107	0.993	0.612
12		0.872	0.883	1.241	1.004	1.196	1.126	1.199	1.106	1.169	0.975	1.190	0.867	0.878	
13		0.493	1.018	0.889	1.135	1.184	1.207	1.193	1.210	1.188	1.113	0.864	1.010	0.498	
14			0.495	0.878	1.009	1.049	1.014	1.083	1.034	1.091	1.030	0.874	0.492		
15					0.605	0.699	0.861	0.769	0.876	0.739	0.635				

FLUX MAP 2-1-26

DATE SEP 21, 1974 APPROXIMATE TIME OF MAP 1400 - 1600

POWER 48.0 PERCENT OF FULL POWER CONTROL BANK D AT 203 STEPS WITHDRAWN

BORON 992 PPM PRESSURE 2252 PSIA RCS T-AV 552 DEGREES F

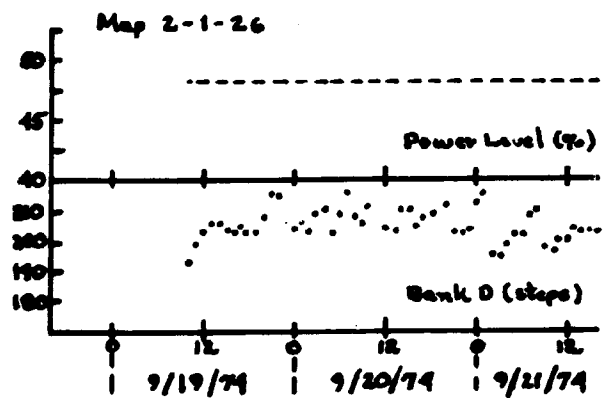

TABLE 3.3.2-4 Summary of Power Distribution Parameters for Flux Map 2-1-26

TOTAL NORMALIZED REACTION RATE INTEGRALS FLUX MAP 2-1-26 9-21-74

	R	P	H	N	L	K	J	M	G	F	E	D	C	B	A
1							0.698								
2			0.419			1.152		1.214							
3								1.093		1.124		0.839		0.459	
4		0.700						1.318							
5					1.194				1.245		1.240		1.233		
6	0.593		1.127			1.210		1.190						1.133	
7				1.080			1.216			0.910			1.320		
8	0.645		1.141		1.036		0.992			1.206		1.438	1.157	1.207	
9		0.848							1.207		1.235				0.702
10					1.017		0.919					1.301			
11	0.523				1.241			1.049			1.223				0.522
12						1.374			1.075			1.094			
13			0.840		1.228									0.428	
14			0.422				0.857			1.181					
15					0.531			0.646							

	R	P	N	M	L	K	J	H	G	F	E	D	C	B	A
1							0.755								
2			0.399			1.267		1.200							
3								1.036		1.075		0.790		0.509	
4		0.653						0.886							
5					1.155				1.264		1.319		1.245		
6	0.651		1.136			1.272		1.272						1.229	
7				1.065			1.226			0.930			1.361		
8	0.735		1.125		1.083		1.008			1.253		1.000	1.051	1.306	
9		0.937							1.192		1.294				0.786
10					1.107		0.994					1.143			
11	0.595				1.206			1.059			1.217				0.555
12						1.356			1.117			0.663			
13			0.845		1.318									0.469	
14			0.422				0.888			1.302					
15					0.573			0.706							

RECTOR 2 (UNRODDED) REACTION RATES FLUX MAP 2-1-26 9-21-74

	R	P	N	M	L	K	J	H	G	F	E	D	C	B	A
1							0.695								
2			0.419			1.148		1.214							
3								1.095		1.126		0.841		0.457	
4		0.702						1.334							
5					1.196				1.244		1.238		1.232		
6	0.591		1.126			1.216		1.187						1.129	
7				1.081			1.215			0.909			1.318		
8	0.642		1.141		1.037		0.991			1.204		1.454	1.161	1.204	
9		0.845							1.200		1.233				0.690
10					1.013		0.916					1.307			
11	0.520				1.239			1.048			1.223				0.521
12						1.375			1.074			1.110			
13			0.340		1.225									0.427	
14			0.422				0.855			1.176					
15					0.530			0.644							

AVERAGE AXIAL CONDITIONS — FLUX MAP 2-1-26 — 9-21-74

POWER LEVEL EDITED AT 3250.0 MEGAWATTS THERMAL — AVERAGE KW/FT = 6.700

POINT	KW/FT	POINT	KW/FT
1	1.117	32	9.341
2	1.475	33	9.369
3	1.904	34	9.352
4	2.486	35	9.289
5	2.950	36	9.189
6	3.175	37	9.035
7	3.995	38	8.677
8	4.629	39	7.886
9	5.140	40	8.622
10	5.605	41	8.696
11	6.019	42	8.656
12	6.304	43	8.572
13	6.693	44	8.432
14	6.948	45	8.240
15	7.156	46	7.990
16	7.262	47	7.677
17	6.800	48	7.311
18	7.673	49	6.689
19	8.009	50	5.998
20	8.355	51	6.203
21	8.567	52	5.919
22	8.732	53	5.552
23	8.852	54	5.133
24	8.927	55	4.651
25	8.956	56	4.121
26	8.943	57	3.523
27	8.778	58	2.876
28	8.846	59	2.166
29	8.904	60	1.578
30	9.158	61	1.490
31	9.269		

FRACTION OF AVERAGE AXIAL POWER PRODUCED IN EACH REGION

REGION NO.	TOP	BOTTOM	REGION KW/FT	FRACTION OF POWER	
1	1	7	2.438	0.0364	(RODDED)
2	7	61	7.173	0.9636	(UNRODDED)

	R	P	N	M	L	K	J	H	G	F	E	D	C	B	A
1					0.620	0.696	0.834	0.764	0.091	0.705	0.615				
2				0.479	0.056	1.006	1.044	1.096	1.103	1.015	1.040	0.998	0.861	0.503	
3			0.470	0.977	0.050	1.102	1.162	1.204	1.168	1.201	1.153	1.094	0.862	1.038	0.524
4			0.031	0.033	1.183	0.959	1.144	1.117	1.218	1.113	1.172	0.983	1.218	0.896	0.919
5	0.990	0.977	1.081	0.965	1.103	1.057	1.169	1.087	1.151	1.071	1.142	1.000	1.126	1.010	0.610
6	0.007	1.020	1.197	1.163	1.059	1.119	0.978	1.113	0.964	1.111	1.071	1.189	1.169	1.037	0.690
7	0.046	1.004	1.200	1.115	1.157	0.900	1.114	1.041	1.094	0.960	1.195	1.173	1.224	1.024	0.865
8	0.769	1.078	1.192	1.199	1.087	1.124	1.043	1.116	1.037	1.120	1.112	1.304	1.229	1.106	0.764
9	0.052	1.003	1.191	1.112	1.148	0.968	1.099	1.037	1.118	0.974	1.157	1.160	1.250	1.017	0.835
10	0.700	1.033	1.165	1.169	1.054	1.100	0.960	1.120	0.986	1.114	1.069	1.193	1.191	1.022	0.692
11	0.611	0.990	1.006	0.985	1.144	1.092	1.104	1.096	1.162	1.062	1.125	0.979	1.101	0.989	0.610
12		0.805	0.877	1.227	1.019	1.252	1.180	1.209	1.114	1.171	0.966	1.175	0.856	0.867	
13		0.487	1.309	0.878	1.133	1.206	1.238	1.194	1.214	1.180	1.100	0.843	0.996	0.490	
14			0.484	0.872	1.017	1.053	1.011	1.080	1.030	1.074	1.036	0.843	0.490		
15					0.620	0.709	0.857	0.765	0.857	0.728	0.635				

FLUX MAP 2-1-27

DATE	OCT 7, 1974	APPROXIMATE TIME OF MAP	1800 - 1930
POWER	73.0 PERCENT OF FULL POWER	CONTROL BANK D AT	210 STEPS WITHDRAWN
BORON	980 PPM PRESSURE 2210 PSIA	RCS T-AV	555 DEGREES F

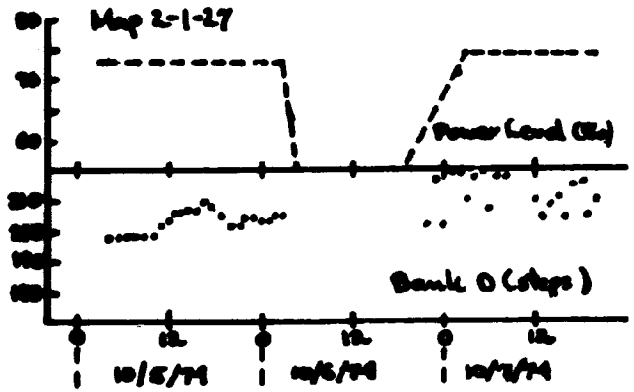

TABLE 3.3.2-5 Summary of Power Distribution Parameters for Flux Map 2-1-27

TOTAL NORMALIZED REACTION RATE INTEGRALS FLUX MAP 2-1-27 10- 7-74

	R	P	N	M	L	K	J	H	G	F	E	D	C	B	A
1							0.709			0.590					
2			0.427			1.142		1.236							
3								1.096		1.117				0.448	
4		0.697	0.847					1.355							
5					1.206				1.260		1.246		1.230		
6	0.390		1.134			1.228		1.201						1.136	
7				1.109			1.253			0.919			1.360		
8	0.651		1.177		1.051		1.828			1.268		1.351	1.187	1.215	
9		0.894							1.247		1.259				0.722
10					1.029		0.946					1.319			
11	0.532				1.233			1.049			1.215				0.524
12						1.392			1.094			1.089			
13			0.845		1.217			1.115						0.429	
14			0.428				0.853			1.199		0.725			
15					0.538			0.650							

REGION 2 (UNPOISONED) REACTION RATES FLUX MAP 2-1-27 10- 7-74

	R	P	N	M	L	K	J	H	G	F	E	D	C	B	A
1							0.708			0.587					
2			0.420			1.149		1.236							
3								1.096		1.117				0.446	
4		0.690	0.847					1.364							
5					1.205				1.268		1.249		1.229		
6	0.509		1.134			1.227		1.200						1.135	
7				1.189			1.252			0.919			1.360		
8	0.640		1.177		1.052		1.029			1.267		1.365	1.189	1.213	
9		0.802							1.245		1.258				0.720
10					1.026		0.943					1.324			
11	0.590				1.232			1.049			1.214				0.523
12						1.392			1.094			1.099			
13			0.846		1.214			1.117						0.428	
14			0.429				0.853			1.195		0.724			
15					0.529			0.648							

REGION 1 (ROD0E0) REACTION RATES FLUX MAP 2-1-27 10- 7-74

	R	P	M	N	L	K	J	H	G	F	E	D	C	B	A
1							0.766			0.687					
2			0.306			1.250		1.248							
3								1.062		1.113				0.507	
4		0.640	0.027					0.929							
5					1.271				1.279		1.110		1.266		
6	0.624		1.121			1.295		1.276						1.203	
7				1.114			1.359			0.926			1.352		
8	0.701		1.195		1.005		1.001			1.306		0.663	1.092	1.306	
9		0.903							1.333		1.326				0.796
10					1.140		1.066					1.078			
11	0.638				1.315			1.048			1.269				0.555
12						1.391			1.076			0.586			
13			0.827		1.379			1.028						0.482	
14			0.414				0.057			1.307		0.749			
15					0.567			0.738							

AVERAGE AXIAL CONDITIONS
POWER LEVEL EDITED AT 3250.0 MEGAWATTS THERMAL

FLUX MAP 2-1-27
AVERAGE KW/FT = 6.700

10- 7-74

POINT	KW/FT	POINT	KW/FT
1	1.183	32	9.136
2	1.920	33	9.186
3	2.032	34	9.199
4	2.634	35	9.171
5	3.017	36	9.103
6	3.233	37	8.994
7	4.014	38	8.684
8	4.620	39	7.910
9	5.099	40	8.690
10	5.230	41	8.307
11	5.912	42	8.803
12	6.246	43	8.754
13	6.529	44	8.647
14	6.760	45	8.480
15	6.946	46	8.267
16	7.032	47	7.976
17	6.970	48	7.634
18	7.409	49	7.020
19	7.806	50	6.310
20	8.055	51	6.576
21	8.259	52	6.306
22	8.420	53	5.938
23	8.535	54	5.507
24	8.617	55	5.010
25	8.652	56	4.451
26	8.653	57	3.827
27	8.507	58	3.136
28	7.797	59	2.375
29	8.661	60	1.726
30	8.919	61	1.679
31	9.045		

FRACTION OF AVERAGE AXIAL POWER PRODUCED IN EACH REGION

REGION NO.	TOP	BOTTOM	REGION KW/FT	FRACTION OF POWER	
1	1	5	2.048	0.0204	(RODDED)
2	5	61	7.032	0.9796	(UNRODDED)

INFERRED FDHW FLUX MAP 2-1-27 10- 7-74

	R	P	N	M	L	K	J	H	G	F	E	D	C	B	A
1					0.609	0.692	0.838	0.770	0.851	0.670	0.992				
2				0.484	0.865	0.989	1.029	1.005	1.111	1.004	1.012	0.971	0.838	0.507	
3			0.472	0.905	0.866	1.086	1.143	1.203	1.167	1.198	1.135	1.078	0.852	1.048	0.507
4			0.827	0.857	1.201	0.961	1.145	1.123	1.230	1.117	1.166	0.980	1.235	0.894	0.896
5	0.590	0.973	1.082	0.968	1.104	1.057	1.174	1.096	1.162	1.073	1.137	0.994	1.114	1.001	0.606
6	0.678	1.020	1.156	1.169	1.063	1.121	0.905	1.117	0.968	1.112	1.060	1.191	1.170	1.033	0.694
7	0.839	1.006	1.215	1.132	1.167	0.993	1.136	1.059	1.109	0.968	1.181	1.150	1.235	1.030	0.861
8	0.765	1.095	1.220	1.225	1.095	1.143	1.071	1.153	1.065	1.157	1.104	1.246	1.233	1.110	0.770
9	0.865	1.032	1.225	1.125	1.152	0.980	1.125	1.063	1.139	0.998	1.162	1.142	1.240	1.027	0.850
10	0.712	1.050	1.185	1.164	1.053	1.113	0.904	1.131	0.996	1.121	1.069	1.198	1.196	1.030	0.697
11	0.616	1.000	1.098	0.979	1.132	1.093	1.190	1.092	1.160	1.054	1.109	0.971	1.091	0.985	0.607
12			0.860	0.875	1.222	1.012	1.253	1.150	1.198	1.117	1.168	0.950	1.160	0.844	0.862
13			0.487	1.007	0.873	1.115	1.196	1.204	1.163	1.199	1.188	1.090	0.841	0.984	0.486
14				0.486	0.867	1.002	1.037	0.997	1.062	1.018	1.082	1.013	0.853	0.480	
15					0.613	0.700	0.850	0.762	0.868	0.732	0.624				

FLUX MAP 2-1-29

DATE	NOV 14, 1974	APPROXIMATE TIME OF MAP	1430 - 1600
POWER	82.0 PERCENT OF FULL POWER	CONTROL BANK D AT	200 STEPS WITHDRAWN
BORON	882 PPM PRESSURE 2230 PSIA	RCS T-AV	556 DEGREES F

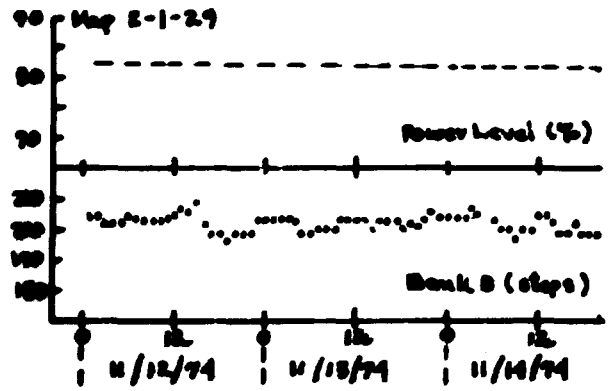

TABLE 3.3.2-6 Summary of Power Distribution Parameters for Flux Map 2-1-29

TOTAL NORMALIZED REACTION RATE INTEGRALS FLUX MAP 2-1-29 11-14-74

	R	P	N	M	L	K	J	H	G	F	E	D	C	B	A
1										0.596					
2			0.422			1.153		1.245							
3								1.103				0.842		0.466	
4		0.704	0.851					1.368							
5					1.209				1.277				1.239		
6	0.595		1.146			1.254		1.225						1.129	
7				1.122			1.272			0.945			1.351		
8	0.662		1.189				1.054			1.278		1.350	1.198	1.221	
9		0.878									1.259				0.719
10					1.057		0.974					1.328			
11	0.532				1.249			1.074			1.227				0.530
12						1.378			1.108			1.080			
13			0.844		1.216			1.122						0.436	
14			0.429							1.190		0.723			
15					0.535			0.654							

REGION 1 (WOODED) REACTION RATES FLUX MAP 2-1-29 11-14-74

	R	P	N	M	L	K	J	H	G	F	E	D	C	B	A
1										0.667					
2			0.390			1.241		1.255							
3								1.079				0.791		0.508	
4		0.747	0.673					1.109							
5					1.147				1.314				1.246		
6	0.617		1.123			1.327		1.310						1.222	
7				1.140			1.300			0.968			1.398		
8	0.755		1.205				1.035			1.345		0.970	1.124	1.307	
9		0.973									1.349				0.797
10					1.153		1.058					1.240			
11	0.598				1.332			1.112			1.137				0.556
12						1.348			1.097			0.579			
13			0.811		1.312			1.039						0.460	
14			0.407							1.306		0.723			
15					0.577			0.713							

REGION 2 (UNBORDED) REACTION RATES FLUX MAP 2-1-29 11-14-74

	R	P	N	M	L	K	J	H	G	F	E	D	C	B	A
1										0.592					
2			0.423			1.149		1.245							
3								1.104				0.845		0.464	
4		0.702	0.859					1.372							
5					1.212				1.275				1.238		
6	0.594		1.148			1.251		1.221						1.125	
7				1.121			1.271			0.944			1.349		
8	0.657		1.189				1.055			1.275		1.368	1.202	1.216	
9		0.873									1.254				0.715
10					1.052		0.970					1.332			
11	0.529				1.245			1.073			1.231				0.529
12						1.379			1.109			1.104			
13			0.846		1.211			1.126						0.435	
14			0.438							1.185		0.723			
15					0.533			0.651							

AVERAGE AXIAL CONDITIONS FLUX MAP 2-1-29 11-14-74
POWER LEVEL EDITED AT 3250.0 MEGAWATTS THERMAL AVERAGE KW/FT = 6.700

POINT	KW/FT	POINT	KW/FT
1	1.179	32	9.050
2	1.511	33	9.100
3	2.009	34	9.114
4	2.505	35	9.086
5	2.959	36	9.021
6	3.170	37	8.920
7	3.945	38	8.605
8	4.572	39	7.889
9	5.055	40	8.641
10	5.498	41	8.764
11	5.896	42	8.776
12	6.237	43	8.737
13	6.525	44	8.650
14	6.757	45	8.508
15	6.945	46	8.304
16	7.030	47	8.035
17	6.570	48	7.711
18	7.379	49	7.082
19	7.784	50	6.449
20	8.025	51	6.708
21	8.222	52	6.454
22	8.376	53	6.097
23	8.490	54	5.676
24	8.565	55	5.181
25	8.600	56	4.613
26	8.595	57	3.979
27	8.441	58	3.270
28	7.763	59	2.478
29	8.584	60	1.831
30	8.844	61	1.731
31	8.964		

FRACTION OF AVERAGE AXIAL POWER PRODUCED IN EACH REGION

REGION NO.	TOP	BOTTOM	REGION KW/FT	FRACTION OF POWER	
1	1	8	2.711	0.0472	(RODDED)
2	8	51	7.227	0.9528	(UNRODDED)

	R	P	N	M	L	K	J	H	G	F	E	D	C	B	A
1					0.610	0.699	0.873	0.801	0.852	0.679	0.593				
2				0.474	0.849	0.989	1.032	1.014	1.117	1.089	1.002	0.975	0.852	0.500	
3			0.469	0.975	0.854	1.004	1.143	1.207	1.167	1.214	1.102	1.082	0.851	1.031	0.524
4			0.820	0.854	1.105	0.954	1.139	1.131	1.230	1.120	1.185	0.961	1.194	0.887	0.915
5	0.591	0.975	1.382	0.964	1.100	1.061	1.189	1.102	1.163	1.075	1.138	0.991	1.111	0.994	0.598
6	0.670	1.022	1.169	1.172	1.060	1.134	0.996	1.129	0.977	1.125	1.082	1.186	1.159	1.020	0.685
7	0.843	1.010	1.220	1.135	1.173	1.008	1.146	1.060	1.120	0.984	1.193	1.146	1.222	1.023	0.855
8	0.770	1.095	1.221	1.212	1.093	1.172	1.087	1.154	1.067	1.160	1.105	1.232	1.232	1.105	0.765
9	0.864	1.021	1.217	1.126	1.152	1.000	1.147	1.077	1.159	0.991	1.155	1.140	1.244	1.022	0.841
10	0.705	1.045	1.165	1.180	1.071	1.133	1.005	1.147	1.000	1.098	1.066	1.195	1.196	1.025	0.694
11	0.611	0.990	1.385	0.986	1.137	1.097	1.201	1.108	1.175	1.060	1.110	0.967	1.088	0.987	0.609
12			0.860	0.866	1.208	1.001	1.234	1.144	1.192	1.123	1.175	0.947	1.142	0.842	0.867
13			0.403	0.998	0.864	1.104	1.199	1.208	1.160	1.197	1.180	1.078	0.832	0.982	0.490
14				0.403	0.863	0.999	1.042	0.995	1.061	1.011	1.065	1.000	0.844	0.479	
15					0.615	0.705	0.855	0.762	0.862	0.722	0.617				

FLUX MAP 2-1-31

DATE	MAR 1, 1975	APPROXIMATE TIME OF MAP	1730 - 2030
POWER	83.0 PERCENT OF FULL POWER	CONTROL BANK D AT	188 STEPS WITHDRAWN
BORON	819 PPM PRESSURE 2252 PSIA	RCS T-AV	556 DEGREES F

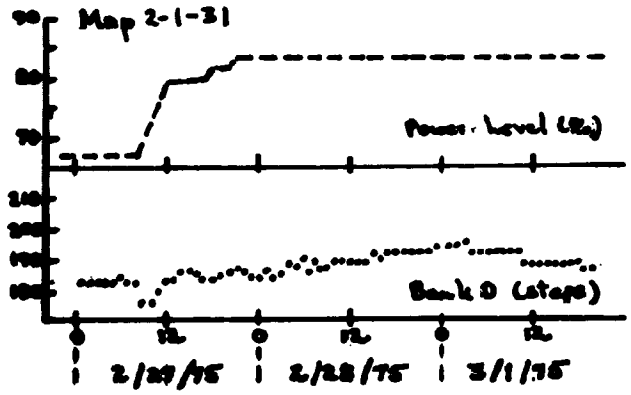

TABLE 3.3.2-7 Summary of Power Distribution Parameters for Flux Map 2-1-31

TOTAL NORMALIZED REACTION RATE INTEGRALS FLUX MAP 2-1-31 3- 1-75

	R	P	M	H	L	K	J	H	G	F	E	D	C	B	A
1							0.709								
2			0.431			1.162									
3								1.138		1.142		0.837			
4			0.050												
5					1.276				1.249				1.214		
6															
7				1.115			1.196						1.300		
8			1.089		1.103		1.062			1.247			1.153		
9											1.314				
10							1.009								
11	0.497							1.103			1.258				0.501
12						1.265			1.084						
13			0.832		1.108									0.440	
14							0.880					0.702			
15								0.655							

	R	P	N	M	L	K	J	H	G	F	E	D	C	B	A
1							0.776								
2			0.416			1.252									
3								1.087		1.140		0.759			
4			0.737												
5					1.194				1.263				1.201		
6															
7				1.076			1.201						1.341		
8			1.065		1.004		1.001			1.320			1.084		
9											1.330				
10							1.056								
11	0.550							1.106			1.264				0.542
12						1.362			1.037						
13			0.923		1.206									0.456	
14							0.870					0.715			
15								0.685							

	R	P	N	M	L	K	J	H	G	F	E	D	C	B	A
1							0.704								
2			0.432			1.154									
3								1.143		1.143		0.844			
4			0.860												
5					1.264				1.248				1.215		
6															
7				1.110			1.195						1.296		
8			1.091		1.111		1.067			1.241			1.159		
9											1.312				
10							1.004								
11	0.492							1.103			1.257				0.498
12						1.256			1.080						
13			0.932		1.179									0.439	
14							0.881					0.701			
15								0.652							

AVERAGE AXIAL CONDITIONS FLUX MAP 2-1-31 3- 1-75
PDQ DECK USED = NFPPDL
POWER LEVEL EDITED AT 3250.0 MEGAWATTS THERMAL AVERAGE KW/FT = 6.700

POINT	KW/FT	POINT	KW/FT
1	1.228	32	0.026
2	1.492	33	0.087
3	1.948	34	0.916
4	2.412	35	0.908
5	2.828	36	0.870
6	2.990	37	0.801
7	3.645	38	0.555
8	4.213	39	7.785
9	4.671	40	0.594
10	5.108	41	0.775
11	5.523	42	0.024
12	5.904	43	0.034
13	6.229	44	0.799
14	6.499	45	0.713
15	6.721	46	0.574
16	6.833	47	0.358
17	6.389	48	0.095
18	7.177	49	7.555
19	7.586	50	5.021
20	7.819	51	7.224
21	8.009	52	7.025
22	8.153	53	6.707
23	8.278	54	6.312
24	8.347	55	5.829
25	8.390	56	5.249
26	8.390	57	4.584
27	8.250	58	3.817
28	7.538	59	2.943
29	8.351	60	2.121
30	8.618	61	2.118
31	8.733		

FRACTION OF AVERAGE AXIAL POWER PRODUCED IN EACH REGION

REGION NO.	TOP	BOTTOM	REGION KW/FT	FRACTION OF POWER	
1	1	11	3.267	0.0813	(RODDED)
2	11	61	7.387	0.9187	(UNRODDED)

	R	P	N	M	L	K	J	H	G	F	E	D	C	B	A
1					0.622	0.701	0.836	0.742	0.833	0.715	0.623				
2			0.489	0.877	1.005	1.047	1.002	1.066	1.015	1.053	1.005	0.860	0.480		
3		0.400	1.004	0.869	1.098	1.168	1.194	1.181	1.196	1.164	1.096	0.854	0.987	0.480	
4		0.873	0.867	1.204	1.014	1.217	1.093	1.157	1.102	1.170	0.969	1.174	0.861	0.871	
5	0.620	1.015	1.108	1.000	1.167	1.103	1.185	1.061	1.142	1.064	1.125	0.977	1.105	1.013	0.626
6	0.720	1.061	1.207	1.213	1.101	1.136	0.970	1.102	0.959	1.109	1.064	1.153	1.159	1.049	0.718
7	0.822	0.968	1.193	1.139	1.209	1.013	1.106	1.055	1.141	1.013	1.207	1.096	1.189	1.014	0.854
8	0.732	1.032	1.141	1.189	1.145	1.174	1.095	1.126	1.067	1.157	1.110	1.178	1.194	1.084	0.774
9	0.800	0.968	1.140	1.123	1.239	1.040	1.104	1.108	1.141	1.011	1.202	1.142	1.207	1.024	0.806
10	0.661	0.974	1.104	1.273	1.167	1.217	1.051	1.197	1.042	1.151	1.103	1.217	1.169	0.982	0.667
11	0.576	0.932	1.317	0.955	1.109	1.096	1.218	1.145	1.194	1.080	1.150	0.999	1.027	0.940	0.581
12		0.834	0.860	1.154	0.959	1.156	1.135	1.215	1.120	1.186	0.999	1.209	0.890	0.862	
13		0.403	0.993	0.853	1.082	1.156	1.206	1.204	1.211	1.173	1.051	0.822	0.998	0.500	
14			0.483	0.859	0.992	1.054	1.031	1.093	1.019	1.006	0.963	0.828	0.477		
15					0.614	0.723	0.870	0.771	0.865	0.715	0.595				

AVERAGE AXIAL CONDITIONS FLUX MAP 2-1-31 3- 1-75
PDQ DECK USED = MFP03K
POWER LEVEL EDITED AT 3250.0 MEGAWATTS THERMAL AVERAGE KW/FT = 6.700

POINT	KW/FT	POINT	KW/FT
1	1.228	32	8.026
2	1.482	33	8.087
3	1.949	34	8.916
4	2.412	35	8.908
5	2.828	36	8.869
6	2.989	37	8.800
7	3.645	38	8.554
8	4.212	39	7.784
9	4.671	40	8.594
10	5.107	41	8.775
11	5.523	42	8.824
12	5.905	43	8.834
13	6.229	44	8.799
14	6.499	45	8.713
15	6.721	46	8.574
16	6.833	47	8.358
17	6.387	48	8.095
18	7.178	49	7.555
19	7.586	50	6.821
20	7.820	51	7.224
21	8.009	52	7.025
22	8.153	53	6.708
23	8.270	54	6.313
24	8.347	55	5.830
25	8.390	56	5.249
26	8.390	57	4.584
27	8.249	58	3.817
28	7.538	59	2.943
29	8.351	60	2.121
30	8.618	61	2.117
31	8.733		

FRACTION OF AVERAGE AXIAL POWER PRODUCED IN EACH REGION

REGION NO.	TOP	BOTTOM	REGION KW/FT	FRACTION OF POWER	
1	1	11	3.267	0.0813	(RODDED)
2	11	51	7.386	0.9187	(UNRODDED)

	R	P	N	M	L	K	J	H	G	F	E	D	C	B	A
1					0.619	0.781	0.826	0.741	0.823	0.706	0.613				
2			0.480	0.845	1.012	1.047	1.017	1.061	1.021	1.040	0.982	0.823	0.467		
3		0.477	0.967	0.871	1.117	1.195	1.201	1.205	1.197	1.184	1.084	0.853	0.947	0.467	
4		0.835	0.866	1.174	1.030	1.197	1.151	1.162	1.133	1.176	1.006	1.160	0.875	0.857	
5	0.597	0.975	1.076	1.010	1.166	1.135	1.192	1.088	1.142	1.088	1.162	1.026	1.104	1.001	0.612
6	0.687	1.012	1.186	1.197	1.135	1.138	0.991	1.110	1.009	1.124	1.131	1.187	1.177	1.034	0.705
7	0.804	0.976	1.172	1.153	1.207	1.036	1.104	1.076	1.151	1.044	1.183	1.151	1.189	1.021	0.834
8	0.724	1.023	1.159	1.175	1.163	1.167	1.110	1.119	1.103	1.161	1.135	1.188	1.217	1.074	0.766
9	0.779	0.976	1.143	1.144	1.224	1.065	1.166	1.117	1.151	1.052	1.199	1.166	1.210	1.033	0.786
10	0.653	0.963	1.130	1.229	1.130	1.175	1.057	1.186	1.082	1.169	1.131	1.193	1.196	0.971	0.659
11	0.567	0.928	1.024	1.003	1.127	1.113	1.196	1.158	1.192	1.113	1.149	1.014	1.033	0.936	0.572
12		0.824	0.884	1.171	0.999	1.158	1.145	1.182	1.130	1.170	1.014	1.176	0.895	0.839	
13		0.484	0.982	0.877	1.080	1.157	1.177	1.188	1.167	1.153	1.054	0.848	0.973	0.490	
14			0.484	0.846	0.980	1.026	1.014	1.067	1.023	0.991	0.955	0.818	0.474		
15					0.680	0.699	0.838	0.758	0.842	0.706	0.584				

FLUX MAP 2-1-32

DATE APR 19, 1975 APPROXIMATE TIME OF MAP 1030 - 1230

POWER 85.0 PERCENT OF FULL POWER CONTROL BANK D AT 193 STEPS WITHDRAWN

BORON 765 PPM PRESSURE 2251 PSIA RCS T-AV 554 DEGREES F

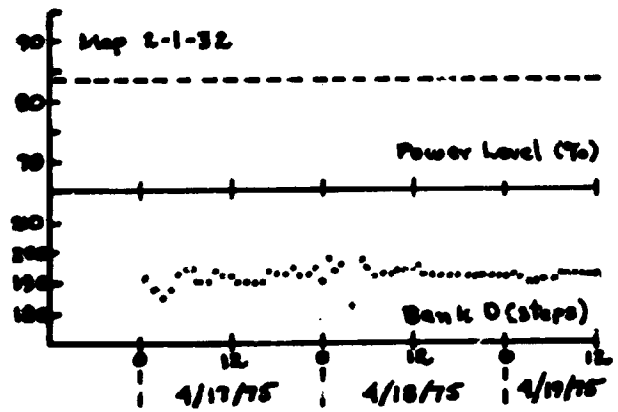

TABLE 3.3.2-8 Summary of Power Distribution Parameters for Flux Map 2-1-32

TOTAL NORMALIZED REACTION RATE INTEGRALS FLUX MAP 2-1-32 4-19-75

	R	P	N	M	L	K	J	H	G	F	E	D	C	B	A
1							0.593								
2			0.428			1.101									
3										1.115		0.851			
4			0.861					1.272							
5					1.231				1.250		1.268		1.185		
6															
7				1.107			1.288								
8	0.646				1.096		1.077			1.272		1.304	1.142		
9									1.256		1.262				
10							1.015								
11	0.522							1.095							0.504
12						1.291			1.076						
13			0.925		1.101									0.445	
14							0.863			1.129		0.708			
15								0.640							

REGION 1 (RODDED) REACTION RATES FLUX MAP 2-1-32 4-19-75

	R	P	N	M	L	K	J	H	G	F	E	D	C	B	A
1							0.793								
2			0.414			1.208									
3										1.176		0.783			
4			0.831					0.845							
5					1.175				1.326		1.370		1.233		
6															
7				1.050			1.303								
8	0.674				1.074		1.039			1.328		0.845	1.099		
9									1.270		1.322				
10							1.048								
11	0.599							1.114							0.533
12						1.418			1.058						
13			0.799		1.254									0.466	
14							0.902			1.238		0.734			
15								0.689							

REGION 2 (UNRODDED) REACTION RATES FLUX MAP 2-1-32 4-19-75

	R	P	N	M	L	K	J	H	G	F	E	D	C	B	A
1							0.686								
2			0.429			1.094									
3										1.110		0.856			
4			0.363					1.302							
5					1.235				1.245		1.261		1.182		
6															
7				1.111			1.287								
8	0.644				1.097		1.079			1.268		1.336	1.146		
9									1.255		1.258				
10							1.013								
11	0.517							1.094							0.502
12						1.282			1.077						
13			0.828		1.176									0.443	
14							0.860			1.122		0.706			
15								0.636							

AVERAGE AXIAL CONDITIONS FLUX MAP 2-1-32 4-19-75
POWER LEVEL EDITED AT 3250.0 MEGAWATTS THERMAL AVERAGE KW/FT = 6.700

POINT	KW/FT	POINT	KW/FT
1	1.450	32	8.490
2	1.777	33	8.530
3	2.338	34	8.538
4	2.875	35	8.516
5	3.341	36	8.466
6	3.502	37	8.397
7	4.349	38	9.076
8	4.972	39	7.413
9	5.492	40	8.231
10	5.903	41	8.351
11	6.297	42	8.406
12	6.616	43	8.414
13	6.872	44	8.390
14	7.067	45	8.317
15	7.205	46	8.189
16	7.210	47	8.003
17	6.638	48	7.765
18	7.497	49	7.207
19	7.793	50	6.637
20	7.960	51	7.036
21	8.086	52	6.849
22	8.168	53	6.557
23	8.228	54	6.107
24	8.259	55	5.717
25	8.254	56	5.155
26	8.218	57	4.508
27	8.007	58	3.756
28	7.289	59	2.874
29	8.152	60	2.106
30	8.338	61	2.120
31	8.429		

FRACTION OF AVERAGE AXIAL POWER PRODUCED IN EACH REGION

REGION NO.	TOP	BOTTOM	REGION KW/FT	FRACTION OF POWER	
1	1	9	3.328	0.0662	(RODDED)
2	9	61	7.219	0.9338	(UNRODDED)

INFERRED FDHN FLUX MAP 2-1-32 4-19-75

	R	P	N	M	L	K	J	H	G	F	E	D	C	B	A
1					0.506	0.674	0.804	0.724	0.884	0.688	0.597				
2				0.476	0.839	0.959	0.995	0.978	1.025	0.997	1.014	0.976	0.834	0.474	
3			0.478	0.971	0.875	1.060	1.133	1.172	1.207	1.180	1.155	1.078	0.867	0.962	0.474
4			0.845	0.977	1.172	0.994	1.154	1.153	1.180	1.131	1.167	1.012	1.175	0.869	0.836
5	0.603	0.906	1.099	1.001	1.125	1.094	1.188	1.111	1.148	1.107	1.158	1.013	1.078	0.976	0.596
6	0.697	1.028	1.174	1.173	1.106	1.159	1.066	1.152	1.008	1.144	1.127	1.176	1.153	1.012	0.687
7	0.831	1.011	1.193	1.151	1.198	1.070	1.178	1.132	1.174	1.064	1.211	1.171	1.208	1.021	0.840
8	0.749	1.059	1.201	1.199	1.155	1.190	1.136	1.160	1.114	1.175	1.137	1.205	1.21[illegible]	1.070	0.756
9	0.831	1.011	1.187	1.188	1.215	1.069	1.178	1.118	1.150	1.040	1.164	1.152	1.208	1.021	0.790
10	0.686	1.012	1.153	1.220	1.145	1.182	1.062	1.177	1.052	1.146	1.098	1.158	1.182	0.977	0.662
11	0.596	0.976	1.078	0.999	1.150	1.129	1.201	1.151	1.181	1.093	1.129	0.997	1.042	0.942	0.576
12		0.841	0.879	1.174	1.008	1.178	1.157	1.181	1.122	1.152	0.992	1.154	0.906	0.847	
13		0.480	0.975	0.872	1.076	1.157	1.173	1.172	1.164	1.154	1.075	0.857	0.984	0.495	
14			0.488	0.839	0.973	1.009	0.993	1.044	1.002	1.020	0.972	0.824	0.479		
15					0.595	0.685	0.819	0.740	0.823	0.692	0.594				

FLUX MAP 2-1-33

DATE MAY 22, 1975 APPROXIMATE TIME OF MAP 0900 - 1200

POWER 85.0 PERCENT OF FULL POWER CONTROL BANK D AT 193 STEPS WITHDRAWN

BORON 707 PPM PRESSURE 2251 PSIA RCS T-AV 554 DEGREES F

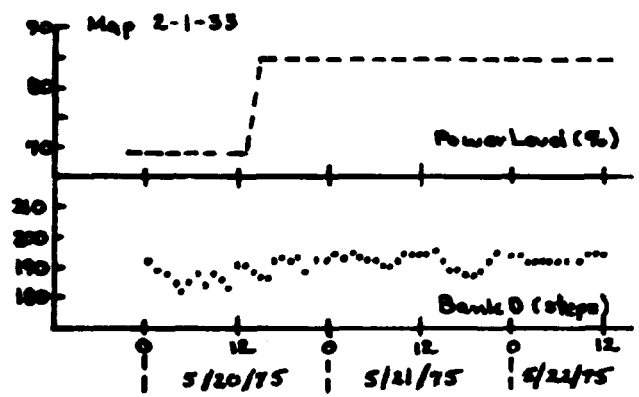

TABLE 3.3.2-9 Summary of Power Distribution Parameters for Flux Map 2-1-33

TOTAL NORMALIZED REACTION RATE INTEGRALS FLUX MAP 2-1-33 5-22-75

	R	P	N	M	L	K	J	H	G	F	E	D	C	B	A
1							0.695								
2			0.450												
3										1.108		0.859			
4			0.855												
5					1.260				1.264		1.263		1.187		
6															
7				1.116			1.292								
8	0.655				1.107					1.291			1.138		
9									1.276		1.302				
10							1.038								
11	0.522							1.104							0.527
12						1.293			1.108						
13			0.833											0.449	
14							0.867			1.130					
15															

REGION 1 (RODDED) REACTION RATES FLUX MAP 2-1-33 5-22-75

	R	P	N	M	L	K	J	H	G	F	E	D	C	B	A
1							0.698								
2			0.412												
3										1.156		0.829			
4			0.696												
5					1.201				1.354		1.178		1.230		
6															
7				1.065			1.300								
8	0.671				1.153					1.433			1.087		
9									1.277		1.398				
10							1.066								
11	0.585							1.116							0.552
12						1.191			1.063						
13			0.790											0.398	
14							0.893					1.208			
15															

REGION 2 (UNPOODED) REACTION RATES PLUX MAP 2-1-33 5-22-75

	R	P	N	M	L	K	J	H	G	F	E	D	C	B	A
1							0.695								
2			0.453												
3										1.104		0.861			
4			0.977												
5					1.265				1.257		1.270		1.184		
6															
7				1.120			1.292								
8	0.654				1.103					1.200			1.142		
9									1.276		1.295				
10							1.036								
11	0.517							1.103							0.525
12						1.301			1.112						
13			0.836											0.453	
14							0.865					1.124			
15															

AVERAGE AXIAL CONDITIONS FLUX MAP 2-1-33 5-22-75
PDQ DECK USED = HFP03K
POWER LEVEL EDITED AT 3250.0 MEGAWATTS THERMAL AVERAGE KW/FT = 6.700

POINT	KW/FT	POINT	KW/FT
1	1.399	32	8.340
2	1.845	33	8.373
3	2.435	34	8.377
4	3.005	35	8.350
5	3.490	36	8.301
6	3.690	37	8.223
7	4.424	38	7.924
8	5.076	39	7.315
9	5.607	40	8.010
10	6.008	41	8.194
11	6.462	42	8.242
12	6.762	43	8.266
13	7.002	44	8.251
14	7.106	45	8.195
15	7.311	46	8.088
16	7.300	47	7.925
17	6.799	48	7.706
18	7.458	49	7.200
19	7.817	50	6.610
20	7.969	51	7.027
21	8.081	52	6.896
22	8.150	53	6.644
23	8.196	54	6.296
24	8.200	55	5.857
25	8.196	56	5.316
26	8.141	57	4.681
27	7.928	58	3.930
28	7.270	59	3.066
29	7.945	60	2.238
30	8.199	61	2.259
31	8.201		

FRACTION OF AVERAGE AXIAL POWER PRODUCED IN EACH REGION

REGION NO.	TOP	BOTTOM	REGION KW/FT	FRACTION OF POWER	
1	1	9	3.434	0.0683	(RODDED)
2	9	61	7.202	0.9317	(UNRODDED)

	R	P	N	M	L	K	J	H	G	F	E	D	C	B	A
1					0.582	0.670	0.790	0.719	0.798	0.677	0.588				
2				0.496	0.873	1.019	0.987	0.971	1.018	0.981	0.998	0.960	0.834	0.474	
3			0.406	0.987	0.890	1.083	1.150	1.140	1.162	1.151	1.136	1.069	0.866	0.961	0.474
4			0.838	0.872	1.175	1.007	1.169	1.132	1.140	1.110	1.154	1.001	1.165	0.863	0.829
5	0.590	0.978	1.081	1.087	1.140	1.109	1.165	1.090	1.143	1.100	1.142	1.002	1.069	0.968	0.592
6	0.699	1.031	1.173	1.170	1.114	1.163	1.059	1.148	1.009	1.136	1.111	1.163	1.143	1.004	0.601
7	0.834	1.014	1.198	1.149	1.197	1.064	1.168	1.121	1.179	1.069	1.212	1.139	1.181	1.007	0.829
8	0.751	1.063	1.199	1.194	1.155	1.185	1.121	1.148	1.119	1.182	1.139	1.174	1.193	1.055	0.747
9	0.834	1.014	1.191	1.180	1.216	1.073	1.185	1.118	1.156	1.052	1.182	1.142	1.181	1.007	0.817
10	0.679	1.000	1.139	1.221	1.159	1.197	1.074	1.183	1.055	1.162	1.122	1.183	1.166	1.011	0.685
11	0.589	0.964	1.066	1.089	1.141	1.129	1.203	1.153	1.192	1.115	1.153	1.018	1.077	0.974	0.595
12			0.835	0.877	1.179	1.089	1.171	1.151	1.189	1.141	1.175	1.012	1.222	0.906	0.857
13			0.479	0.973	0.877	1.085	1.154	1.165	1.181	1.174	1.156	1.076	0.906	1.005	0.495
14				0.479	0.844	0.969	1.005	0.988	1.035	0.993	1.010	0.974	0.834	0.495	
15					0.592	0.681	0.813	0.732	0.817	0.685	0.595				

AVERAGE AXIAL CONDITIONS FLUX MAP 2-1-33 5-22-75
PDQ DECK USED = HFPOSK
POWER LEVEL EDITED AT 3250.0 MEGAWATTS THERMAL AVERAGE KW/FT = 6.700

POINT	KW/FT	POINT	KW/FT
1	1.402	32	8.339
2	1.849	33	8.371
3	2.442	34	8.375
4	3.013	35	8.348
5	3.499	36	8.300
6	3.699	37	8.222
7	4.436	38	7.922
8	5.089	39	7.313
9	5.614	40	8.008
10	6.087	41	8.192
11	6.461	42	8.241
12	6.761	43	8.264
13	7.001	44	8.250
14	7.185	45	8.194
15	7.310	46	8.086
16	7.299	47	7.923
17	6.797	48	7.705
18	7.457	49	7.206
19	7.816	50	6.609
20	7.968	51	7.026
21	8.079	52	6.895
22	8.140	53	6.643
23	8.194	54	6.295
24	8.206	55	5.856
25	8.194	56	5.315
26	8.139	57	4.680
27	7.926	58	3.929
28	7.268	59	3.065
29	7.944	60	2.238
30	8.197	61	2.258
31	8.279		

FRACTION OF AVERAGE AXIAL POWER PRODUCED IN EACH REGION

REGION NO.	TOP	BOTTOM	REGION KW/FT	FRACTION OF POWER	
1	1	9	3.442	0.0685	(RODDED)
2	9	61	7.201	0.9315	(UNRODDED)

INFERRED FDHH FLUX MAP 2-1-33 5-22-75
FOQ DECK USED = NFP05K

	R	P	N	M	L	K	J	H	G	F	E	D	C	B	A
1					0.588	0.677	0.797	0.724	0.797	0.698	0.599				
2			0.495	0.854	0.994	0.980	0.978	1.006	0.996	0.998	0.958	0.824	0.478		
3		0.400	0.971	0.890	1.077	1.157	1.121	1.166	1.140	1.146	1.058	0.870	0.950	0.478	
4		0.820	0.877	1.157	1.027	1.156	1.137	1.124	1.122	1.149	1.018	1.152	0.879	0.838	
5	0.592	0.964	1.055	1.019	1.136	1.124	1.157	1.107	1.139	1.117	1.139	1.023	1.066	0.975	0.599
6	0.702	1.017	1.174	1.167	1.131	1.158	1.079	1.147	1.037	1.137	1.127	1.152	1.146	0.999	0.690
7	0.827	1.014	1.160	1.156	1.180	1.085	1.165	1.136	1.179	1.093	1.200	1.163	1.177	1.028	0.840
8	0.751	1.044	1.193	1.172	1.165	1.181	1.136	1.142	1.137	1.180	1.153	1.166	1.204	1.059	0.762
9	0.678	0.982	1.127	1.203	1.152	1.173	1.081	1.172	1.076	1.160	1.141	1.174	1.184	0.992	0.685
10	0.678	0.982	1.127	1.203	1.152	1.173	1.081	1.172	1.076	1.160	1.141	1.174	1.184	0.992	0.685
11	0.588	0.959	1.049	1.036	1.146	1.141	1.186	1.161	1.183	1.133	1.152	1.041	1.061	0.969	0.595
12		0.838	0.990	1.163	1.036	1.166	1.160	1.167	1.149	1.165	1.034	1.182	0.902	0.844	
13		0.488	0.971	0.890	1.086	1.154	1.141	1.170	1.157	1.161	1.078	0.902	0.984	0.494	
14			0.488	0.842	0.965	0.988	0.985	1.014	1.006	1.009	0.986	0.847	0.494		
15					0.592	0.682	0.804	0.729	0.821	0.697	0.605				

FLUX MAP 2-1-34

DATE JUL 18, 1975 APPROXIMATE TIME OF MAP 1400 - 1700

POWER 85.0 PERCENT OF FULL POWER CONTROL BANK D AT 191 STEPS WITHDRAWN

BORON 652 PPM PRESSURE 2255 PSIA RCS T-AV 554 DEGREES F

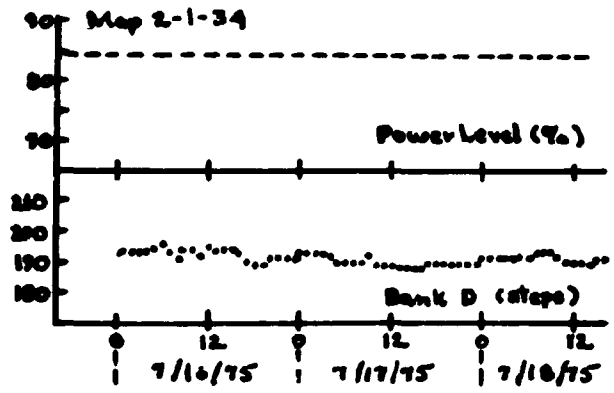

TABLE 3.3.2-10 Summary of Power Distribution Parameters for Flux Map 2-1-34

TOTAL NORMALIZED REACTION RATE INTEGRALS FLUX MAP 2-1-34 7-10-75

	R	P	N	M	L	K	J	H	G	F	E	D	C	B	A
1										0.574					
2						1.056									
3								1.040							
4								1.217							
5											1.203		1.133		
6	0.575							1.222							
7				1.074			1.239			0.990					
8					1.056		1.039			1.191			1.049		
9									1.218		1.231				
10							1.002					1.214			
11	0.501							1.055			1.193				0.499
12						1.202									
13			0.781											0.434	
14							0.825			1.098					
15															

REGION 1 (HOODED) REACTION RATES FLUX MAP 2-1-34 7-18-75

	R	P	O	N	L	K	J	H	G	F	E	D	C	B	A
1										0.629					
2						11.155									
3								1.085							
4								0.743							
5											1.308		1.197		
6	0.645							1.346							
7				0.998			1.275			0.975					
8					0.945		0.944			1.193			0.992		
9									1.259		1.315				
10							1.027					1.303			
11	0.591							0.940			1.187				0.541
12						11.259									
13			0.706											0.409	
14							0.899			1.145					
15															

REGION 2 (UNROODED) REACTION RATES FLUX MAP 2-1-34 7-10-75

	R	P	N	M	L	K	J	H	G	F	E	D	C	B	A
1										0.569					
2						1.048									
3								1.044							
4								1.250							
5											1.194		1.127		
6	0.569							1.211							
7				1.081			1.236			0.992					
8					1.066		1.047			1.191			1.054		
9									1.214		1.224				
10							1.000					1.206			
11	0.494							1.065			1.193				0.469
12						1.284									
13			0.790											0.437	
14							0.818			1.094					
15															

AVERAGE AXIAL CONDITIONS — FLUX MAP 2-1-34 — 7-18-75

POWER LEVEL EDITED AT 3250.0 MEGAWATTS THERMAL — AVERAGE KW/FT = 6.700

POINT	KW/FT	POINT	KW/FT
1	1.496	32	0.246
2	1.057	33	0.290
3	2.355	34	0.312
4	2.910	35	0.313
5	3.390	36	0.291
6	3.591	37	0.245
7	4.216	38	0.061
8	4.069	39	0.249
9	5.322	40	7.982
10	5.790	41	0.220
11	6.248	42	0.303
12	6.575	43	0.340
13	6.828	44	0.353
14	7.018	45	0.325
15	7.154	46	0.249
16	7.186	47	0.115
17	6.695	48	7.931
18	7.202	49	7.546
19	7.630	50	6.716
20	7.810	51	7.239
21	7.920	52	7.190
22	8.006	53	6.959
23	8.064	54	6.632
24	8.082	55	6.190
25	8.077	56	5.659
26	8.044	57	5.031
27	7.915	58	4.259
28	7.158	59	3.365
29	7.777	60	2.409
30	8.087	61	2.465
31	8.183		

FRACTION OF AVERAGE AXIAL POWER PRODUCED IN EACH REGION

REGION NO.	TOP	BOTTOM	REGION KW/FT	FRACTION OF POWER	
1	1	10	3.574	0.0800	(RODDED)
2	10	61	7.252	0.9200	(UNRODDED)

	R	P	N	M	L	K	J	H	G	F	E	D	C	B	A
1					0.599	0.691	0.805	0.743	0.785	0.674	0.504				
2				0.496	0.838	0.975	0.965	1.002	1.016	0.990	0.960	0.951	0.818	0.497	
3			0.408	0.969	0.906	1.050	1.146	1.137	1.174	1.145	1.155	1.064	0.908	0.971	0.497
4			0.820	0.886	1.150	1.040	1.135	1.171	1.155	1.171	1.141	1.044	1.150	0.900	0.841
5		0.986	0.954	1.035	1.069	1.155	1.169	1.185	1.175	1.185	1.141	1.129	1.043	1.061	0.979	0.602
6		0.676	0.963	1.170	1.167	1.167	1.160	1.106	1.160	1.098	1.143	1.142	1.140	1.150	0.988	0.694
7		0.787	0.977	1.190	1.169	1.170	1.107	1.162	1.150	1.145	1.082	1.148	1.144	1.127	1.007	0.811
8		0.720	0.986	1.192	1.140	1.173	1.160	1.155	1.131	1.135	1.141	1.141	1.121	1.160	1.016	0.742
9		0.797	0.909	1.160	1.176	1.103	1.104	1.156	1.146	1.142	1.085	1.153	1.144	1.125	1.007	0.794
10		0.604	0.975	1.135	1.177	1.156	1.157	1.097	1.161	1.097	1.143	1.140	1.139	1.150	0.972	0.602
11		0.594	0.966	1.047	1.182	1.190	1.185	1.181	1.171	1.182	1.131	1.120	1.039	1.061	0.963	0.591
12			0.820	0.892	1.132	1.102	1.203	1.193	1.152	1.176	1.131	1.036	1.145	0.916	0.840
13			0.408	0.954	0.892	1.121	1.179	1.132	1.137	1.162	1.191	1.100	0.916	0.980	0.501
14				0.408	0.826	0.957	0.966	0.980	0.989	1.030	1.023	1.014	0.872	0.501	
15					0.588	0.670	0.790	0.722	0.836	0.718	0.623				

FLUX MAP 2-1-35

DATE AUG 22, 1975 APPROXIMATE TIME OF MAP 1400 - 1600

POWER 85.0 PERCENT OF FULL POWER CONTROL BANK D AT 193 STEPS WITHDRAWN

BORON 587 PPM PRESSURE 2253 PSIA RCS T-AV 554 DEGREES F

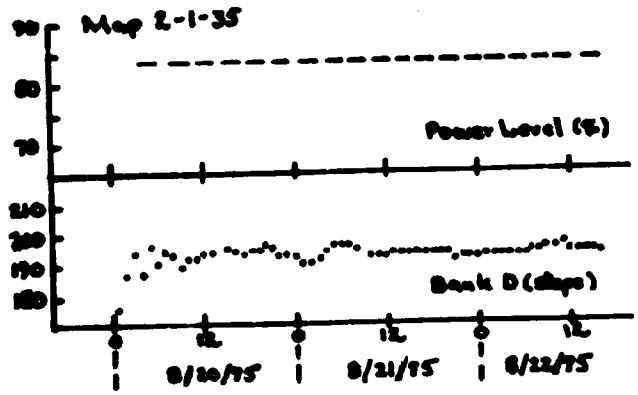

TABLE 3.3.2-11 Summary of Power Distribution Parameters for Flux Map 2-1-35

TOTAL NORMALIZED REACTION RATE INTEGRALS FLUX MAP 2-1-35 8-22-75

	R	P	N	M	L	K	J	H	G	F	E	D	C	B	A
1															
2								1.082							
3														0.434	
4								1.199							
5											1.205		1.128		
6			1.068					1.202							
7				1.067			1.236								
8	0.621									1.216		1.206	1.053		
9									1.229		1.211				0.652
10							1.012					1.211			
11	0.490							1.058							0.495
12						1.183			1.044						
13					1.124										
14										1.081					
15					0.493										

REGION 1 (RODDED) REACTION RATES FLUX MAP 2-1-35 8-22-75

	R	P	N	M	L	K	J	H	G	F	E	D	C	B	A
1															
2								1.239							
3														0.447	
4								0.758							
5											1.288		1.204		
6			1.066					1.268							
7				1.033			1.333								
8	0.628									1.162		0.721	1.007		
9									1.329		1.293				0.730
10							1.044					1.395			
11	0.490							0.925							0.503
12						1.114			0.914						
13					1.220										
14										1.260					
15					0.538										

REGION 2 (UNPOISONED) REACTION RATES FLUX MAP 2-1-35 8-22-75

	R	P	N	M	L	K	J	H	G	F	E	D	C	B	A
1															
2								1.069							
3														0.433	
4								1.236							
5											1.198		1.122		
6			1.368					1.197							
7				1.069			1.220								
8	0.620									1.221		1.247	1.057		
9									1.221		1.204				0.645
10							1.009					1.196			
11	0.490							1.069							0.407
12						1.189			1.054						
13					1.116										
14										1.066					
15					0.499										

AVERAGE AXIAL CONDITIONS FLUX MAP 2-1-35 8-22-75
PDQ PECK USED = NFPOSK
POWER LEVEL EDITED AT 3250.0 MEGAWATTS THERMAL AVERAGE KW/FT = 6.700

POINT	KW/FT	POINT	KW/FT
1	1.676	32	8.089
2	2.205	33	8.090
3	2.863	34	8.074
4	3.466	35	8.033
5	3.967	36	7.969
6	4.161	37	7.868
7	4.971	38	7.503
8	5.630	39	6.999
9	6.140	40	7.665
10	6.603	41	7.810
11	6.991	42	7.845
12	7.285	43	7.857
13	7.494	44	7.838
14	7.635	45	7.775
15	7.711	46	7.680
16	7.606	47	7.548
17	7.083	48	7.362
18	7.747	49	6.805
19	8.054	50	6.420
20	8.172	51	6.816
21	8.241	52	6.690
22	8.262	53	6.469
23	8.258	54	6.162
24	8.230	55	5.752
25	8.176	56	5.246
26	8.077	57	4.628
27	7.766	58	3.898
28	7.188	59	3.008
29	7.810	60	2.320
30	8.010	61	2.196
31	8.059		

FRACTION OF AVERAGE AXIAL POWER PRODUCED IN EACH REGION

REGION NO.	TOP	BOTTOM	REGION KW/FT	FRACTION OF POWER	
1	1	9	3.895	0.0775	(RODDED)
2	9	61	7.131	0.9225	(UNRODDED)

INVERSED FDWH FLUX MAP 2-1-35 8-22-75
PDQ DECK USED = HFPDSK

	R	P	N	M	L	K	J	H	G	F	E	D	C	B	A
1					0.605	0.697	0.821	0.745	0.821	0.697	0.605				
2				0.492	0.845	0.984	1.008	1.005	1.034	1.005	1.008	0.992	0.867	0.502	
3			0.492	0.900	0.897	1.096	1.179	1.161	1.185	1.161	1.165	1.083	0.915	0.999	0.502
4			0.849	0.897	1.172	1.031	1.178	1.156	1.156	1.156	1.163	1.031	1.150	0.896	0.855
5	0.607	0.989	1.081	1.031	1.150	1.143	1.176	1.142	1.176	1.131	1.142	1.023	1.065	0.976	0.600
6	0.700	1.012	1.164	1.171	1.147	1.181	1.078	1.162	1.070	1.151	1.131	1.154	1.145	0.999	0.691
7	0.824	1.010	1.165	1.157	1.180	1.086	1.170	1.135	1.161	1.082	1.185	1.149	1.158	1.002	0.786
8	0.748	1.040	1.199	1.162	1.146	1.177	1.143	1.145	1.139	1.169	1.139	1.157	1.175	1.015	0.713
9	0.824	1.010	1.157	1.159	1.214	1.105	1.193	1.147	1.165	1.069	1.154	1.137	1.153	0.978	0.786
10	0.670	0.970	1.114	1.122	1.180	1.201	1.105	1.189	1.088	1.155	1.116	1.148	1.150	0.972	0.672
11	0.582	0.948	1.037	1.011	1.101	1.126	1.189	1.169	1.181	1.122	1.126	1.017	1.069	0.956	0.587
12		0.814	0.861	1.145	1.003	1.124	1.136	1.167	1.139	1.154	1.024	1.150	0.885	0.821	
13		0.472	0.961	0.880	1.060	1.132	1.116	1.173	1.152	1.160	1.082	0.898	0.946	0.475	
14			0.483	0.826	0.962	0.906	0.993	1.041	1.012	1.015	0.991	0.851	0.493		
15					0.505	0.674	0.794	0.750	0.827	0.701	0.609				

AVERAGE AXIAL CONDITIONS FLUX MAP 2-1-35 8-22-75
PDQ DECK USED = HFP07K
POWER LEVEL EDITED AT 3250.0 MEGAWATTS THERMAL AVERAGE KW/FT = 6.700

POINT	KW/FT	POINT	KW/FT
1	1.670	32	8.091
2	2.197	33	8.092
3	2.842	34	8.076
4	3.453	35	8.035
5	3.952	36	7.971
6	4.146	37	7.871
7	4.952	38	7.505
8	5.609	39	7.001
9	6.130	40	7.667
10	6.606	41	7.813
11	6.994	42	7.847
12	7.288	43	7.859
13	7.496	44	7.840
14	7.638	45	7.770
15	7.713	46	7.682
16	7.600	47	7.550
17	7.005	48	7.364
18	7.750	49	6.007
19	8.057	50	6.422
20	8.175	51	6.018
21	8.244	52	6.701
22	8.265	53	6.472
23	8.260	54	6.164
24	8.232	55	5.754
25	8.178	56	5.248
26	8.079	57	4.630
27	7.760	58	3.099
28	7.182	59	3.001
29	7.813	60	2.321
30	8.012	61	2.196
31	8.062		

FRACTION OF AVERAGE AXIAL POWER PRODUCED IN EACH REGION

REGION NO.	TOP	BOTTOM	REGION KW/FT	FRACTION OF POWER	
1	1	9	3.881	0.0772	(RODDED)
2	9	61	7.134	0.9228	(UNRODDED)

INFERRED POWER PLUX MAP 2-1-35 8-22-75
POW DECK USED = HFP07E

	R	P	N	M	L	K	J	H	G	F	E	D	C	B	A
1					0.611	0.705	0.821	0.751	0.821	0.705	0.611				
2			0.504	0.855	0.995	1.004	1.010	1.020	1.013	1.004	0.984	0.849	0.502		
3		0.504	0.906	0.922	1.093	1.185	1.140	1.189	1.140	1.156	1.066	0.917	0.981	0.502	
4		0.053	0.922	1.173	1.050	1.173	1.173	1.145	1.173	1.144	1.048	1.152	0.910	0.845	
5	0.609	0.991	1.076	1.050	1.140	1.151	1.168	1.159	1.160	1.144	1.132	1.043	1.057	0.976	0.599
6	0.701	1.000	1.166	1.157	1.160	1.166	1.097	1.152	1.091	1.145	1.144	1.139	1.146	0.905	0.691
7	0.817	1.015	1.140	1.160	1.166	1.184	1.160	1.150	1.155	1.103	1.177	1.167	1.143	1.011	0.783
8	0.747	1.024	1.105	1.136	1.197	1.165	1.157	1.133	1.154	1.160	1.155	1.145	1.178	1.005	0.716
9	0.817	1.015	1.137	1.161	1.178	1.107	1.165	1.154	1.155	1.091	1.145	1.149	1.137	0.987	0.783
10	0.670	0.955	1.112	1.111	1.160	1.169	1.108	1.169	1.105	1.146	1.134	1.137	1.149	0.961	0.674
11	0.501	0.947	1.028	1.035	1.100	1.134	1.165	1.172	1.163	1.134	1.125	1.041	1.060	0.955	0.506
12		0.814	0.881	1.142	1.027	1.113	1.140	1.137	1.140	1.134	1.040	1.140	0.907	0.821	
13		0.481	0.965	0.901	1.052	1.132	1.095	1.159	1.120	1.163	1.083	0.920	0.948	0.485	
14			0.493	0.827	0.962	0.971	0.995	1.032	1.023	1.009	0.999	0.859	0.508		
15					0.584	0.674	0.785	0.754	0.824	0.708	0.614				

FLUX MAP 2-1-37

DATE	OCT 18, 1975		APPROXIMATE TIME OF MAP 1030 - 1200
POWER	81.0 PERCENT OF FULL POWER		CONTROL BANK D AT 196 STEPS WITHDRAWN
BORON	546 PPM	PRESSURE 2252 PSIA	RCS T-AV 555 DEGREES F

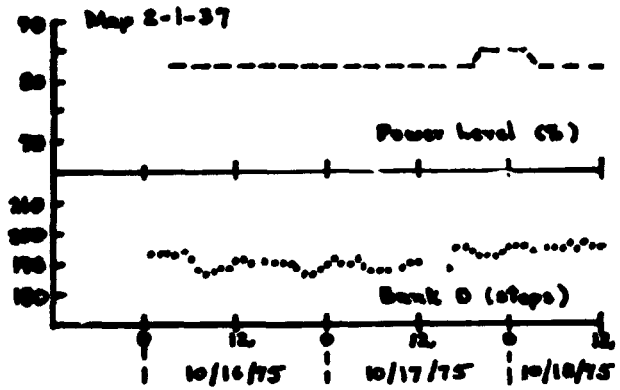

TABLE 3.3.2-12 Summary of Power Distribution Parameters for Flux Map 2-1-37

TOTAL NORMALIZED REACTION RATE INTEGRALS FLUX MAP 2-1-37 10-18-75

	R	P	N	M	L	K	J	H	G	F	E	D	C	B	A
1							0.669			0.592					
2						1.083		1.113							
3								1.084		1.086		0.899		0.458	
4		0.705	0.899					1.267							
5					1.261				1.268		1.239		1.159		
6	0.599		1.104			1.279		1.273						1.074	
7				1.123			1.302			1.063			1.195		
8	0.637		1.120		1.105		1.110			1.237		1.244	1.066		
9		0.877							1.276		1.283				0.602
10					1.114		1.072					1.254			
11	0.518				1.254			1.104			1.255				0.516
12						1.325			1.111			1.081			
13			0.822		1.171			1.102						0.447	
14			0.454							1.124		0.714			
15					0.501			0.634							

REGION 1 (ROD0KED) REACTION RATES FLUX MAP 2-1-37 10-18-75

	R	P	N	M	L	K	J	H	G	F	E	D	C	B	A
1							0.753			0.658					
2						1.167		1.214							
3								1.104		1.145		0.802		0.423	
4		0.603	0.741					0.829							
5					1.228				1.324		1.337		1.201		
6	0.644		1.215			1.297		1.361						1.168	
7				1.081			1.352			1.077			1.270		
8	0.696		1.159		1.080		1.008			1.286		0.898	1.076		
9		0.934							1.330		1.343				0.751
10					1.146		1.114					1.221			
11	0.554				1.269			1.083			1.235				0.540
12						1.298			1.095			0.652			
13			0.911		1.247			1.084						0.427	
14			0.439							1.159		0.724			
15					0.519			0.677							

REGION 2 (UNPOISONED) REACTION RATES FLUX MAP 2-1-37 10-18-75

	R	P	N	M	L	K	J	H	G	F	E	D	C	B	A
1							0.661			0.587					
2						1.076		1.104							
3								1.083		1.081		0.900		0.455	
4		0.706	0.913					1.306							
5					1.264				1.263		1.231		1.155		
6	0.595		1.095			1.278		1.266						1.066	
7				1.126			1.298			1.061			1.188		
8	0.632		1.125		1.107		1.112			1.233		1.274	1.065		
9		0.872							1.271		1.278				0.676
10					1.111		1.068					1.257			
11	0.506				1.252			1.106			1.257				0.514
12						1.329			1.113			1.119			
13			0.922		1.164			1.104						0.449	
14			0.456							1.121		0.714			
15					0.499			0.630							

AVERAGE AXIAL CONDITIONS — FLUX MAP 2-1-37 — 10-18-75

POWER LEVEL EDITED AT 3250.0 MEGAWATTS THERMAL — AVERAGE KW/FT = 6.700

POINT	KW/FT	POINT	KW/FT
1	1.096	32	7.921
2	2.269	33	7.933
3	2.974	34	7.921
4	3.626	35	7.885
5	4.164	36	7.833
6	4.279	37	7.752
7	5.199	38	7.455
8	5.069	39	6.822
9	6.410	40	7.501
10	6.083	41	7.755
11	7.107	42	7.813
12	7.431	43	7.837
13	7.607	44	7.830
14	7.705	45	7.780
15	7.748	46	7.707
16	7.648	47	7.570
17	6.925	48	7.402
18	7.700	49	6.883
19	7.959	50	6.421
20	8.050	51	6.876
21	8.096	52	6.781
22	8.114	53	6.563
23	8.106	54	6.260
24	8.067	55	5.857
25	8.001	56	5.352
26	7.908	57	4.736
27	7.645	58	4.083
28	6.911	59	3.110
29	7.668	60	2.344
30	7.843	61	2.350
31	7.895		

FRACTION OF AVERAGE AXIAL POWER PRODUCED IN EACH REGION

REGION NO.	TOP	BOTTOM	REGION KW/FT	FRACTION OF POWER	
1	1	9	4.067	0.0809	(RODDED)
2	9	61	7.105	0.9191	(UNRODDED)

	R	P	N	M	L	K	J	H	G	F	E	D	C	B	A
1					0.580	0.674	0.786	0.733	0.786	0.674	0.580				
2			0.502	0.834	0.969	0.985	0.996	1.015	0.996	0.985	0.969	0.834	0.502		
3		0.499	0.973	0.918	1.064	1.153	1.140	1.178	1.140	1.153	1.064	0.918	0.973	0.499	
4		0.829	0.916	1.161	1.055	1.172	1.167	1.151	1.167	1.172	1.055	1.161	0.916	0.829	
5	0.586	0.963	1.053	1.049	1.136	1.159	1.167	1.178	1.167	1.159	1.136	1.049	1.053	0.963	0.586
6	0.679	0.970	1.150	1.142	1.159	1.161	1.117	1.175	1.117	1.161	1.159	1.142	1.150	0.970	0.679
7	0.793	0.998	1.109	1.163	1.169	1.113	1.169	1.171	1.169	1.113	1.169	1.163	1.109	0.998	0.793
8	0.736	1.010	1.176	1.138	1.174	1.159	1.177	1.152	1.177	1.159	1.174	1.138	1.176	1.010	0.736
9	0.793	0.998	1.109	1.163	1.169	1.113	1.169	1.171	1.169	1.113	1.169	1.163	1.109	0.998	0.793
10	0.679	0.970	1.150	1.142	1.159	1.161	1.117	1.175	1.117	1.161	1.159	1.142	1.150	0.970	0.679
11	0.586	0.963	1.053	1.049	1.136	1.159	1.167	1.178	1.167	1.159	1.136	1.049	1.053	0.963	0.586
12		0.829	0.916	1.161	1.055	1.172	1.167	1.151	1.167	1.172	1.055	1.161	0.916	0.829	
13		0.499	0.973	0.918	1.064	1.153	1.140	1.178	1.140	1.153	1.064	0.918	0.973	0.499	
14			0.502	0.834	0.969	0.985	0.996	1.015	0.996	0.985	0.969	0.834	0.502		
15					0.580	0.674	0.786	0.733	0.786	0.674	0.580				

FLUX MAP 2-1-38

DATE	NOV 18, 1975	APPROXIMATE TIME OF MAP	1900 - 2000
POWER	84.0 PERCENT OF FULL POWER	CONTROL BANK D AT	199 STEPS WITHDRAWN
BORON	531 PPM PRESSURE 2259 PSIA	RCS T-AV	555 DEGREES F

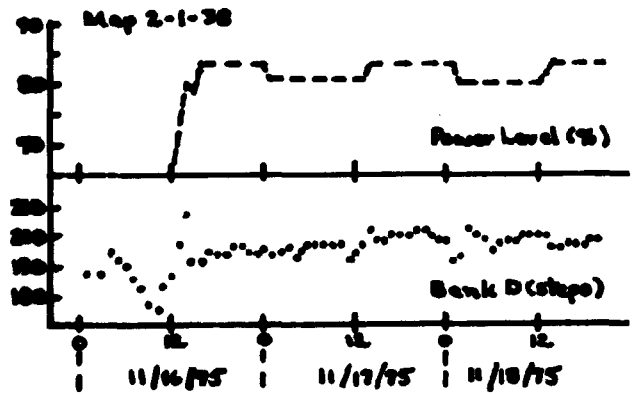

TABLE 3.3.2-13 Summary of Power Distribution Parameters for Flux Map 2-1-38

TOTAL NORMALIZED REACTION RATE INTEGRALS FLUX MAP 2-1-30 11-18-75

	R	P	H	N	L	K	J	M	G	F	E	D	C	B	A
1							0.670			0.591					
2						1.084		1.092							
3								1.098		1.091		0.906		0.450	
4		0.716	0.900					1.254							
5					1.279				1.255		1.252		1.171		
6	0.990		1.096			1.272		1.290						1.085	
7				1.115			1.296			1.062			1.196		
8	0.637		1.217		1.115		1.125			1.253		1.229	1.082		
9		0.803							1.279		1.207				0.680
10					1.130		1.079					1.240			
11	0.905				1.246			1.117			1.237				0.513
12						1.203			1.112			1.110			
13			0.820		1.199			1.077						0.455	
14			0.453							1.094		0.712			
15					0.498			0.636							

REGION 1 (RODDED) REACTION RATES FLUX MAP 2-1-38 11-10-75

	R	P	N	M	L	K	J	H	G	F	E	D	C	B	A
1							0.756			0.640					
2						1.229		1.209							
3								1.109		1.116		0.816		0.448	
4		0.666	0.847					0.939							
5					1.206				1.320		1.216		1.245		
6	0.677		1.106			1.325		1.374						1.180	
7				1.114			1.336			1.070			1.277		
8	0.690		1.146		1.129		1.030			1.343		0.710	1.077		
9		0.950							1.334		1.395				0.749
10					1.192		1.081					1.190			
11	0.551				1.231			1.090			1.263				0.564
12						1.218			1.017			0.739			
13			0.901		1.176			1.041						0.417	
14			0.402							1.133		0.662			
15					0.519			0.680							

REGION 2 (UNBOARDED) REACTION RATES FLUX MAP 2-1-38 11-18-75

	R	P	N	M	L	K	J	H	G	F	E	D	C	B	A
1							0.664			0.587					
2						1.074		1.084							
3								1.097		1.089		0.913		0.450	
4		0.720	0.913					1.276							
5					1.274				1.251		1.254		1.165		
6	0.000		1.090			1.269		1.284						1.078	
7				1.115			1.293			1.062			1.190		
8	0.632		1.120		1.114		1.131			1.247		1.266	1.083		
9		0.078							1.275		1.280				0.675
10					1.129		1.078					1.244			
11	0.902				1.247			1.119			1.235				0.509
12						1.288			1.119			1.136			
13			0.830		1.157			1.079						0.458	
14			0.451							1.091		0.715			
15					0.497			0.633							

AVERAGE AXIAL CONDITIONS FLUX MAP 2-1-38 11-18-75
PDQ DECK USED = HFP07K
POWER LEVEL SOLVED AT 3250.0 MEGAWATTS THERMAL AVERAGE KW/FT = 6.700

POINT	KW/FT	POINT	KW/FT
1	1.082	32	7.779
2	2.277	33	7.801
3	2.998	34	7.806
4	3.674	35	7.785
5	4.237	36	7.744
6	4.379	37	7.681
7	5.304	38	7.427
8	6.029	39	6.753
9	6.503	40	7.540
10	6.889	41	7.740
11	7.198	42	7.828
12	7.402	43	7.872
13	7.544	44	7.889
14	7.621	45	7.865
15	7.642	46	7.805
16	7.632	47	7.698
17	6.791	48	7.537
18	7.512	49	7.080
19	7.779	50	6.534
20	7.864	51	7.050
21	7.900	52	7.082
22	7.921	53	6.885
23	7.906	54	6.516
24	7.869	55	6.128
25	7.807	56	5.625
26	7.719	57	5.007
27	7.489	58	4.261
28	6.732	59	3.357
29	7.471	60	2.477
30	7.677	61	2.499
31	7.739		

FRACTION OF AVERAGE AXIAL POWER PRODUCED IN EACH REGION

REGION NO.	TOP	BOTTOM	REGION KW/FT	FRACTION OF POWER	
1	1	8	3.831	0.0667	(RODDED)
2	8	61	7.079	0.9333	(UNRODDED)

INFERRED PDNH FLUX MAP 2-1-38 11-18-75

PDQ DECK USED = HFPD7K

	R	P	O	N	L	K	J	H	G	F	E	D	C	B	A
1					0.592	0.674	0.778	0.719	0.785	0.660	0.503				
2			0.510	0.830	0.965	0.971	0.985	0.999	0.991	0.968	0.973	0.861	0.505		
3		0.499	0.984	0.933	1.047	1.134	1.130	1.170	1.130	1.145	1.072	0.931	0.987	0.500	
4		0.836	0.928	1.187	1.060	1.164	1.170	1.146	1.151	1.135	1.052	1.171	0.915	0.842	
5	0.807	0.974	1.069	1.062	1.151	1.157	1.186	1.163	1.145	1.135	1.131	1.044	1.055	0.969	0.593
6	0.672	0.978	1.153	1.156	1.189	1.154	1.109	1.181	1.102	1.155	1.157	1.123	1.128	0.973	0.683
7	0.790	1.006	1.146	1.170	1.180	1.116	1.179	1.102	1.172	1.114	1.170	1.126	1.089	0.981	0.796
8	0.730	1.037	1.204	1.162	1.190	1.195	1.199	1.165	1.157	1.150	1.156	1.124	1.157	0.991	0.719
9	0.810	1.012	1.149	1.199	1.196	1.134	1.201	1.179	1.156	1.096	1.159	1.143	1.118	0.985	0.786
10	0.677	0.977	1.166	1.165	1.176	1.170	1.139	1.188	1.112	1.149	1.135	1.125	1.131	0.962	0.675
11	0.576	0.939	1.219	1.160	1.134	1.165	1.195	1.192	1.187	1.142	1.122	1.049	1.073	0.953	0.505
12		0.824	0.909	1.153	1.046	1.154	1.164	1.146	1.165	1.149	1.059	1.190	0.936	0.842	
13		0.499	0.974	0.907	1.049	1.151	1.125	1.158	1.126	1.156	1.067	0.919	0.986	0.506	
14			0.502	0.832	0.944	0.953	0.997	1.006	0.987	0.982	0.967	0.826	0.495		
15					0.560	0.655	0.805	0.737	0.884	0.689	0.593				

AVERAGE AXIAL CONDITIONS FLUX MAP 2-1-38 11-18-75
PDQ DECK USED = HFPOOK
POWER LEVEL EDITED AT 3250.0 MEGAWATTS THERMAL AVERAGE KW/FT = 6.700

POINT	KW/FT	POINT	KW/FT
1	1.884	32	7.778
2	2.201	33	7.800
3	3.000	34	7.804
4	3.660	35	7.784
5	4.246	36	7.743
6	4.387	37	7.679
7	5.313	38	7.426
8	6.034	39	6.752
9	6.502	40	7.539
10	6.809	41	7.747
11	7.187	42	7.827
12	7.402	43	7.871
13	7.543	44	7.888
14	7.620	45	7.864
15	7.641	46	7.804
16	7.531	47	7.697
17	6.790	48	7.536
18	7.511	49	7.080
19	7.778	50	6.533
20	7.863	51	7.057
21	7.907	52	7.001
22	7.920	53	6.804
23	7.904	54	6.516
24	7.860	55	6.120
25	7.806	56	5.625
26	7.718	57	5.007
27	7.488	58	4.261
28	6.731	59	3.357
29	7.470	60	2.477
30	7.676	61	2.499
31	7.738		

FRACTION OF AVERAGE AXIAL POWER PRODUCED IN EACH REGION

REGION NO.	TOP	BOTTOM	REGION KW/FT	FRACTION OF POWER	
1	1	8	3.838	0.0668	(RODDED)
2	8	61	7.078	0.9332	(UNRODDED)

INFERRED POWER FLUX MAP 2-1-38 11-18-75

PDQ DECK USED = HFP09K

	R	P	N	M	L	K	J	H	G	F	E	D	C	B	A
1					0.597	0.882	0.779	0.726	0.782	0.670	0.580				
2			0.509	0.838	0.975	0.967	1.001	0.994	1.004	0.957	0.959	0.843	0.505		
3		0.504	0.974	0.930	1.048	1.143	1.118	1.182	1.117	1.148	1.055	0.936	0.972	0.502	
4		0.833	0.935	1.167	1.009	1.147	1.189	1.136	1.165	1.129	1.070	1.157	0.930	0.836	
5	0.587	0.971	1.054	1.081	1.142	1.170	1.170	1.180	1.136	1.151	1.123	1.060	1.050	0.976	0.598
6	0.674	0.962	1.156	1.142	1.172	1.145	1.133	1.173	1.124	1.139	1.161	1.124	1.135	0.968	0.691
7	0.709	1.018	1.127	1.174	1.163	1.137	1.166	1.196	1.156	1.121	1.158	1.145	1.080	0.997	0.796
8	0.739	1.013	1.205	1.140	1.195	1.179	1.205	1.149	1.168	1.147	1.168	1.115	1.161	0.986	0.726
9	0.801	1.014	1.129	1.192	1.174	1.147	1.177	1.186	1.148	1.121	1.152	1.156	1.104	1.000	0.786
10	0.679	0.961	1.152	1.141	1.101	1.158	1.140	1.169	1.134	1.142	1.153	1.115	1.134	0.955	0.680
11	0.578	0.943	1.015	1.077	1.125	1.175	1.172	1.196	1.169	1.156	1.114	1.073	1.065	0.958	0.587
12		0.824	0.928	1.147	1.071	1.144	1.173	1.124	1.169	1.132	1.081	1.185	0.954	0.836	
13		0.504	0.970	0.926	1.042	1.153	1.118	1.160	1.109	1.159	1.061	0.941	0.981	0.508	
14			0.505	0.828	0.948	0.942	1.009	0.996	1.010	0.978	0.972	0.826	0.502		
15					0.570	0.659	0.800	0.739	0.901	0.697	0.596				

FLUX MAP 2-1-42

DATE NOV 24, 1975 APPROXIMATE TIME OF MAP 1800 - 1900

POWER 83.5 PERCENT OF FULL POWER CONTROL BANK D AT 195 STEPS WITHDRAWN

BORON 524 PPM PRESSURE 2259 PSIA RCS T-AV 555 DEGREES F

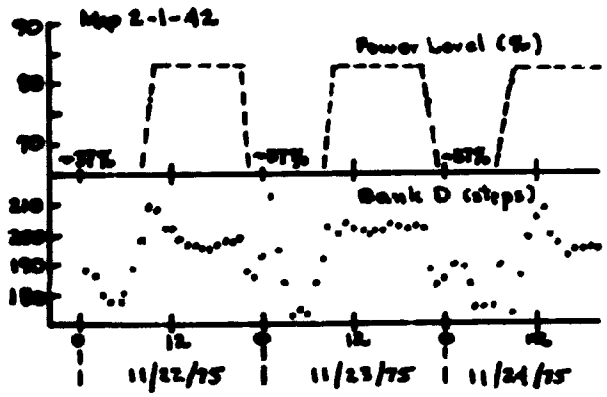

TABLE 3.3.2-14 Summary of Power Distribution Parameters for Flux Map 2-1-42

TOTAL NORMALIZED REACTION RATE INTEGRALS FLUX MAP 2-1-42 11-24-75

	R	P	M	N	L	K	J	H	G	F	E	D	C	B	A
1							0.668			0.591					
2						1.072		1.107							
3								1.075		1.082		0.898		0.451	
4			0.986					1.227							
5					1.249				1.257		1.237		1.161		
6	0.993		1.097			1.274		1.279						1.068	
7				1.108			1.291			1.074			1.192		
8	0.636		1.114		1.105		1.121			1.252		1.225	1.084		
9		0.871							1.278		1.265				0.673
10					1.122		1.082					1.247			
11	0.500				1.243			1.115			1.241				0.511
12						1.277			1.193			1.088			
13			0.926		1.159			1.081						0.453	
14			0.451							1.086		0.699			
15					0.502			0.632							

REGION 1 (POWDED) REACTION RATES FLUX MAP 2-1-42 11-24-75

	R	P	N	M	L	K	J	H	G	F	E	D	C	B	A
1							0.751			0.666					
2						1.192		1.240							
3								1.086		1.124		0.794		0.397	
4			0.827					0.700							
5					1.222				1.335		1.335		1.210		
6	0.627		1.060			1.333		1.370						1.160	
7				1.099			1.395			1.083			1.274		
8	0.702		1.121		1.101		1.082			1.346		0.868	1.080		
9		0.932							1.334		1.356				0.735
10					1.186		1.129					1.214			
11	0.539				1.240			1.077			1.219				0.526
12						1.247			1.041			0.768			
13			0.772		1.219			1.043						0.417	
14			0.463							1.124		0.628			
15					0.505			0.674							

REGION 2 (UNRODDED) REACTION RATES PLUX MAP 2-1-42 11-24-75

	R	P	N	M	L	K	J	H	G	F	E	D	C	B	A
1							0.660			0.584					
2						1.067		1.095							
3								1.074		1.070		0.908		0.456	
4			0.913					1.267							
5					1.252				1.250		1.229		1.157		
6	0.590		1.099			1.269		1.270						1.060	
7				1.109			1.281			1.073			1.185		
8	0.630		1.113		1.105		1.125			1.244		1.257	1.084		
9		0.865							1.273		1.257				0.667
10					1.116		1.070					1.250			
11	0.496				1.243			1.119			1.243				0.510
12						1.280			1.109			1.117			
13			0.831		1.154			1.084						0.456	
14			0.450							1.082		0.706			
15					0.502			0.620							

AVERAGE AXIAL CONDITIONS FLUX MAP 2-1-42 11-24-75
POWER LEVEL EDITED AT 3250.0 MEGAWATTS THERMAL AVERAGE KW/FT = 6.700

POINT	KW/FT	POINT	KW/FT
1	1.075	32	7.852
2	2.203	33	7.843
3	3.014	34	7.817
4	3.702	35	7.769
5	4.280	36	7.705
6	4.422	37	7.610
7	5.335	38	7.334
8	6.050	39	6.655
9	6.610	40	7.376
10	7.050	41	7.557
11	7.401	42	7.609
12	7.654	43	7.629
13	7.837	44	7.618
14	7.937	45	7.577
15	7.976	46	7.499
16	7.872	47	7.378
17	7.123	48	7.210
18	7.845	49	6.754
19	8.143	50	6.223
20	8.222	51	6.711
21	8.261	52	6.641
22	8.254	53	6.448
23	8.230	54	6.162
24	8.171	55	5.781
25	8.093	56	5.303
26	7.975	57	4.707
27	7.699	58	4.008
28	6.932	59	3.154
29	7.619	60	2.324
30	7.810	61	2.336
31	7.841		

FRACTION OF AVERAGE AXIAL POWER PRODUCED IN EACH REGION

REGION NO.	TOP	BOTTOM	REGION KW/FT	FRACTION OF POWER	
1	1	9	4.166	0.0829	(RODDED)
2	9	61	7.098	0.9171	(UNRODDED)

IMPERMOD PWRR FLUX MAP 2-1-42 11-24-75

	R	P	N	M	L	K	J	H	G	F	E	D	C	B	A
1					0.502	0.670	0.785	0.738	0.785	0.670	0.502				
2			0.505	0.925	0.966	0.967	1.005	1.007	1.005	0.967	0.966	0.825	0.505		
3		0.507	0.975	0.933	1.050	1.150	1.112	1.170	1.112	1.150	1.050	0.933	0.975	0.507	
4		0.837	0.940	1.159	1.074	1.140	1.166	1.120	1.166	1.140	1.074	1.159	0.940	0.837	
5	0.503	0.966	1.053	1.074	1.125	1.160	1.152	1.194	1.152	1.160	1.125	1.074	1.053	0.966	0.503
6	0.670	0.961	1.152	1.129	1.173	1.153	1.141	1.173	1.141	1.153	1.173	1.129	1.152	0.961	0.670
7	0.787	1.004	1.097	1.166	1.153	1.137	1.164	1.191	1.164	1.137	1.153	1.166	1.097	1.004	0.787
8	0.740	1.002	1.184	1.119	1.185	1.161	1.199	1.143	1.199	1.161	1.185	1.119	1.184	1.002	0.740
9	0.787	1.004	1.097	1.166	1.153	1.137	1.164	1.191	1.164	1.137	1.153	1.166	1.097	1.004	0.787
10	0.670	0.961	1.152	1.129	1.173	1.153	1.141	1.173	1.141	1.153	1.173	1.129	1.152	0.961	0.670
11	0.503	0.966	1.053	1.074	1.125	1.160	1.152	1.194	1.152	1.160	1.125	1.074	1.053	0.966	0.503
12		0.837	0.940	1.159	1.074	1.140	1.166	1.120	1.166	1.140	1.074	1.159	0.940	0.837	
13		0.507	0.975	0.933	1.050	1.150	1.112	1.170	1.112	1.150	1.050	0.933	0.975	0.507	
14			0.505	0.925	0.966	0.967	1.005	1.007	1.005	0.967	0.966	0.825	0.505		
15					0.502	0.670	0.785	0.738	0.785	0.670	0.502				

FLUX MAP 2-1-47

DATE. JAN 9, 1976 APPROXIMATE TIME OF MAP 1300 - 1430

POWER 74.0 PERCENT OF FULL POWER CONTROL BANK D AT 196 STEPS WITHDRAWN

BORON 474 PPM PRESSURE 2252 PSIA RCS T-AV 554 DEGREES F

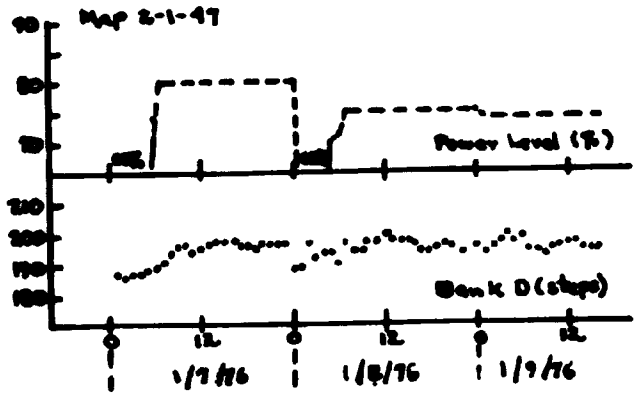

TABLE 3.3.2-15 Summary of Power Distribution Parameters for Flux Map 2-1-47

TOTAL NORMALIZED REACTION RATE INTEGRALS FLUX MAP 2-1-47 1- 9-76

	R	P	N	M	L	K	J	H	G	F	E	D	C	B	A
1							0.688			0.578					
2						1.072		1.107							
3										1.089		0.910		0.465	
4			0.917					1.241							
5					1.265				1.255		1.247		1.166		
6	0.502		1.396			1.262		1.273						1.074	
7				1.117			1.297			1.058			1.189		
8	0.696		1.108		1.109		1.126			1.249		1.236	1.075		
9		0.801							1.201		1.268				0.680
10					1.121		1.087					1.251			
11	0.503				1.244			1.112			1.199				0.508
12						1.299			1.106			1.098			
13			0.835		1.174			1.049						0.455	
14			0.445							1.100		0.707			
15					0.505			0.629							

REGION 1 (RODDED) REACTION RATES FLUX MAP 2-1-47 1- 9-76

	R	P	N	M	L	K	J	H	G	F	E	D	C	B	A
1							0.723			0.654					
2						1.139		1.263							
3										1.094		0.802		0.442	
4			0.867					0.841							
5					1.340				1.257		1.283		1.230		
6	0.599		1.232			1.127		1.348						1.132	
7				1.117			1.355			1.063			1.241		
8	0.691		1.071		1.070		1.050			1.298		0.947	1.030		
9		0.907							1.342		1.324				0.727
10					1.100		1.107					1.234			
11	0.546				1.199			1.067			1.286				0.534
12						1.293			1.026			0.804			
13			0.801		1.249			0.987						0.440	
14			0.410							1.140		0.697			
15					0.520			0.665							

	R	P	N	M	L	K	J	H	G	F	E	D	C	B	A
1							0.622			0.571					
2						1.066		1.092							
3										1.089		0.928		0.467	
4			0.922					1.279							
5					1.258				1.254		1.244		1.160		
6	0.580		1.004			1.256		1.266						1.069	
7				1.117			1.291			1.057			1.184		
8	0.631		1.112		1.113		1.133			1.244		1.264	1.079		
9		0.879							1.275		1.262				0.675
10					1.115		1.086					1.253			
11	0.499				1.248			1.116			1.191				0.506
12						1.299			1.114			1.126			
13			0.838		1.167			1.055						0.456	
14			0.449							1.096		0.708			
15					0.504			0.621							

AVERAGE AXIAL CONDITIONS — FLUX MAP 2-1-47 — 1- 9-76

POWER LEVEL EDITED AT 3250.0 MEGAWATTS THERMAL — AVERAGE KW/FT = 6.700

POINT	KW/FT	POINT	KW/FT
1	2.063	32	7.653
2	2.475	33	7.662
3	3.220	34	7.655
4	3.910	35	7.634
5	4.455	36	7.590
6	4.557	37	7.519
7	5.534	38	7.251
8	6.239	39	6.591
9	6.739	40	7.379
10	7.084	41	7.584
11	7.381	42	7.656
12	7.592	43	7.708
13	7.738	44	7.725
14	7.794	45	7.086
15	7.793	46	7.659
16	7.639	47	7.569
17	6.868	48	7.423
18	7.627	49	6.961
19	7.861	50	6.459
20	7.925	51	7.009
21	7.948	52	6.963
22	7.943	53	6.783
23	7.909	54	6.504
24	7.854	55	6.123
25	7.774	56	5.633
26	7.672	57	5.016
27	7.402	58	4.265
28	6.653	59	3.367
29	7.389	60	2.483
30	7.579	61	2.530
31	7.624		

FRACTION OF AVERAGE AXIAL POWER PRODUCED IN EACH REGION

REGION NO.	TOP	BOTTOM	REGION KW/FT	FRACTION OF POWER	
1	1	9	4.349	0.0865	(PODDED)
2	9	61	7.862	0.9135	(UNRODDED)

INFERRED POWER FLUX MAP 2-1-47 1- 9-76

	R	P	N	M	L	K	J	H	G	F	E	D	C	B	A
1					0.593	0.679	0.779	0.732	0.700	0.650	0.569				
2			0.517	0.830	0.967	0.960	0.998	1.006	1.000	0.949	0.967	0.852	0.516		
3		0.517	0.993	0.949	1.038	1.133	1.117	1.189	1.120	1.150	1.059	0.942	0.993	0.520	
4		0.859	0.949	1.163	1.082	1.142	1.190	1.129	1.163	1.124	1.071	1.149	0.939	0.854	
5	0.572	0.974	1.067	1.002	1.136	1.165	1.163	1.175	1.137	1.153	1.122	1.065	1.047	0.973	0.594
6	0.662	0.996	1.160	1.145	1.170	1.141	1.129	1.164	1.121	1.140	1.162	1.113	1.131	0.963	0.687
7	0.782	1.009	1.126	1.177	1.164	1.138	1.168	1.193	1.152	1.120	1.159	1.154	1.080	0.994	0.792
8	0.741	1.010	1.191	1.127	1.194	1.183	1.209	1.142	1.167	1.146	1.170	1.117	1.161	0.986	0.720
9	0.803	1.015	1.121	1.183	1.170	1.151	1.186	1.191	1.152	1.119	1.144	1.163	1.117	1.001	0.789
10	0.679	0.961	1.152	1.140	1.170	1.162	1.152	1.175	1.138	1.131	1.144	1.122	1.140	0.953	0.679
11	0.577	0.941	1.011	1.074	1.127	1.183	1.181	1.195	1.169	1.138	1.091	1.068	1.075	0.951	0.583
12		0.820	0.937	1.147	1.081	1.160	1.172	1.106	1.164	1.120	1.060	1.171	0.955	0.834	
13		0.565	0.977	0.931	1.059	1.172	1.103	1.136	1.102	1.164	1.064	0.940	0.981	0.509	
14			0.500	0.832	0.965	0.960	0.991	0.979	1.004	0.986	0.975	0.823	0.501		
15					0.579	0.670	0.769	0.728	0.797	0.703	0.598				

FLUX MAP 2-1-48

DATE	MAR 4, 1976		APPROXIMATE TIME OF MAP 1300 - 1500
POWER	84.0 PERCENT OF FULL POWER		CONTROL BANK D AT 218 STEPS WITHDRAWN
BORON	416 PPM	PRESSURE 2250 PSIA	RCS T-AV 554 DEGREES F

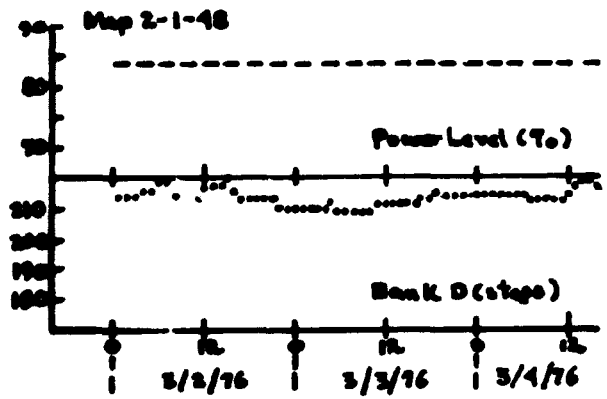

TABLE 3.3.2-16 Summary of Power Distribution Parameters for Flux Map 2-1-48

	R	P	N	M	L	K	J	H	G	F	E	D	C	B	A
1							0.675			0.594					
2						1.063		1.107							
3								1.041		1.094		0.945		0.482	
4		0.705	0.948					1.267							
5					1.207				1.256		1.253		1.176		
6	0.596		1.107			1.261		1.235						1.040	
7				1.111			1.297			1.069			1.195		
8	0.648		1.146		1.119		1.133			1.242		1.276	1.081	1.105	
9		0.896							1.275		1.218				0.662
10					1.096		1.084					1.242			
11	0.520				1.246			1.122			1.233				0.515
12						1.279			1.106			1.122			
13			0.956		1.102			1.077						0.474	
14			0.469				0.873			1.099		0.729			
15					0.520			0.633							

AVERAGE AXIAL CONDITIONS FLUX MAP 2-1-48 3- 4-76
POWER LEVEL EDITED AT 3250.0 MEGAWATTS THERMAL AVERAGE KW/FT = 6.700

POINT	KW/FT	POINT	KW/FT
1	2.629	32	7.247
2	3.077	33	7.257
3	3.973	34	7.259
4	4.801	35	7.238
5	5.412	36	7.207
6	5.470	37	7.154
7	6.459	38	6.907
8	7.093	39	6.277
9	7.461	40	7.053
10	7.730	41	7.264
11	7.906	42	7.360
12	8.000	43	7.426
13	8.031	44	7.470
14	7.998	45	7.482
15	7.913	46	7.463
16	7.670	47	7.405
17	6.829	48	7.298
18	7.496	49	6.884
19	7.691	50	6.361
20	7.705	51	6.974
21	7.687	52	6.974
22	7.639	53	6.818
23	7.582	54	6.570
24	7.506	55	6.216
25	7.414	56	5.736
26	7.299	57	5.131
27	7.034	58	4.388
28	6.296	59	3.476
29	6.986	60	2.545
30	7.171	61	2.593
31	7.216		

FRACTION OF AVERAGE AXIAL POWER PRODUCED IN EACH REGION

REGION NO.	TOP	BOTTOM	REGION KW/FT	FRACTION OF POWER	
1	1	61	6.700	1.0000	(UNRODDED)

FLUX MAP 2-1-51

DATE MAR 23, 1976 APPROXIMATE TIME OF MAP 2200 - 2400

POWER 94.0 PERCENT OF FULL POWER CONTROL BANK D AT 220 STEPS WITHDRAWN

BORON 370 PPM PRESSURE 2249 PSIA RCS T-AV 557 DEGREES F

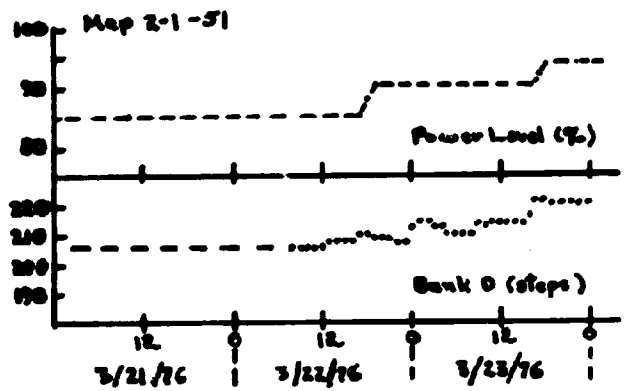

TABLE 3.3.2-17 Summary of Power Distribution Parameters for Flux Map 2-1-51

	R	P	N	M	L	K	J	H	G	F	E	D	C	B	A
1					0.596	0.683	0.784	0.737	0.784	0.683	0.596				
2			0.527	0.849	0.981	0.958	1.006	0.988	1.006	0.958	0.981	0.849	0.527		
3		0.533	1.001	0.979	1.055	1.151	1.084	1.147	1.084	1.151	1.055	0.979	1.001	0.533	
4		0.837	0.980	1.196	1.098	1.121	1.166	1.134	1.166	1.121	1.098	1.196	0.980	0.837	
5	0.592	0.970	1.047	1.094	1.101	1.159	1.128	1.194	1.128	1.159	1.101	1.094	1.047	0.970	0.592
6	0.681	0.940	1.150	1.103	1.151	1.119	1.141	1.130	1.141	1.119	1.151	1.103	1.150	0.940	0.681
7	0.777	1.019	1.082	1.167	1.109	1.132	1.144	1.193	1.144	1.132	1.109	1.167	1.082	1.019	0.777
8	0.749	0.990	1.191	1.145	1.189	1.133	1.207	1.168	1.207	1.133	1.189	1.145	1.191	0.998	0.749
9	0.777	1.019	1.082	1.167	1.109	1.132	1.144	1.193	1.144	1.132	1.109	1.167	1.082	1.019	0.777
10	0.681	0.940	1.150	1.103	1.151	1.119	1.141	1.130	1.141	1.119	1.151	1.103	1.150	0.940	0.681
11	0.592	0.970	1.047	1.094	1.101	1.159	1.128	1.194	1.128	1.159	1.101	1.094	1.047	0.970	0.592
12		0.837	0.980	1.196	1.098	1.121	1.166	1.134	1.166	1.121	1.098	1.196	0.980	0.837	
13		0.533	1.001	0.979	1.055	1.151	1.084	1.147	1.084	1.151	1.055	0.979	1.001	0.553	
14			0.527	0.849	0.981	0.959	1.006	0.988	1.006	0.958	0.981	0.849	0.527		
15					0.596	0.693	0.784	0.737	0.784	0.683	0.596				

TOTAL NORMALIZED REACTION RATE INTEGRALS FLUX MAP 2-1-51 3-23-76

	R	P	O	N	L	K	J	H	G	F	E	D	C	B	A
1							0.690			0.599					
2			0.477			1.089		1.088							
3								1.107		1.084		0.956		0.470	
4		0.737	0.959					1.276							
5					1.299				1.256		1.242		1.179		
6	0.598		1.096			1.267		1.304						1.092	
7				1.117			1.294			1.077			1.192		
8	0.673		1.129		1.103		1.133			1.255		1.243	1.091	1.108	
9		0.884							1.270		1.295				0.679
10					1.138		1.091					1.237			
11	0.508				1.259			1.120			1.241				0.520
12						1.278			1.107			1.173			
13			0.862		1.182			1.077						0.500	
14			0.471				0.883			1.090		0.728			
15					0.505			0.642							

AVERAGE AXIAL CONDITIONS FLUX MAP 2-1-51 3-23-76
POWER LEVEL EDITED AT 3250.0 MEGAWATTS THERMAL AVERAGE KW/FT = 6.700

POINT	KW/FT	POINT	KW/FT
1	2.541	32	7.120
2	3.014	33	7.150
3	3.926	34	7.161
4	4.768	35	7.164
5	5.413	36	7.149
6	5.474	37	7.115
7	6.209	38	6.952
8	6.994	39	6.211
9	7.357	40	6.994
10	7.610	41	7.276
11	7.707	42	7.395
12	7.873	43	7.486
13	7.894	44	7.548
14	7.857	45	7.587
15	7.765	46	7.596
16	7.576	47	7.568
17	6.722	48	7.484
18	7.226	49	7.175
19	7.489	50	6.465
20	7.505	51	7.194
21	7.490	52	7.258
22	7.444	53	7.139
23	7.392	54	6.916
24	7.323	55	6.578
25	7.242	56	6.117
26	7.145	57	5.521
27	6.949	58	4.768
28	6.155	59	3.839
29	6.782	60	2.762
30	7.025	61	2.951
31	7.078		

FRACTION OF AVERAGE AXIAL POWER PRODUCED IN EACH REGION

REGION NO.	TOP	BOTTOM	REGION KW/FT	FRACTION OF POWER	
1	1	61	6.700	1.0000	(UNRODDED)

	R	P	S	N	L	K	J	H	G	F	E	D	C	B	A
1					0.597	0.693	0.789	0.734	0.775	0.675	0.582				
2			0.530	0.861	0.981	0.959	1.015	0.978	1.006	0.940	0.971	0.853	0.523		
3		0.525	1.002	0.987	1.052	1.145	1.093	1.175	1.088	1.131	1.049	0.981	0.996	0.522	
4		0.846	0.903	1.218	1.126	1.135	1.185	1.139	1.163	1.094	1.092	1.192	0.971	0.844	
5	0.588	0.977	1.055	1.118	1.140	1.174	1.144	1.185	1.114	1.142	1.093	1.085	1.041	0.977	0.599
6	0.674	0.945	1.143	1.119	1.173	1.121	1.143	1.161	1.137	1.111	1.149	1.089	1.129	0.957	0.964
7	0.800	1.027	1.093	1.165	1.126	1.136	1.143	1.206	1.142	1.127	1.121	1.146	1.060	1.008	0.795
8	0.771	1.004	1.105	1.133	1.174	1.142	1.204	1.154	1.173	1.126	1.171	1.114	1.157	0.985	0.734
9	0.807	1.012	1.094	1.179	1.137	1.145	1.150	1.105	1.119	1.129	1.133	1.156	1.080	1.013	0.780
10	0.675	0.940	1.136	1.117	1.181	1.134	1.143	1.138	1.131	1.117	1.154	1.092	1.117	0.947	0.684
11	0.577	0.948	1.016	1.102	1.113	1.171	1.139	1.189	1.134	1.140	1.099	1.099	1.055	0.970	0.591
12		0.835	0.980	1.195	1.099	1.115	1.166	1.121	1.155	1.097	1.108	1.231	1.017	0.877	
13		0.524	0.997	0.974	1.043	1.138	1.075	1.147	1.075	1.141	1.059	0.983	1.025	0.555	
14			0.523	0.848	0.957	0.940	1.002	0.975	1.012	0.959	0.976	0.837	0.531		
15					0.574	0.673	0.787	0.739	0.793	0.693	0.594				

FLUX MAP 2-1-53

DATE	JUN 16, 1975		APPROXIMATE TIME OF MAP 1200 - 1400
POWER	94.0 PERCENT OF FULL POWER		CONTROL BANK D AT 212 STEPS WITHDRAWN
BORON	308 PPM	PRESSURE 2257 PSIA	RCS T-AV 555 DEGREES F

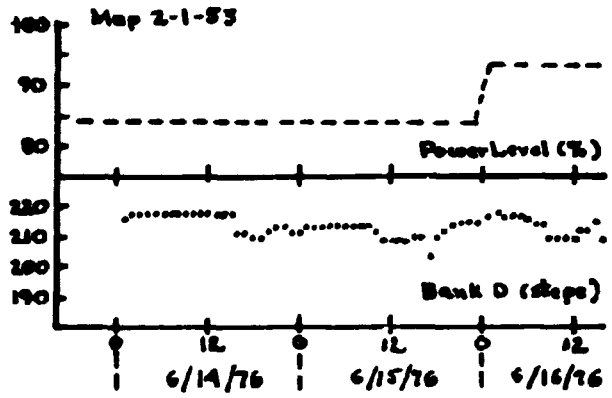

TABLE 3.3.2-18 Summary of Power Distributio. Parameters for Flux Map 2-1-53

TOTAL NORMALIZED REACTION RATE INTEGRALS FLUX MAP 2-1-53 6-16-76

	R	P	N	M	L	K	J	H	G	F	E	D	C	B	A
1							0.707			0.606					
2			0.483			1.087		1.102							
3								1.095		1.093		0.962		0.478	
4		0.730	0.967					1.233							
5					1.282				1.255		1.254		1.196		
6	0.605		1.397			1.264		1.278						1.096	
7				1.111			1.276			1.084			1.204		
8	0.604		1.114		1.097		1.130			1.258		1.220	1.105	1.108	
9		0.891							1.255		1.264				0.688
10					1.126		1.089					1.232			
11	0.508				1.266			1.116			1.249				0.520
12						1.248			1.100			1.160			
13			0.870		1.193			1.081						0.515	
14			0.481				0.897			1.090		0.730			
15					0.512			0.649							

AVERAGE AXIAL CONDITIONS — FLUX MAP 2-1-53 — 6-16-76

POWER LEVEL EDITED AT 3250.0 MEGAWATTS THERMAL — AVERAGE KW/FT = 6.700

POINT	KW/FT	POINT	KW/FT
1	2.397	32	7.172
2	2.827	33	7.199
3	3.667	34	7.216
4	4.463	35	7.213
5	5.106	36	7.206
6	5.184	37	7.167
7	6.084	38	6.933
8	6.753	39	6.329
9	7.118	40	7.090
10	7.390	41	7.355
11	7.574	42	7.474
12	7.679	43	7.570
13	7.714	44	7.638
14	7.699	45	7.689
15	7.621	46	7.704
16	7.417	47	7.687
17	6.604	48	7.613
18	7.182	49	7.223
19	7.426	50	6.726
20	7.454	51	7.402
21	7.447	52	7.475
22	7.416	53	7.371
23	7.374	54	7.153
24	7.316	55	6.813
25	7.241	56	6.337
26	7.143	57	5.712
27	6.895	58	4.922
28	6.209	59	3.934
29	6.855	60	2.910
30	7.081	61	2.979
31	7.140		

FRACTION OF AVERAGE AXIAL POWER PRODUCED IN EACH REGION

REGION NO.	TOP	BOTTOM	REGION KW/FT	FRACTION OF POWER	
1	1	61	6.700	1.0000	(UNRODDED)

	R	P	N	M	L	K	J	H	G	F	E	D	C	B	A
1					0.604	0.713	0.809	0.759	0.785	0.688	0.591				
2			0.541	0.861	0.990	0.955	1.040	0.986	1.030	0.944	0.900	0.845	0.533		
3		4.536	1.002	1.034	1.046	1.135	1.071	1.161	1.071	1.140	1.042	0.992	0.995	0.535	
4		0.850	0.997	1.281	1.135	1.105	1.162	1.096	1.154	1.089	1.114	1.191	1.000	0.854	
5	0.594	0.982	1.044	1.128	1.118	1.169	1.113	1.171	1.099	1.154	1.096	1.117	1.040	0.995	0.610
6	0.606	0.945	1.144	1.181	1.109	1.106	1.147	1.132	1.145	1.101	1.156	1.086	1.136	0.959	0.710
7	0.800	1.040	1.070	1.159	1.106	1.144	1.119	1.194	1.122	1.137	1.103	1.151	1.058	1.036	0.802
8	0.700	1.001	1.176	1.100	1.160	1.122	1.200	1.127	1.172	1.115	1.162	1.088	1.164	0.986	0.750
9	0.813	1.024	1.073	1.169	1.109	1.149	1.127	1.176	1.099	1.136	1.102	1.149	1.070	1.039	0.792
10	0.603	0.931	1.121	1.097	1.171	1.111	1.142	1.115	1.138	1.097	1.152	1.077	1.118	0.944	0.697
11	0.581	0.952	1.006	1.125	1.107	1.165	1.112	1.183	1.113	1.152	1.094	1.116	1.045	0.973	0.594
12		0.840	1.005	1.200	1.120	1.089	1.158	1.100	1.148	1.084	1.122	1.214	1.042	0.888	
13		0.539	1.005	1.005	1.045	1.132	1.060	1.147	1.062	1.135	1.045	1.002	1.035	0.577	
14			0.539	0.851	0.974	0.942	1.022	0.976	1.032	0.956	0.982	0.840	0.547		
15					0.505	0.688	0.794	0.752	0.798	0.705	0.600				

FLUX MAP 2-1-60

DATE JUL 19, 1976 APPROXIMATE TIME OF MAP 1300 - 1500

POWER 98.0 PERCENT OF FULL POWER CONTROL BANK D AT 214 STEPS WITHDRAWN

BORON 224 PPM PRESSURE 2255 PSIA RCS T-AV 557 DEGREES F

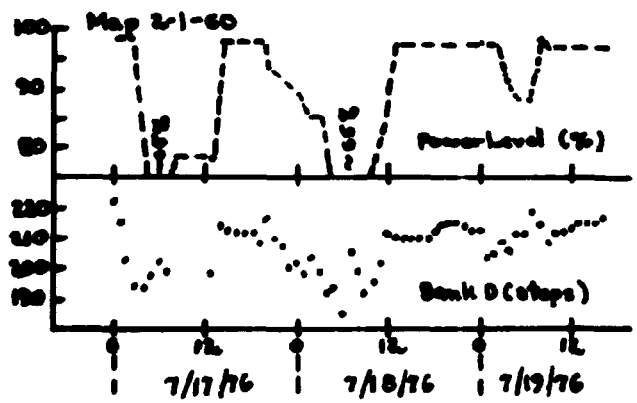

TABLE 3.3.2-19 Summary of Power Distribution Parameters for Flux Map 2-1-60

TOTAL NORMALIZED REACTION RATE INTEGRALS FLUX MAP 2-1-60 7-19-76

	T	P	O	N	L	K	J	H	G	F	E	D	C	B	A
1							0.712			0.615					
2			0.497			1.093		1.127							
3								1.083		1.085		0.981		0.493	
4		0.745	0.989					1.239							
5					1.261				1.239		1.242		1.195		
6	0.519					1.262		1.252						1.096	
7				1.101			1.203			1.080			1.197		
8	0.697		1.115		1.090		1.117			1.238		1.244	1.091	1.125	
9		0.907							1.246		1.245				0.701
10					1.115		1.085					1.235			
11	0.523				1.240			1.098			1.251				0.530
12						1.239			1.104			1.158			
13			0.806		1.201			1.085						0.525	
14			0.494				0.901			1.102		0.742			
15					0.523			0.654							

AVERAGE AXIAL CONDITIONS — FLUX MAP 2-1-60 — 7-19-76

POWER LEVEL EDITED AT 3250.0 MEGAWATTS THERMAL — AVERAGE KW/FT = 6.700

POINT	KW/FT	POINT	KW/FT
1	2.885	32	6.911
2	2.964	33	6.965
3	3.013	34	7.016
4	4.607	35	7.051
5	5.189	36	7.075
6	5.160	37	7.073
7	6.107	38	6.895
8	6.671	39	6.239
9	6.979	40	7.136
10	7.189	41	7.432
11	7.321	42	7.600
12	7.372	43	7.742
13	7.368	44	7.860
14	7.312	45	7.959
15	7.206	46	8.027
16	6.976	47	8.063
17	6.125	48	8.047
18	6.773	49	7.717
19	6.954	50	7.899
20	6.974	51	7.996
21	6.964	52	8.124
22	6.937	53	8.065
23	6.905	54	7.880
24	6.861	55	7.552
25	6.804	56	7.066
26	6.733	57	6.402
27	6.525	58	5.542
28	5.815	59	4.457
29	6.539	60	3.227
30	6.759	61	3.475
31	6.842		

FRACTION OF AVERAGE AXIAL POWER PRODUCED IN EACH REGION

REGION NO.	TOP	BOTTOM	REGION KW/FT	FRACTION OF POWER	
1	1	61	6.700	1.0000	(UNRODDED)

INFERRED FDHN FLUX MAP 2-1-60 7-19-76

	R	P	N	M	L	K	J	H	G	F	E	D	C	B	A
1					0.606	0.715	0.814	0.768	0.797	0.696	0.598				
2			0.554	0.883	0.993	0.958	1.045	0.999	1.034	0.945	0.986	0.860	0.545		
3		0.544	1.020	1.026	1.049	1.138	1.072	1.152	1.060	1.128	1.045	1.009	1.018	0.550	
4		0.857	1.015	1.206	1.114	1.084	1.157	1.094	1.144	1.075	1.110	1.194	1.011	0.867	
5	0.603	0.991	1.053	1.122	1.090	1.155	1.103	1.156	1.083	1.138	1.082	1.107	1.044	0.992	0.608
6	0.701	0.949	1.130	1.085	1.156	1.100	1.137	1.109	1.126	1.089	1.144	1.076	1.130	0.956	0.708
7	0.823	1.065	1.076	1.147	1.096	1.138	1.117	1.181	1.106	1.127	1.099	1.150	1.052	1.033	0.806
8	0.801	1.011	1.175	1.100	1.156	1.112	1.185	1.117	1.158	1.097	1.154	1.096	1.154	0.994	0.761
9	0.826	1.038	1.080	1.160	1.097	1.136	1.115	1.164	1.087	1.118	1.086	1.145	1.071	1.046	0.804
10	0.698	0.949	1.137	1.081	1.155	1.098	1.134	1.102	1.122	1.086	1.145	1.075	1.118	0.959	0.708
11	0.597	0.977	1.032	1.107	1.089	1.151	1.099	1.164	1.102	1.151	1.092	1.113	1.043	0.989	0.604
12		0.850	1.021	1.201	1.111	1.079	1.147	1.093	1.147	1.084	1.118	1.208	1.045	0.902	
13		0.549	1.022	1.018	1.047	1.130	1.058	1.148	1.064	1.141	1.051	1.006	1.044	0.586	
14			0.551	0.865	0.984	0.948	1.024	0.978	1.037	0.964	0.993	0.852	0.555		
15					0.596	0.696	0.797	0.755	0.803	0.711	0.606				

FLUX MAP 2-1-61

DATE AUG 19, 1976 APPROXIMATE TIME OF MAP 1400 - 1500

POWER 95.5 PERCENT OF FULL POWER CONTROL BANK D AT 220 STEPS WITHDRAWN

BORON 169 PPM PRESSURE 2250 PSIA RCS T-AV 557 DEGREES F

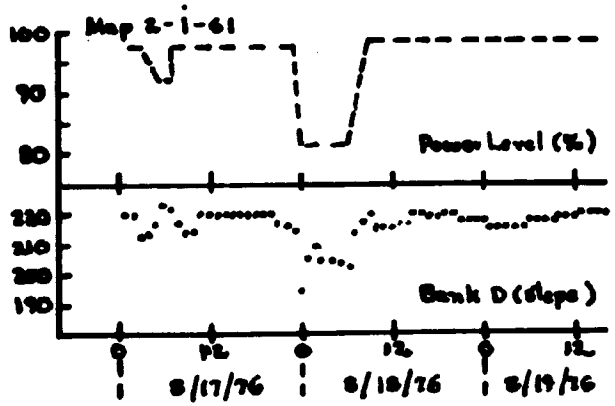

TABLE 3.3.2-20 Summary of Power Distribution Parameters for Flux Map 2-1-61

TOTAL NORMALIZED REACTION RATE INTEGRALS FLUX MAP 2-1-61 8-19-76

	R	P	N	M	L	K	J	H	G	F	E	D	C	B	A
1										0.616					
2			0.498			1.094		1.115							
3								1.081				0.978		0.479	
4			0.987					1.230							
5					1.258				1.213						
6	0.623		1.062			1.242		1.241						1.095	
7				1.087			1.248			1.067			1.176		
8			1.082				1.098			1.212		1.225	1.075	1.121	
9		0.884									1.234				0.680
10					1.104		1.066					1.219			
11	0.519				1.229						1.224				0.527
12						1.218			1.086			1.177			
13			0.881		1.189			1.074							
14			0.494							1.078		0.738			
15					0.504			0.656							

AVERAGE AXIAL CONDITIONS FLUX MAP 2-1-61 8-19-76
POWER LEVEL EDITED AT 3250.0 MEGAWATTS THERMAL AVERAGE KW/FT = 6.700

POINT	KW/FT	POINT	KW/FT
1	2.949	32	6.848
2	3.395	33	6.868
3	4.377	34	6.878
4	5.227	35	6.881
5	5.824	36	6.863
6	5.746	37	6.829
7	6.754	38	6.579
8	7.351	39	6.006
9	7.657	40	6.802
10	7.850	41	7.043
11	7.953	42	7.173
12	7.970	43	7.268
13	7.938	44	7.355
14	7.846	45	7.421
15	7.702	46	7.473
16	7.417	47	7.492
17	6.497	48	7.459
18	7.159	49	7.041
19	7.314	50	6.719
20	7.297	51	7.466
21	7.263	52	7.576
22	7.208	53	7.518
23	7.143	54	7.344
24	7.061	55	7.028
25	6.974	56	6.557
26	6.866	57	5.921
27	6.592	58	5.094
28	5.884	59	4.040
29	6.585	60	2.990
30	6.765	61	3.121
31	6.815		

FRACTION OF AVERAGE AXIAL POWER PRODUCED IN EACH REGION

REGION NO.	TOP	BOTTOM	REGION KW/FT	FRACTION OF POWER	
1	1	61	6.700	1.0000	(UNRODDED)

INFERRED FDNN FLUX MAP 2-1-61 8-19-76

	R	P	N	M	L	K	J	H	G	F	E	D	C	B	A
1					0.614	0.715	0.811	0.769	0.804	0.706	0.606				
2			0.563	0.896	1.006	0.968	1.049	1.001	1.046	0.956	0.998	0.868	0.543		
3		0.556	1.039	1.039	1.063	1.153	1.080	1.161	1.081	1.157	1.059	1.018	1.014	0.541	
4		0.875	1.027	1.218	1.125	1.095	1.165	1.099	1.145	1.058	1.135	1.216	1.014	0.862	
5	0.613	0.997	1.049	1.124	1.107	1.159	1.104	1.155	1.075	1.127	1.071	1.135	1.064	1.007	0.615
6	0.713	0.952	1.110	1.083	1.158	1.096	1.131	1.109	1.123	1.087	1.153	1.067	1.132	0.965	0.715
7	0.802	1.030	1.050	1.142	1.093	1.129	1.103	1.173	1.103	1.125	1.095	1.145	1.049	1.036	0.814
8	0.736	0.975	1.156	1.096	1.153	1.107	1.177	1.117	1.157	1.090	1.151	1.093	1.152	0.997	0.757
9	0.783	1.016	1.063	1.158	1.098	1.134	1.109	1.171	1.092	1.118	1.087	1.144	1.070	1.041	0.791
10	0.693	0.940	1.123	1.081	1.156	1.095	1.126	1.097	1.126	1.094	1.140	1.075	1.116	0.953	0.703
11	0.594	0.973	1.020	1.106	1.086	1.147	1.088	1.151	1.094	1.154	1.100	1.126	.	0.995	0.607
12		0.859	1.027	1.203	1.109	1.074	1.141	1.092	1.142	1.083	1.137	1.240	1.042	0.861	
13		0.554	1.030	1.024	1.040	1.128	1.059	1.151	1.061	1.132	1.059	1.023	1.023	0.558	
14			0.557	0.865	0.973	0.936	1.047	0.992	1.037	0.953	0.990	0.857	0.538		
15					0.581	0.676	0.817	0.768	0.807	0.704	0.605				

FLUX MAP 2-1-62

DATE NOV 4, 1975 APPROXIMATE TIME OF MAP 1400 - 1500

POWER 92.0 PERCENT OF FULL POWER CONTROL BANK D AT 212 STEPS WITHDRAWN

BORON 107 PPM PRESSURE 2252 PSIA RCS T-AV 557 DEGREES F

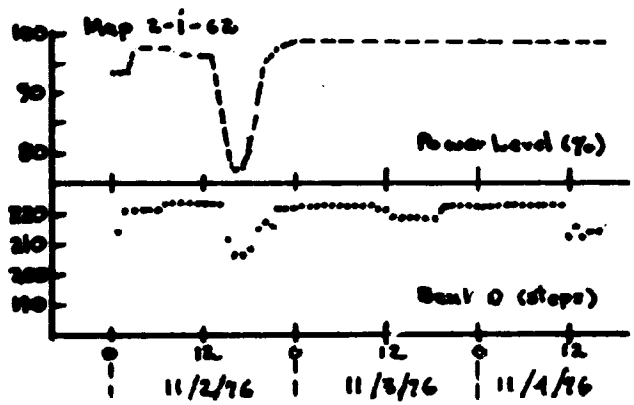

TABLE 3.3.2-21 Summary of Power Distribution Parameters for Flux Map 2-1-62

TOTAL NORMALIZED REACTION RATE INTEGRALS FLUX MAP 2-1-62 11- 4-76

	R	P	M	N	L	K	J	H	G	F	E	D	C	B	A
1							0.738			0.667					
2			0.536			1.122		1.137							
3								1.086		1.135		1.013		0.511	
4			1.020												
5					1.263				1.223		1.285		1.215		
6	0.660		1.116			1.314		1.243						1.123	
7							1.240			1.119					
8	0.689		1.115		1.103							1.224		1.147	
9		0.933							1.235		1.231				0.721
10					1.110		1.002					1.289			
11	0.524				1.245			1.104			1.287				0.578
12									1.098			1.181			
13					1.219			1.115						0.535	
14			0.534				0.935					0.760			
15					0.540			0.676							

AVERAGE AXIAL CONDITIONS FLUX MAP 2-1-62 11- 4-76
PDQ DECK USED = HPP15K
POWER LEVEL EDITED AT 3250.0 MEGAWATTS THERMAL AVERAGE KW/FT = 6.700

POINT	KW/FT	POINT	KW/FT
1	2.099	32	6.909
2	3.281	33	6.932
3	4.148	34	6.945
4	4.978	35	6.950
5	5.560	36	6.935
6	5.562	37	6.893
7	6.516	38	6.619
8	7.104	39	6.071
9	7.407	40	6.861
10	7.595	41	7.097
11	7.709	42	7.222
12	7.741	43	7.326
13	7.713	44	7.420
14	7.637	45	7.490
15	7.522	46	7.545
16	7.221	47	7.572
17	6.419	48	7.553
18	7.034	49	7.142
19	7.217	50	6.807
20	7.223	51	7.593
21	7.202	52	7.736
22	7.159	53	7.710
23	7.109	54	7.565
24	7.047	55	7.277
25	6.978	56	6.828
26	6.880	57	6.195
27	6.597	58	5.354
28	5.948	59	4.299
29	6.626	60	3.197
30	6.819	61	3.356
31	6.875		

FRACTION OF AVERAGE AXIAL POWER PRODUCED IN EACH REGION

REGION NO.	TOP	BOTTOM	REGION KW/FT	FRACTION OF POWER	
1	1	61	6.700	1.0000	(UNRODDED)

INFERRED FDWH FLUX MAP 2-1-62 11- 4-76
FDQ DECK USED = HFP15K

	R	P	N	M	L	K	J	H	G	F	E	D	C	B	A
1					0.622	0.730	0.829	0.784	0.826	0.746	0.638				
2			0.594	0.923	1.011	0.963	1.061	0.989	1.065	0.984	1.022	0.865	0.561		
3		0.577	1.053	1.064	1.040	1.131	1.049	1.132	1.057	1.157	1.053	1.026	1.024	0.567	
4		0.872	1.034	1.193	1.114	1.056	1.133	1.048	1.122	1.073	1.135	1.195	1.032	0.876	
5	0.640	1.020	1.048	1.123	1.077	1.158	1.090	1.119	1.040	1.129	1.090	1.125	1.037	1.005	0.623
6	0.748	0.977	1.130	1.069	1.158	1.105	1.128	1.070	1.114	1.079	1.150	1.067	1.125	0.960	0.728
7	0.832	1.072	1.362	1.147	1.092	1.132	1.066	1.137	1.092	1.147	1.084	1.126	1.051	1.061	0.819
8	0.786	0.991	1.156	1.080	1.148	1.074	1.127	1.054	1.137	1.069	1.131	1.053	1.138	0.996	0.779
9	0.817	1.047	1.055	1.142	1.072	1.118	1.065	1.122	1.048	1.092	1.050	1.127	1.058	1.063	0.815
10	0.704	0.937	1.122	1.055	1.135	1.062	1.111	1.067	1.108	1.060	1.146	1.087	1.154	0.985	0.747
11	0.591	0.961	0.996	1.108	1.060	1.126	1.070	1.144	1.070	1.144	1.094	1.140	1.059	1.058	0.651
12		0.834	1.093	1.183	1.110	1.052	1.153	1.069	1.123	1.065	1.133	1.206	1.062	0.921	
13		0.592	1.081	1.056	1.040	1.123	1.056	1.152	1.053	1.117	1.037	1.030	1.046	0.593	
14			0.592	0.889	0.996	0.950	1.047	0.986	1.068	0.940	0.990	0.859	0.568		
15					0.609	0.717	0.810	0.773	0.816	0.734	0.609				

AVERAGE AXIAL CONDITIONS FLUX MAP 2-1-62 11- 4-76
"DQ DECK USED = NFP16K
'OWER LEVEL EDITED AT 3250.0 MEGAWATTS THERMAL AVERAGE KW/FT = 6.700

POINT	KW/FT	POINT	KW/FT
1	2.899	32	6.909
2	3.281	33	6.932
3	4.148	34	6.945
4	4.978	35	6.950
5	5.560	36	6.935
6	5.562	37	6.893
7	6.516	38	6.619
8	7.104	39	6.071
9	7.407	40	6.861
10	7.595	41	7.097
11	7.709	42	7.222
12	7.741	43	7.326
13	7.713	44	7.420
14	7.637	45	7.490
15	7.522	46	7.545
16	7.221	47	7.572
17	6.419	48	7.553
18	7.034	49	7.142
19	7.217	50	6.807
20	7.223	51	7.593
21	7.202	52	7.736
22	7.159	53	7.710
23	7.109	54	7.565
24	7.047	55	7.277
25	6.978	56	6.828
26	6.880	57	6.195
27	6.597	58	5.354
28	5.948	59	4.299
29	6.626	60	3.197
30	6.819	61	3.356
31	6.875		

'RACTION OF AVERAGE AXIAL POWER PRODUCED IN EACH REGION

REGION NO.	TOP	BOTTOM	REGION KW/FT	FRACTION OF POWER	
1	1	61	6.700	1.0000	(UNRODDED)

	R	P	N	M	L	K	J	H	G	F	E	D	C	B	A
1					0.617	0.746	0.820	0.796	0.817	0.750	0.627				
2				0.595	0.911	1.026	0.967	1.082	0.994	1.083	0.978	1.023	0.841	0.559	
3			0.574	1.034	1.069	1.052	1.134	1.040	1.127	1.052	1.148	1.039	1.022	1.006	0.568
4			0.847	1.038	1.151	1.136	1.064	1.127	1.045	1.122	1.073	1.141	1.157	1.045	0.868
5		0.628	1.021	1.033	1.129	1.085	1.169	1.099	1.132	1.048	1.141	1.099	1.144	1.043	1.022	0.617
6		0.752	0.971	1.129	1.065	1.169	1.113	1.140	1.081	1.127	1.075	1.159	1.071	1.130	0.965	0.739
7		0.820	1.087	1.054	1.140	1.090	1.146	1.074	1.148	1.084	1.137	1.077	1.143	1.057	1.086	0.815
8		0.793	0.988	1.149	1.071	1.142	1.072	1.137	1.059	1.136	1.065	1.136	1.064	1.148	1.003	0.788
9		0.804	1.055	1.044	1.135	1.062	1.114	1.044	1.120	1.055	1.110	1.058	1.140	1.067	1.084	0.805
10		0.709	0.932	1.107	1.052	1.120	1.052	1.102	1.059	1.120	1.063	1.157	1.096	1.167	0.985	0.754
11		0.586	0.974	0.998	1.122	1.066	1.124	1.057	1.137	1.059	1.145	1.098	1.149	1.053	1.073	0.645
12			0.829	1.106	1.160	1.129	1.057	1.148	1.059	1.114	1.062	1.135	1.147	1.062	0.912
13			0.594	1.069	1.076	1.047	1.121	1.046	1.145	1.046	1.111	1.022	1.031	1.029	0.595
14				0.594	0.882	1.013	0.948	1.055	0.982	1.086	0.937	0.996	0.847	0.570	
15					0.603	0.722	0.797	0.780	0.807	0.740	0.599				

FLUX MAP 2-1-63

DATE DEC 7, 1976 APPROXIMATE TIME OF MAP 1400 - 1500

POWER 96.5 PERCENT OF FULL POWER CONTROL BANK D AT 219 STEPS WITHDRAWN

BORON 7 PPM PRESSURE 2256 PSIA RCS T-AV 557 DEGREES F

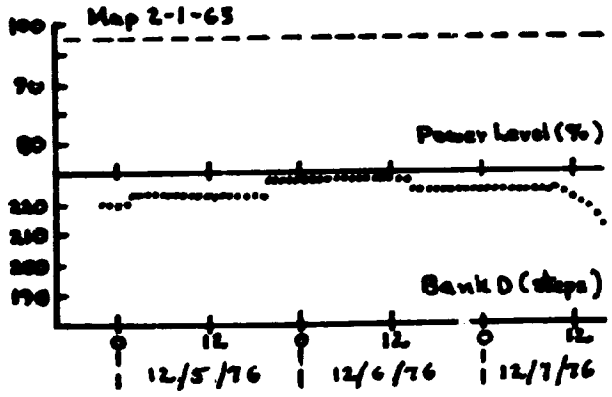

TABLE 3.3.2-22 Summary of Power Distribution Parameters for Flux Map 2-1-63

TOTAL NORMALIZED REACTION RATE INTEGRALS FLUX MAP 2-1-63 12- 7-76

	R	P	M	H	L	K	J	N	G	F	E	D	C	B	A
1										0.661					
2			0.530			1.143		1.178							
3								1.104				1.043		0.531	
4			1.056												
5					1.274				1.239						
6	0.671		1.147			1.258		1.237						1.145	
7							1.263			1.087					
8			1.149									1.250		1.181	
9		0.967													0.748
10					1.109		1.083					1.247			
11	0.553				1.269						1.258				0.570
12									1.123						
13					1.245			1.096							
14			0.536									0.791			
15					0.554			0.696							

AVERAGE AXIAL CONDITIONS FLUX MAP 2-1-63 12- 7-76
POWER LEVEL EDITED AT 3250.0 MEGAWATTS THERMAL AVERAGE KW/FT = 6.700

POINT	KW/FT	POINT	KW/FT
1	3.296	32	6.790
2	3.677	33	6.807
3	4.650	34	6.810
4	5.490	35	6.798
5	6.064	36	6.773
6	5.943	37	6.729
7	6.940	38	6.481
8	7.497	39	5.846
9	7.760	40	6.628
10	7.912	41	6.877
11	7.967	42	6.991
12	7.952	43	7.084
13	7.889	44	7.169
14	7.770	45	7.232
15	7.619	46	7.284
16	7.299	47	7.326
17	6.415	48	7.322
18	7.032	49	7.080
19	7.211	50	6.512
20	7.207	51	7.392
21	7.170	52	7.587
22	7.124	53	7.595
23	7.066	54	7.497
24	6.999	55	7.254
25	6.916	56	6.846
26	6.899	57	6.244
27	6.543	58	5.441
28	5.827	59	4.380
29	6.516	60	3.214
30	6.715	61	3.357
31	6.760		

FRACTION OF AVERAGE AXIAL POWER PRODUCED IN EACH REGION

REGION NO.	TOP	BOTTOM	REGION KW/FT	FRACTION OF POWER	
1	1	61	6.700	1.0000	(UNRODDED)

	R	P	N	M	L	K	J	H	G	F	E	D	C	B	A
1					0.629	0.755	0.832	0.824	0.824	0.740	0.617				
2			0.596	0.901	1.038	0.973	1.100	1.010	1.094	0.954	1.014	0.861	0.579		
3		0.586	1.040	1.076	1.054	1.131	1.056	1.144	1.063	1.139	1.025	1.046	1.028	0.588	
4		0.871	1.058	1.165	1.140	1.062	1.126	1.044	1.118	1.055	1.109	1.142	1.063	0.890	
5	0.626	1.036	1.053	1.139	1.079	1.135	1.062	1.124	1.056	1.126	1.070	1.109	1.056	1.040	0.630
6	0.751	0.977	1.146	1.069	1.135	1.065	1.123	1.061	1.109	1.047	1.113	1.064	1.133	0.975	0.756
7	0.814	1.105	1.073	1.152	1.056	1.120	1.065	1.138	1.053	1.092	1.060	1.155	1.066	1.106	0.834
8	0.709	1.008	1.146	1.094	1.093	1.066	1.136	1.063	1.103	1.035	1.128	1.078	1.160	1.013	0.815
9	0.811	1.103	1.062	1.132	1.028	1.087	1.032	1.099	1.032	1.092	1.066	1.132	1.063	1.111	0.837
10	0.743	0.958	1.121	1.047	1.117	1.043	1.088	1.031	1.088	1.047	1.122	1.051	1.122	0.982	0.762
11	0.615	1.014	1.330	1.125	1.064	1.115	1.030	1.108	1.054	1.126	1.066	1.129	1.046	1.045	0.633
12		0.865	1.091	1.174	1.140	1.061	1.118	1.044	1.118	1.056	1.126	1.160	1.067	0.891	
13		0.594	1.054	1.084	1.057	1.134	1.041	1.121	1.042	1.132	1.042	1.063	1.027	0.587	
14			0.594	0.884	1.027	0.964	1.088	0.991	1.088	0.962	1.026	0.875	0.578		
15					0.615	0.738	0.823	0.801	0.823	0.760	0.622				

FLUX MAP 2-1-65

DATE JAN 4, 1977 APPROXIMATE TIME OF MAP 0900 - 1200

POWER 72.5 PERCENT OF FULL POWER CONTROL BANK D AT 219 STEPS WITHDRAWN

BORON 8 PPM PRESSURE 2258 PSIA RCS T-AV 553 DEGREES F

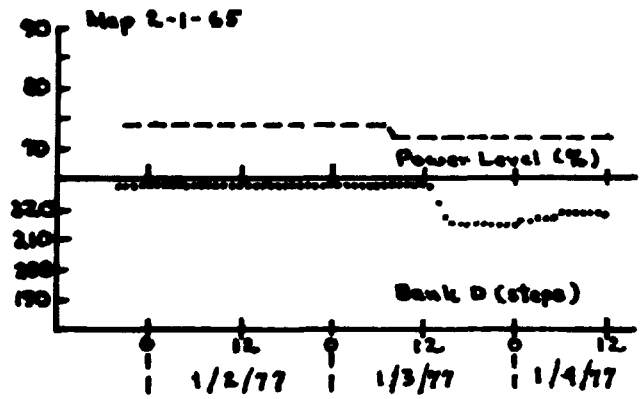

TABLE 3.3.2-23 Summary of Power Distribution Parameters for Flux Map 2-1-65

TOTAL NORMALIZED REACTION RATE INTEGRALS FLUX MAP 2-1-65 1- 4-77

	R	P	N	M	L	K	J	H	G	F	E	D	C	B	A
1										0.656					
2			0.536			1.137		1.161							
3										1.097		0.533			
4		0.799						1.221							
5					1.222						1.223		1.201		
6	0.861					1.212								1.135	
7				1.079											
8	0.692		1.123		1.059		1.077			1.202		1.204	1.090		
9		0.956							1.182		1.140				0.743
10					1.089		1.054					1.210			
11								1.059			1.224				0.562
12						1.238			1.095			1.197			
13								1.072							
14			0.534				0.922			1.146					
15					0.550			0.706							

AVERAGE AXIAL CONDITIONS FLUX MAP 2-1-65 1- 4-77
PDQ DECK USED = HPP17K
POWER LEVEL EDITED AT 3250.0 MEGAWATTS THERMAL AVERAGE KW/FT = 6.700

POINT	KW/FT	POINT	KW/FT
1	3.492	32	6.567
2	4.063	33	6.563
3	5.207	34	6.549
4	6.180	35	6.526
5	6.815	36	6.492
6	6.649	37	6.445
7	7.600	38	6.263
8	8.213	39	5.572
9	8.448	40	6.239
10	8.545	41	6.529
11	8.562	42	6.637
12	8.497	43	6.720
13	8.375	44	6.785
14	8.214	45	6.846
15	8.006	46	6.896
16	7.671	47	6.920
17	6.677	48	6.922
18	7.191	49	6.714
19	7.302	50	6.078
20	7.338	51	6.882
21	7.264	52	7.141
22	7.177	53	7.182
23	7.086	54	7.116
24	6.994	55	6.922
25	6.890	56	6.583
26	6.767	57	6.064
27	6.534	58	5.350
28	5.740	59	4.402
29	6.316	60	3.217
30	6.541	61	3.239
31	6.567		

FRACTION OF AVERAGE AXIAL POWER PRODUCED IN EACH REGION

REGION NO.	TOP	BOTTOM	REGION KW/FT	FRACTION OF POWER	
1	1	61	6.700	1.0000	(UNROLDED)

INFERRED FDHN
PDQ DECK USED = HFP17K

FLUX MAP 2-1-65

1- 4-77

	R	P	N	M	L	K	J	H	G	F	E	D	C	B	A
1					0.630	0.766	0.840	0.827	0.830	0.749	0.624				
2			0.806	0.916	1.053	0.987	1.114	1.027	1.093	0.964	1.028	0.878	0.602		
3		0.601	1.067	1.113	1.069	1.147	1.069	1.159	1.060	1.118	1.042	1.063	1.068	0.602	
4		0.901	1.095	1.148	1.114	1.038	1.149	1.073	1.128	1.044	1.121	1.153	1.002	0.892	
5	0.634	1.047	1.073	1.114	1.057	1.112	1.060	1.150	1.082	1.108	1.054	1.120	1.051	1.037	0.637
6	0.754	0.972	1.188	1.039	1.111	1.048	1.096	1.038	1.088	1.037	1.108	1.043	1.130	0.973	0.764
7	0.825	1.107	1.054	1.128	1.036	1.102	1.048	1.124	1.059	1.117	1.062	1.133	1.055	1.098	0.828
8	0.804	1.009	1.132	1.048	1.101	1.047	1.124	1.034	1.106	1.022	1.100	1.032	1.136	1.006	0.814
9	0.826	1.106	1.064	1.121	1.034	1.094	1.040	1.099	1.037	1.075	1.032	1.101	1.045	1.104	0.836
10	0.755	0.973	1.138	1.037	1.107	1.032	1.087	1.027	1.085	1.016	1.092	1.025	1.[illegible]10	0.990	0.768
11	0.629	1.038	1.030	1.114	1.067	1.115	1.039	1.101	1.043	1.118	1.060	1.122	1.040	1.050	0.636
12		0.913	1.108	1.179	1.145	1.066	1.113	1.036	1.110	1.048	1.124	1.158	1.066	0.895	
13		0.603	1.071	1.108	1.058	1.113	1.028	1.105	1.045	1.141	1.061	1.066	1.031	0.581	
14			0.603	0.895	1.028	0.950	1.082	0.988	1.106	0.995	1.061	0.878	0.581		
15					0.623	0.738	0.819	0.800	0.843	0.772	0.[illegible]				

AVERAGE AXIAL CONDITIONS FLUX MAP 2-1-65 1- 4-77
PDQ DECK USED = HFP17.9K
POWER LEVEL EDITED AT 3250.0 MEGAWATTS THERMAL AVERAGE KW/FT = 6.700

POINT	KW/FT	POINT	KW/FT
1	3.491	32	6.567
2	4.063	33	6.563
3	5.207	34	6.549
4	6.180	35	6.526
5	6.815	36	6.492
6	6.649	37	6.445
7	7.600	38	6.263
8	8.213	39	5.572
9	8.448	40	6.238
10	8.545	41	6.529
11	8.562	42	6.636
12	8.497	43	6.720
13	8.375	44	6.785
14	8.214	45	6.846
15	8.006	46	6.896
16	7.671	47	6.920
17	6.677	48	6.922
18	7.191	49	6.714
19	7.382	50	6.078
20	7.338	51	6.882
21	7.264	52	7.141
22	7.177	53	7.182
23	7.086	54	7.116
24	6.994	55	6.922
25	6.890	56	6.583
26	6.767	57	6.064
27	6.534	58	5.350
28	5.740	59	4.402
29	6.316	60	3.217
30	6.541	61	3.239
31	6.567		

FRACTION OF AVERAGE AXIAL POWER PRODUCED IN EACH REGION

REGION NO.	TOP	BOTTOM	REGION KW/FT	FRACTION OF POWER	
1	1	61	6.700	1.0000	(UNRODDED)

INFERRED FDHH FLUX MAP 2-1-65 1- 4-77
PDQ DECK USED = MFP17.8K

	R	P	N	M	L	K	J	H	G	F	E	D	C	B	A
1					0.642	0.774	0.845	0.836	0.833	0.752	0.624				
2			0.609	0.914	1.060	0.987	1.121	1.027	1.098	0.962	1.034	0.880	0.605		
3		0.605	1.069	1.112	1.066	1.137	1.065	1.157	1.057	1.112	1.042	1.078	1.069	0.605	
4		0.902	1.097	1.164	1.124	1.036	1.151	1.072	1.121	1.037	1.124	1.162	1.089	0.896	
5	0.633	1.046	1.068	1.124	1.060	1.111	1.057	1.146	1.078	1.103	1.053	1.122	1.049	1.045	0.641
6	0.757	0.965	1.115	1.037	1.109	1.035	1.095	1.034	1.078	1.027	1.103	1.034	1.121	0.974	0.772
7	0.825	1.111	1.053	1.115	1.030	1.100	1.043	1.119	1.057	1.120	1.061	1.128	1.052	1.109	0.832
8	0.806	1.005	1.125	1.040	1.093	1.061	1.119	1.028	1.104	1.020	1.099	1.027	1.138	1.005	0.817
9	0.825	1.110	1.052	1.116	1.027	1.090	1.033	1.094	1.035	1.077	1.029	1.099	1.047	1.112	0.837
10	0.757	0.966	1.113	1.036	1.102	1.025	1.083	1.021	1.085	1.013	1.090	1.026	1.118	0.985	0.773
11	0.628	1.038	1.043	1.124	1.066	1.112	1.033	1.095	1.035	1.112	1.053	1.125	1.044	1.054	0.638
12		0.911	1.108	1.196	1.155	1.065	1.108	1.020	1.104	1.046	1.123	1.163	1.075	0.901	
13		0.607	1.072	1.108	1.072	1.109	1.022	1.097	1.041	1.139	1.057	1.075	1.041	0.589	
14			0.687	0.897	1.032	0.945	1.086	0.984	1.112	0.994	1.068	0.884	0.589		
15					0.625	0.742	0.819	0.802	0.845	0.780	0.647				

FLUX MAP 2-2- 1

DATE	MAR 27, 1977	APPROXIMATE TIME OF MAP	1430 - 1530
POWER	5.0 PERCENT OF FULL POWER	CONTROL BANK D AT	226 STEPS WITHDRAWN
BORON	1274 PPM PRESSURE 2250 PSIA	RCS T-AV	550 DEGREES F

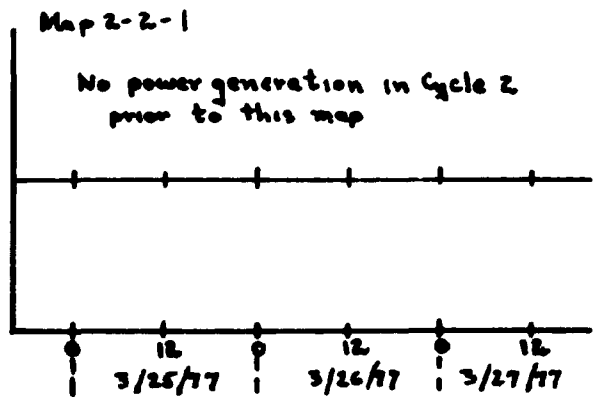

TABLE 3.3.2-24 Summary of Power Distribution Parameters for Flux Map 2-2-1

TOTAL NORMALIZED REACTION RATE INTEGRALS FLUX MAP 2-2- 1 3-27-77

	R	P	N	M	L	K	J	H	G	F	E	D	C	B	A
1							1.048			1.072					
2			0.536			1.062		1.142							
3								0.964				0.956		0.588	
4		0.941	0.916					0.913							
5					1.018				1.094				1.003		
6	1.013		0.922			1.077		1.111						1.152	
7				0.905			1.072			1.056			0.977		
8	1.035		0.926				1.056			1.092		0.909	0.979	1.205	
9		1.332							1.101		1.110				1.184
10					1.039		1.045					1.025			
11	0.763				1.056						1.137				0.810
12						0.998			0.998			1.110			
13			0.770		1.039			1.030						0.624	
14			0.603				1.333			1.161		1.017			
15					0.782			1.179							

AVERAGE AXIAL CONDITIONS FLUX MAP 2-2- 1 3-27-77
POWER LEVEL EDITED AT 3250.0 MEGAWATTS THERMAL AVERAGE KW/FT = 6.700

POINT	KW/FT	POINT	KW/FT
1	4.529	32	6.672
2	5.616	33	6.402
3	7.113	34	6.200
4	8.362	35	6.069
5	9.071	36	5.850
6	9.203	37	5.624
7	10.601	38	5.260
8	11.205	39	4.688
9	11.509	40	4.972
10	11.660	41	4.931
11	11.692	42	4.814
12	11.607	43	4.682
13	11.434	44	4.557
14	11.191	45	4.428
15	10.881	46	4.289
16	10.272	47	4.152
17	9.253	48	3.996
18	9.063	49	3.722
19	9.818	50	3.360
20	9.618	51	3.559
21	9.390	52	3.500
22	9.145	53	3.374
23	8.848	54	3.215
24	8.601	55	3.016
25	8.312	56	2.769
26	8.004	57	2.472
27	7.491	58	2.109
28	6.786	59	1.688
29	7.115	60	1.191
30	7.042	61	0.994
31	6.061		

FRACTION OF AVERAGE AXIAL POWER PRODUCED IN EACH REGION

REGION NO.	TOP	BOTTOM	REGION KW/FT	FRACTION OF POWER	
1	1	61	6.700	1.0000	(UNRODDED)

IMPERRED FORM FLUX MAP 2-2- 1 3-22-77

	R	P	N	M	L	K	J	H	G	F	E	D	C	B	A
1					0.600	0.926	1.049	1.049	1.130	1.062	0.797				
2			0.525	0.907	1.183	0.964	1.269	0.989	1.342	1.107	1.310	0.922	0.555		
3		0.525	0.801	0.826	0.910	0.876	1.020	0.048	1.032	0.933	0.963	0.850	0.847	0.576	
4		0.900	0.835	1.103	1.126	0.820	0.900	0.945	0.883	0.872	1.278	1.161	0.854	0.932	
5	0.744	1.221	0.920	1.167	0.940	1.100	1.165	0.950	1.155	1.115	0.967	1.199	0.941	1.229	0.748
6	1.003	0.900	0.833	0.039	1.091	0.005	1.035	1.133	1.039	0.822	1.120	0.889	0.901	0.900	0.997
7	1.090	1.250	0.956	0.042	1.126	1.021	1.106	1.116	1.121	1.036	1.153	0.894	1.042	1.316	1.120
8	1.051	0.975	0.811	0.910	0.905	1.108	1.100	0.875	1.130	1.141	0.955	0.948	0.854	1.027	1.145
9	1.067	1.270	1.015	0.058	1.100	1.013	1.097	1.110	1.111	1.035	1.164	0.892	1.045	1.370	1.163
10	0.901	1.022	0.916	0.066	1.094	0.807	1.020	1.134	1.030	0.830	1.164	0.910	0.906	1.100	1.063
11	0.751	1.200	0.991	1.164	0.952	1.113	1.150	0.970	1.205	1.184	1.008	1.249	0.937	1.381	0.805
12		0.921	0.823	1.139	1.200	0.090	0.920	1.009	0.940	0.926	1.248	1.169	0.897	1.037	
13		0.553	0.842	0.862	0.927	0.993	1.046	0.871	1.071	0.936	0.992	0.875	0.871	0.611	
14			0.557	0.947	1.268	1.010	1.370	1.057	1.394	1.046	1.328	1.005	0.596		
15					0.769	0.994	1.141	1.131	1.156	1.004	0.774				

FLUX MAP 2-2-10

DATE APR 23, 1977 APPROXIMATE TIME OF MAP 1030 - 1130

POWER 99.0 PERCENT OF FULL POWER CONTROL BANK D AT 225 STEPS WITHDRAWN

BORON 810 PPM PRESSURE 2246 PSIA RCS T-AV 555 DEGREES F

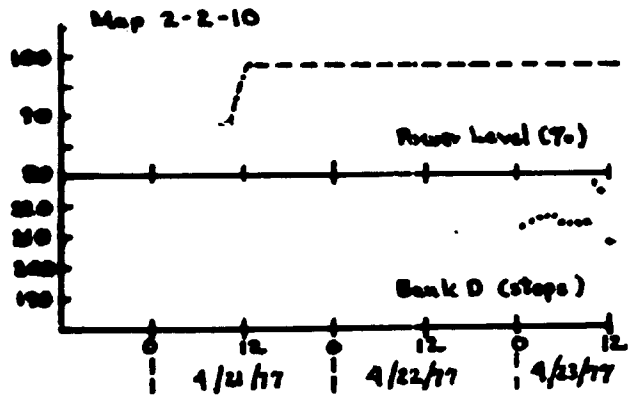

TABLE 3.3.2-25 Summary of Power Distribution Parameters for Flux Map 2-2-10

TOTAL NORMALIZED REACTION RATE INTEGRALS FLUX MAP 2-2-10 4-23-77

	R	P	N	M	L	K	J	H	G	F	E	D	C	B	A
1							1.064			0.974					
2			0.595			1.070		1.120							
3								0.945		1.002		0.930		0.615	
4		0.965	0.994					0.970							
5					1.064				1.085		1.078		1.042		
6	0.982		0.988			1.117		1.091						1.094	
7				1.002			1.071			1.040			0.993		
8			0.972		1.063		1.105			1.122		0.950	0.994	1.135	
9		1.271							1.091		1.079				1.076
10					1.045		1.047					1.021			
11	0.752				1.050			1.085			1.099				0.772
12						1.062			0.990			1.050			
13			0.840		1.042			0.967						0.631	
14			0.626				1.275			1.122		0.640			
15					0.761			1.040							

AVERAGE AXIAL CONDITIONS FLUX MAP 2-2-10 4-23-77
POWER LEVEL EDITED AT 3250.0 MEGAWATTS THERMAL AVERAGE KW/FT = 6.700

POINT	KW/FT	POINT	KW/FT
1	3.259	32	7.151
2	3.751	33	7.157
3	4.697	34	7.150
4	5.946	35	7.132
5	6.107	36	7.098
6	6.004	37	7.042
7	6.957	38	6.857
8	7.435	39	6.182
9	7.672	40	6.802
10	7.828	41	7.015
11	7.901	42	7.070
12	7.910	43	7.108
13	7.889	44	7.138
14	7.819	45	7.146
15	7.710	46	7.137
16	7.490	47	7.104
17	6.683	48	7.039
18	7.291	49	6.803
19	7.456	50	6.154
20	7.457	51	6.783
21	7.441	52	6.890
22	7.419	53	6.828
23	7.384	54	6.669
24	7.333	55	6.417
25	7.276	56	6.039
26	7.190	57	5.518
27	6.991	58	4.832
28	6.287	59	3.954
29	6.904	60	2.862
30	7.091	61	2.456
31	7.131		

FRACTION OF AVERAGE AXIAL POWER PRODUCED IN EACH REGION

REGION NO.	TOP	BOTTOM	REGION KW/FT	FRACTION OF POWER	
1	1	61	6.700	1.0000	(UNRODDED)

INFERRED FDNN FLUX MAP 2-2-10 4-23-77

	R	P	N	M	L	K	J	H	G	F	E	D	C	B	A
1					0.701	0.946	1.032	1.037	1.048	0.976	0.752				
2				0.505	0.959	1.183	1.002	1.236	0.982	1.230	0.998	1.203	0.894	0.575	
3			0.505	0.876	0.897	0.953	0.925	1.035	0.869	1.032	0.914	0.942	0.841	0.862	0.605
4			0.958	0.900	1.151	1.152	0.883	0.939	0.983	0.921	0.912	1.207	1.132	0.871	0.943
5		0.754	1.235	0.981	1.220	0.968	1.125	1.184	0.993	1.176	1.124	0.966	1.197	0.956	1.190	0.717
6		0.984	0.995	0.902	0.913	1.137	0.849	1.044	1.133	1.044	0.852	1.123	0.927	0.927	0.971	0.930
7		1.070	1.231	1.011	0.917	1.165	1.051	1.123	1.140	1.132	1.060	1.177	0.942	1.043	1.236	1.030
8		1.010	0.975	0.865	0.981	0.984	1.145	1.140	0.923	1.144	1.145	0.984	0.988	0.873	0.991	1.050
9		1.031	1.239	1.053	0.907	1.144	1.050	1.132	1.142	1.134	1.054	1.172	0.919	1.037	1.278	1.065
10		0.957	1.018	0.965	0.884	1.108	0.846	1.058	1.148	1.057	0.857	1.138	0.909	0.894	1.055	0.9[illegible]2
11		0.743	1.255	1.011	1.154	0.978	1.137	1.181	0.983	1.173	1.145	0.987	1.193	0.917	1.290	0.764
12			0.954	0.892	1.148	1.207	0.926	0.934	0.982	0.920	0.914	1.190	1.116	0.884	1.001	
13			0.596	0.892	0.892	0.949	0.937	1.044	0.862	1.030	0.933	0.968	0.851	0.862	0.620	
14				0.598	0.956	1.220	1.003	1.263	0.996	1.265	1.016	1.237	0.941	0.596	
15						0.753	0.965	1.060	1.049	1.061	0.955	0.732			

FLUX MAP 2-2-12

DATE	MAY 23, 1977	APPROXIMATE TIME OF MAP	0930 - 1030
POWER	96.0 PERCENT OF FULL POWER	CONTROL BANK D AT	213 STEPS WITHDRAWN
BORON	719 PPM	PRESSURE 2254 PSIA	RCS T-AV 557 DEGREES F

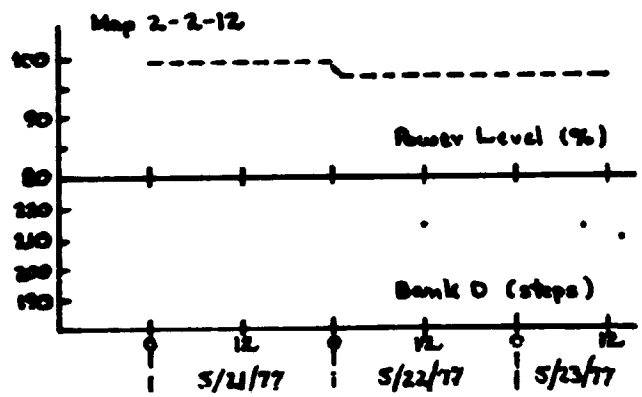

TABLE 3.3.2-26 Summary of Power Distribution Parameters for Flux Map 2-2-12

TOTAL NORMALIZED REACTION RATE INTEGRALS FLUX MAP 2-2-12 5-23-77

	R	P	N	M	L	K	J	H	G	F	E	D	C	B	A
1							1.061			0.975					
2			0.608			1.093		1.148							
3								0.956		1.017		0.961		0.633	
4		0.964	0.990					0.932							
5					1.063				1.073		1.083		1.056		
6	0.983		0.998			1.117		1.065						1.108	
7				0.997			1.072			1.026			0.979		
8	1.047		0.995		1.050		1.061			1.085		0.926	0.992	1.155	
9		1.275							1.073		1.058				1.079
10					1.033		1.036					1.030			
11	0.770				1.078			1.062			1.095				0.785
12						1.03[illegible]			0.965			1.046			
13			0.847		1.054			0.972						0.642	
14			0.639				1.266			1.121		0.962			
15					0.775			1.034							

AVERAGE AXIAL CONDITIONS FLUX MAP 2-2-12 5-23-77
POWER LEVEL EDITED AT 3250.0 MEGAWATTS THERMAL AVERAGE KW/FT = 6.700

POINT	KW/FT	POINT	KW/FT
1	2.886	32	7.293
2	3.244	33	4.318
3	4.105	34	7.328
4	4.873	35	7.322
5	5.401	36	7.307
6	5.362	37	7.259
7	6.303	38	7.071
8	6.786	39	6.379
9	7.063	40	7.047
10	7.251	41	7.277
11	7.365	42	7.347
12	7.426	43	7.400
13	7.443	44	7.437
14	7.420	45	7.465
15	7.360	46	7.468
16	7.176	47	7.446
17	6.417	48	7.397
18	7.061	49	7.171
19	7.257	50	6.466
20	7.296	51	7.163
21	7.316	52	7.306
22	7.323	53	7.254
23	7.322	54	7.119
24	7.303	55	6.874
25	7.258	56	6.493
26	7.216	57	5.959
27	7.022	58	5.238
28	6.333	59	4.305
29	6.992	60	3.116
30	7.201	61	2.744
31	7.255		

FRACTION OF AVERAGE AXIAL POWER PRODUCED IN EACH REGION

REGION NO.	TOP	BOTTOM	REGION KW/FT	FRACTION OF POWER	
1	1	61	6.700	1.0000	(UNRODDED)

INFERRED FDNW FLUX MAP 2-2-12 5-23-77

	R	P	N	M	L	K	J	H	G	F	E	D	C	B	A
1					0.717	0.958	1.045	1.050	1.061	0.987	0.764				
2				0.602	0.972	1.203	1.013	1.251	0.994	1.245	1.006	1.215	0.913	0.597	
3			0.596	0.887	0.981	0.969	0.941	1.034	0.866	1.029	0.924	0.952	0.860	0.888	0.627
4			0.959	0.901	1.139	1.148	0.882	0.916	0.966	0.910	0.913	1.208	1.138	0.890	0.963
5	0.761	1.232	0.976	1.206	0.961	1.116	1.148	0.962	1.140	1.117	0.965	1.197	0.963	1.198	0.727
6	0.995	1.001	0.896	0.983	1.118	0.858	1.035	1.116	1.027	0.847	1.112	0.921	0.927	0.970	0.939
7	1.089	1.268	1.010	0.911	1.140	1.038	1.101	1.112	1.101	1.035	1.142	0.923	1.036	1.236	1.038
8	1.062	1.012	0.871	0.974	0.958	1.120	1.111	0.904	1.113	1.116	0.958	0.971	0.869	0.992	1.062
9	1.071	1.283	1.067	0.908	1.126	1.029	1.099	1.111	1.104	1.030	1.144	0.909	1.034	1.286	1.076
10	0.978	1.035	0.977	0.890	1.107	0.846	1.038	1.122	1.036	0.848	1.126	0.906	0.904	1.069	1.009
11	0.767	1.207	1.036	1.158	0.968	1.122	1.149	0.963	1.147	1.130	0.977	1.184	0.917	1.312	0.783
12		0.971	0.892	1.150	1.159	0.921	0.917	0.972	0.910	0.908	1.175	1.106	0.890	1.021	
13		0.609	0.905	0.902	0.941	0.932	1.035	0.863	1.025	0.928	0.970	0.866	0.882	0.636	
14			0.611	0.970	1.235	1.011	1.266	0.998	1.264	1.008	1.246	0.973	0.619		
15					0.772	0.978	1.061	1.052	1.059	0.951	0.743				

FLUX MAP . -2-16

DATE JUL 5, 1977 APPROXIMATE TIME OF MAP 1030 - 1200

POWER 99.0 PERCENT OF FULL POWER CONTROL BANK D AT 221 STEPS WITHDRAWN

BORON 581 PPM PRESSURE 2254 PSIA RCS T-AV 554 DEGREES F

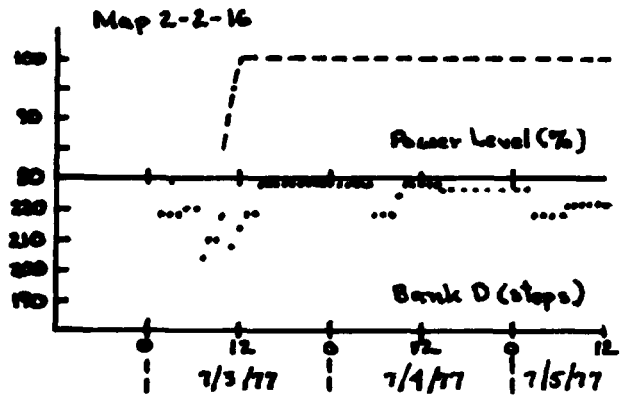

TABLE 3.3.2-27 Summary of Power Distribution Parameters for Flux Map 2-2-16

TOTAL NORMALIZED REACTION RATE INTEGRALS FLUX MAP 2-2-16 7- 5-77

	R	P	N	M	L	K	J	H	G	F	E	D	C	B	A
1							1.021			0.943					
2			0.619			1.096		1.135							
3								0.971		1.013		0.982		0.632	
4		0.951	1.010					0.961							
5					1.080				1.089		1.087		1.054		
6	0.951		1.001			1.133		1.087						1.105	
7				0.989			1.091			1.045			0.976		
8	1.008		1.003		1.075		1.074			1.098		0.957	0.992	1.139	
9		1.231							1.084		1.072				1.028
10					1.040		1.050					1.043			
11	0.760				1.088			1.081			1.106				0.763
12						1.039			0.995			1.057			
13			0.860		1.057			0.982						0.646	
14			0.543				1.211			1.108		0.948			
15					0.747			0.396							

AVERAGE AXIAL CONDITIONS
POWER LEVEL EDITED AT 3250.0 MEGAWATTS THERMAL

FLUX MAP 2-2-16
AVERAGE KW/FT = 6.700

7- 5-77

POINT	KW/FT	POINT	KW/FT
1	3.287	32	7.085
2	3.662	33	7.117
3	4.578	34	7.140
4	5.345	35	7.141
5	5.800	36	7.133
6	5.729	37	7.101
7	6.574	38	6.913
8	7.016	39	6.258
9	7.224	40	6.905
10	7.354	41	7.162
11	7.421	42	7.246
12	7.434	43	7.310
13	7.410	44	7.366
14	7.357	45	7.407
15	7.263	46	7.426
16	7.025	47	7.433
17	6.304	48	7.437
18	6.885	49	7.184
19	7.075	50	6.538
20	7.105	51	7.237
21	7.112	52	7.436
22	7.116	53	7.428
23	7.106	54	7.327
24	7.085	55	7.112
25	7.053	56	6.756
26	6.998	57	6.232
27	6.807	58	5.515
28	6.157	59	4.553
29	6.762	60	3.302
30	6.985	61	2.782
31	7.047		

FRACTION OF AVERAGE AXIAL POWER PRODUCED IN EACH REGION

REGION NO.	TOP	BOTTOM	REGION KW/FT	FRACTION OF POWER	
1	1	61	6.700	1.0000	(UNRODDED)

	R	P	N	M	L	K	J	H	G	F	E	D	C	B	A
1					0.726	0.950	1.030	1.030	1.039	0.966	0.753				
2			0.620	0.981	1.202	0.997	1.240	0.983	1.233	0.988	1.206	0.937	0.613		
3		0.615	0.902	0.912	0.964	0.935	1.037	0.876	1.032	0.918	0.952	0.879	0.900	0.634	
4		0.969	0.908	1.149	1.163	0.896	0.930	0.985	0.920	0.916	1.199	1.137	0.894	0.963	
5	0.754	1.223	0.971	1.203	0.971	1.124	1.164	0.980	1.160	1.123	0.963	1.186	0.956	1.193	0.732
6	0.974	0.986	0.982	0.987	1.123	0.865	1.052	1.132	1.046	0.861	1.119	0.913	0.920	0.964	0.940
7	1.061	1.252	1.015	0.917	1.148	1.052	1.114	1.127	1.116	1.051	1.160	0.925	1.033	1.226	1.027
8	1.038	0.997	0.871	0.905	0.967	1.135	1.124	0.917	1.122	1.127	0.973	0.980	0.872	0.977	1.035
9	1.087	1.263	1.054	0.920	1.139	1.043	1.109	1.119	1.114	1.045	1.156	0.920	1.038	1.260	1.046
10	0.966	1.014	0.952	0.901	1.112	0.857	1.051	1.131	1.050	0.862	1.132	0.918	0.919	1.031	0.981
11	0.766	1.268	1.017	1.170	0.970	1.125	1.154	0.970	1.151	1.129	0.978	1.190	0.933	1.273	0.769
12		0.975	0.895	1.145	1.193	0.920	0.924	0.982	0.918	0.915	1.181	1.120	0.900	1.012	
13		0.624	0.914	0.905	0.944	0.923	1.026	0.861	1.024	0.924	0.961	0.876	0.896	0.647	
14			0.626	0.970	1.212	0.985	1.24[illegible]	0.981	1.248	0.990	1.226	0.970	0.630		
15					0.753	0.950	1.032	1.024	1.038	0.942	0.740				

FLUX MAP 2-2-17

DATE AUG 6, 1977 APPROXIMATE TIME OF MAP 1400 - 1500

POWER 99.0 PERCENT OF FULL POWER CONTROL BANK D AT 226 STEPS WITHDRAWN

BORON 474 PPM PRESSURE 2247 PSIA RCS T-AV 554 DEGREES F

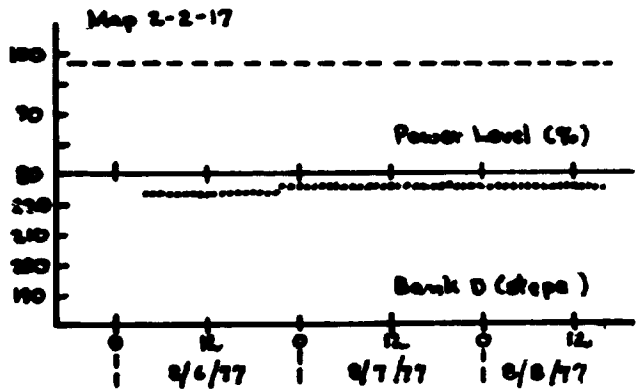

TABLE 3.3.2-28 Summary of Power Distribution Parameters for Flux Map 2-2-17

TOTAL NORMALIZED REACTION RATE INTEGRALS FLUX MAP 2-2-17 B- 8-77

	R	P	N	M	L	K	J	H	G	F	E	D	C	B	A
1							0.991			0.913					
2			0.624			1.088		1.110							
3								0.975		1.016		0.975		0.624	
4		0.939	1.018					1.007							
5					1.091				1.083		1.093		1.052		
6	0.929		0.992			1.141		1.096						1.092	
7				1.030			1.094			1.052			1.009		
8	0.972		1.002		1.083		1.122			1.137		0.958	1.028	1.125	
9		1.102							1.089		1.073				0.987
10					1.045		1.052					1.027			
11	0.741				1.084			1.092			1.112				0.739
12						1.082			0.999			1.066			
13			0.899		1.058			0.986						0.647	
14			0.647				1.182			1.135		0.932			
15					0.722			0.963							

AVERAGE AXIAL CONDITIONS — FLUX MAP 2-2-17 — 8- 8-77

POWER LEVEL EDITED AT 3250.0 MEGAWATTS THERMAL — AVERAGE KW/FT = 6.700

POINT	KW/FT	POINT	KW/FT
1	3.457	32	7.060
2	3.847	33	7.087
3	4.752	34	7.103
4	5.506	35	7.107
5	5.950	36	7.095
6	5.787	37	7.054
7	6.690	38	6.851
8	7.091	39	6.163
9	7.277	40	6.859
10	7.386	41	7.102
11	7.431	42	7.179
12	7.432	43	7.241
13	7.395	44	7.295
14	7.333	45	7.336
15	7.239	46	7.359
16	7.003	47	7.365
17	6.247	48	7.341
18	6.877	49	7.114
19	7.058	50	6.448
20	7.089	51	7.217
21	7.101	52	7.422
22	7.097	53	7.432
23	7.091	54	7.349
24	7.070	55	7.155
25	7.037	56	6.814
26	6.982	57	6.301
27	6.777	58	5.580
28	6.087	59	4.610
29	6.757	60	3.331
30	6.968	61	3.021
31	7.024		

FRACTION OF AVERAGE AXIAL POWER PRODUCED IN EACH REGION

REGION NO.	TOP	BOTTOM	REGION KW/FT	FRACTION OF POWER	
1	1	51	6.700	1.0000	(UNRODDED)

INFERRED FDHN FLUX MAP 2-2-17 8- 8-77

	R	P	N	M	L	K	J	H	G	F	E	D	C	B	A
1					0.727	0.939	1.010	1.007	1.012	0.944	0.740				
2				0.632	0.985	1.192	0.981	1.221	0.968	1.215	0.974	1.189	0.931	0.614	
3			0.624	0.988	0.913	0.956	0.927	1.040	0.885	1.037	0.919	0.944	0.872	0.894	0.632
4			0.967	0.905	1.147	1.172	0.906	0.951	1.003	0.930	0.917	1.188	1.129	0.887	0.957
5	0.749	1.207	0.969	1.192	0.976	1.128	1.183	0.995	1.175	1.120	0.964	1.101	0.948	1.183	0.729
6	0.960	0.971	0.918	0.920	1.140	0.872	1.058	1.133	1.050	0.865	1.122	0.921	0.924	0.967	0.930
7	1.036	1.231	1.025	0.927	1.164	1.067	1.128	1.145	1.132	1.073	1.173	0.943	1.041	1.236	1.012
8	1.009	0.977	0.876	1.002	0.987	1.153	1.151	0.935	1.137	1.139	0.982	0.997	0.886	0.981	1.011
9	1.016	1.235	1.035	0.924	1.143	1.050	1.132	1.134	1.133	1.061	1.158	0.925	1.040	1.251	1.021
10	0.943	0.985	0.924	0.905	1.111	0.860	1.054	1.132	1.057	0.869	1.124	0.916	0.907	0.997	0.953
11	0.753	1.236	0.991	1.171	0.980	1.134	1.168	0.971	1.151	1.127	0.973	1.185	0.932	1.233	0.752
12			0.987	0.931	1.154	1.202	0.931	0.940	0.988	0.922	0.918	1.185	1.129	0.907	1.000
13			0.646	0.940	0.920	0.963	0.932	1.034	0.861	1.032	0.938	0.966	0.881	0.904	0.655
14				0.647	0.977	1.191	0.967	1.225	0.969	1.246	1.011	1.229	0.963	0.636	
15					0.734	0.930	1.012	1.004	1.035	0.967	0.749				

FLUX MAP 2-2-18

DATE	SEP 1, 1977	APPROXIMATE TIME OF MAP	1300 - 1400
POWER	100.0 PERCENT OF FULL POWER	CONTROL BANK D AT	219 STEPS WITHDRAWN
BORON	405 PPM PRESSURE 2251 PSIA	RCS T-AV	555 DEGREES F

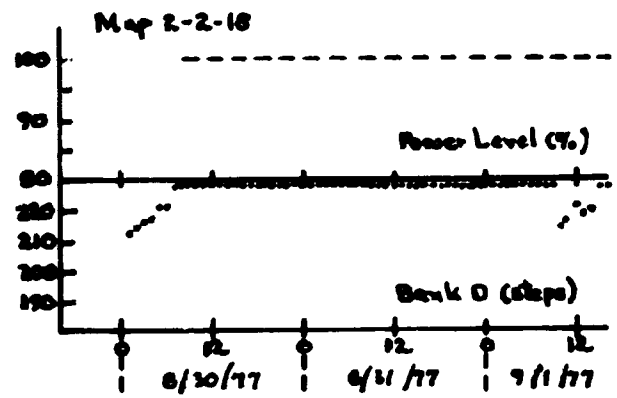

TABLE 3.3.2-29 Summary of Power Distribution Parameters for Flux Map 2-2-18

TOTAL NORMALIZED REACTION RATE INTEGRALS FLUX MAP 2-2-18 9- 1-77

	R	P	N	M	L	K	J	H	G	F	E	D	C	B	A
1							0.972			0.912					
2			0.640			1.097		1.105							
3								0.988		1.019		0.986		0.631	
4		0.939	1.016					0.973							
5					1.102				1.093		1.097		1.063		
6	0.925		1.009			1.169		1.107						1.097	
7				1.006			1.106			1.073			0.972		
8	0.957		1.023		1.095		1.085			1.099		0.987	0.994	1.124	
9		1.101							1.096		1.090				0.981
10					1.060		1.065					1.045			
11	0.735				1.101			1.097			1.137				0.739
12						1.048			1.018			1.069			
13			0.869		1.069			1.006						0.650	
14			0.660				1.158			1.089		0.928			
15					0.722			0.949							

AVERAGE AXIAL CONDITIONS FLUX MAP 2-2-18 9- 1-77
POWER LEVEL EDITED AT 3250.0 MEGAWATTS THERMAL AVERAGE KW/FT = 6.700

POINT	KW/FT	POINT	KW/FT
1	3.350	32	7.047
2	3.593	33	7.095
3	4.391	34	7.136
4	5.134	35	7.156
5	5.596	36	7.169
6	5.442	37	7.156
7	6.223	38	7.000
8	6.661	39	6.318
9	6.845	40	6.960
10	6.959	41	7.281
11	7.017	42	7.389
12	7.030	43	7.478
13	7.008	44	7.550
14	6.963	45	7.612
15	6.889	46	7.660
16	6.788	47	7.690
17	5.976	48	7.692
18	6.534	49	7.514
19	6.766	50	6.827
20	6.812	51	7.544
21	6.841	52	7.859
22	6.867	53	7.902
23	6.874	54	7.852
24	6.876	55	7.686
25	6.868	56	7.373
26	6.842	57	6.870
27	6.683	58	6.137
28	6.014	59	5.128
29	6.621	60	3.782
30	6.904	61	3.202
31	6.988		

FRACTION OF AVERAGE AXIAL POWER PRODUCED IN EACH REGION

REGION NO.	TOP	BOTTOM	REGION KW/FT	FRACTION OF POWER	
1	1	61	6.700	1.0000	(UNRODDED)

	R	P	N	M	L	K	J	H	G	F	E	D	C	B	A
1					0.733	0.937	1.001	0.995	1.007	0.948	0.747				
2			0.552	1.004	1.197	0.980	1.219	0.964	1.211	0.974	1.190	0.939	0.626		
3		0.637	0.923	0.925	0.966	0.937	1.034	0.078	1.029	0.920	0.940	0.881	0.906	0.642	
4		0.971	0.911	1.151	1.179	0.915	0.941	0.998	0.929	0.923	1.189	1.133	0.986	0.964	
5	0.752	1.200	0.966	1.199	0.989	1.144	1.179	0.989	1.168	1.126	0.966	1.184	0.955	1.185	0.734
6	0.961	0.976	0.911	0.918	1.137	0.880	1.073	1.144	1.063	0.878	1.132	0.915	0.918	0.956	0.931
7	1.029	1.232	1.024	0.929	1.160	1.069	1.129	1.140	1.136	1.066	1.160	0.925	1.027	1.206	1.007
8	1.005	0.981	0.078	1.003	0.976	1.145	1.134	0.931	1.131	1.137	0.984	0.988	0.872	0.961	1.007
9	1.012	1.236	1.050	0.940	1.156	1.050	1.110	1.127	1.119	1.057	1.150	0.928	1.034	1.230	1.017
10	0.943	0.986	0.936	0.919	1.125	0.816	1.062	1.138	1.062	0.805	1.143	0.933	0.920	0.999	0.955
11	0.752	1.229	0.991	1.184	0.979	1.133	1.159	0.980	1.160	1.147	0.986	1.197	0.940	1.234	0.756
12		0.960	0.895	1.143	1.193	0.926	0.937	1.002	0.935	0.936	1.196	1.139	0.910	1.003	
13		0.645	0.932	0.916	0.951	0.922	1.025	0.870	1.029	0.926	0.954	0.885	0.911	0.662	
14			0.648	0.975	1.193	0.965	1.217	0.966	1.225	0.968	1.198	0.964	0.644		
15					0.738	0.925	0.998	0.991	1.006	0.925	0.734				

FLUX MAP 2-2-19

DATE SEP 26, 1977 APPROXIMATE TIME OF MAP 1030 - 1130

POWER 96.5 PERCENT OF FULL POWER CONTROL BANK D AT 228 STEPS WITHDRAWN

BORON 318 PPM PRESSURE 2247 PSIA RCS T-AV 558 DEGREES F

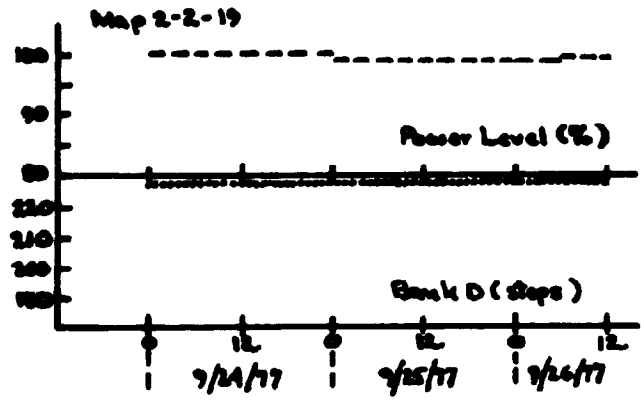

TABLE 3.3.2-30 Summary of Power Distribution Parameters for Flux Map 2-2-19

TOTAL NORMALIZED REACTION RATE INTEGRALS FLUX MAP 2-2-19 9-26-77

	R	P	N	M	L	K	J	H	G	F	E	D	C	B	A
1							0.960			0.885					
2			0.634			1.086		1.110							
3								0.983		1.027		0.991		0.634	
4		0.920	1.030					0.987							
5					1.114				1.097		1.118		1.064		
6	0.900		1.010			1.169		1.105						1.084	
7				1.019			1.117			1.060			0.977		
8	0.941		1.023		1.109		1.094			1.106		0.985	1.003	1.122	
9		1.153							1.104		1.083				0.958
10					1.054		1.071					1.059			
11	0.732				1.107			1.114			1.136				0.725
12						1.066			1.025			1.060			
13			0.882		1.071			0.997						0.662	
14			0.652				1.149			1.094		0.924			
15					0.711			0.930							

AVERAGE AXIAL CONDITIONS FLUX MAP 2-2-19 9-26-77
POWER LEVEL EDITED AT 3250.0 MEGAWATTS THERMAL AVERAGE KW/FT = 6.700

POINT	KW/FT	POINT	KW/FT
1	3.560	32	7.042
2	3.800	33	7.079
3	4.670	34	7.110
4	5.401	35	7.126
5	5.821	36	7.124
6	5.590	37	7.092
7	6.484	38	6.921
8	6.865	39	6.160
9	7.033	40	5.890
10	7.134	41	7.171
11	7.175	42	7.261
12	7.169	43	7.335
13	7.138	44	7.399
14	7.080	45	7.454
15	7.004	46	7.490
16	6.794	47	7.512
17	5.999	48	7.498
18	6.658	49	7.307
19	6.867	50	6.568
20	6.910	51	7.393
21	6.934	52	7.666
22	6.947	53	7.712
23	6.954	54	7.669
24	6.952	55	7.510
25	6.934	56	7.202
26	6.893	57	6.712
27	6.723	58	5.991
28	5.976	59	4.990
29	6.670	60	3.667
30	6.917	61	3.335
31	6.993		

FRACTION OF AVERAGE AXIAL POWER PRODUCED IN EACH REGION

REGION NO.	TOP	BOTTOM	REGION KW/FT	FRACTION OF POWER	
1	1	61	6.700	1.0000	(UNRODDED)

INFERRED FDNN FLUX MAP 2-2-19 9-26-77

	R	P	D	M	L	K	J	H	G	F	E	D	C	B	A
1					0.728	0.929	0.993	0.991	0.992	0.925	0.733				
2			0.651	0.990	1.182	0.972	1.203	0.960	1.197	0.963	1.178	0.941	0.635		
3		0.642	0.924	0.925	0.959	0.932	1.035	0.983	1.034	0.927	0.951	0.885	0.913	0.650	
4		0.969	0.912	1.159	1.107	0.925	0.946	1.005	0.936	0.933	1.196	1.138	0.899	0.965	
5	0.740	1.193	0.963	1.203	0.992	1.146	1.101	0.995	1.173	1.138	0.983	1.191	0.951	1.173	0.727
6	0.941	0.963	0.914	0.925	1.142	0.896	1.075	1.147	1.063	0.887	1.138	0.924	0.918	0.949	0.910
7	1.010	1.218	1.024	0.936	1.165	1.076	1.133	1.145	1.129	1.067	1.174	0.937	1.030	1.196	0.994
8	0.990	0.971	0.979	1.012	0.986	1.155	1.144	0.941	1.134	1.137	0.987	0.998	0.880	0.957	0.995
9	0.997	1.219	1.043	0.944	1.158	1.064	1.125	1.133	1.126	1.060	1.165	0.937	1.042	1.219	1.003
10	0.934	0.977	0.925	0.920	1.124	0.881	1.071	1.146	1.072	0.889	1.143	0.936	0.930	0.984	0.940
11	0.753	1.223	0.253	1.180	0.982	1.137	1.170	0.988	1.168	1.146	0.988	1.196	0.944	1.212	0.746
12		0.974	0.906	1.146	1.197	0.934	0.945	1.007	0.940	0.938	1.191	1.136	0.919	1.006	
13		0.651	0.935	0.917	0.957	0.920	1.027	0.970	1.027	0.931	0.956	0.849	0.923	0.679	
14			0.653	0.972	1.180	0.959	1.203	0.958	1.210	0.976	1.195	0.966	0.657		
15					0.732	0.919	0.989	0.982	0.997	0.926	0.736				

3.3.3 DETAILED LISTINGS OF ADJUSTED MOVABLE DETECTOR RESPONSE TRACES

The supplementary processing data supplied with each of the individual digitized and adjusted traces are identified in Table 3.3.3-1. The supplementary data are followed by the 61 digitized (and adjusted) samples of the detector response signal that were taken in a transit from the top of the core to the bottom and which, taken together, represent a single flux trace. The correlation of the points in the traces with the top and bottom of the active fuel region and with the fuel assembly grids is given in Table 3.3.3-2.

```
(1)  (2)  (3)  (4)          (5)   (6)     (7)     (8)     (9)   (10)
 |    |    /    /           |     |       |       |       |     |
 |    |   /    /            |     |       |       |       |     |
 |    |  /    /             |     |       |       |       |     |
 |    | /    /              |     |       |       |       |     |
 |    |/    /               |     |       |       |       |     |
 |    |    /                |     |       |       |       |     |
 |    |   /                 |     |       |       |       |     |
 |    |  /                  |     |       |       |       |     |
 |    | /                   |     |       |       |       |     |
 |    |/                    |     |       |       |       |     |
 |    |                     |     |       |       |       |     |
 |    |                     |     |       |       |       |     |
 |    |                     
```

Point Numbers	Correlating Component
0-1	Top of active fuel region
5-6	Grid at 342.0 cm
16-17	Grid at 275.4 cm
27-28	Grid at 208.9 cm
38-39	Grid at 142.4 cm
49-50	Grid at 75.9 cm
59-60	Grid at 14.4 cm
60-61	Bottom of active fuel region

TABLE 3.3.3-2 Correlation of Movable Detector Sample Points with Fuel Region Boundaries and Grid Locations

```
LUX MAP       2-1- 9

.ATE        MAR 18, 1974
'PPROXIMATE TIME OF MAP    0945 - 1045
'OWER          49.5 PERCENT OF FULL POWER
:ONTROL BANK D AT  208  STEPS WITHDRAWN
IOROW         994   PPM
'RESSURE     2246   PSIA
RCS T-AV      552   DEGREES F
```

Table 3.3.3-3 Detailed Listings of Adjusted Movable Detector Response Traces for Flux Map 2-1-9

FLUX MAP 2-1- 9

```
J-10  1 1  1                10 2.68715 0.000  9:43    61
 0.055 0.081 0.105 0.127 0.147 0.150 0.190 0.213 0.232 0.249 0.263 0.276
 0.285 0.293 0.298 0.299 0.271 0.312 0.322 0.328 0.333 0.336 0.337 0.335
 0.331 0.326 0.315 0.283 0.315 0.317 0.318 0.317 0.316 0.312 0.307 0.302
 0.294 0.281 0.253 0.278 0.278 0.275 0.270 0.263 0.255 0.245 0.234 0.222
 0.201 0.186 0.189 0.179 0.168 0.154 0.139 0.123 0.105 0.085 0.064 0.048
 0.045

J-10 12 2  1                10 2.68715 0.000  9:43    61    -1
 0.125 0.199 0.260 0.313 0.346 0.389 0.467 0.519 0.561 0.599 0.629 0.655
 0.676 0.691 0.699 0.665 0.684 0.743 0.762 0.776 0.784 0.788 0.786 0.781
 0.773 0.757 0.692 0.716 0.749 0.753 0.755 0.753 0.747 0.739 0.727 0.712
 0.692 0.618 0.651 0.669 0.665 0.656 0.643 0.627 0.606 0.581 0.552 0.517
 0.437 0.459 0.444 0.419 0.390 0.355 0.317 0.274 0.229 0.178 0.120 0.129
 0.080

G-9  22 3  1                10 2.68715 0.001  9:43    61
 0.062 0.087 0.113 0.137 0.159 0.164 0.209 0.237 0.258 0.278 0.294 0.307
 0.317 0.324 0.328 0.326 0.296 0.340 0.352 0.360 0.364 0.367 0.368 0.367
 0.364 0.359 0.347 0.312 0.349 0.353 0.354 0.353 0.351 0.347 0.342 0.334
 0.326 0.309 0.278 0.306 0.305 0.302 0.297 0.291 0.283 0.273 0.260 0.246
 0.221 0.202 0.207 0.196 0.183 0.168 0.152 0.134 0.114 0.093 0.069 0.051
 0.043

J-7  32 4  1                10 2.68715 0.000  9:43    61
 0.131 0.185 0.239 0.290 0.333 0.346 0.439 0.495 0.538 0.577 0.610 0.638
 0.658 0.673 0.681 0.674 0.619 0.709 0.731 0.745 0.755 0.760 0.762 0.759
 0.752 0.742 0.712 0.653 0.722 0.730 0.730 0.731 0.727 0.718 0.707 0.691
 0.673 0.632 0.577 0.630 0.627 0.620 0.610 0.596 0.580 0.559 0.533 0.505
 0.449 0.422 0.429 0.407 0.381 0.350 0.316 0.278 0.237 0.190 0.138 0.107
 0.083

K-12 41 5  1                30 2.68715 0.000  9:43    61
 0.062 0.110 0.157 0.201 0.237 0.246 0.310 0.355 0.389 0.419 0.445 0.467
 0.484 0.496 0.504 0.504 0.453 0.518 0.539 0.550 0.558 0.563 0.564 0.562
 0.558 0.551 0.535 0.471 0.531 0.541 0.543 0.543 0.541 0.536 0.529 0.519
 0.507 0.486 0.425 0.472 0.473 0.469 0.462 0.452 0.441 0.426 0.408 0.386
 0.356 0.309 0.325 0.310 0.291 0.268 0.243 0.215 0.185 0.151 0.114 0.077
 0.077

D-8  50 6  1                30 2.68715 0.001  9:43    61    -2
 0.065 0.088 0.127 0.156 0.208 0.243 0.270 0.292 0.310 0.324 0.335 0.343
 0.348 0.348 0.315 0.355 0.369 0.376 0.382 0.385 0.386 0.385 0.382 0.378
 0.369 0.326 0.366 0.373 0.374 0.375 0.373 0.369 0.364 0.356 0.347 0.332
 0.291 0.324 0.324 0.321 0.317 0.310 0.302 0.292 0.279 0.265 0.242 0.214
 0.223 0.212 0.193 0.183 0.166 0.146 0.125 0.101 0.076 0.053 0.050 0.026
 0.004

H-15  2 1  2                 3 2.71633 0.000  9:50    61    -2
 0.257 0.314 0.361 0.372 0.468 0.521 0.568 0.610 0.645 0.673 0.697 0.713
 0.724 0.718 0.655 0.749 0.769 0.781 0.789 0.794 0.797 0.795 0.792 0.785
 0.760 0.701 0.778 0.785 0.785 0.782 0.777 0.768 0.756 0.741 0.724 0.688
 0.636 0.689 0.686 0.580 0.671 0.659 0.642 0.619 0.594 0.564 0.483 0.478
 0.472 0.445 0.415 0.382 0.347 0.3[illegible] 0.258 0.210 0.154 0.130 0.104 0.035
 0.010
```

FLUX MAP 2-1- 3

```
J-10  1 2  2                10 2.71633 0.000  9:50     61     -2
 0.171 0.209 0.240 0.246 0.312 0.349 0.380 0.407 0.430 0.450 0.465 0.477
 0.487 0.487 0.443 0.510 0.526 0.536 0.544 0.549 0.550 0.547 0.541 0.533
 0.514 0.463 0.515 0.519 0.520 0.519 0.516 0.510 0.503 0.494 0.483 0.460
 0.416 0.456 0.454 0.450 0.442 0.431 0.418 0.403 0.386 0.356 0.325 0.307
 0.310 0.293 0.274 0.253 0.228 0.201 0.171 0.138 0.103 0.080 0.070 0.019
 0.007

R-8  23 3  2                 3 2.71633 0.013  9:50     61     -2
 0.226 0.272 0.305 0.322 0.397 0.439 0.476 0.510 0.536 0.560 0.577 0.588
 0.596 0.585 0.556 0.630 0.650 0.663 0.673 0.677 0.677 0.673 0.666 0.657
 0.622 0.594 0.645 0.651 0.650 0.649 0.646 0.638 0.629 0.616 0.600 0.559
 0.540 0.568 0.566 0.551 0.554 0.543 0.528 0.512 0.490 0.455 0.400 0.398
 0.389 0.371 0.342 0.319 0.284 0.249 0.212 0.172 0.122 0.123 0.084 0.025
 0.015

R-11 33 4  2                10 2.71633 0.000  9:50     61     -2
 0.109 0.133 0.151 0.160 0.199 0.220 0.239 0.256 0.271 0.284 0.293 0.299
 0.302 0.295 0.282 0.316 0.326 0.331 0.334 0.336 0.336 0.335 0.332 0.328
 0.312 0.301 0.326 0.328 0.327 0.326 0.323 0.319 0.315 0.309 0.302 0.281
 0.270 0.284 0.282 0.278 0.272 0.266 0.258 0.249 0.238 0.226 0.195 0.195
 0.192 0.181 0.169 0.155 0.139 0.122 0.103 0.083 0.057 0.055 0.040 0.012
 0.003

F-14 42 5  2                30 2.71633 0.000  9:50     61     -2
 0.161 0.197 0.226 0.232 0.295 0.331 0.361 0.388 0.411 0.430 0.445 0.456
 0.463 0.459 0.418 0.479 0.496 0.505 0.512 0.516 0.517 0.517 0.513 0.506
 0.488 0.439 0.493 0.499 0.501 0.501 0.499 0.494 0.487 0.477 0.464 0.440
 0.398 0.438 0.438 0.434 0.428 0.420 0.408 0.394 0.376 0.357 0.318 0.300
 0.306 0.291 0.272 0.250 0.225 0.197 0.167 0.135 0.097 0.074 0.057 0.026
 0.004

H-2  51 6  2                30 2.71633 0.001  9:50     61     -4
 0.153 0.157 0.197 0.221 0.242 0.260 0.275 0.287 0.297 0.306 0.310 0.310
 0.282 0.322 0.334 0.341 0.346 0.349 0.350 0.349 0.347 0.342 0.332 0.296
 0.332 0.337 0.338 0.339 0.336 0.332 0.328 0.322 0.314 0.300 0.269 0.297
 0.297 0.294 0.289 0.283 0.275 0.265 0.254 0.242 0.222 0.197 0.205 0.195
 0.183 0.169 0.153 0.135 0.114 0.092 0.068 0.049 0.040 0.020 0.004 0.002
 0.001

K-2   3 1  3                10 2.72264 0.000  9:57     61
 0.068 0.100 0.132 0.161 0.187 0.193 0.241 0.273 0.299 0.322 0.340 0.356
 0.368 0.378 0.385 0.385 0.349 0.397 0.413 0.421 0.428 0.431 0.432 0.431
 0.426 0.421 0.410 0.363 0.407 0.414 0.416 0.416 0.415 0.412 0.407 0.400
 0.391 0.377 0.330 0.369 0.371 0.368 0.363 0.356 0.346 0.335 0.322 0.306
 0.282 0.241 0.258 0.246 0.230 0.213 0.193 0.171 0.147 0.122 0.092 0.060
 0.064

A-11 13 2  3                10 2.72264 0.000  9:57     61
 0.066 0.065 0.089 0.112 0.133 0.141 0.171 0.196 0.215 0.233 0.247 0.259
 0.268 0.274 0.277 0.278 0.255 0.283 0.297 0.305 0.310 0.313 0.314 0.314
 0.312 0.309 0.304 0.270 0.299 0.304 0.305 0.305 0.304 0.301 0.298 0.294
 0.288 0.280 0.244 0.268 0.269 0.267 0.264 0.260 0.255 0.248 0.238 0.227
 0.213 0.179 0.190 0.181 0.170 0.158 0.143 0.128 0.111 0.093 0.071 0.047
 0.057
```

FLUX MAP 2-1- 9

```
J-10  1 3  3                 3 2.72264 0.009  9:57    61
 0.187 0.238 0.299 0.361 0.415 0.425 0.535 0.596 0.649 0.696 0.736 0.770
 0.795 0.816 0.831 0.833 0.758 0.871 0.898 0.919 0.930 0.939 0.940 0.933
 0.923 0.909 0.877 0.790 0.878 0.886 0.887 0.887 0.882 0.872 0.860 0.845
 0.825 0.789 0.711 0.781 0.779 0.769 0.756 0.738 0.716 0.690 0.659 0.629
 0.575 0.520 0.534 0.506 0.476 0.439 0.399 0.354 0.303 0.250 0.190 0.140
 0.140

B-8  34 4  3                10 2.72264 0.000  9:57    61
 0.122 0.178 0.235 0.288 0.336 0.346 0.436 0.493 0.541 0.583 0.619 0.648
 0.670 0.686 0.694 0.592 0.624 0.710 0.734 0.749 0.760 0.767 0.771 0.771
 0.766 0.759 0.740 0.650 0.742 0.755 0.759 0.759 0.756 0.749 0.738 0.725
 0.705 0.675 0.595 0.661 0.662 0.658 0.648 0.636 0.620 0.600 0.576 0.549
 0.508 0.440 0.464 0.442 0.414 0.382 0.345 0.307 0.263 0.217 0.163 0.109
 0.113

H-4  43 5  3                30 2.72264 0.000  9:57    61
 0.049 0.073 0.100 0.135 0.197 0.240 0.319 0.368 0.408 0.443 0.470 0.492
 0.508 0.519 0.526 0.524 0.474 0.540 0.557 0.567 0.574 0.578 0.579 0.576
 0.571 0.565 0.548 0.487 0.548 0.557 0.560 0.560 0.558 0.553 0.544 0.534
 0.521 0.497 0.437 0.437 0.488 0.433 0.476 0.466 0.453 0.437 0.418 0.397
 0.364 0.317 0.334 0.318 0.298 0.275 0.249 0.221 0.190 0.156 0.117 0.080
 0.079

B-3  52 6  3                10 2.72264 0.001  9:57    61    -2
 0.108 0.136 0.162 0.169 0.208 0.237 0.260 0.280 0.299 0.314 0.325 0.333
 0.338 0.340 0.309 0.348 0.363 0.371 0.376 0.378 0.379 0.378 0.374 0.370
 0.362 0.320 0.356 0.360 0.360 0.360 0.359 0.357 0.354 0.349 0.343 0.333
 0.293 0.322 0.322 0.319 0.314 0.308 0.301 0.292 0.282 0.270 0.251 0.212
 0.226 0.215 0.201 0.186 0.170 0.151 0.130 0.107 0.082 0.057 0.072 0.024
 0.007

K-6  14 2  4                10 2.70523 0.000 10:05    61
 0.111 0.160 0.213 0.261 0.306 0.318 0.392 0.448 0.493 0.531 0.566 0.594
 0.615 0.632 0.643 0.545 0.586 0.657 0.688 0.705 0.717 0.724 0.729 0.728
 0.724 0.715 0.700 0.621 0.690 0.704 0.708 0.707 0.703 0.696 0.685 0.671
 0.654 0.629 0.545 0.607 0.609 0.602 0.593 0.581 0.566 0.547 0.524 0.498
 0.461 0.398 0.423 0.403 0.378 0.349 0.316 0.281 0.239 0.197 0.149 0.100
 0.104

C-5  24 3  4                10 2.70523 0.001 10:05    61
 0.055 0.080 0.107 0.132 0.156 0.163 0.204 0.233 0.258 0.278 0.295 0.310
 0.321 0.330 0.335 0.337 0.305 0.345 0.361 0.369 0.376 0.379 0.382 0.381
 0.379 0.375 0.366 0.324 0.361 0.367 0.369 0.368 0.367 0.363 0.358 0.352
 0.344 0.332 0.289 0.323 0.325 0.323 0.319 0.314 0.305 0.295 0.281 0.266
 0.245 0.212 0.224 0.214 0.201 0.186 0.170 0.151 0.129 0.106 0.081 0.054
 0.055

L-13 35 4  4                10 2.70523 0.000 10:05    61
 0.093 0.162 0.229 0.284 0.331 0.349 0.445 0.499 0.548 0.587 0.622 0.649
 0.671 0.688 0.696 0.689 0.643 0.731 0.755 0.772 0.784 0.791 0.794 0.792
 0.787 0.775 0.743 0.686 0.760 0.769 0.770 0.770 0.765 0.757 0.746 0.731
 0.710 0.665 0.624 0.668 0.665 0.658 0.648 0.635 0.618 0.597 0.570 0.539
 0.474 0.459 0.459 0.434 0.406 0.374 0.337 0.298 0.251 0.203 0.147 0.115
 0.085
```

FLUX MAP 2-1- 9

```
M-7  44 5  4                30 2.70523 0.000 10:05    61
 0.073 0.093 0.124 0.155 0.185 0.194 0.250 0.285 0.316 0.340 0.362 0.380
 0.393 0.402 0.408 0.408 0.369 0.421 0.437 0.446 0.454 0.460 0.464 0.464
 0.461 0.456 0.444 0.394 0.441 0.446 0.447 0.447 0.445 0.441 0.434 0.426
 0.415 0.398 0.352 0.389 0.388 0.385 0.378 0.371 0.361 0.348 0.333 0.316
 0.288 0.259 0.268 0.253 0.237 0.218 0.197 0.175 0.149 0.123 0.093 0.065
 0.063

L-15 53 6  4                10 2.70523 0.001 10:05    61    -1
 0.103 0.141 0.173 0.197 0.207 0.258 0.288 0.313 0.338 0.359 0.377 0.389
 0.398 0.403 0.396 0.372 0.421 0.434 0.445 0.452 0.455 0.456 0.454 0.450
 0.444 0.423 0.399 0.433 0.434 0.433 0.430 0.427 0.422 0.415 0.408 0.398
 0.368 0.357 0.376 0.374 0.370 0.365 0.358 0.350 0.338 0.324 0.306 0.261
 0.264 0.259 0.245 0.228 0.209 0.188 0.164 0.139 0.110 0.077 0.075 0.055
 0.014

L-10  4 1  5                10 2.70588 0.000 10:11    61
 0.069 0.093 0.119 0.144 0.164 0.173 0.216 0.239 0.260 0.279 0.295 0.308
 0.318 0.325 0.330 0.327 0.312 0.348 0.357 0.364 0.369 0.372 0.372 0.370
 0.367 0.362 0.340 0.331 0.354 0.356 0.358 0.357 0.354 0.351 0.345 0.338
 0.330 0.302 0.302 0.315 0.313 0.310 0.305 0.298 0.289 0.278 0.265 0.251
 0.219 0.216 0.213 0.202 0.189 0.174 0.156 0.136 0.115 0.092 0.067 0.057
 0.041

F-1  15 2  5                10 2.70588 0.000 10:11    61
 0.068 0.079 0.106 0.130 0.153 0.158 0.197 0.223 0.244 0.262 0.280 0.293
 0.304 0.312 0.317 0.320 0.288 0.331 0.343 0.351 0.356 0.359 0.361 0.359
 0.357 0.352 0.344 0.308 0.344 0.349 0.349 0.349 0.346 0.344 0.340 0.334
 0.328 0.314 0.279 0.308 0.307 0.304 0.299 0.293 0.285 0.276 0.265 0.253
 0.234 0.204 0.215 0.205 0.193 0.177 0.160 0.141 0.120 0.099 0.073 0.054
 0.057

B-13 25 3  5                 3 2.70588 0.011 10:11    61
 0.085 0.111 0.142 0.174 0.200 0.210 0.260 0.287 0.316 0.338 0.358 0.375
 0.387 0.396 0.403 0.409 0.380 0.425 0.438 0.448 0.453 0.455 0.459 0.452
 0.449 0.446 0.422 0.412 0.438 0.441 0.441 0.438 0.438 0.431 0.425 0.420
 0.411 0.379 0.379 0.391 0.388 0.383 0.382 0.369 0.360 0.350 0.335 0.318
 0.279 0.272 0.271 0.256 0.240 0.219 0.197 0.174 0.146 0.123 0.086 0.085
 0.061

J-10  1 4  5                10 2.70588 0.000 10:11    61
 0.110 0.143 0.183 0.219 0.250 0.263 0.329 0.365 0.398 0.426 0.451 0.471
 0.487 0.500 0.510 0.504 0.484 0.539 0.554 0.566 0.572 0.576 0.576 0.572
 0.566 0.556 0.523 0.509 0.544 0.547 0.548 0.546 0.542 0.536 0.528 0.518
 0.506 0.464 0.460 0.481 0.478 0.473 0.463 0.452 0.437 0.420 0.402 0.382
 0.334 0.328 0.325 0.308 0.288 0.264 0.236 0.207 0.174 0.141 0.103 0.088
 0.068

N-13 45 5  5                30 2.70588 0.000 10:11    61
 0.059 0.075 0.101 0.125 0.148 0.155 0.200 0.226 0.250 0.270 0.287 0.300
 0.311 0.317 0.322 0.323 0.295 0.338 0.348 0.356 0.360 0.362 0.362 0.360
 0.356 0.352 0.340 0.308 0.346 0.350 0.353 0.353 0.351 0.347 0.341 0.334
 0.327 0.310 0.286 0.311 0.312 0.310 0.306 0.301 0.292 0.282 0.269 0.255
 0.231 0.211 0.219 0.209 0.196 0.181 0.163 0.143 0.121 0.098 0.071 0.054
 0.049
```

FLUX MAP 2-1- 9

```
N-6  54 6  5                10 2.70588 0.002 10:11    61    -2
 0.294 0.361 0.413 0.430 0.543 0.610 0.667 0.716 0.760 0.797 0.827 0.848
 0.863 0.863 0.790 0.902 0.931 0.949 0.961 0.967 0.966 0.963 0.954 0.943
 0.908 0.840 0.929 0.940 0.944 0.945 0.940 0.930 0.915 0.895 0.871 0.813
 0.769 0.819 0.815 0.807 0.794 0.778 0.756 0.731 0.702 0.667 0.596 0.567
 0.571 0.542 0.506 0.467 0.421 0.369 0.309 0.249 0.181 0.136 0.107 0.028
 0.011

H-6   6 1  6                10 2.70323 0.000 10:18    61
 0.075 0.105 0.137 0.166 0.190 0.197 0.249 0.280 0.305 0.327 0.347 0.362
 0.375 0.384 0.390 0.387 0.357 0.409 0.424 0.432 0.437 0.440 0.441 0.439
 0.434 0.427 0.406 0.382 0.419 0.423 0.425 0.425 0.422 0.418 0.411 0.403
 0.392 0.364 0.346 0.367 0.366 0.362 0.355 0.346 0.336 0.323 0.309 0.294
 0.262 0.249 0.252 0.238 0.222 0.204 0.183 0.161 0.137 0.111 0.079 0.062
 0.048

F-7  16 2  6                10 2.70323 0.000 10:18    61
 0.104 0.116 0.154 0.191 0.224 0.235 0.289 0.331 0.364 0.392 0.417 0.438
 0.455 0.467 0.476 0.480 0.436 0.488 0.508 0.518 0.526 0.531 0.533 0.533
 0.529 0.523 0.511 0.453 0.509 0.517 0.521 0.522 0.520 0.515 0.507 0.497
 0.485 0.466 0.406 0.451 0.451 0.446 0.440 0.432 0.421 0.407 0.390 0.371
 0.344 0.295 0.311 0.295 0.276 0.254 0.229 0.204 0.175 0.145 0.111 0.079
 0.091

H-11 26 3  6                10 2.70323 0.001 10:18    61    -1
 0.057 0.077 0.098 0.119 0.134 0.151 0.184 0.205 0.224 0.240 0.254 0.264
 0.273 0.280 0.283 0.273 0.276 0.300 0.307 0.312 0.316 0.317 0.317 0.317
 0.314 0.309 0.280 0.294 0.305 0.305 0.305 0.303 0.301 0.297 0.293 0.287
 0.279 0.249 0.265 0.269 0.269 0.265 0.261 0.254 0.246 0.236 0.225 0.212
 0.190 0.186 0.180 0.169 0.157 0.144 0.128 0.112 0.094 0.075 0.053 0.052
 0.033

N-4  36 4  6                10 2.70323 0.000 10:16    61    -1
 0.083 0.115 0.153 0.191 0.221 0.245 0.306 0.343 0.376 0.403 0.428 0.446
 0.461 0.471 0.477 0.465 0.457 0.503 0.518 0.523 0.536 0.541 0.542 0.540
 0.535 0.528 0.487 0.493 0.518 0.520 0.521 0.520 0.517 0.512 0.504 0.494
 0.481 0.435 0.448 0.458 0.455 0.449 0.441 0.430 0.418 0.403 0.385 0.366
 0.315 0.322 0.315 0.297 0.277 0.255 0.228 0.200 0.168 0.135 0.098 0.090
 0.063

J-10  1 5  6                30 2.70323 0.000 10:18    61
 0.073 0.095 0.122 0.149 0.169 0.176 0.221 0.247 0.269 0.288 0.305 0.318
 0.329 0.339 0.345 0.343 0.320 0.364 0.375 0.382 0.388 0.391 0.391 0.389
 0.385 0.378 0.356 0.342 0.369 0.371 0.372 0.371 0.369 0.364 0.358 0.351
 0.343 0.317 0.311 0.326 0.325 0.320 0.314 0.306 0.296 0.285 0.273 0.259
 0.227 0.223 0.221 0.208 0.195 0.179 0.161 0.141 0.119 0.096 0.071 0.059
 0.047

G-12 55 6  6                10 2.70323 0.001 10:18    61    -1
 0.207 0.269 0.334 0.390 0.418 0.530 0.594 0.651 0.699 0.739 0.773 0.799
 0.820 0.835 0.826 0.787 0.880 0.901 0.914 0.919 0.926 0.934 0.935 0.929
 0.916 0.867 0.845 0.894 0.898 0.899 0.896 0.889 0.877 0.862 0.843 0.820
 0.741 0.757 0.782 0.776 0.767 0.754 0.737 0.715 0.689 0.658 0.623 0.538
 0.542 0.532 0.504 0.469 0.430 0.386 0.336 0.283 0.226 0.165 0.145 0.102
 0.023
```

FLUX MAP 2-1- 9

```
D-12  7 1  7                10 2.70386 0.000 10:25     61     +1
 0.036 0.038 0.051 0.071 0.095 0.137 0.169 0.226 0.261 0.289 0.312 0.330
 0.345 0.356 0.364 0.370 0.366 0.342 0.388 0.399 0.406 0.412 0.415 0.415
 0.414 0.410 0.405 0.388 0.361 0.398 0.403 0.405 0.405 0.404 0.400 0.395
 0.387 0.378 0.354 0.333 0.357 0.356 0.351 0.346 0.339 0.329 0.317 0.304
 0.289 0.258 0.244 0.247 0.235 0.220 0.204 0.184 0.162 0.138 0.112 0.082
 0.058

R-6  17 2  7                10 2.70386 0.000 10:25     61
 0.074 0.073 0.100 0.125 0.149 0.160 0.189 0.219 0.242 0.262 0.279 0.293
 0.304 0.312 0.317 0.320 0.294 0.328 0.344 0.353 0.359 0.364 0.365 0.364
 0.360 0.356 0.348 0.309 0.341 0.348 0.349 0.349 0.347 0.344 0.341 0.336
 0.330 0.320 0.277 0.307 0.307 0.304 0.299 0.293 0.285 0.277 0.267 0.254
 0.239 0.201 0.214 0.204 0.191 0.177 0.161 0.144 0.124 0.103 0.079 0.054
 0.070

J-14 27 3  7                 3 2.70386 0.009 10:25     61
 0.215 0.176 0.234 0.296 0.351 0.395 0.423 0.516 0.570 0.619 0.663 0.700
 0.731 0.755 0.773 0.787 0.753 0.772 0.829 0.848 0.865 0.876 0.882 0.881
 0.876 0.867 0.853 0.783 0.808 0.848 0.854 0.856 0.854 0.846 0.838 0.826
 0.807 0.788 0.705 0.737 0.749 0.742 0.734 0.719 0.704 0.685 0.661 0.633
 0.600 0.514 0.531 0.513 0.485 0.453 0.416 0.376 0.326 0.276 0.219 0.157
 0.184

D-14 37 4  7                10 2.70386 0.000 10:25     61
 0.083 0.095 0.130 0.164 0.193 0.200 0.249 0.284 0.312 0.337 0.358 0.375
 0.390 0.401 0.409 0.411 0.372 0.427 0.443 0.453 0.460 0.464 0.464 0.462
 0.458 0.453 0.442 0.389 0.443 0.453 0.457 0.458 0.456 0.453 0.446 0.438
 0.427 0.410 0.350 0.397 0.397 0.393 0.386 0.379 0.371 0.360 0.348 0.332
 0.308 0.265 0.282 0.269 0.253 0.235 0.214 0.189 0.163 0.133 0.101 0.067
 0.080

J-8  46 5  7                30 2.70386 0.000 10:25     61
 0.071 0.086 0.113 0.141 0.167 0.177 0.224 0.257 0.284 0.308 0.328 0.345
 0.358 0.368 0.374 0.375 0.341 0.387 0.399 0.406 0.411 0.415 0.418 0.419
 0.417 0.412 0.402 0.359 0.399 0.403 0.402 0.401 0.397 0.393 0.388 0.380
 0.372 0.357 0.319 0.353 0.352 0.348 0.342 0.334 0.324 0.313 0.300 0.285
 0.263 0.231 0.241 0.229 0.215 0.199 0.181 0.159 0.137 0.112 0.085 0.058
 0.061

J-10  1 6  7                10 2.70386 0.001 10:25     61     -2
 0.219 0.273 0.323 0.343 0.406 0.474 0.519 0.561 0.598 0.629 0.655 0.674
 0.689 0.697 0.643 0.708 0.746 0.763 0.776 0.785 0.788 0.786 0.779 0.768
 0.751 0.663 0.733 0.745 0.747 0.747 0.743 0.735 0.724 0.712 0.698 0.676
 0.587 0.652 0.654 0.648 0.637 0.623 0.606 0.584 0.559 0.533 0.499 0.425
 0.452 0.430 0.405 0.375 0.341 0.304 0.262 0.216 0.168 0.118 0.136 0.052
 0.013

B-6   8 1  8                10 2.69939 0.000 10:34     61
 0.068 0.098 0.129 0.159 0.184 0.189 0.238 0.269 0.293 0.316 0.335 0.351
 0.364 0.374 0.381 0.381 0.348 0.399 0.413 0.423 0.429 0.431 0.432 0.430
 0.425 0.418 0.399 0.368 0.409 0.415 0.418 0.418 0.416 0.412 0.406 0.397
 0.386 0.362 0.338 0.366 0.366 0.362 0.358 0.351 0.342 0.330 0.314 0.297
 0.263 0.251 0.252 0.239 0.223 0.205 0.185 0.163 0.138 0.111 0.080 0.064
 0.046
```

FLUX MAP 2-1- 9

```
N-14 18 2  8                3 2.69939 0.001 10:34    61
 0.158 0.169 0.233 0.299 0.358 0.378 0.465 0.536 0.591 0.642 0.683 0.721
 0.747 0.767 0.780 0.781 0.701 0.799 0.830 0.850 0.861 0.868 0.867 0.866
 0.860 0.851 0.834 0.742 0.834 0.842 0.841 0.838 0.830 0.821 0.812 0.800
 0.784 0.757 0.573 0.744 0.742 0.732 0.725 0.710 0.692 0.671 0.638 0.605
 0.555 0.495 0.511 0.485 0.455 0.418 0.378 0.334 0.285 0.232 0.177 0.136
 0.138

J-1  28 3  8                3 2.69939 0.008 10:34    61
 0.137 0.172 0.226 0.279 0.325 0.331 0.414 0.464 0.506 0.547 0.577 0.606
 0.627 0.642 0.653 0.653 0.595 0.678 0.698 0.712 0.718 0.722 0.722 0.720
 0.717 0.710 0.682 0.644 0.708 0.714 0.716 0.713 0.708 0.702 0.693 0.683
 0.668 0.624 0.591 0.534 0.629 0.624 0.613 0.601 0.585 0.565 0.539 0.510
 0.451 0.439 0.432 0.409 0.381 0.352 0.317 0.280 0.237 0.192 0.141 0.125
 0.097

G-5  38 4  8               10 2.69939 0.000 10:34    61
 0.122 0.171 0.226 0.282 0.330 0.341 0.430 0.491 0.538 0.580 0.616 0.646
 0.671 0.690 0.703 0.705 0.641 0.740 0.770 0.789 0.800 0.804 0.804 0.800
 0.792 0.779 0.750 0.681 0.758 0.767 0.769 0.768 0.763 0.755 0.744 0.730
 0.713 0.674 0.612 0.672 0.672 0.666 0.656 0.642 0.624 0.602 0.573 0.543
 0.486 0.452 0.459 0.435 0.407 0.374 0.339 0.298 0.253 0.204 0.151 0.113
 0.092

C-7  47 5  8               30 2.69939 0.000 10:34    61
 0.087 0.125 0.166 0.206 0.240 0.247 0.315 0.357 0.391 0.422 0.449 0.470
 0.487 0.499 0.507 0.506 0.463 0.533 0.552 0.566 0.574 0.578 0.579 0.576
 0.570 0.561 0.535 0.501 0.551 0.556 0.558 0.558 0.555 0.550 0.541 0.529
 0.516 0.480 0.454 0.439 0.487 0.482 0.475 0.465 0.454 0.438 0.418 0.396
 0.347 0.337 0.334 0.316 0.294 0.269 0.242 0.213 0.180 0.145 0.104 0.086
 0.062

A-9  56 6  8               10 2.69939 0.001 10:34    61    -2
 0.155 0.201 0.242 0.275 0.285 0.354 0.391 0.424 0.452 0.478 0.500 0.516
 0.532 0.541 0.535 0.508 0.578 0.597 0.611 0.619 0.621 0.619 0.614 0.607
 0.597 0.548 0.566 0.592 0.595 0.596 0.594 0.591 0.586 0.578 0.567 0.553
 0.496 0.522 0.533 0.530 0.525 0.517 0.506 0.490 0.474 0.452 0.422 0.356
 0.374 0.360 0.339 0.314 0.286 0.255 0.222 0.185 0.144 0.096 0.116 0.073
 0.013

E-9   9 1  9               10 2.69894 0.000 10:41    61
 0.074 0.102 0.136 0.165 0.193 0.200 0.255 0.288 0.317 0.340 0.360 0.377
 0.392 0.402 0.409 0.411 0.373 0.428 0.445 0.454 0.461 0.465 0.467 0.466
 0.463 0.457 0.445 0.395 0.444 0.450 0.451 0.450 0.447 0.443 0.436 0.427
 0.416 0.399 0.352 0.391 0.391 0.387 0.382 0.374 0.365 0.352 0.338 0.320
 0.295 0.256 0.270 0.257 0.242 0.224 0.204 0.180 0.155 0.127 0.096 0.065
 0.066

N-2  19 2  9                3 2.69894 0.001 10:41    61
 0.170 0.157 0.220 0.282 0.339 0.376 0.434 0.512 0.568 0.614 0.658 0.695
 0.724 0.745 0.759 0.769 0.728 0.764 0.816 0.837 0.852 0.857 0.862 0.862
 0.853 0.850 0.837 0.767 0.803 0.832 0.832 0.833 0.829 0.824 0.816 0.804
 0.790 0.771 0.685 0.725 0.729 0.720 0.704 0.691 0.672 0.657 0.634 0.607
 0.570 0.492 0.518 0.503 0.477 0.445 0.408 0.363 0.315 0.265 0.206 0.143
 0.173
```

FLUX MAP 2-1- 9

```
L-8  29 3  9                10 2.69894 0.000 10:41    61
 0.055 0.062 0.083 0.103 0.124 0.133 0.167 0.192 0.212 0.229 0.245 0.257
 0.267 0.274 0.280 0.283 0.259 0.289 0.302 0.308 0.312 0.315 0.317 0.316
 0.314 0.311 0.304 0.270 0.297 0.303 0.303 0.302 0.301 0.298 0.295 0.289
 0.283 0.275 0.240 0.266 0.268 0.267 0.264 0.259 0.252 0.244 0.233 0.221
 0.207 0.173 0.185 0.177 0.166 0.154 0.141 0.125 0.108 0.090 0.070 0.048
 0.053

D-3  39 4  9                10 2.69894 0.000 10:41    61
 0.081 0.096 0.134 0.170 0.208 0.224 0.284 0.328 0.363 0.392 0.418 0.439
 0.456 0.469 0.477 0.482 0.440 0.489 0.508 0.517 0.525 0.530 0.533 0.534
 0.532 0.528 0.520 0.463 0.512 0.522 0.524 0.524 0.523 0.519 0.513 0.505
 0.495 0.479 0.419 0.462 0.462 0.458 0.452 0.444 0.434 0.421 0.405 0.387
 0.361 0.306 0.324 0.308 0.290 0.269 0.246 0.219 0.189 0.153 0.122 0.086
 0.099

F-8  48 5  9                30 2.69894 0.000 10:41    61
 0.078 0.112 0.150 0.184 0.216 0.226 0.283 0.323 0.356 0.383 0.408 0.428
 0.444 0.456 0.463 0.464 0.421 0.476 0.496 0.505 0.512 0.517 0.519 0.518
 0.515 0.509 0.497 0.436 0.491 0.501 0.503 0.502 0.498 0.493 0.486 0.476
 0.464 0.446 0.390 0.434 0.436 0.432 0.426 0.418 0.407 0.393 0.376 0.356
 0 330 0.280 0.300 0.286 0.269 0.248 0.225 0.199 0.171 0.142 0.107 0.072
 0.078

P-9  57 6  9                10 2.69894 0.001 10:41    61    -2
 0.204 0.254 0.304 0.331 0.380 0.447 0.493 0.532 0.566 0.595 0.619 0.638
 0.652 0.661 0.625 0.659 0.703 0.720 0.733 0.742 0.745 0.745 0.741 0.735
 0.723 0.658 0.700 0.720 0.722 0.722 0.718 0.712 0.703 0.694 0.682 0.664
 0.585 0.633 0.642 0.637 0.629 0.617 0.600 0.579 0.556 0.531 0.499 0.418
 0.445 0.429 0.404 0.377 0.345 0.309 0.269 0.222 0.173 0.121 0.161 0.075
 0.015

H-3  10 1 10                10 2.69539 0.000 10:47    61
 0.066 0.080 0.109 0.136 0.164 0.175 0.217 0.251 0.279 0.302 0.321 0.338
 0.351 0.360 0.367 0.370 0.339 0.375 0.393 0.401 0.408 0.412 0.415 0.416
 0.415 0.410 0.403 0.356 0.390 0.397 0.398 0.398 0.396 0.393 0.387 0.380
 0.371 0.358 0.313 0.344 0.345 0.342 0.338 0.332 0.323 0.313 0.300 0.287
 0.269 0.227 0.242 0.233 0.220 0.205 0.188 0.168 0.145 0.120 0.094 0.064
 0.069

H-13 20 2 10                10 2.69539 0.000 10:47    61
 0.123 0.122 0.167 0.212 0.259 0.289 0.338 0.405 0.453 0.494 0.529 0.558
 0.582 0.598 0.611 0.517 0.585 0.607 0.650 0.665 0.676 0.682 0.686 0.687
 0.684 0.679 0.670 0.612 0.639 0.663 0.664 0.663 0.659 0.653 0.644 0.634
 0.622 0.606 0.536 0.569 0.577 0.570 0.562 0.551 0.538 0.523 0.504 0.482
 0.456 0.386 0.405 0.393 0.372 0.347 0.318 0.285 0.247 0.206 0.164 0.116
 0.112

F-3  30 3 10                10 2.69539 0.001 10:47    61
 0.066 0.066 0.091 0.114 0.137 0.149 0.174 0.205 0.227 0.247 0.263 0.277
 0.289 0.297 0.304 0.307 0.292 0.306 0.326 0.334 0.339 0.342 0.344 0.344
 0.343 0.340 0.334 0.303 0.320 0.333 0.334 0.335 0.334 0.331 0.327 0.321
 0.314 0.305 0.269 0.290 0.295 0.294 0.291 0.286 0.279 0.271 0.261 0.249
 0.235 0.200 0.208 0.201 0.190 0.177 0.162 0.145 0.126 0.105 0.083 0.057
 0.056
```

FLUX MAP 2-1- 9

```
L-11 40 4 10                10 2.69539 0.000 10:47    51
 0.129 0.151 0.236 0.288 0.333 0.346 0.442 0.496 0.544 0.585 0.619 0.648
 0.670 0.687 0.698 0.692 0.638 0.730 0.753 0.769 0.779 0.785 0.787 0.783
 0.776 0.766 0.736 0.676 0.751 0.760 0.763 0.763 0.758 0.750 0.739 0.727
 0.707 0.669 0.619 0.574 0.674 0.666 0.655 0.640 0.620 0.598 0.571 0.541
 0.489 0.447 0.461 0.438 0.411 0.379 0.343 0.302 0.257 0.208 0.154 0.111
 0.095

C-8  49 5 10                30 2.69539 0.000 10:47    61
 0.083 0.097 0.125 0.158 0.192 0.209 0.255 0.298 0.330 0.357 0.381 0.399
 0.415 0.427 0.437 0.443 0.410 0.447 0.469 0.480 0.486 0.490 0.492 0.491
 0.488 0.484 0.475 0.425 0.464 0.477 0.481 0.482 0.482 0.479 0.473 0.465
 0.454 0.439 0.381 0.418 0.421 0.418 0.413 0.406 0.396 0.385 0.371 0.354
 0.333 0.282 0.300 0.287 0.271 0.251 0.226 0.203 0.175 0.144 0.113 0.076
 0.062

N-6  58 6 10                30 2.69539 0.001 10:47    61    -2
 0.085 0.108 0.130 0.142 0.172 0.201 0.223 0.241 0.258 0.270 0.281 0.289
 0.295 0.298 0.277 0.300 0.318 0.326 0.333 0.337 0.339 0.339 0.337 0.333
 0.326 0.290 0.317 0.324 0.325 0.326 0.325 0.322 0.318 0.311 0.305 0.297
 0.259 0.286 0.289 0.288 0.284 0.279 0.272 0.263 0.253 0.240 0.224 0.188
 0.201 0.192 0.131 0.163 0.153 0.137 0.118 0.098 0.076 0.051 0.055 0.023
 0.005

L-5  11 1 11                10 2.68936 0.000 10:54    61
 0.062 0.085 0.115 0.146 0.175 0.194 0.221 0.265 0.294 0.318 0.340 0.359
 0.374 0.386 0.394 0.399 0.378 0.389 0.422 0.433 0.441 0.446 0.448 0.448
 0.446 0.441 0.433 0.397 0.407 0.428 0.431 0.431 0.430 0.427 0.422 0.415
 0.406 0.395 0.353 0.367 0.379 0.376 0.373 0.367 0.359 0.348 0.332 0.317
 0.296 0.251 0.263 0.255 0.241 0.224 0.204 0.183 0.159 0.131 0.103 0.070
 0.074

E-11 21 2 11                10 2.68936 0.000 10:54    61
 0.103 0.138 0.199 0.239 0.288 0.320 0.365 0.437 0.485 0.526 0.563 0.592
 0.617 0.634 0.648 0.656 0.625 0.640 0.694 0.713 0.726 0.736 0.742 0.743
 0.740 0.732 0.720 0.661 0.680 0.713 0.718 0.717 0.714 0.706 0.697 0.684
 0.670 0.651 0.585 0.611 0.629 0.626 0.619 0.609 0.595 0.577 0.552 0.527
 0.493 0.417 0.436 0.420 0.395 0.366 0.334 0.299 0.260 0.216 0.170 0.115
 0.123

E-5  31 3 11                10 2.68936 0.000 10:54    61
 0.062 0.087 0.113 0.139 0.161 0.169 0.216 0.243 0.265 0.285 0.302 0.316
 0.326 0.333 0.338 0.336 0.309 0.353 0.364 0.372 0.377 0.380 0.381 0.380
 0.376 0.371 0.357 0.325 0.362 0.366 0.367 0.367 0.366 0.362 0.358 0.351
 0.343 0.324 0.296 0.324 0.324 0.321 0.317 0.310 0.302 0.292 0.278 0.264
 0.234 0.219 0.223 0.211 0.197 0.180 0.162 0.143 0.122 0.097 0.072 0.055
 0.043

J-7  32 4 11                10 2.68936 0.000 10:54    61
 0.109 0.153 0.204 0.254 0.301 0.323 0.399 0.453 0.501 0.542 0.578 0.608
 0.632 0.650 0.652 0.667 0.617 0.668 0.708 0.726 0.738 0.746 0.750 0.750
 0.746 0.738 0.724 0.650 0.699 0.721 0.725 0.727 0.724 0.718 0.709 0.696
 0.679 0.657 0.576 0.619 0.628 0.621 0.613 0.603 0.586 0.569 0.545 0.519
 0.483 0.404 0.434 0.418 0.392 0.364 0.333 0.297 0.257 0.211 0.163 0.109
 0.121
```

FLUX MAP 2-1- 3

```
K-12 41 5 11                30 2.68936 0.000 10:54    61
 0.049 0.082 0.131 0.173 0.211 0.237 0.262 0.322 0.359 0.390 0.419 0.442
 0.461 0.476 0.486 0.492 0.472 0.469 0.518 0.532 0.542 0.549 0.552 0.552
 0.550 0.545 0.536 0.497 0.496 0.529 0.534 0.535 0.534 0.532 0.526 0.518
 0.508 0.494 0.449 0.450 0.469 0.466 0.460 0.453 0.442 0.430 0.412 0.394
 0.369 0.316 0.324 0.315 0.297 0.276 0.253 0.228 0.198 0.156 0.131 0.090
 0.089

D-8  50 6 11                30 2.68936 0.000 10:54    61    -2
 0.054 0.072 0.095 0.130 0.172 0.223 0.254 0.278 0.298 0.315 0.329 0.338
 0.345 0.349 0.337 0.333 0.366 0.375 0.382 0.387 0.389 0.390 0.388 0.385
 0.379 0.351 0.354 0.376 0.379 0.380 0.380 0.377 0.372 0.366 0.358 0.347
 0.311 0.320 0.331 0.328 0.325 0.319 0.312 0.302 0.291 0.278 0.260 0.221
 0.230 0.223 0.210 0.195 0.173 0.159 0.138 0.115 0.090 0.060 0.064 0.041
 0.007
```

FLUX MAP 2-1-29

DATE NOV 14, 1974

APPROXIMATE TIME OF MAP 1430 - 1600

POWER 82.0 PERCENT OF FULL POWER

CONTROL BANK D AT 200 STEPS WITHDRAWN

BORON 882 PPM

PRESSURE 2230 PSIA

RCS T-AV 556 DEGREES F

Table 3.3.3-4 Detailed Listings of Adjusted Movable Detector Response Traces for Flux Map 2-1-29

FLUX MAP 2-1-29

```
J-10  1 1  3                10 0.76856 0.000 14:18     61
 0.087 0.104 0.135 0.164 0.189 0.195 0.248 0.278 0.306 0.329 0.351 0.370
 0.367 0.401 0.413 0.419 0.385 0.448 0.467 0.482 0.494 0.503 0.509 0.511
 0.510 0.507 0.496 0.451 0.510 0.520 0.528 0.533 0.537 0.537 0.535 0.532
 0.526 0.506 0.461 0.513 0.516 0.515 0.512 0.505 0.494 0.481 0.462 0.442
 0.399 0.377 0.386 0.369 0.348 0.323 0.294 0.259 0.222 0.181 0.136 0.103
 0.094

D-10 12 2  3                30 0.76856 0.000 14:18     61     -5
 0.135 0.156 0.186 0.205 0.223 0.240 0.253 0.265 0.276 0.285 0.291 0.278
 0.294 0.319 0.330 0.339 0.345 0.350 0.353 0.354 0.354 0.352 0.323 0.344
 0.362 0.367 0.371 0.372 0.374 0.373 0.371 0.368 0.363 0.325 0.353 0.365
 0.366 0.365 0.362 0.356 0.347 0.337 0.325 0.309 0.264 0.280 0.273 0.260
 0.243 0.224 0.201 0.176 0.146 0.114 0.077 0.086 0.054 0.008 0.003 0.001
 0.001

R-8  23 3  3                10 0.76856 0.001 14:18     61
 0.051 0.066 0.087 0.105 0.120 0.125 0.156 0.173 0.189 0.204 0.216 0.227
 0.237 0.243 0.248 0.248 0.232 0.268 0.279 0.287 0.293 0.298 0.301 0.303
 0.303 0.303 0.293 0.273 0.308 0.314 0.318 0.321 0.322 0.323 0.322 0.318
 0.315 0.299 0.282 0.306 0.308 0.309 0.309 0.307 0.302 0.294 0.284 0.272
 0.241 0.233 0.234 0.223 0.209 0.194 0.176 0.156 0.134 0.109 0.079 0.070
 0.055

J-7  32 4  3                30 0.76856 0.000 14:18     61
 0.049 0.067 0.089 0.111 0.131 0.140 0.169 0.197 0.219 0.238 0.255 0.269
 0.283 0.293 0.301 0.306 0.285 0.313 0.334 0.346 0.355 0.362 0.367 0.371
 0.373 0.372 0.368 0.333 0.363 0.377 0.383 0.387 0.390 0.391 0.390 0.388
 0.383 0.375 0.331 0.362 0.371 0.371 0.370 0.367 0.362 0.354 0.343 0.330
 0.312 0.263 0.286 0.278 0.264 0.248 0.228 0.204 0.178 0.148 0.115 0.077
 0.087

K-12 41 5  3                30 0.76856 0.000 14:18     61
 0.052 0.081 0.134 0.177 0.214 0.242 0.263 0.325 0.363 0.394 0.423 0.447
 0.467 0.484 0.497 0.506 0.492 0.484 0.542 0.559 0.574 0.585 0.593 0.600
 0.602 0.603 0.600 0.559 0.566 0.611 0.621 0.627 0.631 0.634 0.634 0.631
 0.627 0.616 0.567 0.570 0.600 0.602 0.602 0.599 0.592 0.582 0.566 0.548
 0.522 0.453 0.463 0.458 0.434 0.407 0.377 0.340 0.300 0.255 0.203 0.141
 0.135

M-15  2 1  4                10 0.76851 0.000 14:26     61
 0.062 0.066 0.088 0.110 0.128 0.132 0.166 0.188 0.206 0.222 0.238 0.250
 0.261 0.270 0.276 0.279 0.253 0.291 0.304 0.313 0.320 0.327 0.332 0.335
 0.336 0.337 0.334 0.300 0.342 0.350 0.354 0.357 0.359 0.358 0.358 0.354
 0.350 0.340 0.306 0.343 0.345 0.346 0.345 0.342 0.338 0.330 0.320 0.306
 0.284 0.249 0.264 0.253 0.239 0.222 0.204 0.181 0.157 0.130 0.099 0.070
 0.079

J-10  1 2  4                10 0.76851 0.000 14:26     61
 0.136 0.156 0.203 0.250 0.290 0.297 0.376 0.427 0.469 0.505 0.540 0.569
 0.595 0.618 0.636 0.647 0.591 0.687 0.719 0.743 0.762 0.777 0.786 0.789
 0.786 0.783 0.770 0.691 0.785 0.801 0.813 0.823 0.828 0.828 0.826 0.819
 0.809 0.782 0.709 0.790 0.794 0.794 0.790 0.779 0.763 0.743 0.717 0.687
 0.633 0.571 0.597 0.572 0.541 0.502 0.459 0.408 0.350 0.286 0.216 0.157
 0.159
```

FLUX MAP 2-1-29

```
C-5  24 3  4                10 0.76851 0.001 14:26    61
 0.071 0.102 0.136 0.171 0.200 0.210 0.262 0.303 0.335 0.364 0.390 0.411
 0.430 0.445 0.457 0.463 0.426 0.484 0.512 0.529 0.544 0.554 0.562 0.568
 0.570 0.569 0.561 0.502 0.567 0.532 0.590 0.596 0.600 0.601 0.601 0.597
 0.591 0.576 0.507 0.577 0.588 0.591 0.590 0.586 0.578 0.563 0.544 0.520
 0.486 0.415 0.450 0.434 0.412 0.395 0.353 0.317 0.275 0.228 0.174 0.116
 0.127

R-11 33 4  4                10 0.76851 0.000 14:26    61
 0.073 0.096 0.126 0.156 0.179 0.186 0.235 0.262 0.287 0.309 0.330 0.349
 0.363 0.374 0.381 0.380 0.355 0.408 0.424 0.436 0.445 0.452 0.456 0.460
 0.461 0.462 0.449 0.426 0.473 0.482 0.488 0.492 0.494 0.492 0.489 0.485
 0.480 0.452 0.436 0.467 0.467 0.466 0.462 0.454 0.445 0.433 0.420 0.402
 0.362 0.347 0.352 0.337 0.316 0.294 0.268 0.237 0.203 0.155 0.120 0.096
 0.083

F-14 42 5  4                30 0.76851 0.000 14:26    61
 0.075 0.107 0.140 0.172 0.198 0.203 0.257 0.290 0.318 0.342 0.365 0.385
 0.400 0.414 0.423 0.426 0.389 0.448 0.469 0.484 0.495 0.504 0.512 0.518
 0.519 0.519 0.510 0.456 0.521 0.533 0.540 0.545 0.549 0.550 0.549 0.543
 0.536 0.515 0.466 0.523 0.528 0.529 0.527 0.522 0.513 0.499 0.483 0.465
 0.432 0.389 0.414 0.399 0.377 0.350 0.319 0.284 0.244 0.200 0.148 0.103
 0.099

H-2  51 6  4                30 0.76851 0.001 14:26    61    -1
 0.089 0.123 0.157 0.189 0.212 0.225 0.278 0.309 0.336 0.359 0.361 0.398
 0.413 0.426 0.433 0.425 0.416 0.467 0.484 0.495 0.505 0.512 0.517 0.520
 0.520 0.518 0.488 0.489 0.528 0.536 0.542 0.544 0.545 0.545 0.543 0.536
 0.528 0.481 0.505 0.526 0.528 0.526 0.520 0.512 0.501 0.487 0.471 0.449
 0.369 0.404 0.399 0.380 0.356 0.329 0.298 0.261 0.221 0.175 0.120 0.118
 0.079

K-2   3 1  5                10 0.76918 0.000 14:36    51
 0.082 0.119 0.155 0.193 0.225 0.232 0.289 0.330 0.362 0.390 0.417 0.438
 0.457 0.472 0.484 0.489 0.446 0.516 0.540 0.555 0.568 0.578 0.584 0.589
 0.589 0.588 0.580 0.520 0.591 0.607 0.616 0.623 0.628 0.630 0.630 0.627
 0.621 0.602 0.538 0.508 0.615 0.616 0.612 0.606 0.597 0.584 0.566 0.544
 0.505 0.444 0.476 0.457 0.432 0.402 0.367 0.328 0.285 0.234 0.177 0.119
 0.123

A-11 13 2  5                10 0.76918 0.000 14:36    61
 0.065 0.075 0.102 0.130 0.155 0.166 0.196 0.230 0.253 0.273 0.293 0.309
 0.322 0.331 0.338 0.343 0.317 0.357 0.378 0.391 0.402 0.409 0.415 0.418
 0.420 0.422 0.418 0.375 0.421 0.434 0.439 0.443 0.448 0.449 0.448 0.446
 0.442 0.434 0.382 0.425 0.433 0.434 0.433 0.432 0.427 0.419 0.407 0.391
 0.369 0.314 0.335 0.323 0.306 0.285 0.261 0.234 0.205 0.171 0.133 0.087
 0.107

J-10  1 3  5                10 0.76918 0.001 14:36    61
 0.079 0.090 0.116 0.143 0.166 0.171 0.215 0.245 0.268 0.289 0.310 0.327
 0.342 0.355 0.366 0.372 0.340 0.397 0.415 0.428 0.439 0.447 0.452 0.453
 0.452 0.450 0.442 0.400 0.452 0.462 0.469 0.474 0.477 0.478 0.476 0.472
 0.467 0.451 0.409 0.455 0.458 0.458 0.454 0.449 0.439 0.428 0.413 0.396
 0.364 0.328 0.344 0.329 0.311 0.289 0.263 0.234 0.202 0.165 0.126 0.091
 0.094
```

FLUX MAP 2-1-2,

```
B-8  34 4  5                30 0.76913 0.000 14:36    61
 0.048 0.069 0.091 0.113 0.132 0.137 0.171 0.196 0.215 0.233 0.249 0.263
 0.274 0.282 0.288 0.291 0.264 0.303 0.315 0.325 0.333 0.338 0.343 0.346
 0.348 0.349 0.344 0.310 0.352 0.363 0.369 0.372 0.374 0.375 0.373 0.371
 0.366 0.354 0.315 0.355 0.360 0.361 0.359 0.356 0.350 0.343 0.333 0.321
 0.301 0.262 0.252 0.271 0.256 0.237 0.216 0.194 0.169 0.139 0.106 0.071
 0.078

H-4  43 5  5                39 0.76918 0.000 14:36    61
 0.046 0.065 0.087 0.113 0.148 0.194 0.276 0.328 0.366 0.399 0.428 0.451
 0.471 0.486 0.498 0.502 0.459 0.528 0.549 0.563 0.575 0.585 0.591 0.596
 0.599 0.599 0.590 0.531 0.603 0.619 0.629 0.634 0.639 0.640 0.637 0.632
 0.624 0.604 0.538 0.606 0.612 0.613 0.610 0.603 0.592 0.578 0.560 0.537
 0.499 0.438 0.469 0.450 0.427 0.397 0.363 0.324 0.282 0.232 0.176 0.119
 0.123

B-3  52 6  5                10 0.76918 0.001 14:36    61
 0.090 0.117 0.153 0.190 0.221 0.229 0.291 0.328 0.361 0.390 0.417 0.440
 0.459 0.473 0.435 0.497 0.459 0.528 0.549 0.564 0.576 0.583 0.588 0.589
 0.568 0.586 0.565 0.541 0.591 0.599 0.605 0.611 0.613 0.616 0.613 0.610
 0.605 0.569 0.560 0.592 0.593 0.591 0.587 0.579 0.568 0.555 0.540 0.517
 0.456 0.448 0.447 0.425 0.400 0.369 0.334 0.295 0.252 0.204 0.148 0.140
 0.102

L-10  4 1  6                10 0.76976 0.000 14:46    61
 0.089 0.111 0.146 0.178 0.207 0.213 0.269 0.303 0.331 0.358 0.361 0.402
 0.420 0.435 0.446 0.451 0.419 0.483 0.502 0.517 0.530 0.540 0.547 0.552
 0.554 0.552 0.537 0.499 0.555 0.565 0.571 0.577 0.580 0.581 0.578 0.573
 0.566 0.538 0.510 0.556 0.559 0.561 0.559 0.552 0.542 0.528 0.510 0.487
 0.440 0.417 0.424 0.405 0.381 0.356 0.323 0.288 0.246 0.200 0.150 0.111
 0.097

K-6  14 2  6                30 0.76976 0.000 14:46    61
 0.045 0.065 0.086 0.106 0.124 0.129 0.158 0.182 0.201 0.217 0.233 0.245
 0.257 0.265 0.272 0.276 0.252 0.290 0.305 0.315 0.322 0.329 0.335 0.338
 0.339 0.338 0.333 0.299 0.339 0.348 0.353 0.356 0.357 0.357 0.355 0.352
 0.347 0.337 0.297 0.336 0.339 0.340 0.338 0.334 0.328 0.321 0.311 0.299
 0.279 0.243 0.261 0.251 0.238 0.222 0.202 0.180 0.155 0.128 0.097 0.066
 0.069

B-13 25 3  6                 3 0.76976 0.009 14:46    61
 0.104 0.136 0.179 0.215 0.255 0.263 0.330 0.370 0.406 0.441 0.471 0.506
 0.520 0.537 0.555 0.550 0.527 0.590 0.622 0.641 0.653 0.670 0.671 0.675
 0.679 0.678 0.649 0.634 0.693 0.706 0.712 0.717 0.719 0.718 0.719 0.712
 0.702 0.658 0.651 0.691 0.690 0.697 0.686 0.679 0.669 0.655 0.632 0.607
 0.536 0.531 0.528 0.502 0.474 0.439 0.396 0.351 0.290 0.242 0.176 0.168
 0.125

J-10  1 4  6                10 0.76976 0.000 14:46    61
 0.144 0.181 0.232 0.280 0.321 0.332 0.421 0.472 0.515 0.555 0.591 0.623
 0.651 0.674 0.693 0.697 0.669 0.759 0.790 0.813 0.832 0.846 0.854 0.856
 0.854 0.849 0.813 0.706 0.859 0.875 0.887 0.897 0.902 0.902 0.897 0.889
 0.877 0.820 0.808 0.862 0.864 0.862 0.856 0.843 0.824 0.801 0.772 0.738
 0.664 0.643 0.644 0.614 0.578 0.537 0.486 0.430 0.364 0.296 0.220 0.178
 0.190
```

FLUX MAP 2-1-29

```
M-7  44 5  6                30 0.76976 0.000 14:46    61
 0.072 0.069 0.118 0.146 0.172 0.181 0.233 0.267 0.295 0.321 0.343 0.362
 0.378 0.390 0.400 0.403 0.371 0.430 0.448 0.462 0.475 0.486 0.494 0.499
 0.501 0.500 0.499 0.446 0.501 0.510 0.515 0.520 0.523 0.524 0.522 0.519
 0.512 0.491 0.451 0.498 0.501 0.501 0.498 0.492 0.484 0.472 0.457 0.439
 0.402 0.368 0.362 0.365 0.344 0.320 0.292 0.260 0.222 0.183 0.138 0.098
 0.096

L-15 53 6  6                10 0.76976 0.001 14:46    61
 0.123 0.127 0.172 0.215 0.253 0.203 0.325 0.372 0.408 0.444 0.477 0.507
 0.530 0.547 0.558 0.566 0.513 0.592 0.619 0.639 0.657 0.671 0.679 0.685
 0.685 0.683 0.672 0.602 0.681 0.694 0.698 0.703 0.704 0.704 0.702 0.696
 0.688 0.666 0.595 0.557 0.670 0.671 0.670 0.665 0.657 0.643 0.624 0.598
 0.554 0.487 0.518 0.497 0.469 0.438 0.398 0.356 0.306 0.252 0.187 0.132
 0.145

P-4   5 1  7                10 0.76933 0.000 14:55    61    -1
 0.071 0.094 0.116 0.134 0.138 0.178 0.200 0.221 0.239 0.257 0.272 0.284
 0.293 0.301 0.301 0.278 0.321 0.333 0.341 0.348 0.353 0.357 0.360 0.361
 0.362 0.353 0.336 0.373 0.380 0.384 0.386 0.387 0.387 0.386 0.385 0.381
 0.359 0.347 0.374 0.375 0.376 0.374 0.371 0.364 0.355 0.343 0.327 0.286
 0.285 0.285 0.272 0.256 0.237 0.215 0.190 0.161 0.130 0.093 0.084 0.066
 0.019

F-1  15 2  7                10 0.76933 0.000 14:55    61    -2
 0.131 0.160 0.185 0.189 0.240 0.268 0.292 0.314 0.333 0.351 0.366 0.377
 0.387 0.390 0.359 0.416 0.434 0.446 0.457 0.466 0.472 0.475 0.476 0.474
 0.464 0.434 0.482 0.492 0.499 0.503 0.506 0.506 0.503 0.499 0.494 0.472
 0.445 0.484 0.486 0.486 0.483 0.477 0.468 0.457 0.443 0.425 0.378 0.370
 0.373 0.357 0.335 0.309 0.279 0.246 0.211 0.170 0.125 0.109 0.086 0.020
 0.007

H-11 26 3  7                10 0.76933 0.000 14:55    61    -2
 0.121 0.150 0.176 0.184 0.237 0.269 0.295 0.322 0.344 0.363 0.380 0.394
 0.406 0.410 0.380 0.438 0.457 0.470 0.480 0.489 0.495 0.499 0.500 0.499
 0.498 0.449 0.502 0.511 0.516 0.521 0.522 0.522 0.521 0.517 0.512 0.491
 0.460 0.505 0.509 0.510 0.507 0.501 0.491 0.476 0.459 0.439 0.392 0.376
 0.380 0.362 0.340 0.314 0.285 0.251 0.215 0.175 0.132 0.100 0.086 0.023
 0.008

L-13 35 4  7                30 0.76933 0.000 14:55    61    -2
 0.092 0.112 0.129 0.137 0.173 0.195 0.213 0.231 0.246 0.259 0.270 0.279
 0.285 0.284 0.268 0.308 0.322 0.333 0.340 0.347 0.351 0.353 0.355 0.354
 0.340 0.327 0.360 0.366 0.370 0.374 0.374 0.374 0.373 0.370 0.365 0.341
 0.333 0.358 0.360 0.360 0.358 0.354 0.348 0.340 0.328 0.315 0.275 0.275
 0.275 0.262 0.247 0.229 0.208 0.184 0.157 0.126 0.091 0.077 0.056 0.018
 0.003

J-10  1 5  7                30 0.76933 0.000 14:55    61    -2
 0.111 0.136 0.158 0.162 0.206 0.233 0.255 0.277 0.295 0.312 0.326 0.338
 0.349 0.355 0.324 0.376 0.395 0.408 0.418 0.425 0.430 0.431 0.431 0.429
 0.421 0.381 0.431 0.440 0.447 0.453 0.455 0.455 0.454 0.451 0.446 0.438
 0.389 0.434 0.437 0.436 0.433 0.427 0.418 0.407 0.392 0.376 0.341 0.317
 0.326 0.311 0.293 0.272 0.247 0.219 0.188 0.152 0.116 0.085 0.083 0.038
 0.007
```

FLUX MAP 2-1-79

```
N-6  54 6  7                30 0.76933 0.000 14:55    61    -3
 0.138 0.166 0.187 0.201 0.246 0.274 0.297 0.320 0.340 0.356 0.372 0.384
 0.394 0.386 0.385 0.428 0.443 0.455 0.463 0.470 0.474 0.476 0.477 0.475
 0.444 0.463 0.491 0.500 0.507 0.512 0.513 0.512 0.509 0.503 0.493 0.443
 0.470 0.483 0.485 0.434 0.451 0.474 0.464 0.452 0.438 0.419 0.356 0.381
 0.371 0.352 0.329 0.303 0.272 0.237 0.199 0.156 0.108 0.110 0.060 0.012
 0.007

H-6   6 1  8                10 0.76448 0.000 15:04    61
 0.089 0.124 0.163 0.199 0.232 0.241 0.311 0.350 0.384 0.415 0.442 0.465
 0.485 0.501 0.515 0.517 0.489 0.564 0.587 0.603 0.616 0.624 0.630 0.634
 0.634 0.633 0.611 0.579 0.646 0.661 0.670 0.677 0.681 0.682 0.679 0.672
 0.662 0.621 0.595 0.644 0.647 0.645 0.639 0.629 0.615 0.598 0.577 0.552
 0.468 0.484 0.497 0.465 0.437 0.403 0.365 0.323 0.274 0.220 0.159 0.135
 0.099

F-7  16 2  8                10 0.76448 0.000 15:04    61
 0.143 0.135 0.177 0.220 0.263 0.283 0.349 0.400 0.444 0.483 0.516 0.547
 0.572 0.594 0.611 0.622 0.569 0.652 0.683 0.703 0.721 0.734 0.745 0.752
 0.756 0.757 0.750 0.572 0.763 0.786 0.800 0.810 0.815 0.816 0.812 0.804
 0.793 0.769 0.674 0.761 0.768 0.768 0.766 0.760 0.749 0.731 0.704 0.675
 0.625 0.549 0.580 0.555 0.521 0.482 0.439 0.391 0.336 0.277 0.214 0.155
 0.173

N-4  36 4  8                10 0.76448 0.000 15:04    61    -1
 0.095 0.124 0.163 0.201 0.237 0.260 0.337 0.385 0.428 0.468 0.502 0.531
 0.555 0.577 0.593 0.586 0.592 0.653 0.679 0.699 0.717 0.731 0.739 0.746
 0.747 0.746 0.701 0.711 0.761 0.774 0.783 0.791 0.796 0.796 0.793 0.786
 0.774 0.709 0.729 0.761 0.762 0.760 0.753 0.744 0.729 0.710 0.683 0.653
 0.561 0.588 0.577 0.551 0.518 0.478 0.432 0.380 0.320 0.255 0.187 0.180
 0.122

M-13 45 5  8                30 0.76448 0.000 15:04    61
 0.051 0.060 0.081 0.101 0.121 0.127 0.167 0.190 0.212 0.231 0.249 0.263
 0.275 0.286 0.294 0.296 0.280 0.321 0.334 0.344 0.352 0.357 0.361 0.363
 0.363 0.363 0.353 0.333 0.373 0.381 0.386 0.390 0.393 0.393 0.391 0.388
 0.382 0.363 0.349 0.379 0.384 0.386 0.385 0.382 0.374 0.363 0.349 0.333
 0.295 0.294 0.295 0.283 0.267 0.248 0.225 0.198 0.168 0.134 0.095 0.084
 0.067

J-10  1 6  8                30 0.76448 0.001 15:04    61
 0.069 0.083 0.107 0.130 0.151 0.158 0.203 0.226 0.247 0.267 0.284 0.299
 0.312 0.324 0.333 0.333 0.325 0.365 0.379 0.391 0.400 0.407 0.410 0.411
 0.410 0.408 0.387 0.384 0.414 0.421 0.428 0.432 0.434 0.434 0.432 0.428
 0.422 0.386 0.396 0.415 0.415 0.414 0.410 0.404 0.395 0.383 0.368 0.350
 0.300 0.313 0.306 0.292 0.273 0.252 0.227 0.199 0.168 0.133 0.097 0.096
 0.065

D-12  7 1  9                10 0.76321 0.000 15:14    61
 0.042 0.043 0.059 0.077 0.098 0.115 0.141 0.206 0.277 0.323 0.359 0.387
 0.411 0.429 0.445 0.458 0.444 0.461 0.503 0.521 0.535 0.547 0.556 0.562
 0.565 0.566 0.564 0.521 0.545 0.579 0.591 0.599 0.606 0.610 0.610 0.608
 0.603 0.594 0.535 0.564 0.587 0.589 0.587 0.583 0.576 0.564 0.547 0.529
 0.504 0.427 0.456 0.446 0.426 0.401 0.370 0.334 0.293 0.246 0.196 0.135
 0.131
```

FLUX MAP 2-1-29

```
R-6  17 2  9                10 0.76321 0.001 15:14     61
 0.069 0.065 0.114 0.144 0.171 0.193 0.220 0.254 0.280 0.305 0.327 0.346
 0.362 0.374 0.383 0.388 0.360 0.407 0.426 0.443 0.456 0.465 0.472 0.476
 0.476 0.475 0.471 0.421 0.470 0.484 0.491 0.495 0.499 0.501 0.501 0.500
 0.498 0.469 0.428 0.479 0.484 0.483 0.481 0.476 0.468 0.457 0.443 0.427
 0.403 0.346 0.371 0.356 0.336 0.312 0.285 0.256 0.221 0.183 0.142 0.097
 0.122

B-14 37 4  9                10 0.76321 0.000 15:14     61
 0.095 0.109 0.146 0.183 0.218 0.224 0.286 0.323 0.358 0.386 0.418 0.443
 0.466 0.482 0.496 0.504 0.460 0.534 0.559 0.578 0.592 0.603 0.610 0.615
 0.617 0.618 0.610 0.544 0.627 0.647 0.660 0.669 0.674 0.677 0.674 0.669
 0.660 0.639 0.568 0.635 0.643 0.640 0.636 0.630 0.622 0.611 0.594 0.572
 0.531 0.476 0.501 0.482 0.456 0.425 0.387 0.345 0.296 0.242 0.183 0.125
 0.135

J-8  46 5  9                30 0.76321 0.000 15:14     61
 0.070 0.079 0.103 0.129 0.154 0.162 0.209 0.240 0.268 0.293 0.316 0.335
 0.352 0.365 0.376 0.331 0.350 0.402 0.416 0.429 0.439 0.448 0.456 0.462
 0.466 0.467 0.461 0.417 0.471 0.481 0.485 0.488 0.489 0.488 0.485 0.481
 0.477 0.465 0.418 0.466 0.472 0.471 0.467 0.460 0.451 0.439 0.425 0.408
 0.376 0.342 0.356 0.341 0.323 0.300 0.273 0.242 0.207 0.168 0.128 0.090
 0.088

G-12 55 6  9                30 0.76321 0.001 15:14     61
 0.068 0.080 0.105 0.131 0.157 0.166 0.214 0.245 0.272 0.295 0.318 0.337
 0.353 0.367 0.378 0.334 0.357 0.411 0.427 0.437 0.444 0.452 0.462 0.470
 0.473 0.472 0.451 0.422 0.472 0.479 0.484 0.488 0.489 0.490 0.467 0.483
 0.478 0.459 0.427 0.469 0.474 0.473 0.468 0.463 0.454 0.442 0.427 0.409
 0.369 0.354 0.359 0.343 0.324 0.300 0.271 0.240 0.204 0.165 0.125 0.094
 0.073

B-6   8 1 10                10 0.76393 0.000 15:21     61
 0.082 0.118 0.154 0.189 0.218 0.225 0.284 0.319 0.351 0.379 0.404 0.425
 0.444 0.459 0.472 0.475 0.440 0.509 0.531 0.547 0.559 0.569 0.576 0.579
 0.580 0.578 0.561 0.512 0.583 0.598 0.607 0.615 0.617 0.618 0.616 0.609
 0.602 0.574 0.533 0.590 0.595 0.597 0.595 0.589 0.580 0.566 0.546 0.523
 0.468 0.447 0.457 0.438 0.412 0.384 0.350 0.309 0.266 0.216 0.159 0.122
 0.093

H-14 18 2 10                10 0.76393 0.000 15:21     61
 0.058 0.052 0.072 0.093 0.113 0.125 0.143 0.172 0.192 0.211 0.228 0.244
 0.258 0.267 0.275 0.281 0.264 0.287 0.307 0.318 0.327 0.334 0.339 0.341
 0.343 0.344 0.343 0.313 0.339 0.353 0.357 0.360 0.361 0.361 0.361 0.360
 0.357 0.352 0.314 0.343 0.350 0.351 0.350 0.347 0.342 0.335 0.324 0.313
 0.295 0.249 0.268 0.259 0.245 0.229 0.210 0.188 0.164 0.137 0.108 0.074
 0.099

G-5  38 4 10                30 0.76393 0.000 15:21     61
 0.050 0.069 0.091 0.112 0.131 0.136 0.172 0.196 0.216 0.236 0.252 0.266
 0.278 0.288 0.296 0.300 0.277 0.323 0.339 0.349 0.359 0.364 0.368 0.370
 0.371 0.370 0.363 0.326 0.371 0.380 0.385 0.389 0.392 0.392 0.391 0.389
 0.384 0.371 0.333 0.373 0.376 0.376 0.375 0.371 0.365 0.355 0.343 0.329
 0.301 0.274 0.287 0.275 0.260 0.242 0.220 0.196 0.169 0.138 0.104 0.073
 0.067
```

FLUX MAP 2-1-23

```
G-7  47 5 10                30 0.76393 0.000 15:21    61
 0.077 0.111 0.145 0.181 0.211 0.218 0.277 0.315 0.349 0.379 0.405 0.426
 0.445 0.461 0.473 0.473 0.441 0.513 0.537 0.555 0.569 0.579 0.587 0.591
 0.593 0.591 0.577 0.524 0.594 0.607 0.614 0.621 0.624 0.625 0.624 0.618
 0.611 0.587 0.536 0.597 0.602 0.603 0.600 0.594 0.585 0.572 0.554 0.532
 0.481 0.450 0.462 0.440 0.413 0.384 0.350 0.311 0.269 0.220 0.163 0.119
 0.099

A-9  56 6 10                30 0.76393 0.001 15:21    61
 0.050 0.063 0.082 0.101 0.116 0.118 0.148 0.165 0.180 0.194 0.206 0.217
 0.227 0.235 0.241 0.243 0.227 0.263 0.275 0.284 0.290 0.294 0.297 0.298
 0.299 0.296 0.289 0.270 0.302 0.308 0.311 0.314 0.316 0.317 0.315 0.313
 0.310 0.296 0.283 0.305 0.308 0.309 0.307 0.304 0.298 0.290 0.280 0.268
 0.236 0.235 0.234 0.223 0.209 0.193 0.174 0.154 0.131 0.106 0.076 0.069
 0.053

E-9   9 1 11                10 0.76364 0.000 15:31    61
 0.095 0.131 0.170 0.206 0.236 0.248 0.316 0.356 0.390 0.421 0.449 0.474
 0.495 0.511 0.526 0.527 0.501 0.575 0.598 0.615 0.629 0.640 0.647 0.652
 0.656 0.655 0.630 0.606 0.668 0.680 0.689 0.692 0.693 0.691 0.687 0.679
 0.669 0.629 0.609 0.659 0.662 0.662 0.658 0.651 0.638 0.622 0.599 0.572
 0.502 0.502 0.503 0.480 0.450 0.417 0.378 0.333 0.283 0.229 0.164 0.143
 0.102

N-2  19 2 11                10 0.76364 0.001 15:31    61    -1
 0.052 0.071 0.092 0.111 0.122 0.142 0.169 0.189 0.206 0.223 0.238 0.251
 0.261 0.269 0.275 0.264 0.283 0.303 0.315 0.323 0.330 0.333 0.336 0.338
 0.339 0.337 0.307 0.335 0.348 0.352 0.356 0.359 0.360 0.360 0.358 0.355
 0.350 0.311 0.339 0.344 0.343 0.339 0.336 0.331 0.325 0.316 0.305 0.290
 0.247 0.268 0.261 0.248 0.232 0.214 0.191 0.165 0.137 0.107 0.073 0.097
 0.041

D-3  39 4 11                10 0.76364 0.000 15:31    61
 0.093 0.119 0.157 0.195 0.231 0.247 0.323 0.372 0.414 0.455 0.490 0.522
 0.548 0.569 0.588 0.594 0.552 0.633 0.656 0.673 0.691 0.703 0.714 0.723
 0.729 0.731 0.717 0.664 0.746 0.761 0.775 0.782 0.788 0.790 0.788 0.780
 0.770 0.737 0.684 0.751 0.756 0.756 0.754 0.748 0.736 0.719 0.694 0.664
 0.598 0.567 0.572 0.546 0.512 0.475 0.433 0.383 0.327 0.267 0.201 0.156
 0.140

F-8  48 5 11                30 0.76364 0.000 15:31    61
 0.075 0.107 0.141 0.174 0.202 0.210 0.266 0.303 0.333 0.361 0.386 0.409
 0.428 0.442 0.455 0.460 0.422 0.487 0.510 0.524 0.537 0.547 0.554 0.559
 0.563 0.563 0.552 0.496 0.566 0.581 0.589 0.592 0.594 0.593 0.589 0.584
 0.576 0.556 0.501 0.563 0.568 0.568 0.566 0.559 0.549 0.536 0.516 0.494
 0.451 0.411 0.429 0.410 0.385 0.356 0.324 0.287 0.246 0.202 0.150 0.109
 0.098

P-9  57 6 11                30 0.76364 0.001 15:31    61
 0.061 0.076 0.100 0.121 0.139 0.145 0.183 0.204 0.223 0.240 0.255 0.268
 0.279 0.288 0.295 0.297 0.282 0.322 0.335 0.345 0.354 0.361 0.364 0.366
 0.367 0.365 0.351 0.339 0.370 0.375 0.379 0.382 0.383 0.384 0.383 0.382
 0.378 0.353 0.349 0.374 0.377 0.376 0.374 0.368 0.360 0.349 0.337 0.321
 0.278 0.285 0.282 0.268 0.251 0.234 0.212 0.186 0.157 0.125 0.090 0.100
 0.067
```

FLUX MAP 2-1-29

```
H-3  10 1 12                10 0.76402 0.000 15:41    61
 0.085 0.096 0.129 0.160 0.191 0.204 0.256 0.298 0.333 0.363 0.391 0.414
 0.433 0.450 0.462 0.469 0.432 0.487 0.514 0.529 0.542 0.554 0.563 0.570
 0.576 0.578 0.572 0.511 0.572 0.587 0.594 0.600 0.603 0.605 0.602 0.598
 0.592 0.576 0.508 0.568 0.578 0.578 0.578 0.572 0.563 0.549 0.531 0.511
 0.479 0.416 0.447 0.431 0.410 0.385 0.354 0.315 0.274 0.227 0.178 0.120
 0.129

H-13 20 2 12                30 0.76402 0.000 15:41    61
 0.051 0.046 0.061 0.078 0.094 0.106 0.122 0.150 0.169 0.186 0.202 0.215
 0.225 0.234 0.241 0.247 0.238 0.245 0.267 0.275 0.282 0.288 0.293 0.296
 0.299 0.300 0.300 0.260 0.290 0.306 0.309 0.311 0.313 0.314 0.313 0.312
 0.311 0.307 0.279 0.292 0.301 0.301 0.300 0.297 0.293 0.288 0.280 0.271
 0.259 0.220 0.235 0.231 0.220 0.207 0.191 0.171 0.151 0.127 0.102 0.071
 0.071

L-11 40 4 12                30 0.76402 0.000 15:41    61
 0.053 0.073 0.094 0.113 0.129 0.139 0.174 0.196 0.215 0.234 0.250 0.264
 0.276 0.285 0.292 0.289 0.280 0.317 0.329 0.339 0.346 0.351 0.356 0.358
 0.359 0.357 0.342 0.334 0.366 0.373 0.378 0.381 0.383 0.383 0.380 0.378
 0.373 0.350 0.343 0.370 0.372 0.372 0.368 0.364 0.356 0.346 0.333 0.317
 0.278 0.280 0.281 0.268 0.252 0.234 0.212 0.186 0.159 0.127 0.092 0.079
 0.057

C-8  49 5 12                30 0.76402 0.000 15:41    61
 0.083 0.081 0.110 0.139 0.169 0.185 0.221 0.264 0.295 0.322 0.347 0.367
 0.385 0.401 0.416 0.426 0.404 0.435 0.467 0.480 0.493 0.502 0.509 0.514
 0.518 0.519 0.517 0.471 0.511 0.534 0.544 0.552 0.555 0.559 0.558 0.555
 0.549 0.538 0.476 0.520 0.532 0.534 0.534 0.531 0.525 0.516 0.500 0.480
 0.456 0.390 0.421 0.408 0.387 0.362 0.331 0.295 0.257 0.213 0.167 0.112
 0.122

N-8  58 6 12                30 0.76402 0.001 15:41    61
 0.072 0.090 0.119 0.146 0.172 0.180 0.233 0.266 0.294 0.319 0.341 0.360
 0.376 0.388 0.398 0.403 0.373 0.432 0.451 0.465 0.476 0.485 0.492 0.495
 0.498 0.497 0.486 0.446 0.500 0.509 0.516 0.520 0.523 0.523 0.522 0.518
 0.511 0.492 0.460 0.508 0.513 0.516 0.515 0.510 0.500 0.487 0.468 0.446
 0.396 0.385 0.389 0.372 0.351 0.326 0.296 0.261 0.223 0.180 0.134 0.099
 0.080

L-5  11 1 13                10 0.76395 0.000 15:49    61
 0.076 0.102 0.137 0.173 0.206 0.226 0.264 0.315 0.352 0.385 0.415 0.442
 0.465 0.484 0.500 0.511 0.477 0.527 0.562 0.582 0.598 0.610 0.620 0.626
 0.629 0.629 0.623 0.560 0.617 0.642 0.653 0.659 0.663 0.664 0.663 0.657
 0.649 0.635 0.561 0.623 0.638 0.640 0.639 0.636 0.627 0.612 0.592 0.567
 0.536 0.455 0.491 0.479 0.455 0.426 0.391 0.351 0.307 0.258 0.202 0.133
 0.151

E-11 21 2 13                30 0.76395 0.000 15:49    61
 0.041 0.051 0.069 0.088 0.105 0.118 0.132 0.162 0.182 0.199 0.215 0.229
 0.241 0.251 0.259 0.266 0.255 0.268 0.292 0.303 0.311 0.317 0.323 0.327
 0.329 0.330 0.327 0.300 0.317 0.336 0.340 0.343 0.345 0.345 0.344 0.341
 0.338 0.332 0.299 0.322 0.333 0.335 0.335 0.332 0.328 0.321 0.312 0.301
 0.286 0.244 0.256 0.249 0.236 0.221 0.204 0.184 0.162 0.138 0.110 0.075
 0.077
```

FLUX MAP 2-1-29

```
D-8  50 6 14                30 0.76368 0.001 15:54    61
 0.040 0.057 0.075 0.097 0.122 0.146 0.229 0.293 0.333 0.356 0.394 0.417
 0.436 0.452 0.465 0.470 0.430 0.497 0.518 0.534 0.547 0.558 0.565 0.570
 0.572 0.572 0.560 0.509 0.578 0.593 0.602 0.608 0.611 0.611 0.608 0.602
 0.593 0.570 0.515 0.577 0.584 0.584 0.582 0.576 0.565 0.552 0.532 0.510
 0.463 0.435 0.447 0.428 0.403 0.375 0.340 0.302 0.257 0.211 0.154 0.116
 0.095
```

FLUX MAP 2-1-63

DATE DEC 7, 1975

APPROXIMATE TIME OF MAP 1400 - 1500

POWER 96.5 PERCENT OF FULL POWER

CONTROL BANK D AT 219 STEPS WITHDRAWN

BORON 7 PPM

PRESSURE 2256 PSIA

RCS T-AV 557 DEGREES F

Table 3.3.3-5 Detailed Listings of Adjusted Movable Detector Response Traces for Flux Map 2-1-63

FLUX MAP 2-1-63

```
J-10  1 1  1                 3 1.06648 0.001 14:02    61
 0.333 0.342 0.423 0.503 0.553 0.525 0.539 0.680 0.698 0.709 0.710 0.710
 0.698 0.686 0.675 0.645 0.548 0.629 0.638 0.640 0.637 0.633 0.625 0.616
 0.604 0.594 0.565 0.495 0.570 0.580 0.587 0.589 0.589 0.588 0.585 0.582
 0.580 0.555 0.503 0.535 0.600 0.608 0.617 0.623 0.633 0.540 0.544 0.043
 0.611 0.563 0.662 0.680 0.686 0.677 0.657 0.615 0.552 0.469 0.370 0.267
 0.301

D-10 12 2  1                30 1.06648 0.000 14:02    61    +1
 0.115 0.145 0.217 0.272 0.308 0.321 0.327 0.379 0.396 0.404 0.407 0.408
 0.404 0.398 0.391 0.382 0.349 0.331 0.365 0.367 0.366 0.363 0.362 0.356
 0.351 0.346 0.340 0.315 0.295 0.334 0.337 0.341 0.340 0.341 0.340 0.340
 0.338 0.334 0.312 0.307 0.343 0.351 0.357 0.360 0.366 0.368 0.368 0.369
 0.368 0.345 0.342 0.391 0.390 0.391 0.387 0.373 0.352 0.321 0.277 0.218
 0.152

J-7  32 4  1                10 1.06648 0.000 14:02    61
 0.192 0.228 0.281 0.329 0.355 0.334 0.401 0.428 0.439 0.442 0.443 0.441
 0.434 0.423 0.417 0.397 0.335 0.382 0.392 0.392 0.388 0.385 0.378 0.374
 0.369 0.362 0.347 0.300 0.347 0.356 0.358 0.359 0.361 0.361 0.359 0.358
 0.355 0.340 0.298 0.350 0.359 0.365 0.371 0.378 0.381 0.387 0.390 0.392
 0.379 0.343 0.406 0.420 0.423 0.420 0.409 0.386 0.352 0.305 0.243 0.170
 0.195

D-8  50 6  1                10 1.06648 0.002 14:02    61    -1
 0.258 0.397 0.487 0.541 0.508 0.605 0.641 0.658 0.666 0.661 0.654 0.645
 0.531 0.510 0.442 0.514 0.531 0.540 0.541 0.544 0.542 0.540 0.535 0.531
 0.631 0.614 0.587 0.434 0.555 0.567 0.565 0.561 0.556 0.551 0.548 0.540
 0.508 0.439 0.520 0.539 0.548 0.556 0.560 0.562 0.569 0.572 0.574 0.555
 0.499 0.589 0.605 0.508 0.606 0.593 0.563 0.515 0.450 0.365 0.253 0.291
 0.249

H-15  2 1  2                 3 1.06578 0.000 14:11    61
 0.252 0.183 0.232 0.279 0.317 0.317 0.368 0.401 0.419 0.435 0.444 0.445
 0.443 0.438 0.432 0.420 0.364 0.396 0.405 0.408 0.406 0.406 0.405 0.399
 0.397 0.393 0.386 0.335 0.380 0.393 0.396 0.400 0.402 0.401 0.401 0.399
 0.392 0.384 0.332 0.384 0.397 0.401 0.408 0.411 0.416 0.418 0.420 0.419
 0.408 0.358 0.417 0.423 0.423 0.417 0.402 0.381 0.345 0.300 0.243 0.172
 0.215

J-10  1 2  2                30 1.06578 0.000 14:11    61    +1
 0.224 0.152 0.184 0.226 0.261 0.279 0.273 0.326 0.342 0.352 0.356 0.354
 0.352 0.349 0.344 0.336 0.316 0.281 0.317 0.320 0.320 0.318 0.316 0.311
 0.307 0.302 0.296 0.278 0.256 0.288 0.291 0.294 0.296 0.297 0.295 0.295
 0.293 0.291 0.276 0.258 0.294 0.302 0.307 0.310 0.314 0.317 0.322 0.322
 0.322 0.301 0.302 0.335 0.342 0.345 0.340 0.329 0.307 0.274 0.231 0.181
 0.135

R-11 33 4  2                 3 1.06578 0.001 14:11    61
 0.299 0.277 0.355 0.419 0.468 0.449 0.542 0.579 0.599 0.619 0.630 0.629
 0.629 0.624 0.613 0.588 0.506 0.573 0.583 0.584 0.582 0.581 0.574 0.567
 0.560 0.554 0.535 0.473 0.543 0.550 0.553 0.561 0.559 0.559 0.555 0.554
 0.549 0.534 0.475 0.543 0.554 0.560 0.570 0.569 0.575 0.576 0.580 0.578
 0.552 0.524 0.584 0.592 0.586 0.574 0.548 0.515 0.471 0.418 0.323 0.239
 0.282
```

FLUX MAP 2-1-63

```
H-2  51 6  2                10 1.06578 0.001 14:11    61
 0.226 0.299 0.369 0.423 0.453 0.437 0.528 0.560 0.576 0.586 0.590 0.588
 0.584 0.577 0.564 0.534 0.472 0.533 0.538 0.539 0.533 0.531 0.526 0.522
 0.519 0.509 0.481 0.441 0.498 0.510 0.513 0.515 0.517 0.516 0.516 0.513
 0.510 0.481 0.453 0.516 0.532 0.539 0.542 0.545 0.548 0.547 0.552 0.552
 0.508 0.515 0.569 0.578 0.575 0.566 0.544 0.512 0.459 0.392 0.302 0.235
 0.243

K-2   3 1  2                 3 1.06645 0.001 14:17    61
 0.257 0.323 0.411 0.438 0.548 0.537 0.611 0.675 0.700 0.723 0.728 0.732
 0.730 0.719 0.709 0.690 0.599 0.640 0.668 0.671 0.667 0.659 0.656 0.651
 0.642 0.636 0.624 0.540 0.599 0.623 0.632 0.634 0.638 0.638 0.640 0.637
 0.640 0.625 0.539 0.521 0.656 0.666 0.676 0.682 0.689 0.693 0.693 0.691
 0.677 0.581 0.681 0.702 0.703 0.697 0.676 0.643 0.597 0.532 0.448 0.312
 0.340

A-11 13 2  3                10 1.06645 0.000 14:17    61
 0.337 0.228 0.283 0.345 0.395 0.402 0.442 0.499 0.528 0.540 0.543 0.548
 0.548 0.538 0.527 0.513 0.462 0.467 0.500 0.500 0.504 0.500 0.503 0.496
 0.485 0.482 0.473 0.433 0.444 0.473 0.479 0.477 0.481 0.484 0.483 0.484
 0.478 0.472 0.431 0.447 0.482 0.493 0.502 0.510 0.518 0.524 0.525 0.522
 0.519 0.460 0.496 0.518 0.519 0.518 0.502 0.477 0.448 0.406 0.346 0.260
 0.213

J-10  1 4  3                10 1.06645 0.000 14:17    61
 0.162 0.192 0.238 0.274 0.293 0.285 0.343 0.362 0.370 0.373 0.374 0.373
 0.367 0.361 0.354 0.333 0.296 0.335 0.339 0.337 0.335 0.332 0.329 0.324
 0.318 0.312 0.293 0.253 0.303 0.308 0.310 0.311 0.311 0.311 0.309 0.308
 0.306 0.287 0.274 0.310 0.316 0.324 0.327 0.332 0.336 0.338 0.340 0.339
 0.314 0.322 0.353 0.361 0.363 0.357 0.344 0.320 0.286 0.241 0.188 0.143
 0.153

B-3  52 6  3                 3 1.06645 0.008 14:17    61    -1
 0.340 0.433 0.535 0.621 0.656 0.691 0.797 0.846 0.876 0.900 0.893 0.909
 0.901 0.885 0.867 0.804 0.783 0.840 0.851 0.841 0.840 0.828 0.828 0.816
 0.799 0.785 0.727 0.717 0.772 0.772 0.779 0.782 0.789 0.789 0.790 0.790
 0.785 0.721 0.746 0.795 0.804 0.814 0.625 0.826 0.836 0.841 0.850 0.845
 0.760 0.805 0.838 0.836 0.827 0.805 0.764 0.705 0.630 0.538 0.414 0.377
 0.360

L-10  4 1  4                 3 1.06774 0.001 14:23    61
 0.357 0.358 0.448 0.525 0.573 0.548 0.662 0.701 0.723 0.723 0.728 0.729
 0.720 0.709 0.692 0.564 0.561 0.641 0.645 0.644 0.642 0.639 0.637 0.630
 0.622 0.609 0.583 0.503 0.582 0.592 0.591 0.597 0.601 0.601 0.601 0.600
 0.596 0.572 0.514 0.598 0.618 0.630 0.641 0.646 0.653 0.658 0.662 0.660
 0.621 0.604 0.678 0.691 0.698 0.691 0.669 0.629 0.567 0.483 0.381 0.271
 0.288

K-6  14 2  4                30 1.06774 0.000 14:23    61
 0.165 0.204 0.254 0.298 0.329 0.313 0.366 0.394 0.406 0.412 0.416 0.413
 0.408 0.402 0.393 0.379 0.324 0.355 0.366 0.367 0.366 0.362 0.362 0.359
 0.354 0.348 0.339 0.291 0.324 0.339 0.342 0.342 0.341 0.339 0.338 0.338
 0.337 0.331 0.285 0.327 0.347 0.356 0.361 0.366 0.370 0.373 0.374 0.372
 0.366 0.317 0.373 0.391 0.393 0.391 0.382 0.365 0.338 0.300 0.252 0.181
 0.184
```

FLUX MAP 2-1-63

```
B-8  34 4  4                10 1.06774 0.000 14:23    61
 0.153 0.195 0.244 0.286 0.311 0.294 0.358 0.381 0.396 0.401 0.407 0.406
 0.402 0.396 0.389 0.368 0.314 0.361 0.364 0.365 0.362 0.361 0.358 0.355
 0.351 0.346 0.333 0.293 0.342 0.351 0.352 0.353 0.351 0.353 0.353 0.350
 0.346 0.329 0.298 0.345 0.355 0.361 0.366 0.369 0.374 0.374 0.376 0.376
 0.349 0.343 0.384 0.368 0.382 0.370 0.356 0.336 0.306 0.265 0.210 0.157
 0.165

J-10  1 6  4                10 1.06774 0.001 14:23    61    -1
 0.257 0.326 0.387 0.430 0.411 0.488 0.530 0.545 0.554 0.556 0.555 0.549
 0.541 0.533 0.515 0.439 0.488 0.504 0.501 0.499 0.497 0.491 0.484 0.476
 0.469 0.453 0.386 0.442 0.457 0.460 0.461 0.463 0.464 0.462 0.461 0.459
 0.447 0.385 0.452 0.470 0.478 0.484 0.489 0.495 0.501 0.504 0.505 0.491
 0.444 0.517 0.533 0.537 0.533 0.519 0.490 0.442 0.379 0.303 0.216 0.253
 0.121

H-6   6 1  5                 3 1.06681 0.001 14:30    61
 0.344 0.408 0.515 0.503 0.660 0.622 0.733 0.790 0.809 0.819 0.825 0.815
 0.810 0.791 0.773 0.744 0.626 0.721 0.735 0.730 0.723 0.714 0.707 0.697
 0.689 0.678 0.644 0.559 0.649 0.663 0.663 0.667 0.669 0.669 0.671 0.668
 0.662 0.638 0.563 0.555 0.676 0.685 0.694 0.700 0.704 0.712 0.720 0.726
 0.683 0.669 0.762 0.778 0.782 0.772 0.746 0.698 0.630 0.540 0.426 0.317
 0.334

F-1  15 2  5                10 1.06691 0.000 14:30    61    +1
 0.377 0.259 0.297 0.373 0.432 0.468 0.458 0.553 0.582 0.600 0.618 0.624
 0.629 0.625 0.619 0.607 0.564 0.538 0.587 0.588 0.589 0.584 0.587 0.584
 0.582 0.574 0.563 0.524 0.508 0.555 0.564 0.568 0.572 0.568 0.571 0.568
 0.568 0.566 0.528 0.515 0.567 0.578 0.582 0.586 0.591 0.595 0.597 0.601
 0.601 0.552 0.577 0.620 0.624 0.616 0.596 0.566 0.522 0.465 0.400 0.310
 0.247

L-13 35 4  5                10 1.06681 0.000 14:30    61    -1
 0.165 0.216 0.267 0.309 0.329 0.323 0.385 0.407 0.418 0.421 0.423 0.423
 0.417 0.413 0.403 0.379 0.354 0.388 0.390 0.389 0.386 0.384 0.382 0.379
 0.374 0.366 0.331 0.336 0.363 0.368 0.368 0.369 0.369 0.370 0.369 0.369
 0.361 0.324 0.345 0.367 0.376 0.379 0.385 0.387 0.389 0.393 0.394 0.390
 0.339 0.383 0.402 0.405 0.401 0.392 0.375 0.351 0.318 0.266 0.195 0.188
 0.197

L-15 53 6  5                 3 1.06681 0.009 14:30    61    -1
 0.378 0.459 0.566 0.657 0.691 0.725 0.831 0.875 0.906 0.922 0.940 0.947
 0.936 0.928 0.904 0.841 0.829 0.872 0.878 0.883 0.879 0.874 0.868 0.859
 0.843 0.825 0.733 0.786 0.813 0.815 0.816 0.814 0.814 0.816 0.814 0.811
 0.796 0.711 0.785 0.818 0.834 0.842 0.859 0.869 0.875 0.880 0.874 0.864
 0.748 0.857 0.803 0.887 0.873 0.849 0.809 0.750 0.671 0.551 0.394 0.493
 0.466

F-7  16 2  6                30 1.06681 0.000 14:40    61
 0.194 0.166 0.209 0.247 0.277 0.268 0.316 0.342 0.355 0.362 0.360 0.358
 0.354 0.350 0.343 0.331 0.285 0.310 0.319 0.319 0.318 0.317 0.314 0.310
 0.305 0.300 0.291 0.252 0.281 0.293 0.295 0.296 0.298 0.299 0.299 0.298
 0.297 0.292 0.252 0.283 0.299 0.306 0.311 0.315 0.319 0.322 0.325 0.326
 0.320 0.279 0.325 0.336 0.336 0.330 0.319 0.303 0.278 0.244 0.202 0.146
 0.157
```

FLUX MAP 2-1-63

```
N-4  36 4  6                10 1.06681 0.000 14:40    61
 0.125 0.152 0.201 0.237 0.260 0.259 0.314 0.334 0.347 0.354 0.357 0.359
 0.355 0.346 0.342 0.323 0.293 0.328 0.333 0.332 0.333 0.330 0.328 0.324
 0.319 0.312 0.291 0.273 0.305 0.310 0.314 0.316 0.319 0.321 0.320 0.319
 0.315 0.292 0.287 0.316 0.323 0.328 0.332 0.335 0.337 0.340 0.340 0.339
 0.301 0.328 0.347 0.350 0.346 0.336 0.321 0.296 0.262 0.213 0.167 0.141
 0.139

N-6  54 6  6                10 1.06681 0.001 14:40    61    -1
 0.303 0.376 0.436 0.458 0.448 0.529 0.552 0.565 0.573 0.579 0.576 0.572
 0.561 0.549 0.520 0.466 0.526 0.530 0.530 0.524 0.517 0.508 0.502 0.498
 0.490 0.463 0.427 0.434 0.493 0.497 0.498 0.499 0.498 0.498 0.493 0.487
 0.458 0.435 0.488 0.500 0.509 0.516 0.521 0.526 0.528 0.533 0.533 0.486
 0.515 0.562 0.568 0.566 0.560 0.536 0.501 0.449 0.382 0.293 0.218 0.223
 0.062

R-6   8 1  7                 3 1.06633 0.001 14:47    61
 0.269 0.349 0.442 0.509 0.558 0.530 0.641 0.684 0.704 0.721 0.729 0.727
 0.724 0.717 0.705 0.677 0.535 0.568 0.678 0.675 0.673 0.672 0.664 0.659
 0.649 0.638 0.612 0.524 0.615 0.633 0.639 0.647 0.645 0.648 0.645 0.643
 0.635 0.608 0.536 0.628 0.651 0.662 0.669 0.679 0.685 0.689 0.693 0.688
 0.652 0.590 0.691 0.709 0.706 0.701 0.678 0.638 0.583 0.502 0.398 0.286
 0.319

R-6  17 2  7                10 1.06633 0.000 14:47    61
 0.316 0.272 0.352 0.415 0.468 0.455 0.545 0.595 0.617 0.637 0.649 0.648
 0.642 0.638 0.630 0.509 0.520 0.588 0.503 0.607 0.605 0.604 0.599 0.597
 0.589 0.581 0.562 0.491 0.547 0.563 0.565 0.567 0.568 0.572 0.569 0.571
 0.568 0.561 0.486 0.355 0.572 0.579 0.589 0.593 0.597 0.603 0.602 0.605
 0.598 0.522 0.595 0.510 0.607 0.596 0.570 0.539 0.501 0.413 0.370 0.265
 0.302

D-14 37 4  7                 3 1.06633 0.001 14:47    61
 0.435 0.361 0.490 0.584 0.654 0.628 0.758 0.819 0.848 0.869 0.887 0.888
 0.887 0.872 0.864 0.835 0.712 0.809 0.824 0.820 0.816 0.811 0.800 0.793
 0.786 0.778 0.759 0.649 0.761 0.783 0.792 0.798 0.801 0.807 0.800 0.800
 0.794 0.765 0.665 0.771 0.792 0.803 0.817 0.822 0.832 0.840 0.847 0.848
 0.819 0.729 0.850 0.868 0.864 0.853 0.824 0.773 0.706 0.611 0.490 0.337
 0.429

G-12 55 6  7                10 1.06633 0.001 14:47    61    -1
 0.270 0.340 0.407 0.452 0.436 0.524 0.559 0.577 0.583 0.589 0.580 0.574
 0.565 0.556 0.534 0.456 0.510 0.519 0.513 0.503 0.498 0.499 0.499 0.497
 0.490 0.473 0.408 0.464 0.475 0.477 0.477 0.478 0.478 0.478 0.474 0.475
 0.461 0.404 0.470 0.486 0.491 0.494 0.501 0.504 0.507 0.512 0.516 0.501
 0.444 0.527 0.548 0.554 0.549 0.531 0.503 0.458 0.399 0.320 0.224 0.253
 0.124

N-14 18 2  8                10 1.06647 0.000 14:53    61
 0.253 0.191 0.253 0.313 0.361 0.376 0.414 0.466 0.497 0.511 0.520 0.526
 0.525 0.523 0.516 0.500 0.442 0.461 0.485 0.483 0.481 0.480 0.476 0.474
 0.468 0.459 0.452 0.396 0.436 0.453 0.453 0.453 0.453 0.449 0.449 0.450
 0.450 0.443 0.396 0.445 0.463 0.473 0.482 0.490 0.496 0.500 0.498 0.493
 0.478 0.413 0.469 0.477 0.477 0.469 0.451 0.425 0.389 0.345 0.287 0.210
 0.264
```

FLUX MAP 2-1-63

```
G-5  38 4  8                10 1.06647 0.000 14:53    61
 0.189 0.230 0.283 0.325 0.348 0.330 0.399 0.419 0.426 0.432 0.431 0.427
 0.420 0.411 0.403 0.361 0.338 0.382 0.384 0.383 0.380 0.376 0.372 0.367
 0.363 0.354 0.325 0.318 0.346 0.351 0.353 0.354 0.356 0.355 0.354 0.355
 0.350 0.316 0.323 0.352 0.360 0.366 0.371 0.377 0.381 0.384 0.386 0.384
 0.337 0.378 0.405 0.410 0.410 0.403 0.389 0.364 0.327 0.276 0.202 0.183
 0.195

A-9  56 6  8                10 1.06647 0.001 14:53    61    -1
 0.174 0.219 0.258 0.281 0.265 0.323 0.341 0.352 0.361 0.365 0.366 0.366
 0.362 0.358 0.345 0.302 0.347 0.351 0.355 0.353 0.351 0.349 0.342 0.336
 0.329 0.308 0.292 0.323 0.325 0.323 0.331 0.334 0.334 0.336 0.333 0.329
 0.306 0.300 0.332 0.342 0.346 0.351 0.356 0.356 0.358 0.360 0.357 0.320
 0.342 0.361 0.362 0.361 0.351 0.336 0.314 0.280 0.237 0.178 0.149 0.169
 0.066

N-2  19 2  9                10 1.06708 0.000 15:00    61    +1
 0.262 0.193 0.250 0.312 0.359 0.376 0.405 0.463 0.488 0.504 0.518 0.522
 0.526 0.518 0.512 0.490 0.466 0.453 0.484 0.486 0.487 0.483 0.475 0.469
 0.463 0.460 0.456 0.423 0.416 0.450 0.454 0.459 0.463 0.465 0.464 0.464
 0.458 0.452 0.423 0.422 0.454 0.459 0.458 0.460 0.466 0.472 0.473 0.478
 0.477 0.444 0.453 0.494 0.499 0.493 0.485 0.461 0.427 0.377 0.320 0.247
 0.205

D-3  39 4  9                10 1.06708 0.001 15:00    61
 0.144 0.140 0.181 0.220 0.251 0.247 0.302 0.328 0.345 0.353 0.359 0.360
 0.359 0.353 0.346 0.335 0.289 0.322 0.328 0.325 0.325 0.322 0.320 0.318
 0.316 0.314 0.306 0.264 0.303 0.310 0.313 0.317 0.316 0.317 0.318 0.316
 0.313 0.305 0.265 0.307 0.314 0.321 0.325 0.330 0.332 0.336 0.340 0.338
 0.329 0.289 0.335 0.339 0.333 0.334 0.323 0.302 0.273 0.237 0.191 0.136
 0.160

P-9  57 6  9                10 1.06708 0.001 15:00    61    -1
 0.207 0.265 0.314 0.351 0.340 0.414 0.444 0.460 0.471 0.475 0.477 0.472
 0.465 0.459 0.447 0.396 0.439 0.447 0.451 0.455 0.453 0.451 0.445 0.438
 0.431 0.414 0.359 0.412 0.422 0.422 0.423 0.422 0.422 0.420 0.421 0.420
 0.411 0.357 0.421 0.437 0.449 0.453 0.455 0.456 0.456 0.457 0.458 0.447
 0.396 0.464 0.477 0.480 0.474 0.461 0.433 0.394 0.340 0.270 0.189 0.232
 0.119

L-5  11 1 10                 3 1.07069 0.001 15:06    61
 0.386 0.355 0.461 0.557 0.631 0.652 0.669 0.779 0.816 0.838 0.842 0.842
 0.836 0.824 0.806 0.786 0.710 0.684 0.747 0.747 0.745 0.735 0.732 0.725
 0.716 0.704 0.692 0.633 0.627 0.684 0.691 0.695 0.700 0.699 0.697 0.693
 0.691 0.681 0.612 0.634 0.693 0.708 0.719 0.736 0.744 0.754 0.759 0.759
 0.752 0.670 0.724 0.782 0.792 0.791 0.772 0.737 0.689 0.627 0.534 0.395
 0.347

H-13 20 2 10                30 1.07069 0.000 15:06    61
 0.172 0.175 0.218 0.257 0.284 0.275 0.327 0.348 0.359 0.365 0.365 0.364
 0.359 0.352 0.343 0.331 0.282 0.316 0.321 0.320 0.317 0.314 0.311 0.309
 0.306 0.305 0.299 0.258 0.294 0.301 0.300 0.299 0.300 0.301 0.300 0.300
 0.299 0.294 0.254 0.295 0.303 0.305 0.309 0.311 0.314 0.317 0.322 0.325
 0.318 0.278 0.328 0.340 0.341 0.338 0.330 0.317 0.291 0.260 0.218 0.155
 0.168
```

FLUX MAP 2-1-63

L-11 40 4 10 10 1.07069 0.000 15:06 61
0.189 0.199 0.254 0.302 0.338 0.333 0.372 0.413 0.429 0.441 0.443 0.445
0.441 0.433 0.424 0.410 0.357 0.374 0.394 0.394 0.393 0.389 0.385 0.383
0.376 0.369 0.359 0.314 0.344 0.361 0.362 0.365 0.367 0.366 0.364 0.362
0.362 0.356 0.310 0.352 0.373 0.380 0.386 0.390 0.392 0.394 0.398 0.400
0.394 0.340 0.398 0.418 0.421 0.420 0.409 0.392 0.361 0.324 0.271 0.190
0.196

N-9 58 6 10 10 1.07069 0.001 15:06 61 -1
0.284 0.356 0.423 0.466 0.447 0.532 0.568 0.582 0.588 0.590 0.581 0.575
0.565 0.551 0.531 0.455 0.510 0.522 0.523 0.522 0.521 0.515 0.510 0.505
0.496 0.454 0.413 0.475 0.486 0.486 0.487 0.487 0.490 0.490 0.467 0.487
0.475 0.414 0.469 0.510 0.521 0.529 0.536 0.544 0.543 0.541 0.541 0.523
0.459 0.544 0.560 0.562 0.556 0.545 0.517 0.476 0.415 0.342 0.235 0.252
0.138

H-3 10 1 11 10 1.06804 0.000 15:13 61
0.127 0.101 0.126 0.150 0.169 0.166 0.190 0.206 0.214 0.219 0.218 0.217
0.215 0.212 0.206 0.199 0.172 0.185 0.191 0.191 0.189 0.189 0.189 0.186
0.186 0.184 0.180 0.156 0.173 0.179 0.180 0.181 0.182 0.182 0.182 0.181
0.180 0.177 0.152 0.173 0.181 0.183 0.186 0.189 0.191 0.192 0.192 0.193
0.190 0.166 0.197 0.204 0.205 0.205 0.200 0.190 0.175 0.154 0.128 0.089
0.096

E-11 21 2 11 30 1.06804 0.000 15:13 61 +1
0.193 0.181 0.233 0.279 0.315 0.325 0.336 0.384 0.401 0.412 0.415 0.413
0.411 0.407 0.398 0.388 0.354 0.336 0.368 0.368 0.366 0.362 0.359 0.356
0.355 0.350 0.343 0.317 0.309 0.341 0.346 0.347 0.347 0.346 0.342 0.341
0.339 0.334 0.314 0.311 0.348 0.356 0.360 0.365 0.371 0.373 0.377 0.380
0.376 0.339 0.359 0.386 0.389 0.385 0.374 0.361 0.341 0.311 0.272 0.208
0.167

FLUX MAP 2-1-65

DATE JAN 4, 1977

APPROXIMATE TIME OF MAP 0900 - 1200

POWER 72.5 PERCENT OF FULL POWER

CONTROL BANK D AT 219 STEPS WITHDRAWN

BORON 8 PPM

PRESSURE 2258 PSIA

RCS T-AV 553 DEGREES F

Table 3.3.3-6 Detailed Listings of Adjusted Movable Detector Response Traces for Flux Map 2-1-65

FLUX MAP 2-1-65

```
J-10  1 1 16                30 0.81141 0.000  9:03    61    -1
 0.212 0.269 0.315 0.347 0.328 0.387 0.411 0.418 0.423 0.421 0.417 0.409
 0.401 0.392 0.377 0.319 0.354 0.363 0.360 0.358 0.353 0.347 0.342 0.334
 0.326 0.315 0.270 0.307 0.313 0.315 0.316 0.317 0.317 0.314 0.314 0.312
 0.306 0.262 0.305 0.318 0.323 0.326 0.330 0.333 0.336 0.339 0.339 0.333
 0.294 0.345 0.356 0.360 0.359 0.351 0.333 0.302 0.262 0.212 0.150 0.176
 0.091

D-10 12 2 16                30 0.81141 0.000  9:03    61    +1
 0.164 0.213 0.317 0.393 0.443 0.454 0.460 0.530 0.551 0.556 0.558 0.555
 0.548 0.536 0.524 0.510 0.465 0.435 0.477 0.479 0.476 0.457 0.460 0.454
 0.445 0.439 0.428 0.396 0.374 0.415 0.420 0.422 0.424 0.422 0.419 0.416
 0.412 0.408 0.382 0.370 0.417 0.426 0.432 0.437 0.442 0.445 0.444 0.443
 0.444 0.414 0.412 0.451 0.470 0.472 0.464 0.448 0.420 0.384 0.329 0.255
 0.199

K-12 41 5 16               100 0.81141 0.000  9:03    61    +1
 0.084 0.087 0.137 0.186 0.217 0.238 0.223 0.263 0.282 0.289 0.291 0.290
 0.287 0.283 0.277 0.270 0.258 0.219 0.241 0.247 0.245 0.242 0.239 0.235
 0.232 0.228 0.225 0.219 0.188 0.207 0.216 0.217 0.216 0.216 0.217 0.217
 0.216 0.215 0.211 0.165 0.203 0.213 0.217 0.218 0.221 0.224 0.226 0.228
 0.230 0.229 0.203 0.223 0.238 0.240 0.239 0.235 0.226 0.212 0.191 0.163
 0.123

D-8  50 6 16                10 0.81141 0.001  9:03    61    -1
 0.301 0.453 0.556 0.512 0.571 0.679 0.713 0.724 0.728 0.720 0.704 0.691
 0.669 0.646 0.611 0.513 0.574 0.583 0.575 0.570 0.563 0.554 0.547 0.541
 0.528 0.508 0.435 0.508 0.526 0.528 0.530 0.531 0.531 0.527 0.520 0.514
 0.493 0.422 0.501 0.518 0.528 0.532 0.535 0.541 0.544 0.549 0.551 0.531
 0.477 0.563 0.560 0.534 0.560 0.569 0.537 0.487 0.427 0.343 0.241 0.271
 0.215

H-15  2 1 17                30 0.81067 0.000  9:10    61    -1
 0.117 0.149 0.181 0.204 0.202 0.233 0.256 0.265 0.272 0.276 0.277 0.275
 0.270 0.264 0.255 0.222 0.241 0.244 0.242 0.240 0.239 0.237 0.234 0.232
 0.228 0.223 0.193 0.219 0.226 0.227 0.228 0.228 0.227 0.226 0.224 0.220
 0.216 0.186 0.214 0.220 0.222 0.224 0.227 0.229 0.231 0.231 0.230 0.225
 0.197 0.229 0.234 0.234 0.230 0.223 0.210 0.192 0.168 0.137 0.096 0.118
 0.065

J-10  1 2 17                30 0.81067 0.000  9:10    61
 0.310 0.220 0.275 0.335 0.361 0.393 0.403 0.463 0.479 0.487 0.488 0.483
 0.475 0.465 0.455 0.443 0.395 0.389 0.415 0.414 0.411 0.407 0.399 0.395
 0.386 0.378 0.368 0.331 0.334 0.358 0.362 0.364 0.363 0.362 0.361 0.360
 0.358 0.353 0.317 0.330 0.359 0.365 0.371 0.375 0.378 0.383 0.387 0.387
 0.385 0.341 0.382 0.405 0.412 0.413 0.405 0.390 0.361 0.318 0.265 0.203
 0.173

F-14 42 5 17               100 0.81067 0.000  9:10    61
 0.098 0.115 0.149 0.177 0.199 0.200 0.214 0.241 0.252 0.257 0.261 0.262
 0.260 0.256 0.249 0.242 0.216 0.215 0.230 0.231 0.229 0.226 0.224 0.221
 0.218 0.215 0.209 0.189 0.186 0.203 0.205 0.204 0.204 0.204 0.205 0.203
 0.204 0.200 0.185 0.179 0.200 0.204 0.207 0.209 0.211 0.211 0.212 0.213
 0.211 0.195 0.202 0.221 0.225 0.224 0.219 0.211 0.198 0.179 0.184 0.122
 0.091
```

FLUX MAP 2-1-65

H-2 51 6 17 10 0.81067 0.001 9:10 61 -1

0.271	0.359	0.438	0.500	0.519	0.517	0.611	0.638	0.651	0.655	0.655	0.646
0.637	0.628	0.611	0.559	0.536	0.576	0.578	0.572	0.567	0.559	0.552	0.542
0.535	0.521	0.469	0.475	0.513	0.521	0.520	0.518	0.516	0.516	0.513	0.509
0.502	0.451	0.478	0.515	0.525	0.530	0.535	0.535	0.540	0.539	0.542	0.533
0.469	0.531	0.559	0.563	0.559	0.546	0.524	0.486	0.430	0.362	0.261	0.250
0.265											

K-2 3 1 18 30 0.81155 0.000 9:18 61 -1

0.210	0.270	0.318	0.350	0.339	0.385	0.418	0.432	0.438	0.439	0.441	0.435
0.429	0.417	0.404	0.350	0.383	0.395	0.392	0.387	0.385	0.379	0.375	0.368
0.365	0.351	0.303	0.342	0.351	0.352	0.351	0.351	0.352	0.353	0.350	0.349
0.340	0.294	0.345	0.357	0.363	0.367	0.367	0.372	0.372	0.373	0.372	0.362
0.314	0.368	0.377	0.377	0.374	0.363	0.346	0.322	0.289	0.241	0.169	0.189
0.184											

A-11 13 2 18 10 0.81155 0.001 9:18 61

0.485	0.330	0.415	0.501	0.567	0.572	0.633	0.706	0.738	0.753	0.764	0.762
0.751	0.737	0.717	0.694	0.601	0.644	0.669	0.670	0.669	0.660	0.654	0.641
0.634	0.620	0.609	0.534	0.581	0.606	0.606	0.604	0.603	0.610	0.609	0.605
0.598	0.587	0.516	0.574	0.598	0.610	0.616	0.628	0.635	0.643	0.647	0.640
0.634	0.550	0.613	0.641	0.638	0.632	0.614	0.585	0.544	0.488	0.410	0.298
0.283											

J-10 1 5 18 30 0.81155 0.000 9:18 61 +1

0.498	0.383	0.481	0.579	0.650	0.660	0.690	0.780	0.808	0.819	0.822	0.813
0.800	0.787	0.770	0.747	0.665	0.659	0.701	0.700	0.694	0.637	0.677	0.668
0.650	0.638	0.620	0.565	0.556	0.602	0.608	0.611	0.612	0.609	0.606	0.605
0.604	0.595	0.548	0.544	0.603	0.616	0.626	0.631	0.640	0.645	0.652	0.653
0.654	0.614	0.603	0.680	0.694	0.700	0.591	0.669	0.630	0.571	0.487	0.385
0.276											

B-3 52 6 18 10 0.81155 0.001 9:18 61 -1

0.118	0.152	0.190	0.218	0.227	0.242	0.277	0.293	0.300	0.305	0.306	0.305
0.300	0.291	0.284	0.256	0.263	0.275	0.273	0.272	0.267	0.264	0.259	0.254
0.251	0.244	0.216	0.232	0.239	0.238	0.239	0.239	0.238	0.241	0.239	0.238
0.236	0.209	0.232	0.240	0.243	0.244	0.247	0.249	0.250	0.251	0.253	0.250
0.217	0.245	0.249	0.250	0.247	0.237	0.224	0.207	0.183	0.154	0.113	0.125
0.096											

L-10 4 1 19 30 0.81073 0.000 9:26 61 -1

0.221	0.274	0.325	0.358	0.343	0.395	0.424	0.434	0.435	0.434	0.431	0.423
0.414	0.404	0.389	0.333	0.362	0.372	0.368	0.365	0.361	0.356	0.351	0.346
0.340	0.331	0.284	0.315	0.323	0.323	0.325	0.325	0.325	0.324	0.324	0.323
0.316	0.273	0.315	0.330	0.335	0.340	0.342	0.345	0.347	0.348	0.350	0.344
0.302	0.353	0.362	0.367	0.365	0.359	0.344	0.316	0.277	0.228	0.160	0.173
0.107											

K-6 14 2 19 30 0.81073 0.000 9:26 61

0.242	0.275	0.351	0.413	0.459	0.447	0.488	0.540	0.558	0.561	0.560	0.557
0.545	0.532	0.519	0.502	0.440	0.446	0.474	0.472	0.468	0.462	0.458	0.452
0.445	0.435	0.423	0.376	0.389	0.416	0.420	0.418	0.415	0.414	0.413	0.410
0.407	0.403	0.361	0.381	0.413	0.423	0.430	0.436	0.441	0.443	0.446	0.443
0.438	0.385	0.434	0.463	0.470	0.469	0.459	0.442	0.413	0.372	0.314	0.234
0.206											

FLUX MAP 2-1-65

```
H-4  43 5 19                100 0.81073 0.000  9:26    61    +1
 0.080 0.077 0.115 0.175 0.218 0.243 0.233 0.266 0.285 0.292 0.295 0.296
 0.291 0.284 0.278 0.270 0.259 0.224 0.233 0.240 0.239 0.235 0.232 0.227
 0.225 0.221 0.218 0.214 0.189 0.197 0.211 0.211 0.213 0.213 0.213 0.211
 0.211 0.210 0.207 0.184 0.191 0.208 0.213 0.215 0.217 0.218 0.221 0.221
 0.224 0.222 0.199 0.215 0.232 0.234 0.234 0.230 0.222 0.210 0.191 0.165
 0.128

J-10  1 6 19                 10 0.81073 0.001  9:26    61    -1
 0.286 0.362 0.435 0.487 0.478 0.536 0.589 0.605 0.613 0.613 0.607 0.597
 0.563 0.570 0.551 0.474 0.503 0.523 0.519 0.515 0.508 0.501 0.493 0.484
 0.471 0.457 0.398 0.431 0.446 0.453 0.454 0.455 0.453 0.451 0.450 0.448
 0.439 0.380 0.431 0.456 0.462 0.467 0.472 0.477 0.481 0.485 0.468 0.482
 0.413 0.495 0.514 0.521 0.516 0.506 0.482 0.438 0.380 0.311 0.222 0.250
 0.165

P-4   5 1 20                 10 0.81099 0.000  9:33    61    -1
 0.400 0.509 0.619 0.706 0.713 0.784 0.871 0.905 0.930 0.939 0.944 0.936
 0.926 0.908 0.883 0.782 0.814 0.832 0.829 0.820 0.809 0.800 0.792 0.779
 0.770 0.757 0.651 0.737 0.751 0.747 0.747 0.747 0.741 0.743 0.739 0.736
 0.719 0.623 0.725 0.752 0.762 0.776 0.785 0.790 0.794 0.794 0.791 0.773
 0.669 0.781 0.796 0.795 0.783 0.757 0.721 0.664 0.584 0.478 0.324 0.418
 0.401

F-1  15 2 20                 10 0.81099 0.001  9:33    61
 0.546 0.368 0.437 0.546 0.630 0.669 0.672 0.795 0.835 0.853 0.867 0.871
 0.873 0.863 0.847 0.827 0.745 0.740 0.789 0.786 0.779 0.771 0.766 0.765
 0.758 0.737 0.725 0.648 0.681 0.719 0.720 0.722 0.721 0.722 0.719 0.717
 0.713 0.701 0.628 0.669 0.703 0.714 0.716 0.721 0.729 0.735 0.732 0.739
 0.736 0.558 0.713 0.757 0.761 0.755 0.725 0.694 0.635 0.566 0.478 0.363
 0.316

M-7  44 5 20                 30 0.81099 0.000  9:33    61
 0.553 0.422 0.507 0.508 0.686 0.684 0.741 0.819 0.845 0.852 0.853 0.841
 0.826 0.808 0.786 0.757 0.643 0.680 0.708 0.703 0.701 0.694 0.688 0.679
 0.672 0.664 0.642 0.553 0.601 0.622 0.625 0.625 0.622 0.624 0.624 0.623
 0.619 0.611 0.533 0.583 0.614 0.621 0.625 0.631 0.637 0.644 0.651 0.657
 0.654 0.582 0.639 0.679 0.686 0.662 0.673 0.648 0.611 0.552 0.469 0.368
 0.281

L-15 53 6 20                  3 0.81099 0.008  9:33    61    -1
 0.437 0.555 0.672 0.765 0.784 0.854 0.953 0.993 1.021 1.036 1.049 1.047
 1.034 1.012 0.981 0.881 0.913 0.937 0.935 0.933 0.933 0.920 0.908 0.891
 0.875 0.848 0.733 0.821 0.832 0.832 0.828 0.826 0.827 0.819 0.818 0.809
 0.793 0.690 0.797 0.820 0.834 0.840 0.855 0.865 0.868 0.867 0.865 0.846
 0.738 0.654 0.872 0.873 0.861 0.837 0.790 0.728 0.642 0.523 0.364 0.506
 0.425

D-12  7 1 21                 30 0.81260 0.000  9:48    61
 0.145 0.215 0.305 0.362 0.388 0.382 0.449 0.464 0.474 0.474 0.470 0.464
 0.456 0.450 0.440 0.413 0.369 0.410 0.410 0.409 0.403 0.400 0.394 0.388
 0.383 0.375 0.353 0.325 0.363 0.367 0.371 0.372 0.373 0.372 0.369 0.367
 0.363 0.538 0.323 0.364 0.371 0.377 0.383 0.385 0.386 0.388 0.385 0.386
 0.351 0.366 0.397 0.405 0.405 0.401 0.386 0.363 0.327 0.279 0.215 0.157
 0.182
```

FLUX MAP 2-1-65

R-6 17 2 21 10 0.81260 0.001 9:48 61
0.492 0.362 0.492 0.588 0.664 0.656 0.756 0.832 0.864 0.888 0.897 0.901
0.893 0.874 0.854 0.827 0.729 0.773 0.805 0.802 0.800 0.793 0.786 0.777
0.764 0.750 0.732 0.640 0.687 0.715 0.719 0.719 0.717 0.717 0.717 0.713
0.709 0.700 0.614 0.670 0.701 0.714 0.721 0.728 0.733 0.736 0.741 0.741
0.731 0.638 0.727 0.748 0.747 0.732 0.706 0.669 0.616 0.550 0.462 0.332
0.357

J-8 46 5 21 30 0.81260 0.000 9:48 61
0.435 0.445 0.558 0.650 0.713 0.672 0.804 0.842 0.857 0.864 0.858 0.348
0.834 0.811 0.784 0.746 0.625 0.688 0.693 0.683 0.668 0.653 0.657 0.651
0.646 0.640 0.625 0.541 0.600 0.621 0.622 0.619 0.617 0.614 0.611 0.605
0.600 0.593 0.513 0.581 0.616 0.627 0.634 0.640 0.645 0.651 0.661 0.663
0.659 0.572 0.669 0.701 0.711 0.714 0.702 0.669 0.617 0.547 0.454 0.336
0.299

G-12 55 6 21 10 0.81260 0.001 9:48 61 -1
0.302 0.330 0.461 0.516 0.500 0.579 0.626 0.641 0.646 0.549 0.634 0.621
0.609 0.601 0.575 0.492 0.536 0.544 0.538 0.527 0.515 0.514 0.513 0.508
0.501 0.486 0.416 0.467 0.477 0.476 0.479 0.476 0.476 0.473 0.472 0.469
0.456 0.393 0.456 0.472 0.477 0.481 0.485 0.487 0.490 0.496 0.500 0.487
0.430 0.511 0.529 0.536 0.532 0.516 0.490 0.448 0.391 0.317 0.223 0.249
0.139

B-6 6 1 22 30 0.81146 0.000 9:55 61 -1
0.237 0.291 0.333 0.357 0.340 0.404 0.424 0.435 0.439 0.438 0.436 0.432
0.424 0.415 0.395 0.343 0.391 0.392 0.388 0.387 0.383 0.378 0.372 0.367
0.360 0.343 0.299 0.343 0.351 0.353 0.353 0.355 0.355 0.353 0.350 0.346
0.328 0.293 0.342 0.351 0.356 0.361 0.364 0.366 0.368 0.370 0.366 0.349
0.322 0.370 0.377 0.377 0.374 0.363 0.345 0.314 0.274 0.220 0.158 0.181
0.134

N-14 18 2 22 10 0.81145 0.000 9:55 61
0.342 0.291 0.383 0.470 0.535 0.534 0.619 0.677 0.708 0.725 0.731 0.735
0.731 0.720 0.702 0.680 0.595 0.627 0.648 0.646 0.641 0.634 0.630 0.621
0.611 0.598 0.585 0.514 0.554 0.575 0.582 0.575 0.573 0.557 0.566 0.564
0.561 0.559 0.500 0.544 0.576 0.584 0.595 0.604 0.606 0.617 0.613 0.606
0.590 0.517 0.571 0.589 0.590 0.561 0.561 0.529 0.488 0.436 0.366 0.277
0.299

M-2 19 2 23 10 0.81156 0.001 10:03 61
0.371 0.287 0.374 0.462 0.529 0.546 0.603 0.670 0.700 0.716 0.734 0.736
0.734 0.723 0.706 0.689 0.605 0.631 0.657 0.654 0.650 0.540 0.628 0.618
0.606 0.601 0.587 0.526 0.555 0.581 0.582 0.585 0.586 0.566 0.590 0.581
0.578 0.568 0.507 0.547 0.568 0.569 0.566 0.570 0.581 0.588 0.591 0.592
0.587 0.519 0.589 0.614 0.621 0.613 0.595 0.559 0.511 0.448 0.372 0.269
0.302

F-8 48 5 23 100 0.81156 0.000 10:03 61
0.122 0.144 0.182 0.215 0.237 0.229 0.257 0.279 0.285 0.288 0.287 0.283
0.278 0.271 0.262 0.252 0.217 0.226 0.236 0.234 0.229 0.226 0.222 0.218
0.215 0.213 0.208 0.185 0.193 0.207 0.209 0.209 0.209 0.208 0.206 0.206
0.204 0.201 0.182 0.188 0.206 0.211 0.214 0.215 0.217 0.220 0.221 0.222
0.221 0.197 0.213 0.229 0.233 0.231 0.227 0.218 0.205 0.186 0.161 0.124
0.098

FLUX MAP 2-1-65

```
P-9  57 6 23                10 0.81156 0.001 10:03    61    -1
 0.250 0.316 0.373 0.412 0.395 0.479 0.513 0.527 0.531 0.533 0.532 0.524
 0.516 0.505 0.493 0.417 0.475 0.479 0.480 0.479 0.476 0.468 0.461 0.453
 0.441 0.420 0.374 0.424 0.429 0.426 0.427 0.425 0.423 0.421 0.422 0.419
 0.398 0.367 0.423 0.435 0.442 0.446 0.448 0.448 0.451 0.452 0.451 0.420
 0.416 0.464 0.471 0.472 0.466 0.449 0.419 0.372 0.313 0.238 0.186 0.207
 0.067

H-13 20 2 24                30 0.81121 0.000 10:10    61
 0.246 0.257 0.319 0.372 0.408 0.393 0.463 0.439 0.501 0.504 0.502 0.497
 0.488 0.478 0.464 0.444 0.374 0.424 0.425 0.418 0.415 0.407 0.401 0.398
 0.394 0.387 0.373 0.323 0.370 0.377 0.374 0.373 0.372 0.372 0.369 0.368
 0.367 0.354 0.313 0.352 0.359 0.371 0.374 0.373 0.380 0.384 0.389 0.390
 0.366 0.356 0.401 0.409 0.409 0.404 0.391 0.371 0.339 0.294 0.239 0.168
 0.181

C-8  49 5 24                30 0.81121 0.000 10:10    61
 0.438 0.439 0.553 0.651 0.718 0.667 0.787 0.832 0.839 0.841 0.840 0.827
 0.811 0.796 0.782 0.752 0.629 0.707 0.715 0.709 0.704 0.693 0.687 0.679
 0.667 0.654 0.633 0.541 0.611 0.630 0.636 0.636 0.636 0.636 0.637 0.634
 0.629 0.615 0.524 0.600 0.629 0.638 0.648 0.655 0.665 0.670 0.673 0.672
 0.659 0.580 0.695 0.713 0.721 0.716 0.696 0.662 0.611 0.536 0.444 0.314
 0.312

N-8  58 5 24                10 0.81121 0.001 10:10    61    -1
 0.330 0.415 0.492 0.539 0.508 0.608 0.642 0.654 0.655 0.647 0.637 0.625
 0.612 0.593 0.565 0.462 0.544 0.549 0.544 0.538 0.536 0.530 0.523 0.514
 0.505 0.484 0.420 0.480 0.488 0.488 0.486 0.486 0.486 0.484 0.480 0.479
 0.462 0.413 0.483 0.499 0.509 0.517 0.521 0.528 0.529 0.524 0.520 0.476
 0.482 0.535 0.544 0.544 0.535 0.519 0.488 0.444 0.380 0.295 0.213 0.221
 0.070

E-11 21 2 25                30 0.81172 0.000 10:19    61
 0.271 0.263 0.339 0.402 0.452 0.456 0.481 0.543 0.560 0.568 0.569 0.562
 0.556 0.547 0.531 0.513 0.462 0.441 0.481 0.478 0.471 0.465 0.457 0.455
 0.447 0.441 0.431 0.339 0.393 0.426 0.429 0.428 0.427 0.421 0.419 0.414
 0.413 0.407 0.367 0.367 0.420 0.431 0.434 0.439 0.445 0.450 0.452 0.454
 0.451 0.405 0.430 0.464 0.465 0.463 0.450 0.433 0.409 0.375 0.323 0.249
 0.203

H-11 26 2 26                30 0.80696 0.000 10:56    61    -1
 0.283 0.345 0.394 0.407 0.409 0.471 0.486 0.492 0.491 0.489 0.482 0.473
 0.467 0.449 0.413 0.380 0.414 0.412 0.406 0.399 0.394 0.387 0.383 0.378
 0.371 0.346 0.328 0.362 0.364 0.361 0.361 0.360 0.359 0.358 0.357 0.355
 0.330 0.322 0.359 0.369 0.374 0.382 0.387 0.389 0.391 0.392 0.389 0.352
 0.367 0.396 0.402 0.400 0.392 0.377 0.355 0.322 0.273 0.216 0.163 0.171
 0.052

J-14 27 2 27                30 0.80761 0.000 11:02    61
 0.181 0.194 0.245 0.290 0.316 0.303 0.369 0.390 0.398 0.403 0.406 0.407
 0.403 0.398 0.390 0.373 0.324 0.367 0.370 0.366 0.362 0.356 0.352 0.346
 0.342 0.335 0.322 0.280 0.324 0.332 0.334 0.336 0.338 0.336 0.333 0.331
 0.327 0.314 0.279 0.320 0.329 0.331 0.336 0.340 0.344 0.346 0.348 0.344
 0.330 0.299 0.346 0.355 0.356 0.352 0.339 0.317 0.286 0.248 0.199 0.141
 0.175
```

FLUX MAP 2-1-65

```
L-8  29 2 29                30 0.80807 0.000 11:16    61
 0.273 0.241 0.307 0.356 0.407 0.391 0.457 0.488 0.496 0.501 0.500 0.489
 0.479 0.468 0.455 0.436 0.363 0.406 0.412 0.410 0.405 0.399 0.393 0.388
 0.383 0.375 0.362 0.310 0.351 0.359 0.360 0.359 0.357 0.356 0.356 0.356
 0.353 0.346 0.295 0.345 0.360 0.366 0.371 0.376 0.383 0.389 0.391 0.389
 0.382 0.329 0.387 0.402 0.405 0.404 0.396 0.378 0.349 0.311 0.255 0.186
 0.183

F-3  30 2 30                30 0.81332 0.000 11:22    61
 0.253 0.258 0.317 0.373 0.402 0.380 0.457 0.483 0.497 0.502 0.504 0.498
 0.492 0.481 0.468 0.445 0.383 0.433 0.433 0.429 0.423 0.416 0.409 0.405
 0.401 0.393 0.375 0.328 0.381 0.388 0.389 0.389 0.390 0.389 0.385 0.381
 0.377 0.365 0.322 0.376 0.368 0.394 0.400 0.405 0.408 0.410 0.410 0.410
 0.394 0.356 0.412 0.422 0.424 0.420 0.411 0.390 0.358 0.313 0.254 0.175
 0.192

E-5  31 2 31                30 0.81358 0.000 11:30    61
 0.247 0.288 0.358 0.419 0.460 0.435 0.516 0.550 0.565 0.570 0.570 0.563
 0.552 0.536 0.522 0.500 0.419 0.475 0.484 0.481 0.477 0.469 0.463 0.457
 0.450 0.440 0.424 0.359 0.413 0.425 0.426 0.424 0.423 0.421 0.420 0.420
 0.417 0.406 0.349 0.410 0.425 0.433 0.440 0.443 0.449 0.453 0.456 0.457
 0.447 0.366 0.459 0.474 0.476 0.471 0.458 0.438 0.403 0.356 0.292 0.204
 0.236

G-9  22 2 32                30 0.81274 0.000 11:36    61
 0.252 0.319 0.385 0.439 0.462 0.443 0.528 0.549 0.556 0.557 0.553 0.542
 0.530 0.515 0.497 0.460 0.402 0.457 0.459 0.455 0.449 0.442 0.437 0.431
 0.423 0.414 0.390 0.348 0.401 0.407 0.410 0.412 0.412 0.413 0.410 0.407
 0.402 0.378 0.347 0.398 0.408 0.413 0.421 0.424 0.428 0.430 0.435 0.436
 0.412 0.383 0.447 0.456 0.456 0.450 0.437 0.415 0.383 0.334 0.269 0.192
 0.221

R-8  23 2 33                10 0.80833 0.001 11:42    61
 0.397 0.452 0.568 0.660 0.712 0.687 0.835 0.879 0.909 0.928 0.933 0.931
 0.927 0.906 0.877 0.829 0.726 0.829 0.834 0.830 0.825 0.810 0.809 0.791
 0.776 0.767 0.727 0.645 0.737 0.751 0.755 0.753 0.751 0.745 0.741 0.732
 0.731 0.697 0.638 0.721 0.739 0.751 0.773 0.786 0.793 0.798 0.795 0.781
 0.740 0.688 0.768 0.771 0.770 0.758 0.736 0.693 0.635 0.548 0.434 0.312
 0.391

C-5  24 2 34                30 0.80650 0.000 11:49    61
 0.210 0.265 0.338 0.396 0.432 0.409 0.487 0.518 0.534 0.541 0.544 0.539
 0.532 0.521 0.510 0.489 0.413 0.461 0.473 0.472 0.471 0.466 0.460 0.454
 0.448 0.438 0.422 0.358 0.405 0.416 0.421 0.420 0.418 0.420 0.417 0.415
 0.410 0.403 0.344 0.401 0.420 0.430 0.436 0.442 0.446 0.449 0.451 0.449
 0.434 0.377 0.442 0.459 0.460 0.453 0.441 0.419 0.385 0.343 0.282 0.197
 0.223

E-9   9 6 35                10 0.80611 0.001 11:58    61
 0.296 0.343 0.431 0.503 0.548 0.518 0.604 0.643 0.656 0.661 0.656 0.645
 0.634 0.620 0.603 0.576 0.484 0.539 0.550 0.546 0.542 0.534 0.527 0.519
 0.510 0.501 0.487 0.415 0.474 0.489 0.494 0.494 0.494 0.490 0.488 0.485
 0.481 0.465 0.400 0.470 0.487 0.494 0.502 0.506 0.511 0.517 0.524 0.523
 0.509 0.456 0.538 0.554 0.555 0.548 0.532 0.503 0.462 0.403 0.328 0.233
 0.267
```

FLUX MAP 2-1-65

```
L-5  11 6  2                10 0.80681 0.001 12:11     61     -1
 0.324 0.414 0.499 0.559 0.566 0.596 0.673 0.694 0.705 0.707 0.699 0.690
 0.678 0.662 0.642 0.570 0.569 0.600 0.595 0.587 0.581 0.575 0.570 0.560
 0.548 0.535 0.465 0.497 0.527 0.531 0.531 0.534 0.528 0.528 0.524 0.520
 0.508 0.441 0.492 0.521 0.530 0.540 0.546 0.555 0.560 0.562 0.563 0.554
 0.476 0.558 0.581 0.589 0.585 0.568 0.542 0.504 0.452 0.375 0.266 0.286
 0.294

A-9  56 6 22                10 0.81146 0.001  9:55     61     -1
 0.208 0.260 0.302 0.325 0.309 0.370 0.390 0.402 0.408 0.408 0.408 0.403
 0.399 0.392 0.372 0.328 0.374 0.376 0.376 0.375 0.370 0.366 0.358 0.351
 0.343 0.325 0.293 0.329 0.332 0.332 0.333 0.335 0.338 0.336 0.335 0.328
 0.312 0.269 0.329 0.337 0.342 0.346 0.349 0.351 0.353 0.353 0.351 0.328
 0.321 0.353 0.357 0.355 0.349 0.335 0.315 0.283 0.243 0.18[illegible] 0.139 0.162
 0.099
```

FLUX MAP 2-2-10

DATE APR 23, 1977

APPROXIMATE TIME OF MAP 1030 - 1130

POWER 99.0 PERCENT OF FULL POWER

CONTROL BANK D AT 225 STEPS WITHDRAWN

BORON 810 PPM

PRESSURE 2245 PSIA

RCS T-AV 555 DEGREES F

Table 3.3.3-7 Detailed Listings of Adjusted Movable Detector Response Traces for Flux Map 2-2-10

FLUX MAP 2-2-10

```
J-10  1 1  1                30 0.98754 0.000 10:14    61    -1
 0.335 0.423 0.496 0.543 0.516 0.614 0.646 0.661 0.668 0.670 0.666 0.656
 0.646 0.631 0.606 0.517 0.578 0.583 0.576 0.572 0.567 0.564 0.560 0.555
 0.547 0.533 0.464 0.515 0.526 0.525 0.524 0.525 0.527 0.525 0.522 0.517
 0.511 0.447 0.502 0.522 0.529 0.532 0.535 0.534 0.534 0.535 0.534 0.529
 0.465 0.532 0.553 0.558 0.555 0.544 0.520 0.483 0.431 0.361 0.262 0.233
 0.203

D-10 12 2  1                30 0.98754 0.000 10:14    61    -1
 0.278 0.348 0.408 0.445 0.418 0.485 0.511 0.523 0.526 0.525 0.520 0.513
 0.506 0.497 0.486 0.419 0.467 0.479 0.476 0.474 0.471 0.466 0.462 0.457
 0.451 0.441 0.330 0.426 0.439 0.441 0.442 0.441 0.441 0.442 0.439 0.436
 0.430 0.372 0.422 0.435 0.438 0.440 0.442 0.444 0.445 0.447 0.447 0.438
 0.381 0.443 0.454 0.454 0.451 0.441 0.421 0.390 0.345 0.286 0.204 0.192
 0.193

G-9  22 3  1                30 0.98754 0.000 10:14    61    -1
 0.276 0.346 0.401 0.432 0.410 0.486 0.504 0.511 0.513 0.511 0.505 0.496
 0.486 0.473 0.455 0.392 0.442 0.443 0.439 0.436 0.430 0.426 0.421 0.417
 0.411 0.399 0.344 0.395 0.402 0.404 0.404 0.404 0.402 0.400 0.396 0.392
 0.362 0.332 0.379 0.389 0.392 0.394 0.395 0.397 0.399 0.400 0.401 0.394
 0.350 0.406 0.416 0.419 0.416 0.408 0.390 0.361 0.320 0.253 0.161 0.192
 0.183

J-7  32 4  1                30 0.98754 0.047 10:14    61    -1
 0.323 0.392 0.450 0.489 0.465 0.540 0.564 0.573 0.576 0.574 0.568 0.559
 0.550 0.537 0.520 0.453 0.497 0.504 0.501 0.498 0.493 0.489 0.484 0.477
 0.470 0.461 0.408 0.448 0.460 0.459 0.457 0.456 0.453 0.450 0.447 0.445
 0.440 0.394 0.428 0.442 0.448 0.452 0.456 0.458 0.460 0.460 0.461 0.459
 0.409 0.457 0.472 0.476 0.472 0.464 0.449 0.424 0.389 0.338 0.262 0.225
 0.239

K-12 41 5  1                30 0.98754 0.000 10:14    61    -1
 0.374 0.449 0.500 0.504 0.531 0.590 0.606 0.613 0.616 0.611 0.604 0.594
 0.584 0.571 0.531 0.499 0.546 0.543 0.542 0.538 0.536 0.533 0.528 0.521
 0.511 0.478 0.452 0.497 0.500 0.503 0.506 0.508 0.509 0.508 0.507 0.501
 0.474 0.437 0.492 0.497 0.500 0.501 0.505 0.506 0.507 0.507 0.506 0.475
 0.461 0.515 0.523 0.522 0.515 0.499 0.470 0.430 0.373 0.300 0.204 0.211
 0.165

D-8  50 6  1                10 0.98754 0.001 10:14    61    -1
 0.546 0.677 0.773 0.819 0.785 0.914 0.939 0.948 0.946 0.941 0.926 0.909
 0.888 0.868 0.828 0.743 0.832 0.835 0.833 0.827 0.818 0.807 0.798 0.789
 0.779 0.740 0.683 0.767 0.775 0.775 0.776 0.773 0.769 0.764 0.756 0.749
 0.713 0.681 0.753 0.767 0.776 0.781 0.784 0.783 0.781 0.778 0.773 0.711
 0.736 0.789 0.799 0.801 0.792 0.768 0.722 0.655 0.561 0.432 0.337 0.347
 0.000

H-15  2 1  2                30 0.98582 0.000 10:26    61    +1
 0.181 0.171 0.232 0.294 0.347 0.385 0.387 0.464 0.502 0.530 0.552 0.568
 0.580 0.587 0.589 0.586 0.574 0.522 0.583 0.595 0.600 0.604 0.609 0.611
 0.610 0.605 0.600 0.586 0.534 0.592 0.601 0.607 0.611 0.614 0.617 0.620
 0.618 0.613 0.600 0.538 0.602 0.612 0.616 0.620 0.621 0.619 0.609 0.599
 0.584 0.559 0.497 0.539 0.531 0.513 0.489 0.459 0.420 0.370 0.312 0.243
 0.165
```

FLUX MAP 2-2-10

```
J-10  1 2  2                30 0.98582 0.000 10:26     61     +1
 0.350 0.252 0.304 0.377 0.435 0.457 0.458 0.526 0.546 0.556 0.559 0.559
 0.555 0.547 0.537 0.525 0.483 0.458 0.492 0.490 0.484 0.482 0.478 0.474
 0.470 0.464 0.455 0.421 0.410 0.442 0.444 0.443 0.443 0.445 0.443 0.442
 0.437 0.435 0.403 0.403 0.439 0.444 0.448 0.450 0.451 0.451 0.450 0.451
 0.448 0.408 0.435 0.463 0.465 0.463 0.460 0.444 0.416 0.373 0.315 0.235
 0.187

R-11 33 4  2                30 0.98582 0.072 10:26     61     +1
 0.180 0.164 0.193 0.229 0.259 0.233 0.283 0.323 0.346 0.362 0.373 0.384
 0.390 0.394 0.396 0.397 0.393 0.360 0.391 0.399 0.406 0.410 0.412 0.411
 0.409 0.406 0.400 0.395 0.362 0.388 0.400 0.403 0.406 0.407 0.406 0.408
 0.408 0.406 0.400 0.364 0.391 0.398 0.400 0.399 0.401 0.399 0.397 0.393
 0.385 0.380 0.344 0.365 0.365 0.357 0.344 0.331 0.313 0.268 0.257 0.222
 0.181

F-14 42 5  2               100 0.98582 0.000 10:26     61
 0.072 0.082 0.101 0.118 0.130 0.125 0.152 0.162 0.169 0.175 0.179 0.179
 0.180 0.180 0.180 0.175 0.153 0.175 0.179 0.180 0.181 0.181 0.181 0.181
 0.180 0.178 0.173 0.151 0.173 0.176 0.177 0.179 0.180 0.180 0.179 0.178
 0.177 0.172 0.150 0.172 0.177 0.179 0.178 0.178 0.178 0.176 0.174 0.173
 0.167 0.143 0.166 0.168 0.165 0.160 0.152 0.140 0.126 0.109 0.088 0.060
 0.057

H-2  51 6  2                30 0.98582 0.000 10:26     61     +1
 0.159 0.136 0.163 0.202 0.233 0.251 0.251 0.297 0.316 0.328 0.336 0.342
 0.347 0.347 0.347 0.343 0.321 0.306 0.340 0.343 0.345 0.346 0.346 0.345
 0.342 0.339 0.333 0.307 0.303 0.332 0.336 0.338 0.340 0.342 0.341 0.339
 0.337 0.332 0.301 0.301 0.327 0.332 0.335 0.337 0.338 0.337 0.333 0.326
 0.320 0.260 0.298 0.311 0.307 0.299 0.285 0.267 0.243 0.211 0.172 0.125
 0.096

K-2   3 1  3                30 0.98423 0.000 10:32     61
 0.243 0.302 0.368 0.424 0.458 0.451 0.537 0.568 0.592 0.602 0.611 0.618
 0.617 0.614 0.608 0.588 0.528 0.597 0.606 0.608 0.611 0.611 0.610 0.607
 0.602 0.595 0.568 0.509 0.582 0.590 0.592 0.598 0.600 0.599 0.598 0.599
 0.592 0.568 0.510 0.585 0.594 0.596 0.596 0.595 0.593 0.588 0.582 0.575
 0.545 0.500 0.562 0.560 0.548 0.529 0.502 0.465 0.416 0.357 0.283 0.189
 0.193

A-11 13 2  3                30 0.98423 0.000 10:32     61
 0.103 0.139 0.179 0.215 0.242 0.241 0.290 0.314 0.331 0.345 0.354 0.360
 0.363 0.364 0.361 0.356 0.319 0.358 0.366 0.371 0.373 0.374 0.373 0.372
 0.371 0.367 0.361 0.323 0.363 0.372 0.375 0.380 0.383 0.385 0.384 0.382
 0.379 0.369 0.329 0.370 0.376 0.380 0.384 0.386 0.387 0.385 0.381 0.371
 0.355 0.317 0.342 0.334 0.324 0.309 0.289 0.266 0.235 0.199 0.155 0.103
 0.122

J-10  1 3  3                30 0.98423 0.000 10:32     61     -2
 0.340 0.384 0.390 0.418 0.464 0.480 0.487 0.490 0.489 0.484 0.477 0.467
 0.454 0.413 0.399 0.426 0.421 0.417 0.415 0.411 0.410 0.408 0.402 0.394
 0.360 0.359 0.382 0.382 0.382 0.380 0.382 0.382 0.379 0.377 0.373 0.344
 0.349 0.376 0.382 0.385 0.387 0.387 0.387 0.387 0.387 0.385 0.348 0.372
 0.398 0.403 0.402 0.396 0.381 0.357 0.322 0.273 0.206 0.159 0.155 0.045
 0.017
```

FLUX MAP 2-2-10

```
B-8  34 4  3                30 0.98423 0.062 10:32    61
 0.272 0.281 0.333 0.383 0.420 0.411 0.473 0.505 0.524 0.539 0.549 0.551
 0.553 0.553 0.551 0.546 0.488 0.534 0.551 0.557 0.558 0.560 0.553 0.557
 0.554 0.546 0.536 0.478 0.518 0.539 0.545 0.550 0.550 0.548 0.546 0.543
 0.539 0.532 0.477 0.516 0.538 0.539 0.541 0.541 0.541 0.539 0.535 0.528
 0.519 0.460 0.498 0.507 0.500 0.487 0.456 0.441 0.406 0.354 0.314 0.252
 0.201

H-4  43 5  3                30 0.98423 0.000 10:32    61    -1
 0.313 0.393 0.455 0.493 0.462 0.546 0.572 0.583 0.588 0.584 0.578 0.569
 0.556 0.542 0.523 0.448 0.505 0.513 0.511 0.506 0.501 0.498 0.492 0.485
 0.476 0.462 0.395 0.445 0.453 0.452 0.450 0.450 0.450 0.448 0.447 0.447
 0.441 0.384 0.431 0.447 0.449 0.448 0.449 0.449 0.449 0.452 0.454 0.447
 0.390 0.454 0.468 0.470 0.465 0.454 0.436 0.407 0.362 0.306 0.219 0.212
 0.219

B-3  52 5  3                10 0.98423 0.001 10:32    61
 0.157 0.214 0.279 0.336 0.379 0.379 0.457 0.496 0.525 0.547 0.565 0.575
 0.578 0.576 0.570 0.557 0.494 0.555 0.565 0.568 0.569 0.568 0.564 0.559
 0.556 0.551 0.538 0.485 0.543 0.550 0.554 0.558 0.560 0.557 0.556 0.557
 0.554 0.541 0.495 0.552 0.561 0.567 0.571 0.573 0.573 0.570 0.562 0.550
 0.519 0.483 0.513 0.503 0.487 0.466 0.434 0.397 0.349 0.294 0.226 0.157
 0.164

L-10  4 1  4                30 0.98314 0.000 10:39    61
 0.377 0.335 0.421 0.492 0.541 0.519 0.602 0.636 0.650 0.655 0.656 0.650
 0.639 0.628 0.615 0.597 0.513 0.566 0.573 0.571 0.568 0.567 0.563 0.557
 0.551 0.540 0.527 0.458 0.511 0.525 0.526 0.528 0.530 0.530 0.528 0.525
 0.522 0.512 0.449 0.499 0.510 0.510 0.511 0.511 0.514 0.521 0.527 0.531
 0.531 0.471 0.523 0.544 0.551 0.550 0.544 0.525 0.491 0.441 0.376 0.276
 0.224

K-6  14 2  4                30 0.98314 0.000 10:39    61
 0.232 0.302 0.385 0.453 0.498 0.480 0.546 0.580 0.592 0.596 0.597 0.592
 0.586 0.577 0.564 0.548 0.469 0.515 0.524 0.522 0.515 0.511 0.506 0.500
 0.495 0.488 0.477 0.414 0.463 0.476 0.474 0.473 0.470 0.469 0.468 0.465
 0.463 0.453 0.392 0.449 0.464 0.468 0.472 0.472 0.474 0.475 0.475 0.474
 0.468 0.408 0.458 0.434 0.485 0.480 0.468 0.448 0.419 0.374 0.317 0.226
 0.217

C-5  24 3  4                30 0.98314 0.000 10:39    61    -1
 0.234 0.288 0.330 0.349 0.339 0.402 0.419 0.429 0.435 0.438 0.439 0.438
 0.435 0.430 0.414 0.370 0.421 0.425 0.424 0.422 0.420 0.418 0.414 0.412
 0.406 0.386 0.357 0.404 0.410 0.413 0.415 0.416 0.417 0.414 0.412 0.407
 0.385 0.359 0.401 0.404 0.407 0.407 0.408 0.410 0.411 0.409 0.408 0.387
 0.359 0.405 0.406 0.401 0.391 0.374 0.346 0.315 0.272 0.217 0.147 0.156
 0.122

J-10  1 4  4                30 0.98314 0.081 10:39    61
 0.362 0.332 0.397 0.452 0.491 0.478 0.538 0.565 0.580 0.586 0.587 0.587
 0.580 0.573 0.561 0.546 0.479 0.517 0.523 0.519 0.517 0.515 0.511 0.507
 0.503 0.497 0.488 0.436 0.469 0.478 0.478 0.476 0.476 0.479 0.476 0.476
 0.473 0.467 0.423 0.457 0.476 0.479 0.482 0.483 0.481 0.480 0.482 0.480
 0.477 0.433 0.461 0.484 0.487 0.486 0.481 0.465 0.441 0.406 0.356 0.290
 0.240
```

FLUX MAP 2-2-10

```
M-7  44 5  4                30 0.98314 0.000 10:39    61    -1
 0.326 0.410 0.470 0.508 0.474 0.557 0.579 0.586 0.589 0.587 0.561 0.573
 0.563 0.553 0.534 0.460 0.506 0.513 0.507 0.503 0.500 0.497 0.491 0.486
 0.481 0.470 0.410 0.461 0.472 0.473 0.473 0.473 0.473 0.470 0.467 0.464
 0.454 0.392 0.443 0.457 0.459 0.461 0.462 0.464 0.467 0.469 0.471 0.467
 0.408 0.461 0.476 0.476 0.473 0.464 0.448 0.421 0.382 0.323 0.246 0.200
 0.174

L-15 53 6  4                10 0.98314 0.001 10:39    61
 0.188 0.232 0.304 0.370 0.426 0.440 0.508 0.564 0.601 0.634 0.658 0.679
 0.692 0.699 0.697 0.690 0.625 0.681 0.702 0.711 0.717 0.719 0.717 0.710
 0.708 0.700 0.690 0.619 0.686 0.706 0.712 0.717 0.719 0.713 0.713 0.709
 0.701 0.689 0.611 0.679 0.695 0.703 0.710 0.710 0.709 0.707 0.699 0.684
 0.659 0.573 0.625 0.618 0.600 0.573 0.538 0.494 0.443 0.376 0.301 0.200
 0.237

P-4   5 1  5                30 0.98274 0.000 10:45    61
 0.159 0.210 0.275 0.332 0.377 0.382 0.440 0.486 0.511 0.532 0.544 0.551
 0.555 0.552 0.550 0.543 0.494 0.532 0.554 0.562 0.565 0.567 0.566 0.564
 0.558 0.550 0.538 0.486 0.515 0.532 0.533 0.533 0.534 0.534 0.537 0.537
 0.536 0.531 0.481 0.515 0.533 0.539 0.543 0.548 0.549 0.550 0.546 0.537
 0.524 0.468 0.492 0.496 0.485 0.471 0.449 0.419 0.382 0.335 0.277 0.202
 0.161

F-1  15 2  5                30 0.98274 0.000 10:45    61    +1
 0.140 0.143 0.192 0.240 0.280 0.305 0.313 0.374 0.400 0.421 0.437 0.448
 0.457 0.460 0.460 0.456 0.437 0.421 0.456 0.462 0.465 0.466 0.468 0.469
 0.468 0.465 0.463 0.441 0.429 0.463 0.467 0.471 0.474 0.476 0.477 0.478
 0.475 0.471 0.450 0.438 0.471 0.477 0.481 0.483 0.483 0.481 0.478 0.471
 0.463 0.430 0.414 0.434 0.425 0.412 0.392 0.364 0.332 0.290 0.240 0.179
 0.126

B-13 25 3  5                10 0.98274 0.001 10:45    61    -2
 0.358 0.441 0.507 0.529 0.589 0.662 0.702 0.736 0.764 0.783 0.795 0.801
 0.800 0.793 0.744 0.747 0.800 0.807 0.813 0.814 0.811 0.805 0.800 0.794
 0.783 0.724 0.746 0.777 0.784 0.787 0.785 0.788 0.786 0.785 0.783 0.774
 0.719 0.736 0.775 0.783 0.787 0.788 0.785 0.785 0.780 0.758 0.753 0.684
 0.689 0.703 0.688 0.667 0.636 0.593 0.542 0.475 0.395 0.292 0.227 0.197
 0.051

L-13 35 4  5                30 0.98274 0.081 10:45    61    +1
 0.333 0.298 0.352 0.403 0.441 0.446 0.464 0.512 0.529 0.537 0.541 0.544
 0.547 0.544 0.540 0.534 0.500 0.493 0.525 0.525 0.522 0.521 0.523 0.522
 0.517 0.512 0.509 0.479 0.471 0.501 0.507 0.510 0.512 0.508 0.507 0.504
 0.501 0.496 0.465 0.452 0.492 0.498 0.500 0.504 0.504 0.501 0.501 0.497
 0.492 0.466 0.444 0.486 0.489 0.480 0.473 0.458 0.436 0.405 0.361 0.305
 0.232

J-10  1 5  5                30 0.98274 0.014 10:45    61    -2
 0.391 0.464 0.515 0.498 0.576 0.613 0.631 0.640 0.642 0.640 0.631 0.622
 0.608 0.588 0.513 0.543 0.558 0.551 0.548 0.544 0.539 0.536 0.530 0.522
 0.510 0.447 0.483 0.499 0.498 0.496 0.498 0.499 0.498 0.494 0.491 0.484
 0.430 0.470 0.492 0.499 0.502 0.504 0.504 0.504 0.505 0.503 0.501 0.450
 0.492 0.518 0.524 0.523 0.514 0.494 0.463 0.417 0.354 0.266 0.208 0.199
 0.054
```

FLUX MAP 2-2-10

```
N-6  54 6  5                10 0.98274 0.001 10:45    61
 0.442 0.542 0.661 0.749 0.777 0.774 0.866 0.916 0.931 0.939 0.941 0.937
 0.932 0.918 0.902 0.846 0.803 0.830 0.874 0.867 0.861 0.857 0.853 0.850
 0.843 0.833 0.768 0.763 0.821 0.826 0.827 0.625 0.827 0.827 0.825 0.821
 0.814 0.736 0.769 0.620 0.829 0.837 0.840 0.842 0.842 0.839 0.830 0.816
 0.727 0.786 0.825 0.821 0.810 0.792 0.758 0.705 0.631 0.536 0.409 0.314
 0.281

H-6   6 1  6                30 0.96104 0.000 10:52    61    -2
 0.436 0.515 0.573 0.554 0.630 0.675 0.690 0.697 0.698 0.692 0.683 0.671
 0.659 0.643 0.569 0.597 0.613 0.605 0.595 0.585 0.576 0.569 0.566 0.561
 0.554 0.463 0.534 0.551 0.554 0.553 0.549 0.545 0.542 0.538 0.534 0.527
 0.468 0.508 0.527 0.530 0.533 0.536 0.540 0.544 0.547 0.550 0.549 0.487
 0.544 0.564 0.566 0.560 0.547 0.523 0.489 0.442 0.378 0.279 0.238 0.254
 0.067

F-7  16 2  6                30 0.98104 0.000 10:52    61    -2
 0.347 0.409 0.453 0.434 0.508 0.536 0.547 0.551 0.549 0.544 0.537 0.530
 0.520 0.503 0.437 0.481 0.484 0.480 0.475 0.471 0.467 0.463 0.458 0.450
 0.437 0.379 0.432 0.438 0.441 0.443 0.442 0.438 0.437 0.435 0.431 0.421
 0.368 0.423 0.433 0.438 0.442 0.444 0.448 0.449 0.450 0.449 0.439 0.394
 0.454 0.462 0.464 0.458 0.446 0.421 0.336 0.335 0.271 0.186 0.213 0.093
 0.024

H-11 26 3  6                30 0.98104 0.000 10:52    61    -1
 0.259 0.330 0.382 0.424 0.403 0.457 0.485 0.494 0.497 0.498 0.496 0.490
 0.484 0.479 0.464 0.405 0.426 0.439 0.435 0.429 0.424 0.421 0.417 0.414
 0.410 0.403 0.352 0.388 0.401 0.400 0.398 0.397 0.395 0.394 0.392 0.389
 0.385 0.337 0.373 0.390 0.396 0.401 0.404 0.406 0.406 0.405 0.404 0.398
 0.350 0.392 0.403 0.404 0.399 0.390 0.374 0.350 0.315 0.267 0.197 0.168
 0.137

N-4  36 4  6                30 0.98104 0.054 10:52    61    -2
 0.335 0.377 0.408 0.392 0.454 0.476 0.487 0.495 0.500 0.498 0.498 0.494
 0.480 0.477 0.425 0.469 0.469 0.469 0.473 0.483 0.481 0.478 0.473 0.456
 0.444 0.404 0.451 0.448 0.459 0.463 0.464 0.464 0.460 0.448 0.456 0.448
 0.394 0.439 0.448 0.449 0.450 0.455 0.454 0.454 0.448 0.445 0.437 0.384
 0.430 0.442 0.438 0.431 0.420 0.398 0.369 0.333 0.285 0.220 0.207 0.156
 0.082

N-13 45 5  6                30 0.98104 0.000 10:52    61    -1
 0.183 0.166 0.275 0.312 0.316 0.353 0.392 0.414 0.430 0.438 0.444 0.448
 0.449 0.449 0.443 0.407 0.413 0.443 0.449 0.452 0.453 0.451 0.448 0.442
 0.434 0.428 0.392 0.404 0.426 0.429 0.430 0.432 0.434 0.436 0.435 0.430
 0.421 0.390 0.394 0.425 0.432 0.436 0.441 0.440 0.440 0.437 0.431 0.424
 0.380 0.395 0.409 0.402 0.392 0.376 0.355 0.326 0.290 0.242 0.183 0.134
 0.134

J-10  1 6  6                30 0.98104 0.000 10:52    61    -2
 0.208 0.250 0.282 0.279 0.312 0.340 0.350 0.355 0.356 0.355 0.351 0.345
 0.337 0.327 0.287 0.302 0.311 0.308 0.306 0.304 0.302 0.300 0.296 0.292
 0.284 0.246 0.274 0.279 0.278 0.278 0.278 0.278 0.277 0.276 0.273 0.269
 0.235 0.268 0.276 0.279 0.281 0.281 0.281 0.281 0.281 0.281 0.275 0.246
 0.205 0.292 0.293 0.289 0.282 0.267 0.246 0.215 0.173 0.117 0.131 0.059
 0.015
```

FLUX MAP 2-2-10

```
D-12  7 1  7                30 0.97929 0.000 10:56    61     +1
 0.199 0.229 0.275 0.366 0.436 0.486 0.470 0.560 0.595 0.612 0.623 0.627
 0.627 0.623 0.615 0.610 0.591 0.510 0.576 0.582 0.579 0.578 0.576 0.574
 0.571 0.566 0.565 0.555 0.486 0.550 0.565 0.572 0.574 0.575 0.575 0.574
 0.572 0.565 0.554 0.484 0.545 0.556 0.560 0.560 0.565 0.567 0.569 0.569
 0.565 0.554 0.482 0.551 0.560 0.556 0.546 0.523 0.499 0.459 0.405 0.335
 0.240

R-6  17 2  7                30 0.97929 0.000 10:58    61
 0.130 0.166 0.218 0.266 0.303 0.307 0.361 0.396 0.419 0.437 0.453 0.464
 0.463 0.472 0.469 0.463 0.418 0.457 0.468 0.471 0.474 0.474 0.476 0.476
 0.475 0.472 0.465 0.422 0.462 0.477 0.481 0.483 0.484 0.484 0.482 0.478
 0.474 0.467 0.417 0.459 0.468 0.473 0.476 0.476 0.475 0.473 0.468 0.457
 0.443 0.387 0.423 0.419 0.407 0.390 0.366 0.338 0.301 0.257 0.206 0.137
 0.157

J-14 27 3  7                30 0.97929 0.000 10:59    61     -1
 0.196 0.254 0.307 0.347 0.351 0.430 0.467 0.494 0.514 0.526 0.534 0.538
 0.537 0.533 0.520 0.467 0.522 0.533 0.535 0.538 0.537 0.535 0.532 0.529
 0.524 0.510 0.461 0.520 0.529 0.534 0.537 0.540 0.540 0.540 0.539 0.532
 0.520 0.461 0.521 0.529 0.532 0.535 0.534 0.535 0.532 0.527 0.515 0.494
 0.437 0.485 0.480 0.464 0.445 0.416 0.379 0.335 0.279 0.216 0.150 0.192
 0.076

D-14 37 4  7                30 0.97929 0.030 10:58    61     +1
 0.145 0.144 0.188 0.232 0.272 0.302 0.298 0.353 0.379 0.398 0.415 0.427
 0.434 0.439 0.439 0.440 0.429 0.386 0.428 0.437 0.441 0.443 0.444 0.442
 0.440 0.436 0.431 0.424 0.379 0.417 0.426 0.431 0.435 0.438 0.439 0.439
 0.438 0.433 0.426 0.381 0.419 0.426 0.431 0.432 0.436 0.435 0.434 0.433
 0.427 0.418 0.370 0.402 0.403 0.392 0.378 0.361 0.335 0.303 0.266 0.221
 0.166

J-8  46 5  7                30 0.97929 0.000 10:58    61     -1
 0.338 0.428 0.505 0.557 0.529 0.618 0.647 0.656 0.658 0.654 0.651 0.644
 0.632 0.619 0.600 0.520 0.569 0.576 0.569 0.561 0.555 0.549 0.544 0.538
 0.529 0.517 0.449 0.500 0.511 0.511 0.510 0.509 0.507 0.505 0.502 0.497
 0.487 0.426 0.468 0.482 0.483 0.485 0.487 0.491 0.496 0.502 0.508 0.509
 0.452 0.514 0.534 0.537 0.536 0.526 0.506 0.475 0.429 0.364 0.268 0.243
 0.244

G-12 55 6  7                30 0.97929 0.000 10:58    61
 0.203 0.161 0.204 0.245 0.274 0.272 0.295 0.321 0.327 0.328 0.328 0.325
 0.319 0.315 0.308 0.303 0.264 0.283 0.292 0.288 0.283 0.279 0.279 0.278
 0.278 0.275 0.269 0.236 0.259 0.267 0.267 0.267 0.266 0.265 0.264 0.262
 0.261 0.257 0.224 0.252 0.260 0.262 0.264 0.265 0.266 0.267 0.266 0.266
 0.260 0.227 0.262 0.268 0.269 0.267 0.261 0.251 0.234 0.209 0.174 0.122
 0.118

B-6   8 1  8                30 0.97971 0.000 11:04    61
 0.276 0.260 0.330 0.391 0.441 0.437 0.509 0.556 0.579 0.597 0.605 0.615
 0.617 0.618 0.614 0.607 0.543 0.577 0.608 0.615 0.617 0.618 0.616 0.613
 0.606 0.601 0.592 0.531 0.563 0.601 0.611 0.615 0.618 0.622 0.621 0.616
 0.608 0.600 0.535 0.568 0.608 0.613 0.620 0.623 0.623 0.619 0.612 0.602
 0.586 0.512 0.549 0.565 0.556 0.542 0.521 0.490 0.449 0.397 0.332 0.255
 0.186
```

FLUX MAP 2-2-10

```
N-14 13 2  8                30 0.97971 0.000 11:04    61     +1
 0.086 0.095 0.130 0.163 0.191 0.206 0.219 0.255 0.272 0.286 0.297 0.305
 0.309 0.310 0.309 0.306 0.290 0.278 0.302 0.307 0.309 0.310 0.310 0.309
 0.306 0.303 0.298 0.283 0.271 0.293 0.294 0.295 0.296 0.295 0.295 0.295
 0.294 0.293 0.276 0.272 0.291 0.294 0.297 0.298 0.299 0.299 0.295 0.290
 0.283 0.257 0.260 0.265 0.260 0.252 0.240 0.224 0.203 0.178 0.148 0.110
 0.085

J-1  28 3  8                30 0.97971 0.000 11:04    61     -2
 0.208 0.246 0.278 0.278 0.340 0.371 0.394 0.413 0.426 0.436 0.441 0.444
 0.443 0.435 0.390 0.433 0.444 0.450 0.454 0.454 0.452 0.452 0.446 0.442
 0.435 0.389 0.429 0.441 0.446 0.449 0.453 0.453 0.453 0.452 0.449 0.441
 0.393 0.437 0.446 0.449 0.451 0.452 0.452 0.449 0.445 0.438 0.421 0.366
 0.400 0.396 0.385 0.368 0.346 0.317 0.282 0.239 0.187 0.125 0.144 0.103
 0.016

G-5  38 4  6                30 0.97971 0.037 11:04    61
 0.355 0.293 0.359 0.418 0.461 0.455 0.509 0.538 0.549 0.555 0.556 0.555
 0.550 0.537 0.526 0.510 0.458 0.475 0.491 0.491 0.490 0.488 0.483 0.477
 0.473 0.466 0.457 0.422 0.427 0.442 0.442 0.439 0.438 0.438 0.437 0.437
 0.436 0.431 0.404 0.409 0.437 0.441 0.443 0.445 0.448 0.452 0.451 0.450
 0.449 0.415 0.433 0.456 0.460 0.459 0.453 0.438 0.415 0.382 0.335 0.272
 0.211

C-7  47 5  8                30 0.97971 0.000 11:04    61     -1
 0.262 0.332 0.395 0.437 0.418 0.485 0.517 0.531 0.537 0.540 0.540 0.540
 0.536 0.529 0.516 0.458 0.487 0.506 0.504 0.504 0.502 0.499 0.497 0.496
 0.492 0.487 0.435 0.465 0.491 0.495 0.498 0.497 0.495 0.494 0.492 0.487
 0.476 0.427 0.451 0.473 0.475 0.476 0.482 0.488 0.490 0.491 0.489 0.483
 0.425 0.462 0.482 0.483 0.478 0.467 0.446 0.414 0.367 0.308 0.228 0.181
 0.191

A-9  56 6  6                30 0.97971 0.000 11:04    61
 0.087 0.105 0.140 0.170 0.197 0.204 0.236 0.264 0.282 0.297 0.308 0.316
 0.321 0.323 0.323 0.320 0.293 0.313 0.324 0.329 0.331 0.333 0.333 0.332
 0.329 0.328 0.323 0.293 0.317 0.327 0.331 0.333 0.335 0.338 0.340 0.338
 0.334 0.329 0.295 0.323 0.331 0.333 0.336 0.336 0.338 0.336 0.332 0.325
 0.313 0.272 0.299 0.295 0.286 0.273 0.255 0.233 0.204 0.172 0.134 0.089
 0.104

E-9   9 1  9                30 0.97849 0.000 11:11    61
 0.398 0.323 0.411 0.492 0.551 0.547 0.598 0.646 0.658 0.662 0.658 0.649
 0.643 0.636 0.627 0.517 0.560 0.579 0.602 0.600 0.595 0.586 0.578 0.569
 0.562 0.556 0.550 0.500 0.519 0.546 0.547 0.547 0.544 0.540 0.537 0.535
 0.529 0.524 0.484 0.498 0.526 0.531 0.535 0.543 0.548 0.551 0.554 0.553
 0.549 0.469 0.541 0.563 0.566 0.561 0.549 0.527 0.495 0.448 0.382 0.284
 0.232

H-2  19 2  9                30 0.97849 0.000 11:11    61
 0.089 0.107 0.143 0.174 0.200 0.209 0.230 0.259 0.273 0.285 0.293 0.298
 0.300 0.300 0.297 0.291 0.265 0.273 0.288 0.291 0.292 0.292 0.292 0.289
 0.286 0.282 0.277 0.254 0.264 0.276 0.278 0.278 0.277 0.278 0.277 0.276
 0.276 0.273 0.251 0.259 0.268 0.268 0.269 0.271 0.272 0.272 0.271 0.269
 0.262 0.230 0.251 0.251 0.246 0.239 0.227 0.212 0.192 0.166 0.135 0.093
 0.092
```

FLUX MAP 2-2-10

```
L-8  29 3  9                30 0.97849 0.000 11:11     61
 0.230 0.279 0.343 0.393 0.418 0.404 0.473 0.489 0.492 0.496 0.495 0.483
 0.477 0.467 0.458 0.436 0.384 0.430 0.431 0.429 0.423 0.418 0.414 0.409
 0.404 0.397 0.378 0.338 0.381 0.384 0.383 0.380 0.379 0.379 0.379 0.380
 0.375 0.361 0.324 0.374 0.381 0.384 0.388 0.391 0.394 0.397 0.396 0.394
 0.366 0.360 0.390 0.401 0.401 0.397 0.386 0.366 0.337 0.294 0.235 0.159
 0.155

D-3  39 4  9                30 0.97849 0.039 11:11     61
 0.192 0.207 0.258 0.300 0.334 0.327 0.387 0.418 0.434 0.446 0.453 0.456
 0.459 0.457 0.455 0.444 0.393 0.430 0.440 0.441 0.439 0.437 0.438 0.436
 0.434 0.434 0.426 0.380 0.416 0.429 0.431 0.432 0.433 0.434 0.433 0.432
 0.428 0.421 0.375 0.404 0.420 0.423 0.426 0.428 0.428 0.427 0.428 0.425
 0.414 0.362 0.401 0.405 0.390 0.391 0.377 0.355 0.324 0.287 0.242 0.188
 0.169

F-8  48 5  9                30 0.97849 0.000 11:11     61     -1
 0.318 0.408 0.488 0.545 0.531 0.602 0.644 0.660 0.666 0.665 0.657 0.645
 0.633 0.621 0.604 0.537 0.563 0.581 0.577 0.574 0.570 0.564 0.557 0.549
 0.541 0.529 0.474 0.499 0.519 0.520 0.518 0.517 0.515 0.513 0.510 0.507
 0.503 0.454 0.477 0.507 0.515 0.520 0.523 0.527 0.528 0.529 0.529 0.525
 0.461 0.522 0.538 0.539 0.533 0.522 0.504 0.474 0.430 0.364 0.269 0.221
 0.237

P-9  57 6  9                30 0.97849 0.000 11:11     61
 0.103 0.143 0.186 0.223 0.254 0.256 0.312 0.339 0.356 0.369 0.378 0.381
 0.382 0.380 0.380 0.373 0.337 0.377 0.383 0.385 0.386 0.388 0.387 0.387
 0.385 0.381 0.370 0.341 0.378 0.385 0.390 0.393 0.396 0.395 0.393 0.390
 0.385 0.370 0.343 0.381 0.387 0.389 0.392 0.394 0.390 0.387 0.383 0.375
 0.342 0.347 0.356 0.348 0.336 0.317 0.294 0.264 0.229 0.185 0.136 0.122
 0.097

H-3  10 1 10                30 0.98507 0.000 11:18     61
 0.289 0.264 0.340 0.408 0.458 0.446 0.513 0.553 0.570 0.579 0.580 0.582
 0.576 0.568 0.560 0.544 0.472 0.519 0.531 0.530 0.528 0.526 0.524 0.521
 0.519 0.517 0.508 0.443 0.489 0.504 0.505 0.507 0.505 0.502 0.501 0.496
 0.493 0.483 0.421 0.465 0.482 0.484 0.488 0.489 0.491 0.487 0.484 0.483
 0.475 0.416 0.462 0.479 0.479 0.472 0.459 0.437 0.405 0.361 0.306 0.234
 0.178

H-13 20 2 10                30 0.98507 0.000 11:18     61
 0.214 0.239 0.304 0.359 0.395 0.386 0.455 0.479 0.493 0.499 0.501 0.499
 0.495 0.488 0.482 0.461 0.404 0.458 0.460 0.456 0.454 0.450 0.447 0.445
 0.445 0.442 0.439 0.382 0.434 0.437 0.436 0.433 0.433 0.432 0.430 0.429
 0.427 0.411 0.369 0.419 0.422 0.422 0.421 0.421 0.421 0.421 0.422 0.420
 0.405 0.362 0.413 0.416 0.410 0.400 0.385 0.361 0.330 0.288 0.237 0.163
 0.166

F-3  30 3 10                30 0.98507 0.000 11:18     61
 0.200 0.232 0.285 0.327 0.351 0.333 0.396 0.416 0.425 0.431 0.433 0.435
 0.432 0.427 0.423 0.405 0.358 0.406 0.410 0.411 0.409 0.408 0.405 0.402
 0.399 0.395 0.379 0.333 0.383 0.389 0.391 0.391 0.391 0.387 0.386 0.385
 0.383 0.370 0.326 0.379 0.387 0.390 0.393 0.395 0.394 0.392 0.388 0.384
 0.369 0.326 0.374 0.378 0.375 0.368 0.356 0.337 0.310 0.272 0.225 0.154
 0.156
```

FLUX MAP 2-2-10

```
L-11 40 4 10                30 0.98507 0.034 11:18     61     +1
 0.344 0.299 0.299 0.363 0.415 0.450 0.426 0.494 0.516 0.525 0.531 0.528
 0.527 0.525 0.518 0.504 0.486 0.423 0.467 0.472 0.467 0.464 0.459 0.457
 0.455 0.453 0.448 0.443 0.389 0.434 0.445 0.444 0.443 0.444 0.442 0.440
 0.436 0.432 0.428 0.377 0.422 0.437 0.441 0.443 0.443 0.444 0.445 0.446
 0.446 0.442 0.391 0.438 0.457 0.461 0.462 0.454 0.438 0.411 0.374 0.322
 0.250

C-8  49 5 10                30 0.98507 0.000 11:18     61     -1
 0.244 0.314 0.388 0.442 0.446 0.480 0.534 0.545 0.552 0.554 0.554 0.549
 0.544 0.541 0.533 0.475 0.489 0.517 0.516 0.513 0.509 0.507 0.503 0.501
 0.497 0.490 0.446 0.452 0.494 0.488 0.491 0.490 0.490 0.490 0.489 0.487
 0.481 0.435 0.441 0.477 0.481 0.484 0.487 0.491 0.490 0.490 0.486 0.480
 0.442 0.449 0.463 0.484 0.479 0.466 0.444 0.412 0.372 0.315 0.249 0.169
 0.164

N-8  58 6 10                30 0.98507 0.000 11:18     61
 0.140 0.154 0.198 0.233 0.254 0.245 0.292 0.306 0.312 0.315 0.313 0.311
 0.309 0.302 0.297 0.284 0.253 0.286 0.289 0.288 0.287 0.286 0.285 0.283
 0.281 0.278 0.265 0.241 0.271 0.272 0.272 0.272 0.271 0.272 0.271 0.270
 0.268 0.254 0.240 0.271 0.276 0.279 0.280 0.280 0.280 0.278 0.275 0.270
 0.251 0.243 0.266 0.266 0.263 0.256 0.246 0.229 0.207 0.177 0.139 0.095
 0.092

L-5  11 1 11                30 0.99174 0.000 11:24     61
 0.407 0.328 0.412 0.495 0.552 0.552 0.582 0.642 0.656 0.672 0.671 0.669
 0.665 0.657 0.645 0.626 0.557 0.560 0.586 0.581 0.576 0.570 0.566 0.563
 0.562 0.558 0.551 0.498 0.509 0.541 0.540 0.535 0.533 0.531 0.532 0.531
 0.529 0.524 0.479 0.489 0.530 0.536 0.540 0.543 0.546 0.548 0.548 0.548
 0.543 0.488 0.528 0.562 0.569 0.568 0.558 0.538 0.504 0.456 0.391 0.303
 0.215

E-11 21 2 11                30 0.99174 0.000 11:24     61
 0.351 0.270 0.340 0.409 0.459 0.463 0.489 0.540 0.553 0.562 0.564 0.562
 0.553 0.551 0.542 0.532 0.478 0.485 0.511 0.510 0.507 0.504 0.501 0.497
 0.494 0.490 0.483 0.432 0.452 0.476 0.479 0.480 0.479 0.478 0.479 0.477
 0.473 0.467 0.421 0.447 0.471 0.475 0.478 0.483 0.484 0.485 0.486 0.486
 0.480 0.420 0.472 0.439 0.489 0.484 0.471 0.452 0.425 0.385 0.327 0.247
 0.200

E-5  31 3 11                30 0.99174 0.000 11:24     61     +1
 0.312 0.233 0.272 0.338 0.388 0.413 0.397 0.468 0.485 0.495 0.502 0.494
 0.488 0.482 0.474 0.463 0.435 0.387 0.432 0.430 0.426 0.422 0.419 0.416
 0.414 0.412 0.410 0.394 0.355 0.405 0.409 0.411 0.411 0.410 0.410 0.405
 0.405 0.400 0.385 0.347 0.400 0.408 0.411 0.413 0.414 0.415 0.415 0.414
 0.411 0.390 0.366 0.413 0.418 0.418 0.412 0.398 0.375 0.344 0.302 0.245
 0.166

J-7  32 4 11                30 0.99174 0.029 11:24     61
 0.342 0.276 0.340 0.407 0.455 0.448 0.497 0.533 0.546 0.552 0.552 0.547
 0.540 0.529 0.518 0.506 0.448 0.465 0.480 0.478 0.474 0.471 0.469 0.463
 0.457 0.450 0.442 0.402 0.415 0.437 0.436 0.435 0.433 0.430 0.427 0.424
 0.421 0.418 0.388 0.393 0.417 0.423 0.427 0.431 0.433 0.436 0.437 0.436
 0.435 0.400 0.424 0.447 0.449 0.448 0.441 0.428 0.406 0.375 0.328 0.260
 0.198
```

FLUX MAP 2-2-10

```
F-14 42 5 11                30 0.99174 0.000 11:24     61
 0.236 0.279 0.342 0.397 0.430 0.423 0.509 0.539 0.559 0.579 0.589 0.592
 0.597 0.597 0.592 0.575 0.511 0.581 0.591 0.595 0.596 0.597 0.599 0.593
 0.591 0.587 0.564 0.501 0.572 0.581 0.587 0.590 0.592 0.591 0.589 0.586
 0.580 0.559 0.497 0.558 0.532 0.586 0.584 0.584 0.580 0.574 0.568 0.563
 0.537 0.478 0.545 0.549 0.539 0.520 0.491 0.452 0.406 0.351 0.262 0.190
 0.189

H-2  51 6 11                30 0.99174 0.000 11:24     61
 0.160 0.136 0.167 0.204 0.236 0.250 0.257 0.300 0.317 0.329 0.338 0.344
 0.348 0.348 0.347 0.343 0.318 0.313 0.340 0.344 0.346 0.347 0.347 0.345
 0.343 0.338 0.332 0.301 0.310 0.332 0.335 0.339 0.341 0.341 0.340 0.338
 0.336 0.329 0.293 0.307 0.326 0.330 0.333 0.335 0.336 0.334 0.330 0.325
 0.317 0.272 0.301 0.309 0.304 0.295 0.261 0.263 0.238 0.208 0.170 0.122
 0.098
```

3.4 SPECIAL OPERATIONAL TESTS

Two special operational tests of interest here were carried out during Cycle 1 of Zion Unit 2. A third test, also of interest, was carried out during Cycle 1 of Zion Unit 1. Since the two units are virtually identical the results of this third test, actually carried out on Unit 1, are considered to be relevant to Unit 2 as well. The first two special tests were simulated load follow operations in each of which power level was reduced for part of each of three consecutive days in a programmed manner as first approximations to the daily load swings experienced by the operating utility. The third test involved a free running spatial xenon oscillation that was purposely induced to evaluate the reactor response characteristics.

3.4.1 LOAD FOLLOW TESTS

From November 21 through December 1, 1975 load follow demonstration tests were conducted in Zion Unit 2 between power levels of 35% and 85% of rated full power. In the first test, from November 21 through November 24, the daily programmed load pattern was a reference 12-3-6-3 pattern, 12 hours at maximum power, a 3 hour ramp reduction from maximum power to minimum power, 6 hours at minimum power, and a 3 hour ramp return to maximum power. Then, after several days of operation under steady state conditions the second test, from November 28 through December 1 and following a daily programmed load pattern of 16-1½ - 5 - 1½, was carried out. Histograms showing the variations of power level, control bank D position, reactor coolant boron concentration and the ΔI parameter during the two load follow tests are presented in Diagrams 3.4.1-1 through 3.4.1-8. The ΔI parameter, which has not been referred to previously, is defined as the flux difference between the top half of the core and the bottom half, referenced to the full power, axially symmetric power distribution condition and expressed in units of

percent. Calibration of the detector response signals for ΔI determinations is such that under full power, symmetric axial power distribution conditions each detector would indicate 0.50 or 50% in relative units. At four times during the tests (~0100 on 11/23, 0830 on 11/24, 0330 on 11/30 and 0130 on 12/1) particularly adverse power distributions were purposely induced by control rod movement for test purposes. Apart from the ΔI histograms and flux map 2-1-42 no details of the power distributions that resulted during the load follow operations are presented here.

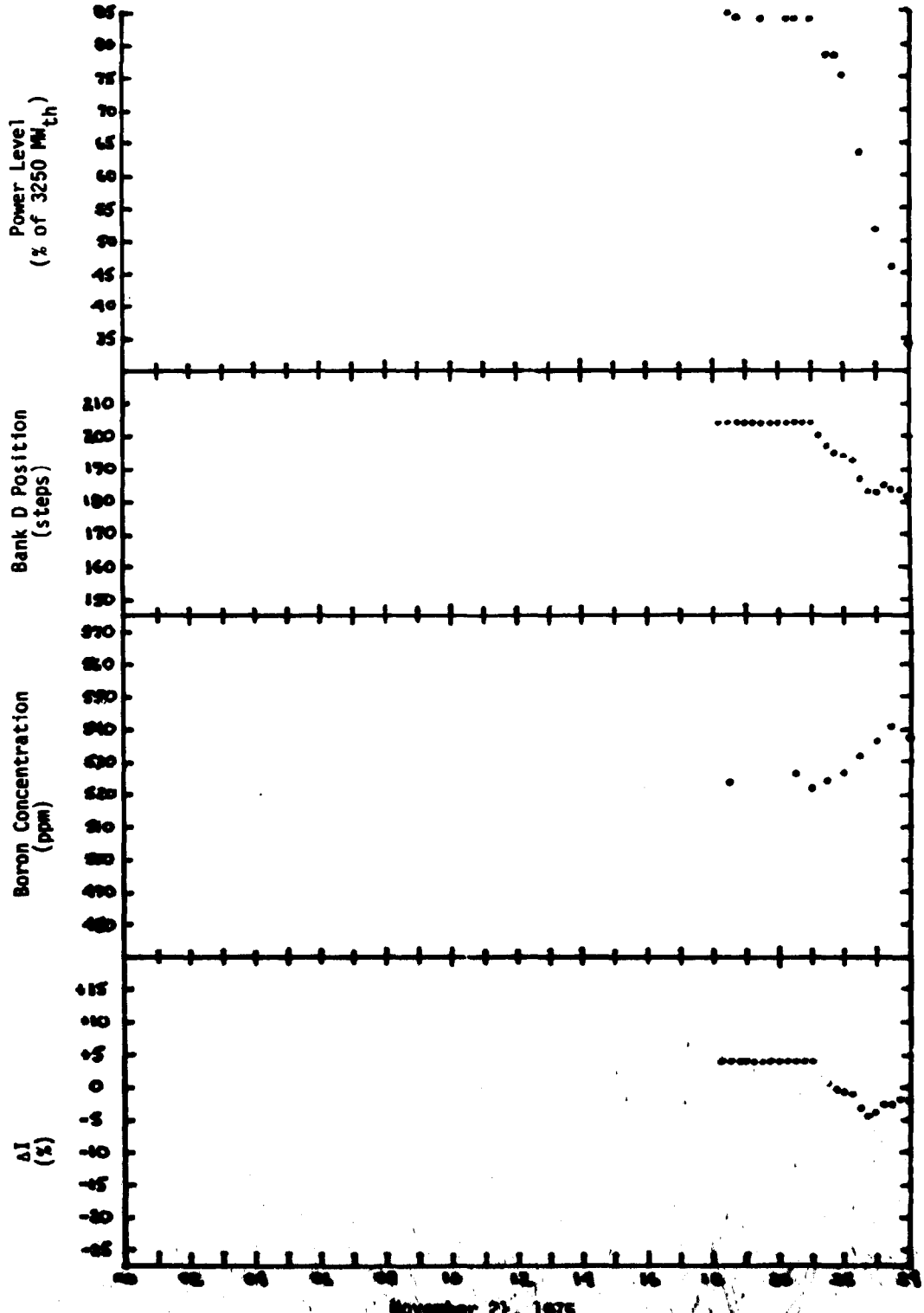

Diagram 3.4.1-1 Core Parameter Variations During Load Follow Tests

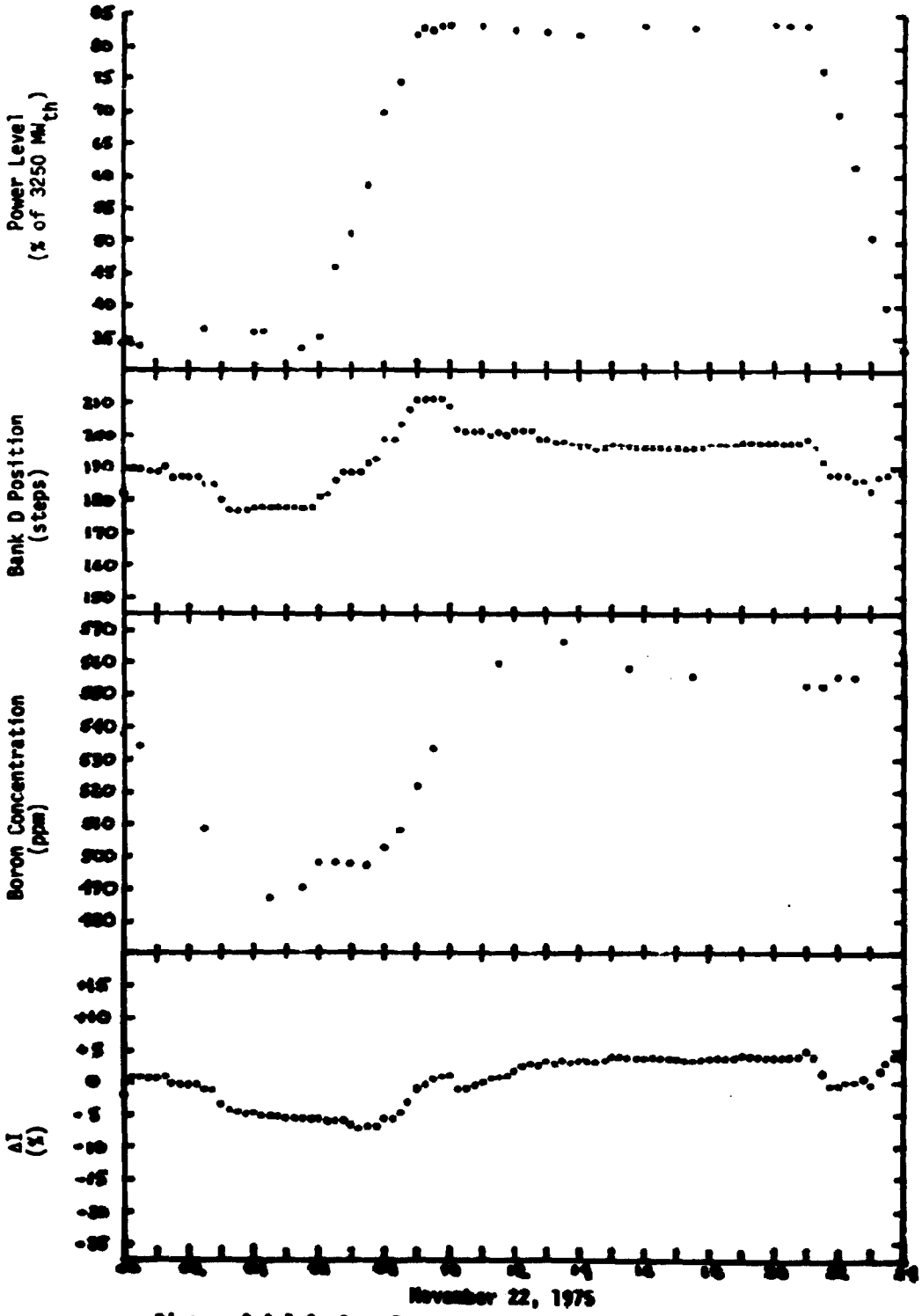

Diagram 3.4.1-2 Core Parameter Variations During Load Follow Tests

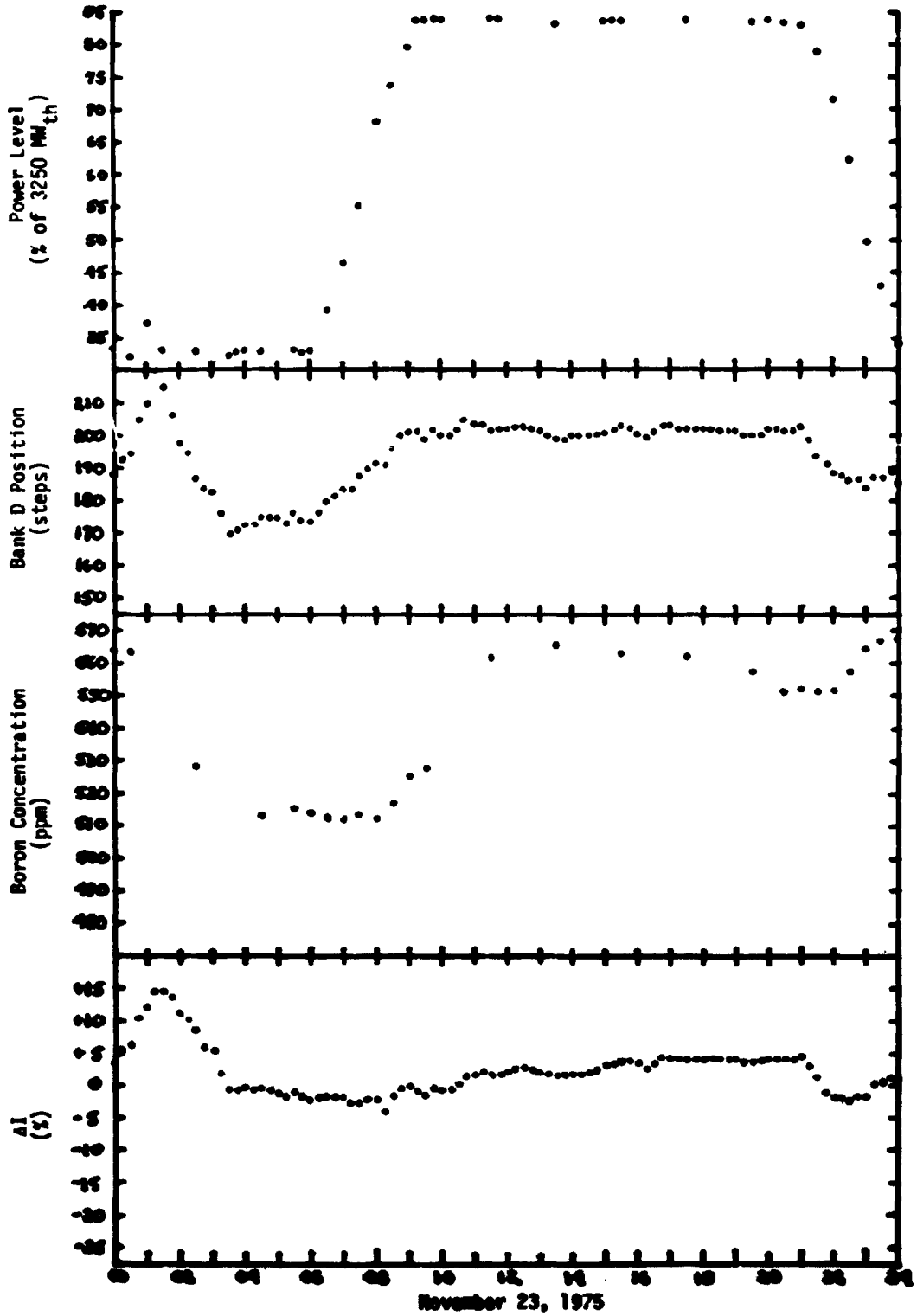

Diagram 3.4.1-3 Core Parameter Variations During Load Follow Tests

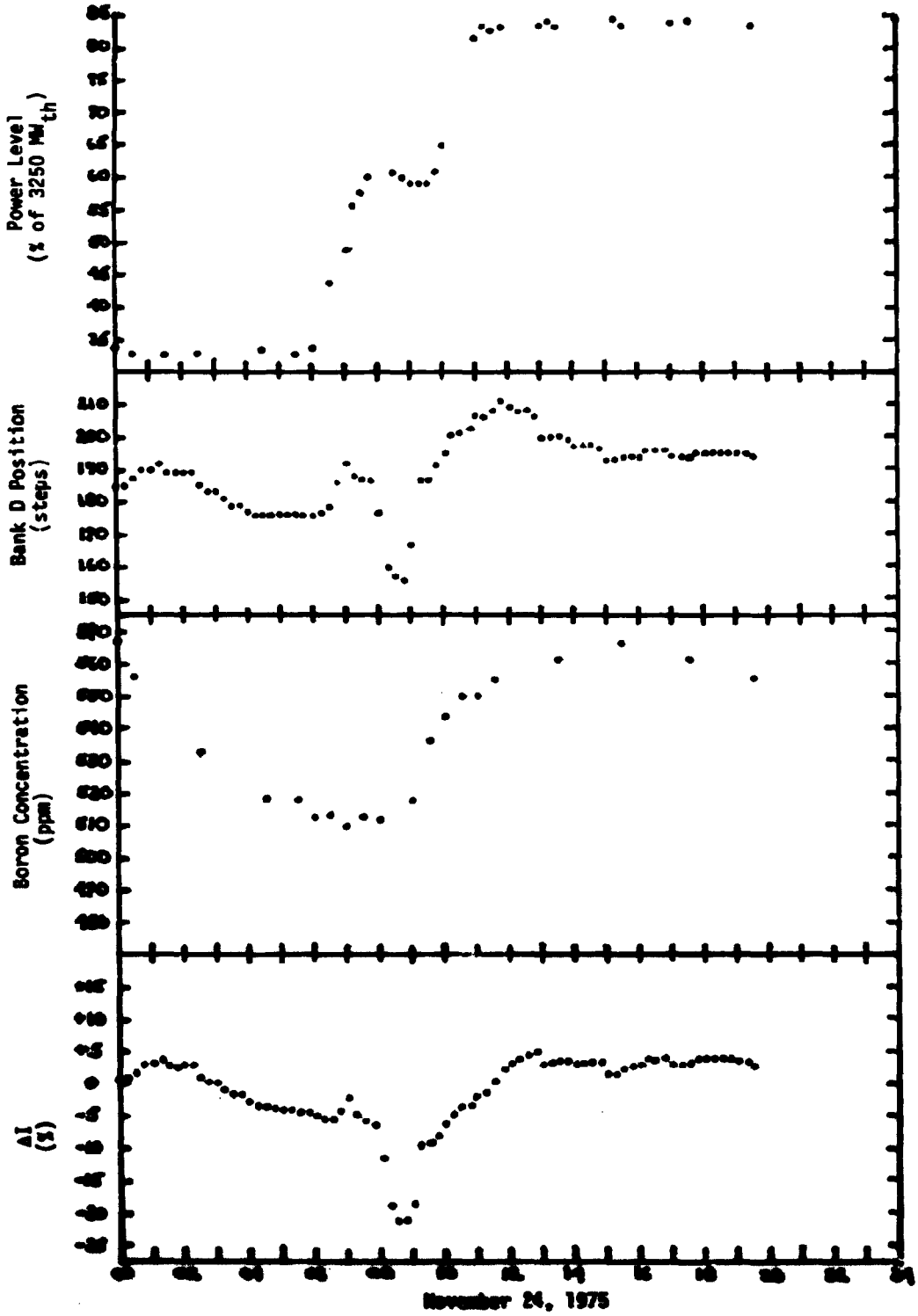

Diagram 3.4.1-4 Core Parameter Variations During Load Follow Tests

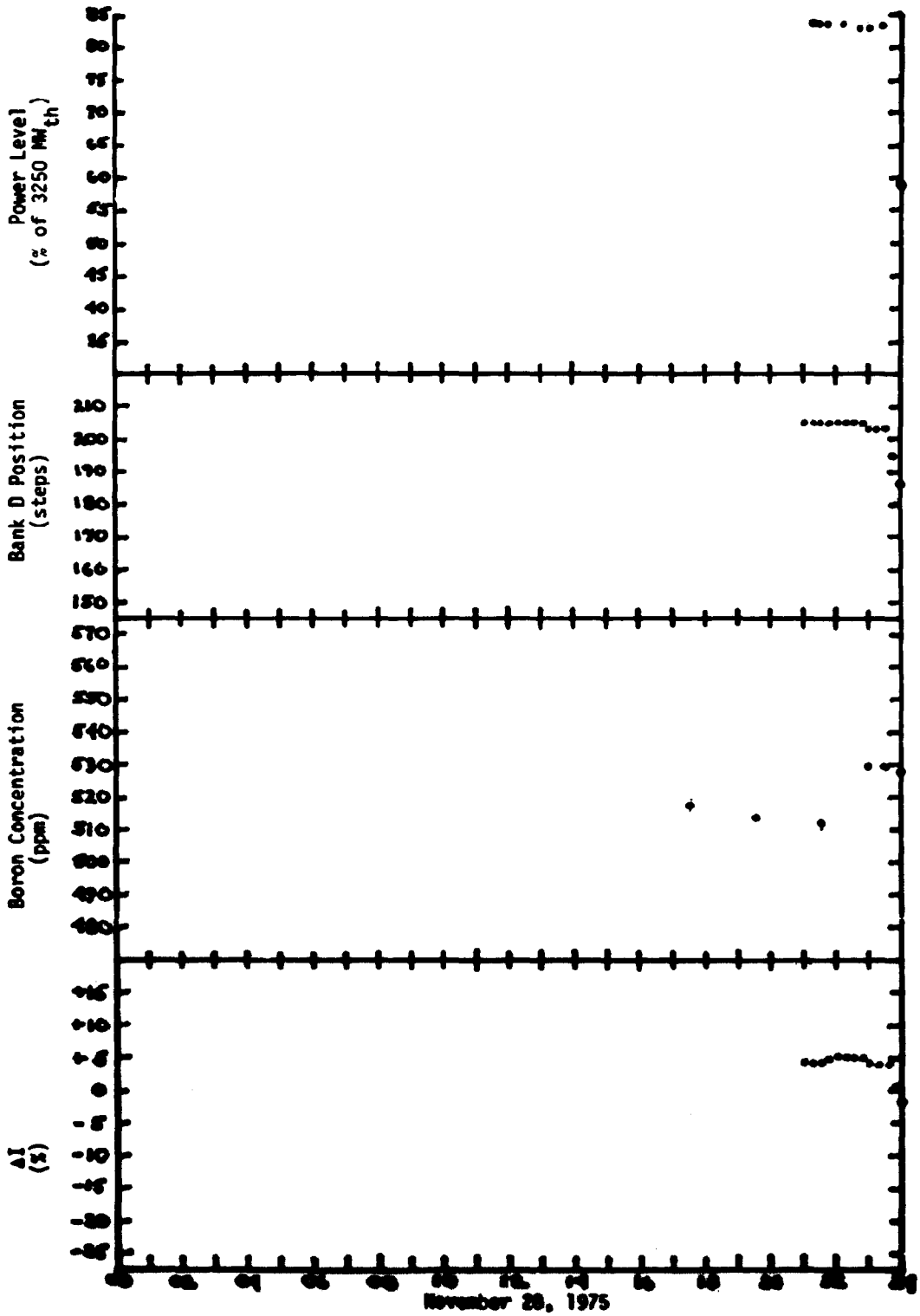

Diagram 3.4.1-5 Core Parameter Variations During Load Follow Tests

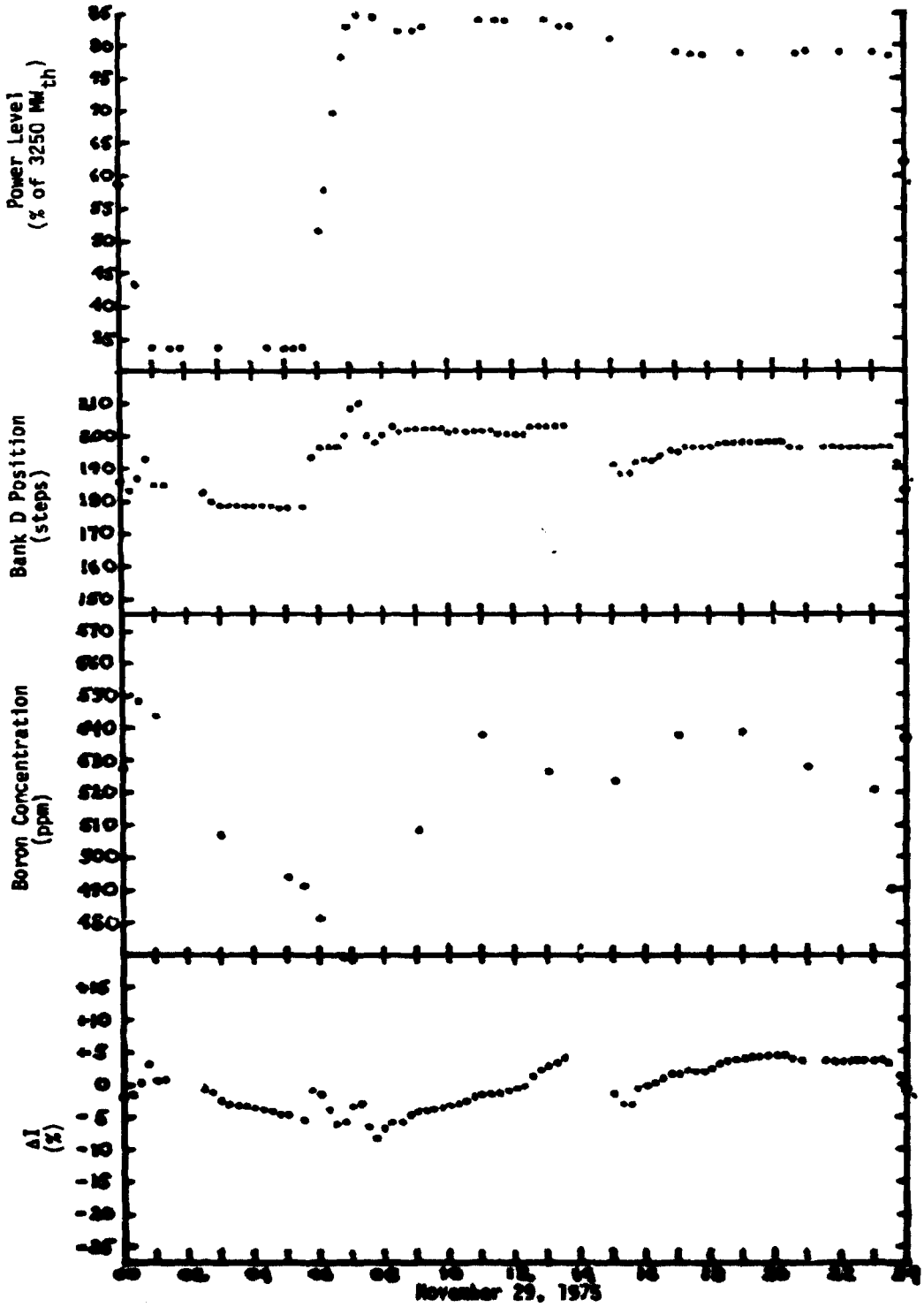

Diagram 3.4.1-6 Core Parameter Variations During Load Follow Tests

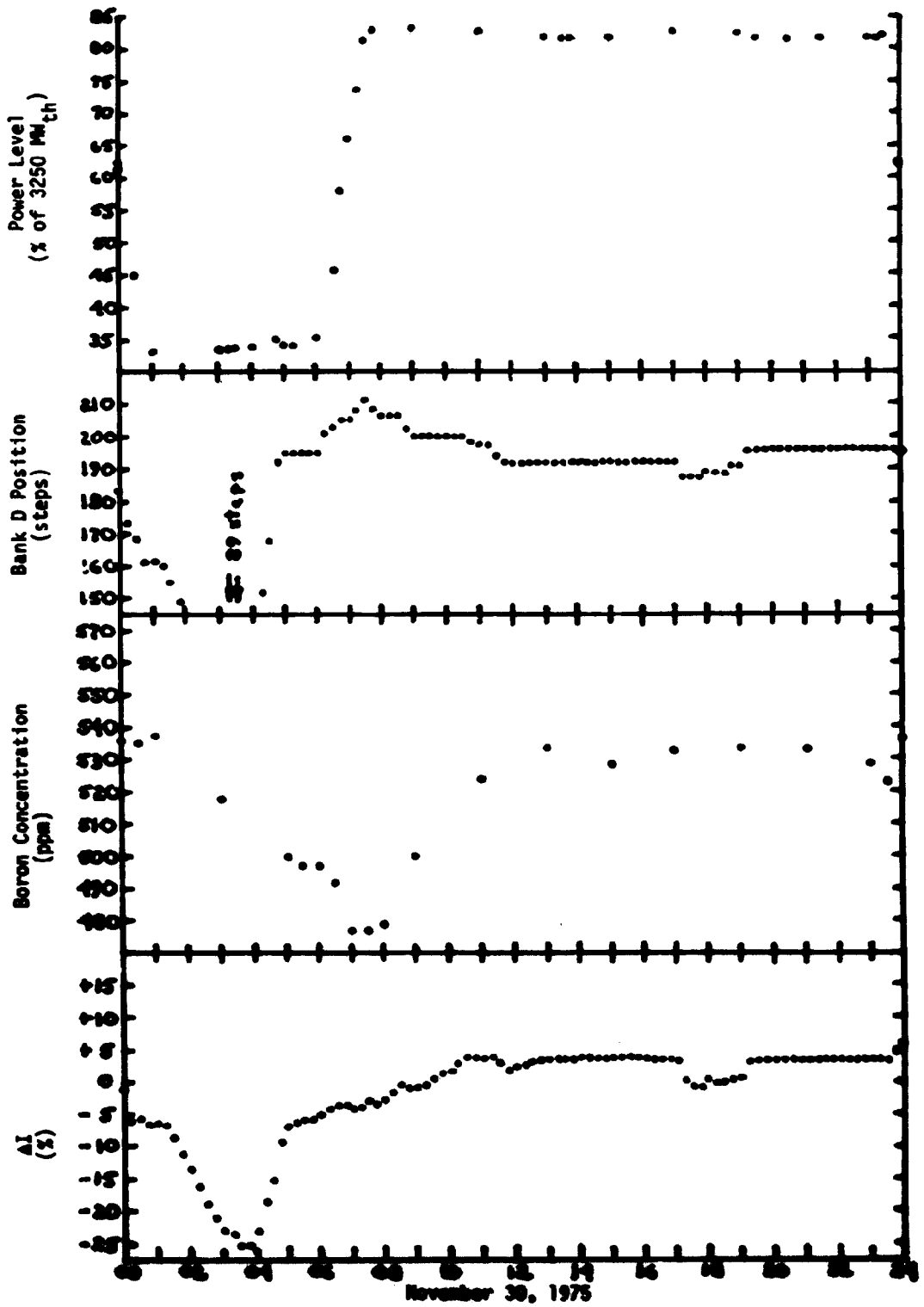

Diagram 3.4.1-7 Core Parameter Variations During Load Follow Tests

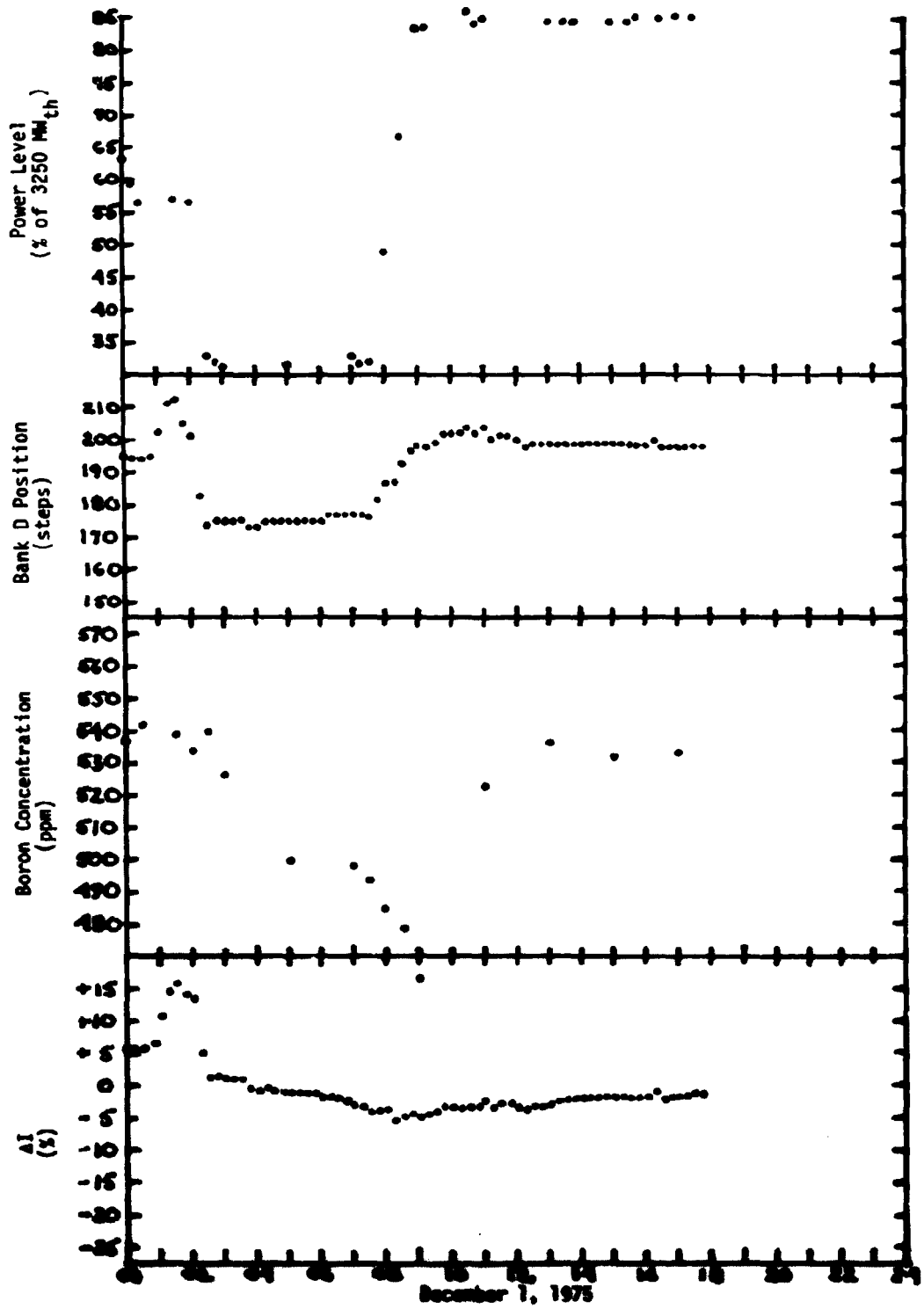

Diagram 3.4.1-8 Core Parameter Variations During Load Follow Tests

3.4.2 AXIAL XENON STABILITY TEST

On June 11 through June 14, 1974 a xenon spatial stability test was performed on Zion Unit 1. The purpose of the test was to observe the response of the core to a (purposely induced) xenon driven spatial oscillation. Due to the very close similarities between the initial cores of Zion Unit 1 and Unit 2 it is believed that the results of the axial xenon stability test performed in Unit 1 are equally indicative of the response to be expected from Unit 2 under comparable conditions, and so this test was not repeated for Unit 2.

The burnup in the Unit 1 initial core at the start of the test was approximately 2216 MWD/MTU. Power level was held at 73 to 74% of 3250 MW_{th} throughout the test. In order to obtain a relatively flat axial power distribution the part length group of control rods was positioned in the core with the bottom of the absorber section of the part length rods at 82 steps. The axial xenon transient was initiated by inserting control bank D to 173 steps (by dilution of the reactor coolant boron concentration), holding that bank position for a period of about four hours to unbalance the iodine and xenon distributions, and then withdrawing control bank D to 209 steps by boration of the reactor coolant. Control bank D remained at 209 steps withdrawn for the remainder of the test. The axial power distribution prior to and during the xenon spatial oscillation was characterized by the axial offset parameter. Diagrams 3.4.2-1 through 3.4.2-4 show the variation of the axial offset with time during the transient.

Under the conditions of the test the stability index was determined to be approximately -0.0027 hr^{-1}; the period of the oscillation was about 28.7 hours.

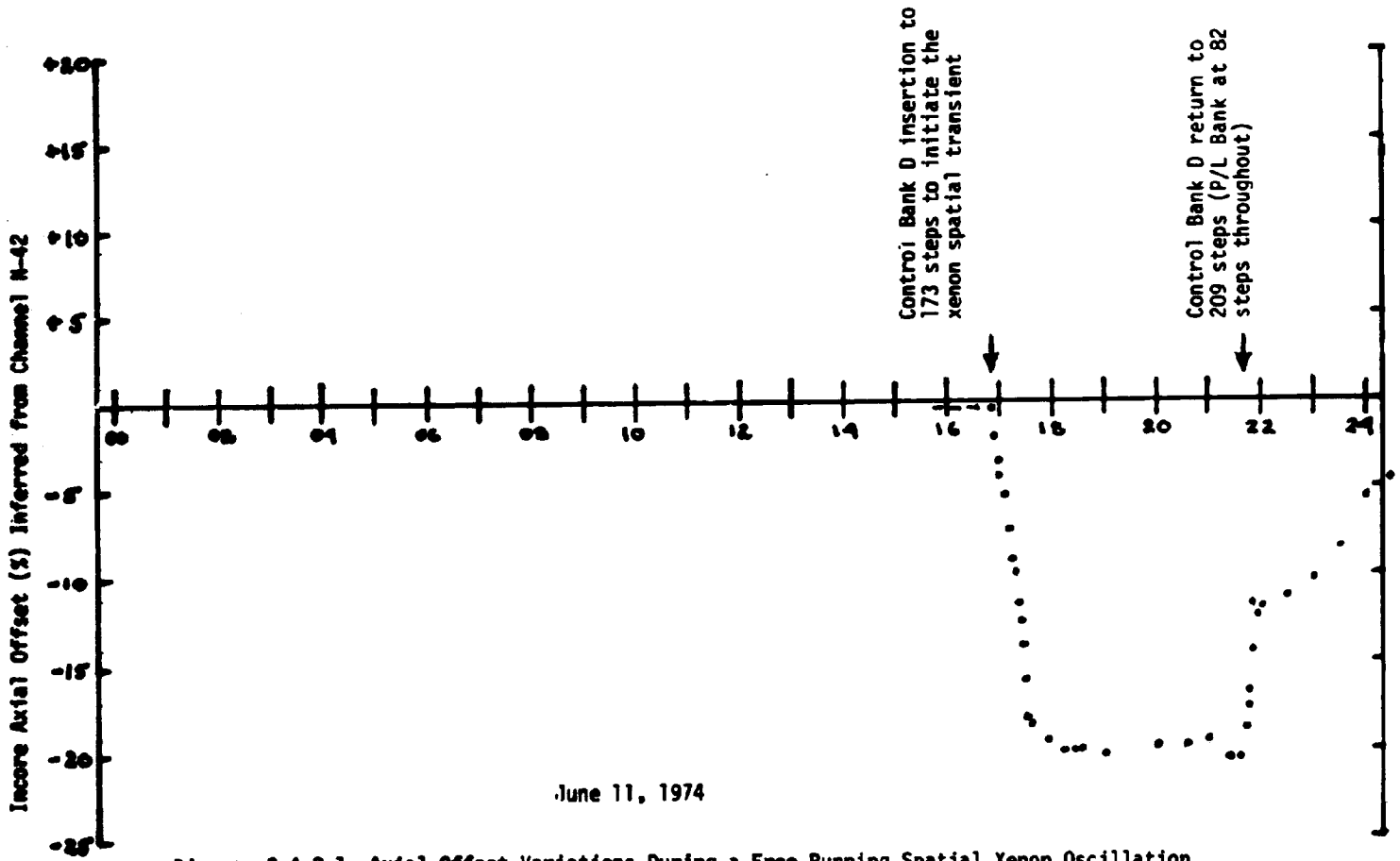

Diagram 3.4.2-1 Axial Offset Variations During a Free Running Spatial Xenon Oscillation in Zion Unit 1 at 2216 MWD/MTU in Cycle 1.

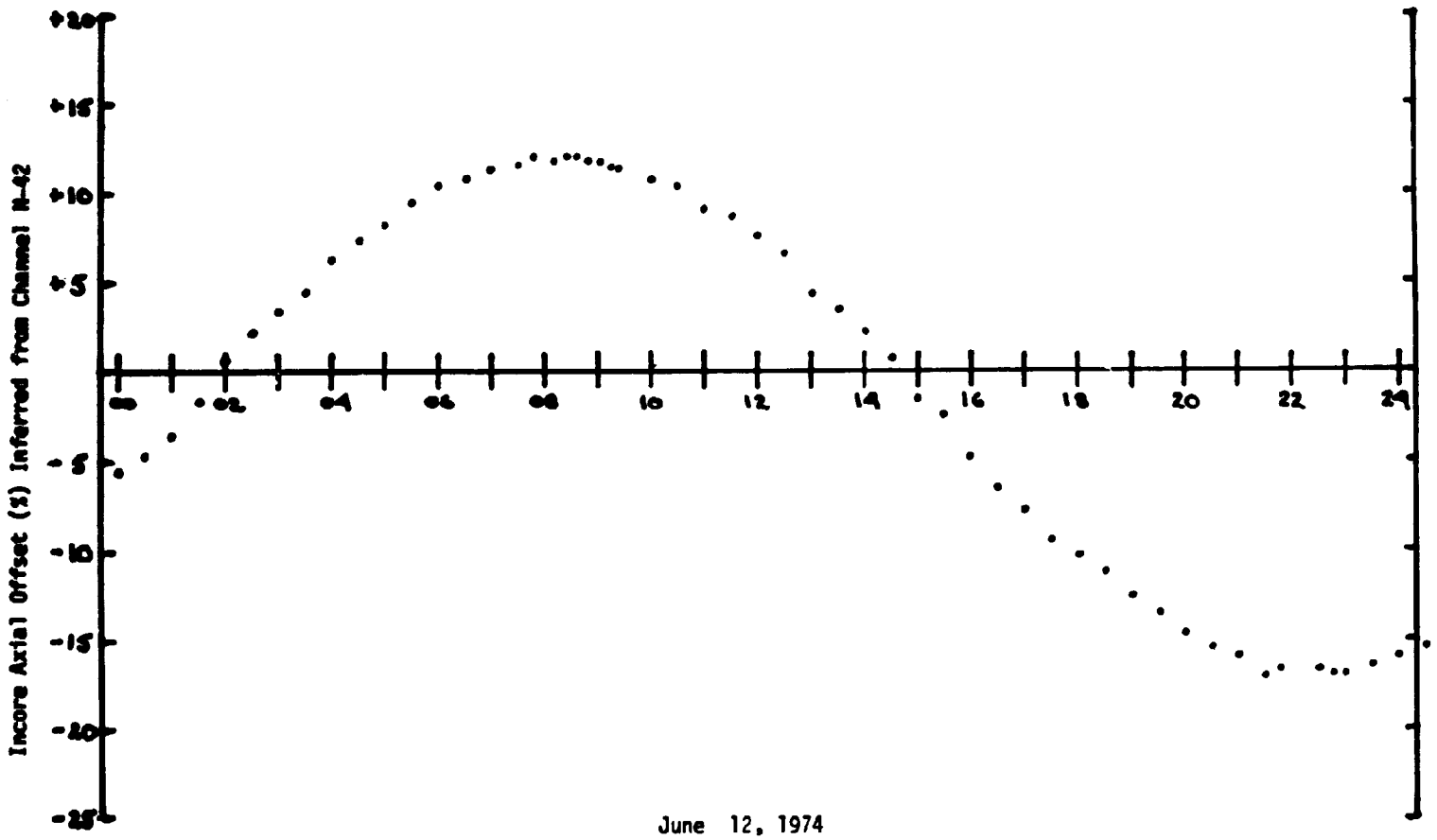

Diagram 3.4.2-2 Axial Offset Variations During a Free Running Spatial Xenon Oscillation in Zion Unit 1 at 2216 MWD/MTU in Cycle 1

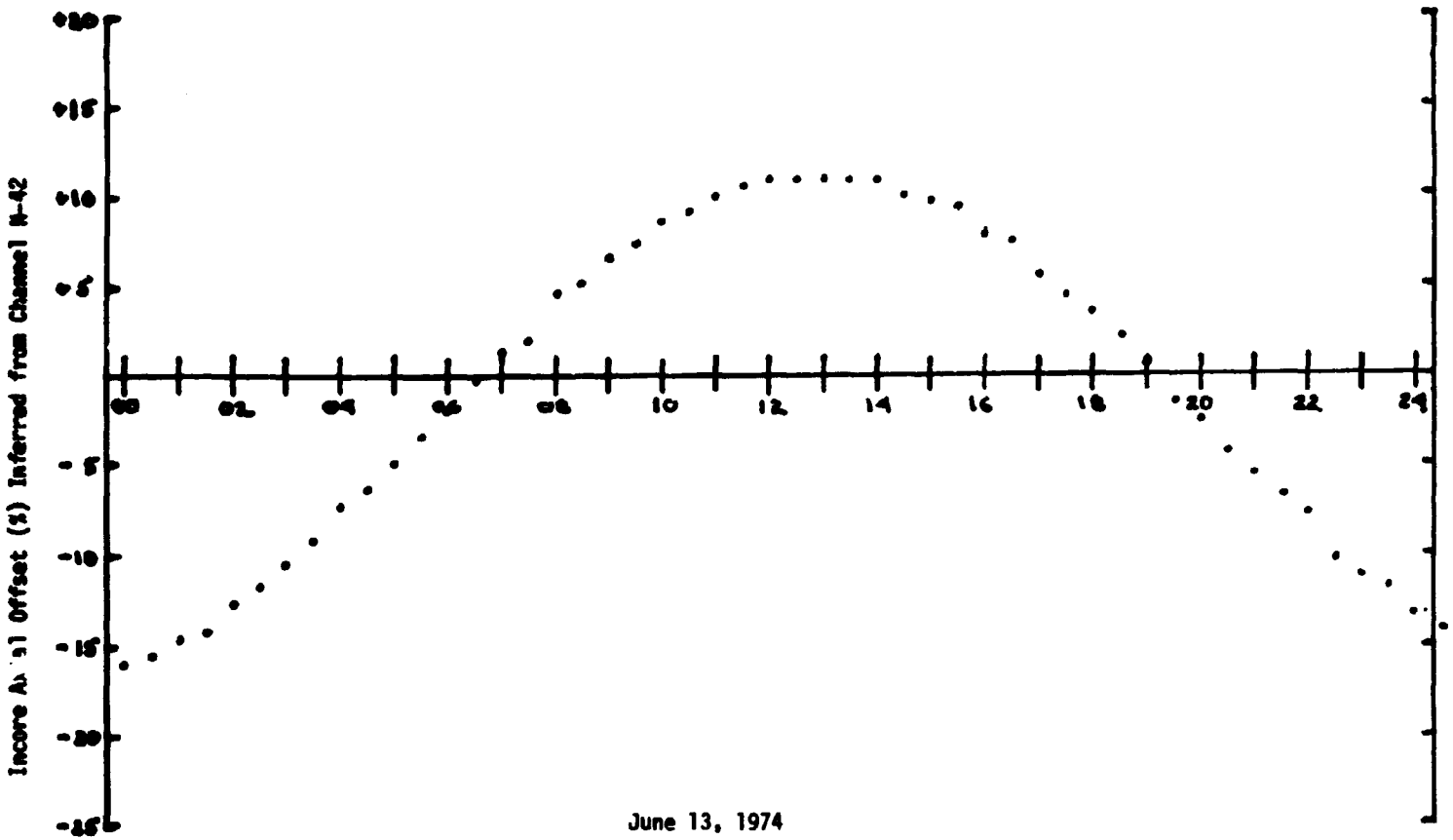

Diagram 3.4.2-3 Axial Offset Variations During a Free Running Spatial Xenon Oscillation in Zion Unit 1 at 2216 MWD/MTU in Cycle 1.

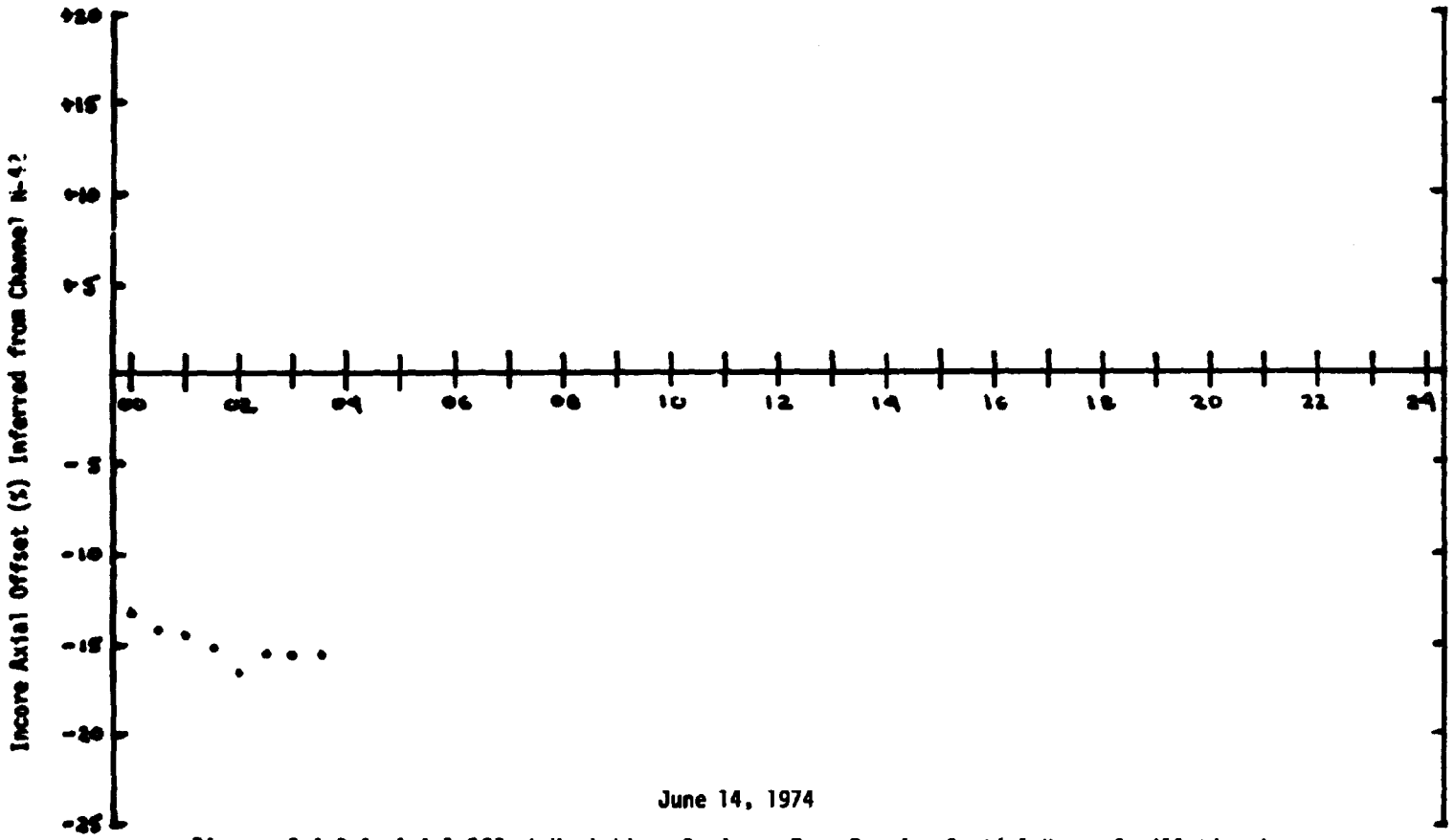

Diagram 3.4.2-4 Axial Offset Variations During a Free Running Spatial Xenon Oscillation in Zion Unit 1 at 2216 MWD/MTU in Cycle 1.