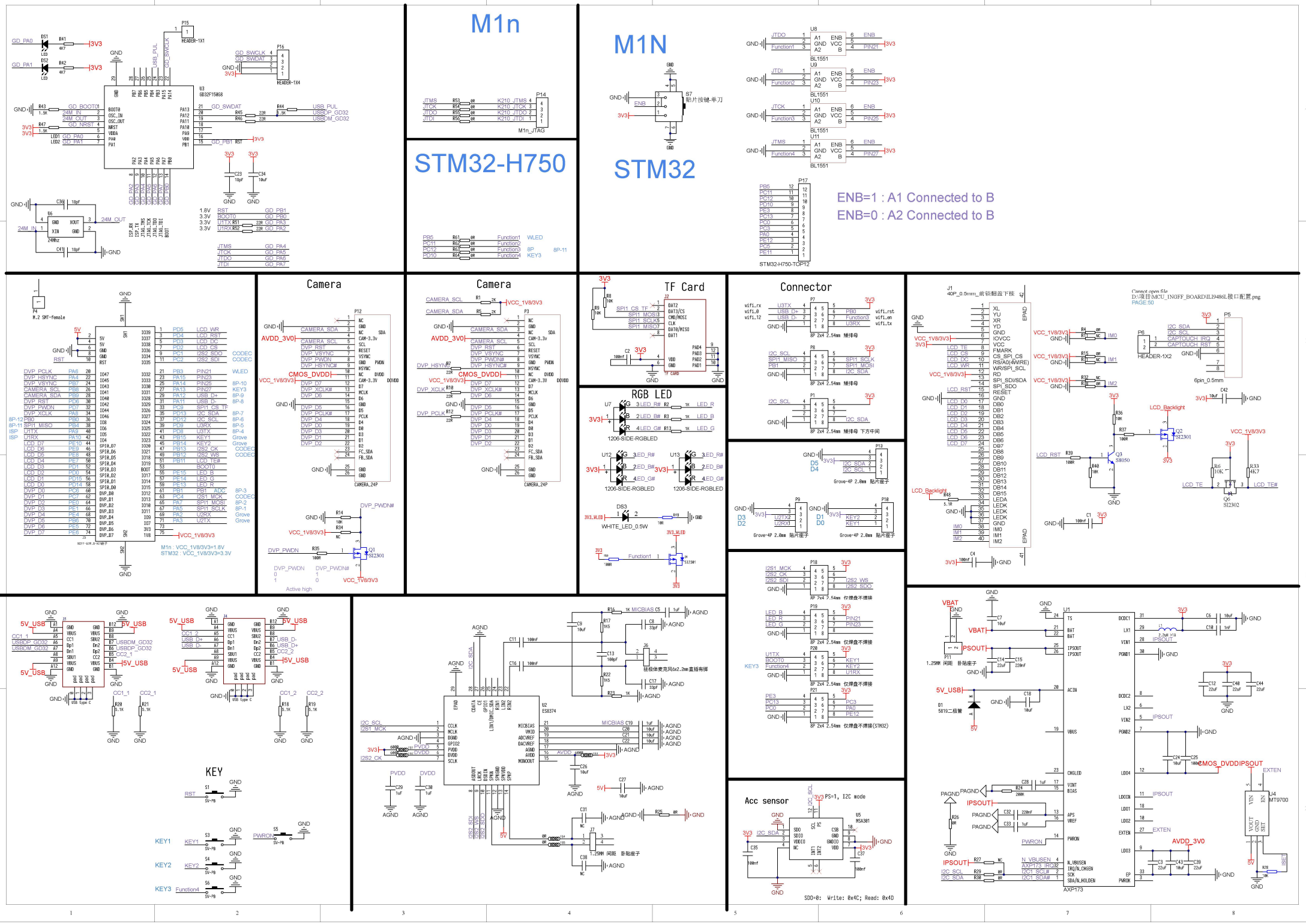
M1n
STM32-H750
M1N
STM32
ENB=1 : A1 Connected to B
ENB=0 : A2 Connected to B
Camera
Camera
TF Card
RGB LED
Connector
Acc sensor
KEY