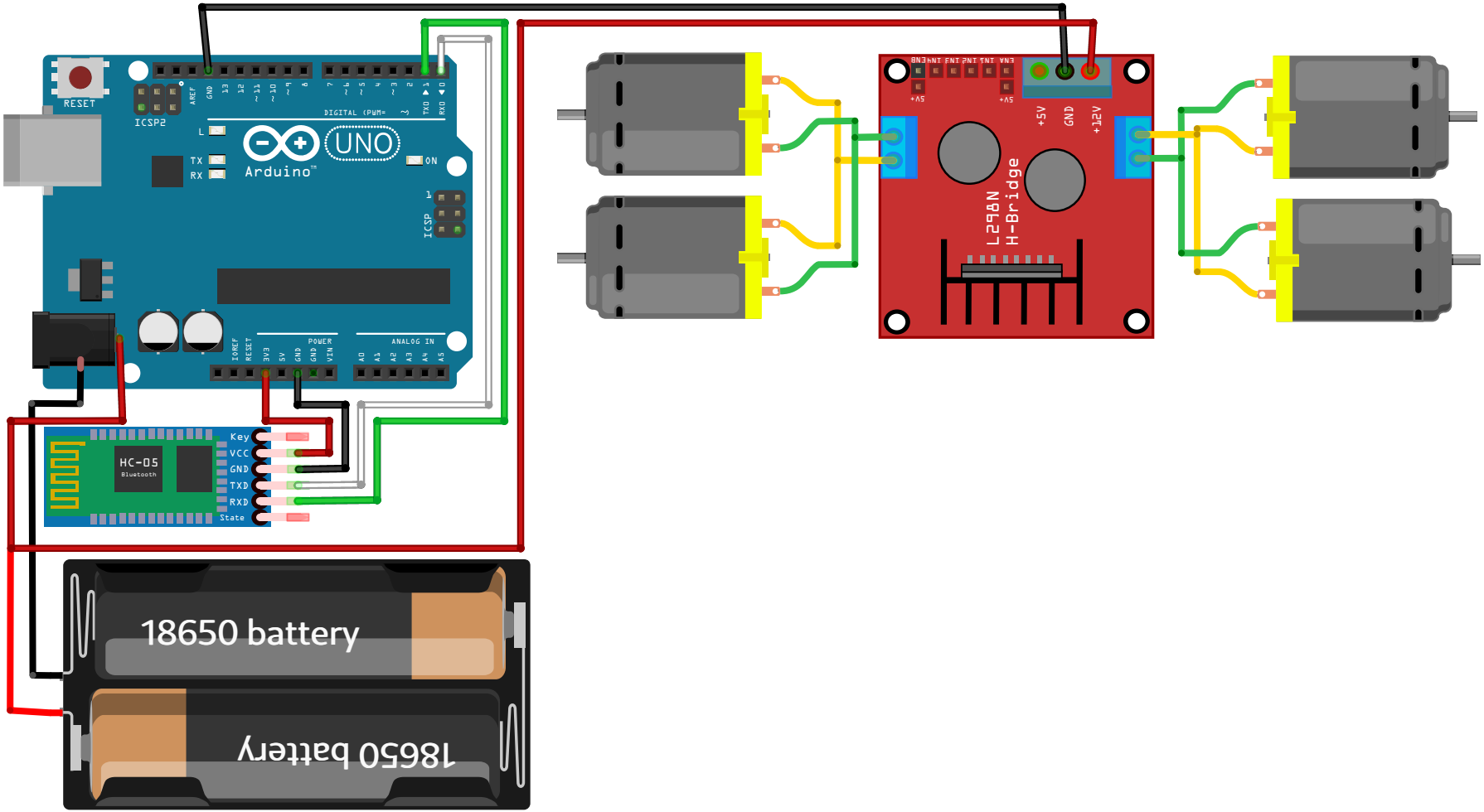
RESET
ICSP2
Arduino
UNO
DIGITAL (PWM=~)
ICSP
POWER
ANALOG IN
HC-05
Bluetooth
Key
VCC
GND
TXD
RXD
State
L298N
H-Bridge
+5V
GND
+12V
18650 battery
18650 battery

fritzing