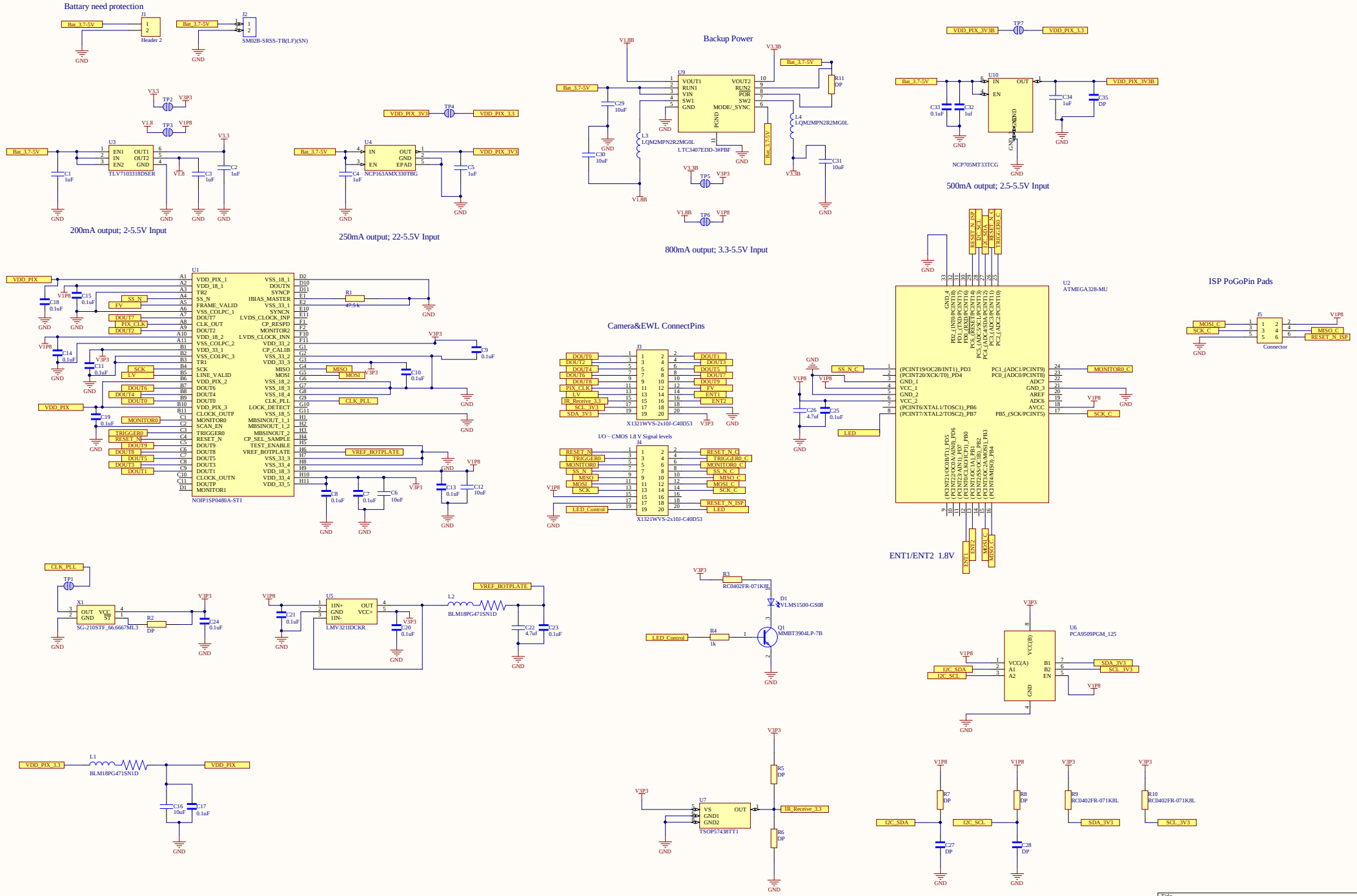

Title		
Size A2	Number	Revision
Date: 2023/11/28	Sheet of	
File: C:\Users\..\CmosTest20231115V3.SchDoc	Drawn By: Fa Peng 20231115	

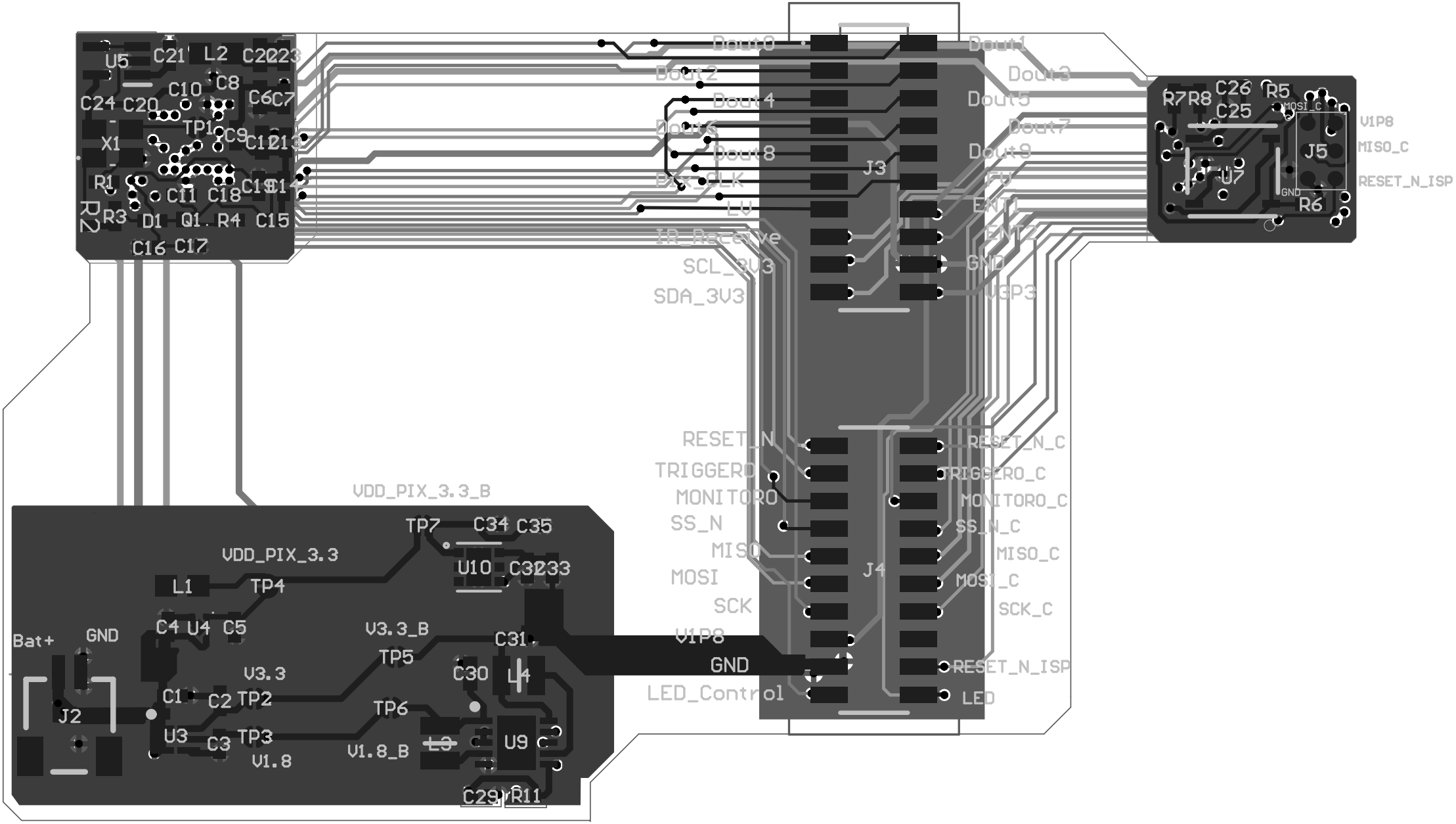
U5
C21
L2
C22
C23
C10
C8
C24
C20
C6
C7
TP1
C9
C12
C13
X1
R1
C11
C18
C19
C14
R2
R3
D1
Q1
R4
C15
C16
C17
Dout0
Dout1
Dout2
Dout3
Dout4
Dout5
Dout6
Dout7
Dout8
Dout9
PIX_CLK
LV
FV
IR_Receive
EXT1
EXT2
SCL_3V3
GND
SDA_3V3
V3P3
J3
R7
R8
C26
R5
C25
MOSI_C
V1P8
MISO_C
J5
U7
GND
R6
RESET_N_ISP
RESET_N
RESET_N_C
TRIGGERO
TRIGGERO_C
MONITORO
MONITORO_C
SS_N
SS_N_C
MISO
MISO_C
MOSI
MOSI_C
SCK
SCK_C
J4
V1P8
GND
RESET_N_ISP
LED_Control
LED
VDD_PIX_3.3_B
TP7
C34
C35
VDD_PIX_3.3
U10
C32
C33
L1
TP4
C4
U4
C5
V3.3_B
C31
Bat+
GND
TP5
V3.3
C30
L4
C1
C2
TP2
TP6
J2
U3
C3
TP3
V1.8
V1.8_B
L9
U9
C29
R11