ADVANCED MATERIALS TECHNOLOGIES

# Supporting Information

for *Adv. Mater. Technol.,* DOI: 10.1002/admt.202101469

## A Pocket-Sized Ten-Channel High Voltage Power Supply for Soft Electrostatic Actuators

*Shane K. Mitchell, Trent Martin, and Christoph Keplinger**

© 2022 Wiley-VCH GmbH

# Supporting Information

***Title:*** *A Pocket-sized Ten-channel High Voltage Power Supply for Soft Electrostatic Actuators*

*Shane K. Mitchell, Trent Martin, Christoph Keplinger**

**The electrical schematic and bill of materials for the HVPS**

Figure S1 shows the electrical schematic for the 10-channel HVPS, which was drawn in EAGLE software (version 9.6.2). The components displayed in the schematic are listed in Table S1. The schematic is divided into four sections: the battery and power, the buck converter and feedback for the PID controller, the teensy microcontroller, and the 10 channels for actuation.

*Battery and power:* The battery and power consists of the Pololu 5 V regulator as well as a 3.3 V regulator (LD1117S33TR). A single-pole-double-throw (SPDT) slider switch was used as the main power switch, connecting the battery pack to the Pololu 5 V regulator when in the on position. Another SPDT slider switch was used as the HV kill switch. A circuit was designed to illuminate a red LED when the voltage of the battery pack was below 7 V and required charging.

*Buck and feedback:* A standard buck-converter circuit was implemented to regulate the input power to the HV amplifier. A voltage divider created a low voltage replica of the output voltage from the HV amplifier. A voltage follower circuit was implemented at the voltage divider in order to ensure a high impedance measurement of the low voltage replica. The output of the voltage follower was sent to the microcontroller and this signal was used as feedback for the PID controller.

*Teensy Pinout:* Twenty analog output pins were used from the teensy microcontroller. Each of these pins was capable of generating a 3.3 V PWM signal with a variable duty cycle. Feedback from the voltage follower circuit was fed into an analog input pin on the microcontroller. Transient voltage

suppression (TVS) diodes were used at each of these analog input and output pins in order to ensure errant HV arcs were adequately suppressed without damaging the sensitive integrated circuits (ICs).

*Channel 1-10 control:* Two optocouplers in a half-bridge configuration create one channel of the HVPS as detailed in Figure 1 and Section 2.1 of the main text. The schematic in Figure S1 was repeated 10 times; the components labeled with an X were repeated 10 times, once for each channel. The gates of each channel were pulled-up to 3.3 V to reduce power draw from the analog pins of the microcontroller during high speed switching.

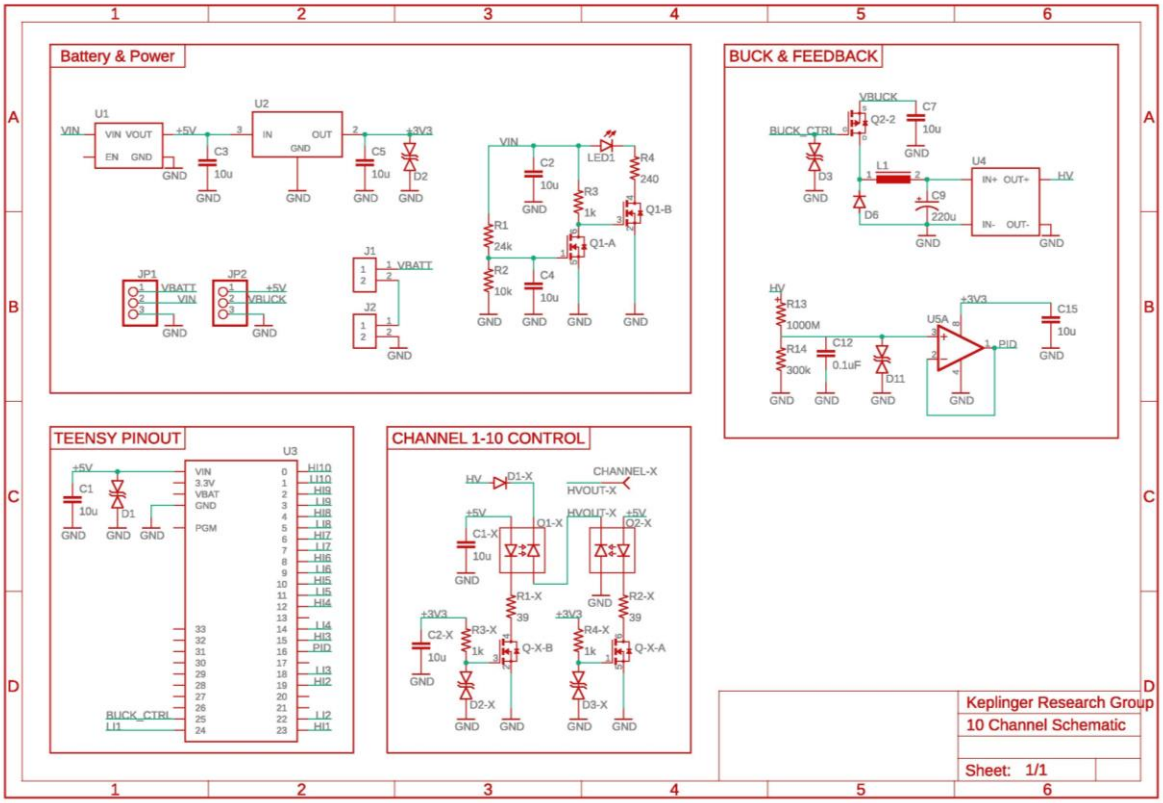


**Figure S1.** The complete electrical schematic for the 10-channel HVPS.

| Qty | Parts | Description | Device Part Number |
|---|---|---|---|
| 1 | C9 | 220 µF capacitor | TR3E227K016C0150 |
| 1 | D4 | diode for buck converter | STPS2L40U |
| 1 | LED1 | Red LED | SML-512UWT86 |
| 1 | C12 | 0.1 µF capacitor | C0402C104Z4VAC7867 |
| 27 | C1-X, C2-X, C1 – C5, C7, C15 | 10 µF capacitor | C0402C106M9PAC7867 |
| 1 | R13 | 1 GΩ resistor for voltage feedback | OHMITE104E |
| 1 | R4 | 240 kΩ resistor | ERJ-PA2F2400X |
| 21 | R3, R3-X, R4-X | 1 kΩ resistor | ERJ-PA2F1001X |
| 1 | R2 | 10 kΩ resistor | ERJ-PA2F1002X |
| 1 | R1 | 24 kΩ resistor | ERJ-PA2F2402X |
| 1 | R14 | 300 kΩ resistor | ERJ-PA2F3003X |
| 20 | R1-X, R2-X | 39 Ω resistor | ERJ-PA2F3900X |
| 1 | U1 | 5 V regulator | D24V50F5 |
| 1 | L1 | 10 µH inductor | DR127-100-R |
| 1 | Q2-2 | N/P dual MOSFET | FDS8858CZ |
| 1 | U2 | 3.3 V regulator | LD1117S33TR |
| 1 | U4 | HV amplifier | PICO-5VV10 |
| 1 | U3 | Teensy 4.0 | TEENSY40 |
| 1 | U5A | Operational amplifier | TLC272BCDR |
| 2 | J1, J2 | JST connector - female | S2B-PH-K-S(LF)(SN) |
| 10 | CHANNEL-X (HVOUT-X) | 3 mm circular pad for HV plugs | 3MM_PAD |
| 10 | D1-X | HV diodes | X150FF3 |
| 11 | Q-X-A (or -B) | Dual N-channel MOSFET | NDC7002N |
| 23 | D2, D3, D11, D2-X, D3-X | 3.3 V TVS diode | SP4020-01FTG-C |
| 20 | O1-X, O2-X | Optical diode | OZ100SG |
| 20 | O1-X, O2-X | IR LED | L1IZ-0940000000000 |
| 1 | D1 | TVS DIODE 5V 12V | GG040205100N2P |
| 2 | JP1, JP2 | SPDT switch | MSS-102545-14A-D |

**Table S1**: The bill of materials for the 10-channel HVPS. The parts column reflects the numbering system used for the electrical schematic in Figure S1.

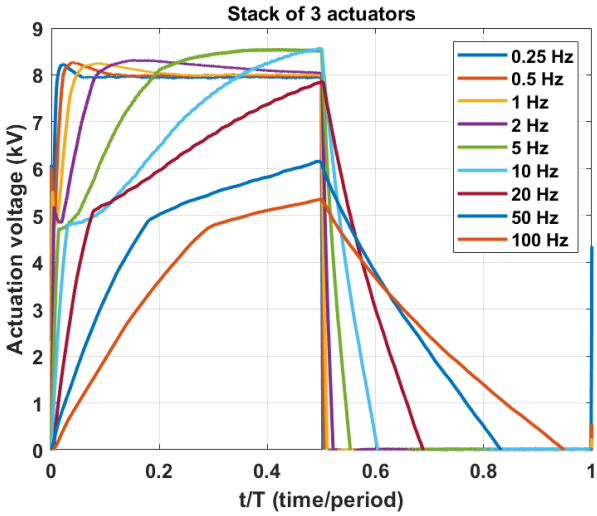


**Figure S2:** Actuation voltage of a stack of 3 actuators (maximum capacitance was 1.5 nF) as a function of time normalized to the actuation period. The desired actuation voltage was a step up to 8 kV step when $t/T < 0.5$ and a step down to 0 kV when $t/T \geq 0.5$. The actuation voltage reached 8 kV at actuation frequencies as high as 20 Hz, and reached 5.4 kV at 100 Hz.

**Movie S1.** Individually addressing actuators with different driving signals using the 10-channel HVPS

**Movie S2.** A 2x5 array of HASEL actuators driven by the 10-channel HVPS

**Movie S3.** A soft robotic inchworm powered by the 10-channel HVPS