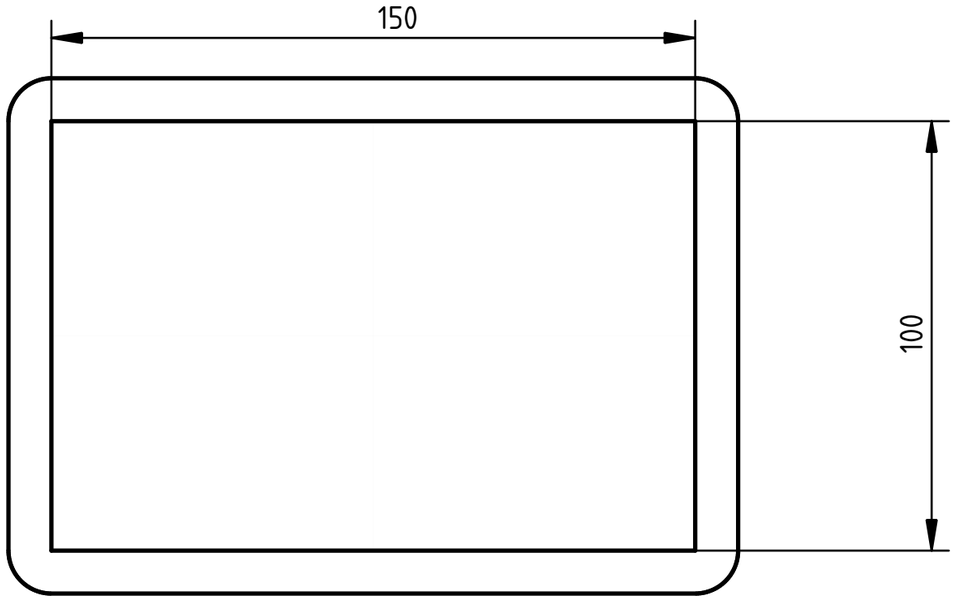

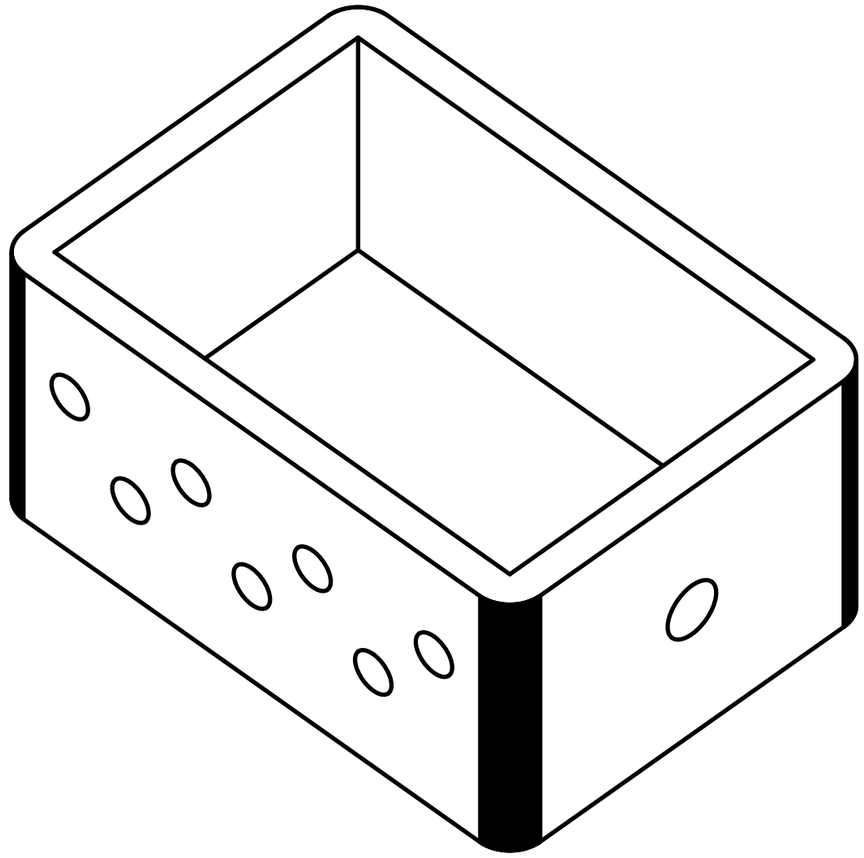

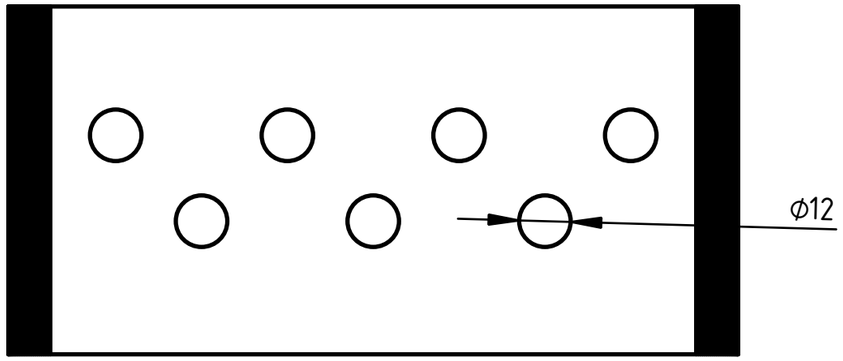

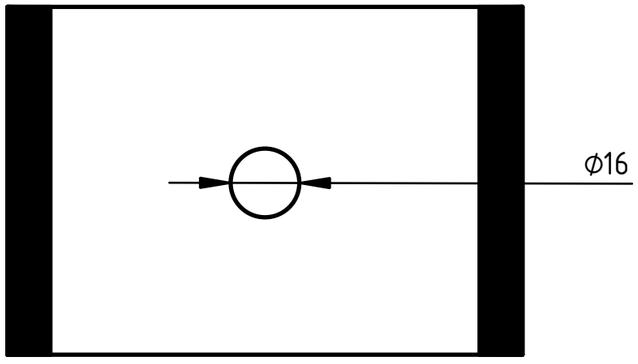

Author: AUTHOR NAME Appr.: APPROVER NAME	Legal owner: OWNER NAME	Scale: M x:x Toler.: +/- ?	Sheet: 99 of 99 Size: A3
TITLE: FreeCAD		Part material: PM Part number: PN	
		Drawing no.: DN	
Document type: Mechanical assembly drawing		Date: YYYY-MM-DD	Revision: REV A

(R) DO NOT DUPLICATE THIS DRAWING TO THIRD PARTIES WITHOUT OWNER'S PERMISSION!