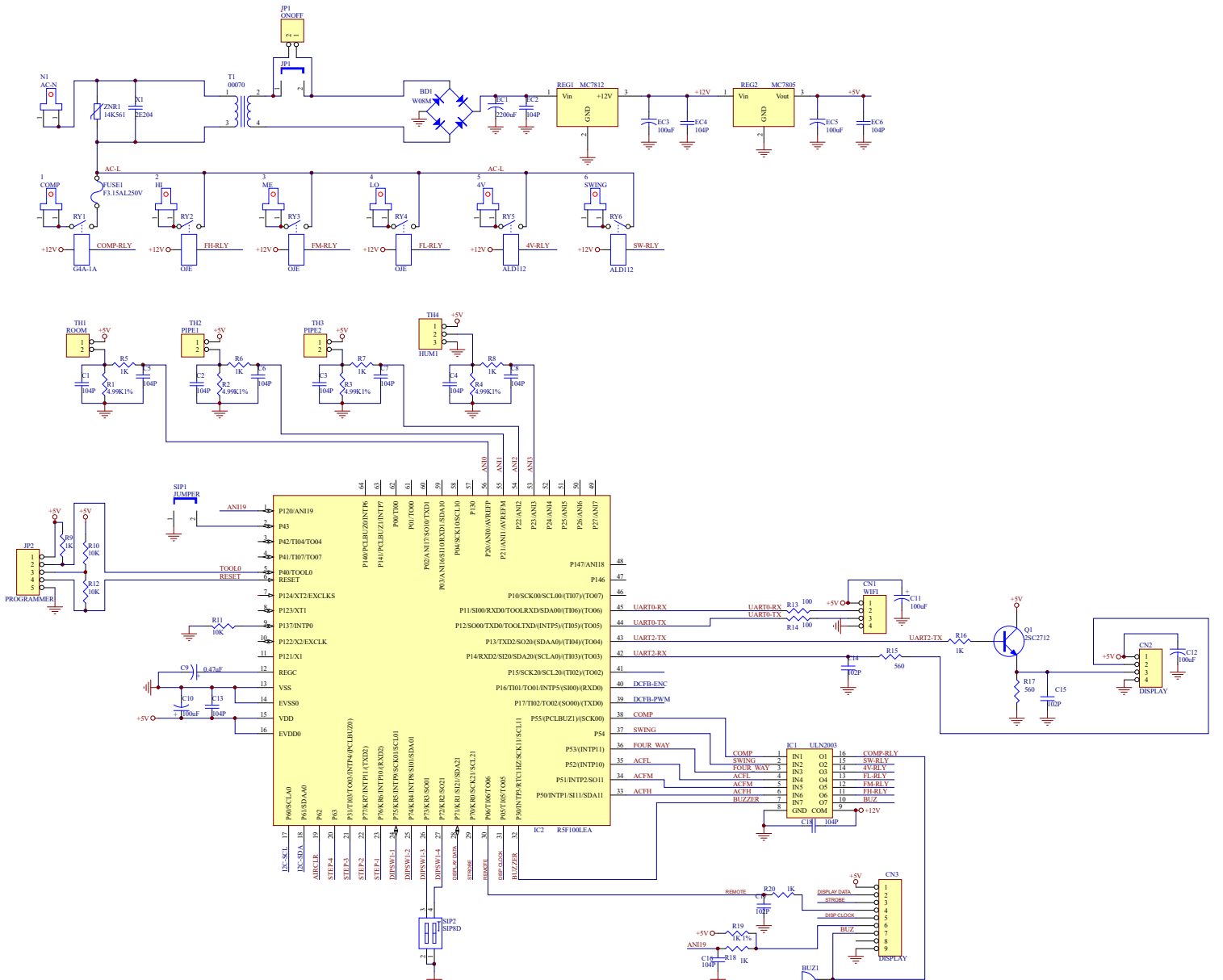

Title		
Size A2	Number	Revision
Date: 2018/9/26		Sheet of
File: X:\公司\硬件\renesas\AC39A.sch		Drawn By: