REV.	ECR/N NO./DESCRIPTION	DATE	DRAWN	CHECKED	APPROVE
B	RD13001	12/04'13	Jinjin.Tu	Vito	Barney
C	RD13001	02/17'14	Sam	Vito	Barney
D	RD13001	02/24'14	Sam	Vito	Barney

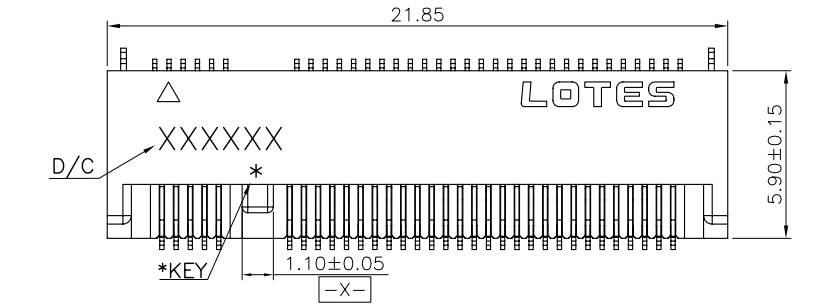

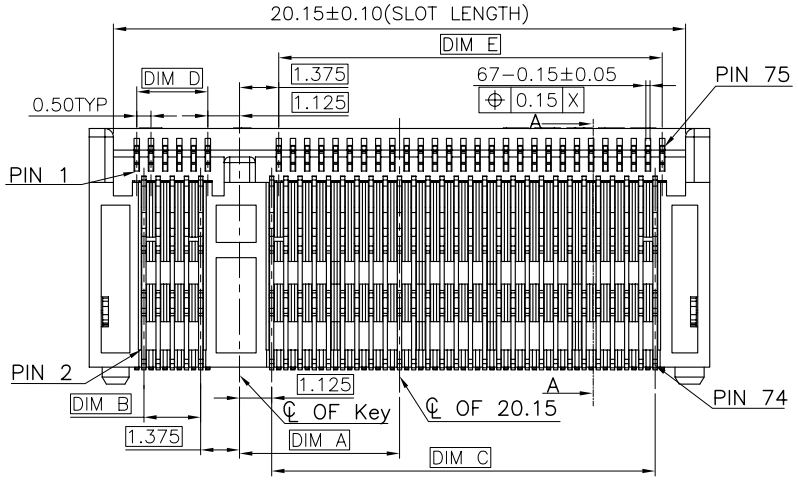

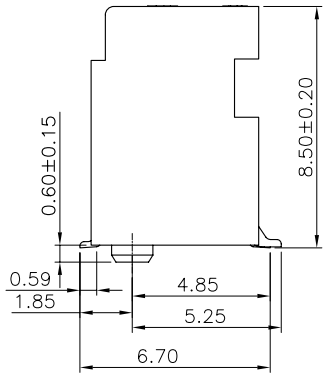

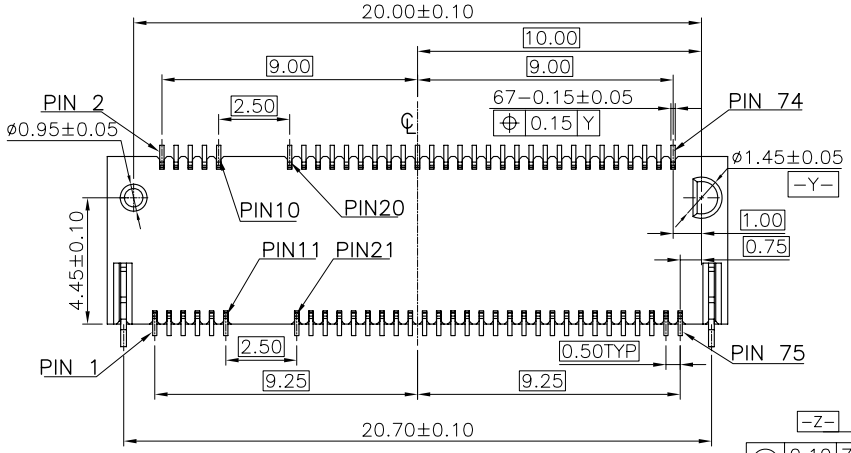

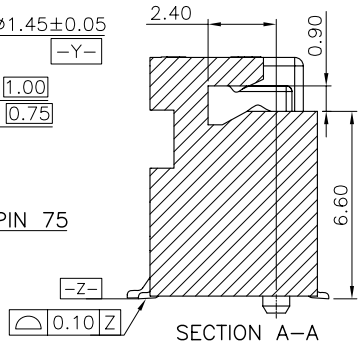

NOTES:

1. MATERIAL SPECIFICATION:
   1-1. HOUSING: LCP 30%GF,UL-94V0,BLACK.
   1-2. CONTACT:C7025-TM03.
   1-3. SMT TAB: S50C.
2. PLATING SPECIFICATION:
   2-1. CONTACT:
   50u" MIN.NICKEL UNDER PLATING OVER ALL.
   1u"Min PLATING ON SOLDER AREA.
   GOLD PLATING ON CONTACT AREA SEE TABLE.
   GOLD PLATING ON CONTACT AREA SEE TABLE.
   2-2. SMT TAB:
   50u" MIN. NICKEL UNDER PLATING OVER ALL .
   80u" MIN. MATTE TIN PLATING ON SOLDER AREA.
3. HF COMPLIANT, ROHS COMPLIANT.
4. DATE CODE: XXXXXX
   - DAY
   - WEEK
   - YEAR
5. MECHANICAL PERFORMANCE:
   5-1. DURABILITY: SEE TABLE
6. ELECTRICAL PERFORMANCE:
   6-1. CURRENT: 0.5A PER PIN.
   6-2. LLCR: INITIAL 55mΩ MAX. ; FINAL △LLCR=20mΩ MAX..
7. IR REFLOW:
   THE TEMPERATURE SHALL BE 260±5°C MAINTAINING 10±1 SECONDS.
8. PRODUCT NUMBER NOTE
   A P C I X X X X X-X X X X X
   - PACKING TYPE
   - PRODUCT SERIAL NUMBER
   - P:HF CONPLIANT
   - TYPE SERIAL NUMBER
   - PRODUCT TYPE
   - FINISHED PRODUCT

KEY No	DIM.A	DIM.B	DIM.C	DIM.D	DIM.E
A KEY	-6.625	1.00	14.50	1.50	14.50
B KEY	-5.625	2.00	13.50	2.50	13.50
E KEY	-2.625	5.00	10.50	5.50	10.50
M KEY	6.125	14.00	1.50	14.00	2.00

KEY NO	PART NO.	CONTACT PLATING	DURABILITY
M-KEY	APCI0096-P002A	G/F MIN. GOLD	25 CYCLES
	APCI0096-P001A	10u" MIN. GOLD	25 CYCLES
E-KEY	APCI0095-P002A	G/F MIN. GOLD	25 CYCLES
	APCI0095-P001A	10u" MIN. GOLD	25 CYCLES
A-KEY	APCI0094-P002A	G/F MIN. GOLD	25 CYCLES
	APCI0094-P001A	10u" MIN. GOLD	25 CYCLES
B-KEY	APCI0087-P002A	G/F MIN. GOLD	25 CYCLES
	APCI0087-P001A	10u" MIN. GOLD	25 CYCLES

GENERAL TOLERANCES UNLESS SPECIFIED	
.X ± 0.35	X.° ± 3°
.XX ± 0.25	.X° ± 2°
.XXX ± 0.15	.XX° ± 1°

CUSTOMER DRAWING

SIZE	UNITS
A4	MM[~~INCH~~]

PART NO.: SEE TABLE

APPROVED BY: Barney 11/08'13

CHECKED BY: Vito 11/08'13

DRAWN BY: Jinjin.Tu 11/08'13

LOTES

TITLE: 0.5 PITCH M.2 8.5H TOP MOUNT-DOUBLE SIDED

DWG NO.: AP-APCI0087-P

SHEET	SCALE	REV
1 / 4	4 : 1	D

Assembly stack height schematic diagram

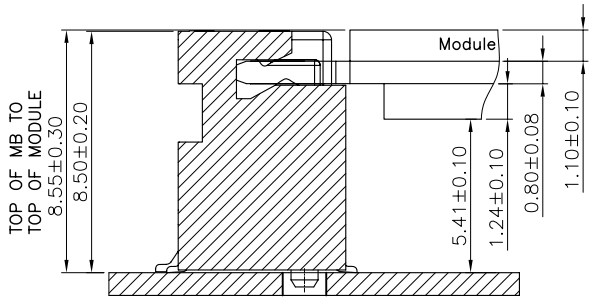

Stack–up Top Mount Double Sided Module for 1.20 max top–side component height

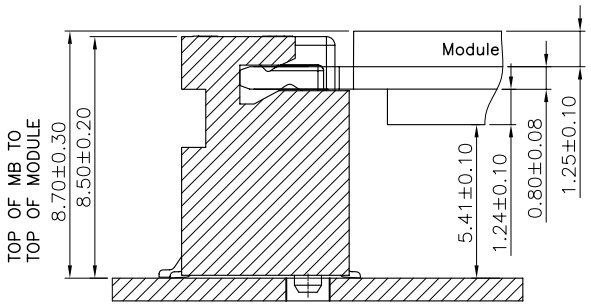

Stack–up Top Mount Double Sided Module for 1.35 max top–side component height

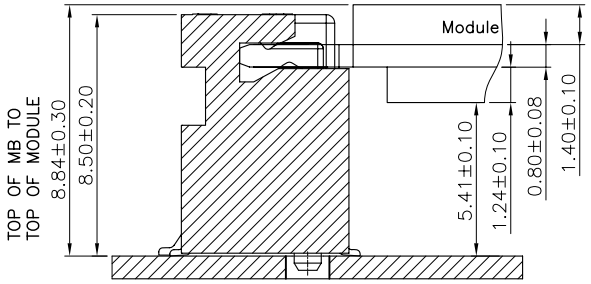

Stack–up Top Mount Double Sided Module for 1.35 max top–side component height

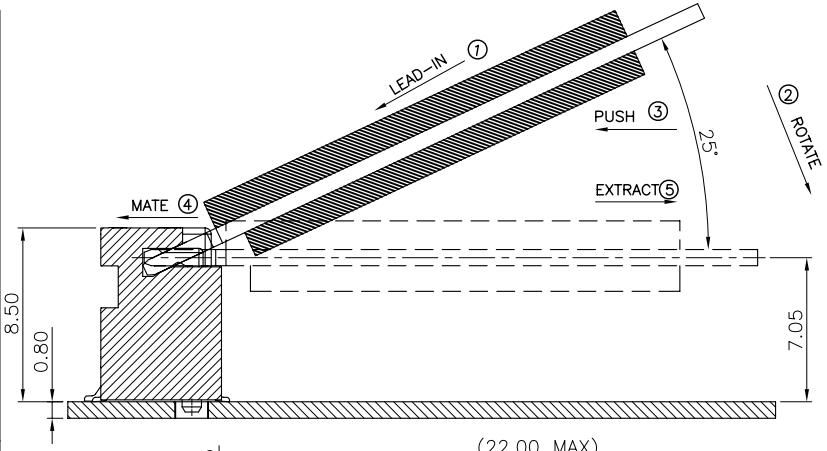

HOW TO MATE AND EXTRACT

MATE: ①
EXTRACT: ⑤
NOTE:Mating force will generate from step ~~3 to step 4.~~ ④

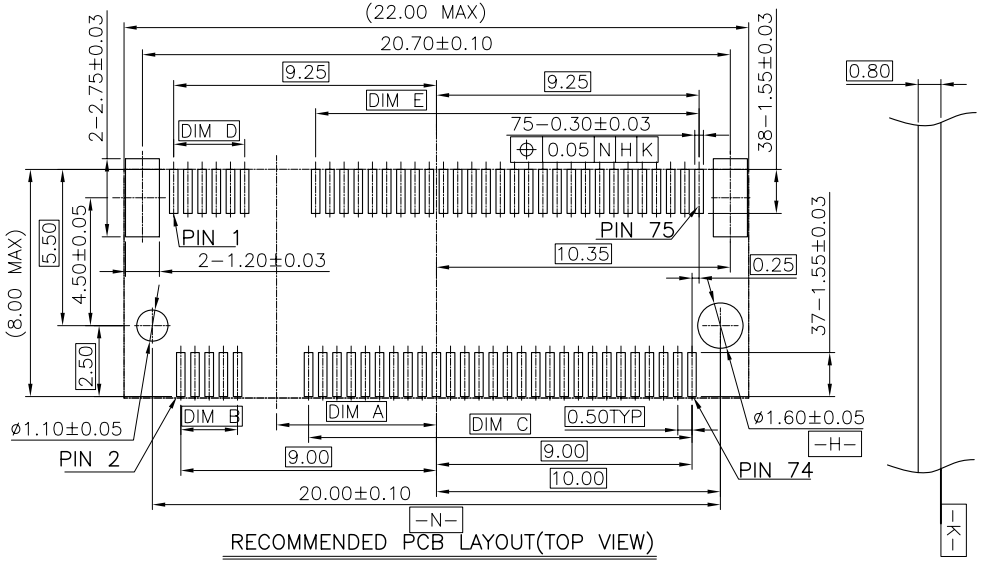

RECOMMENDED PCB LAYOUT(TOP VIEW)

DEFAULT TOLERANCE ±0.05MM

GENERAL TOLERANCES UNLESS SPECIFIED		PART NO. SEE TABLE	LOTES
.X ± 0.35	X.°± 3°		
.XX ± 0.25	.X°± 2°	APPROVED BY Barney 11/08'13	TITLE 0.5 PITCH M.2 8.5H TOP MOUNT-DOUBLE SIDED
.XXX ±0.15	.XX°±1°		
CUSTOMER DRAWING		CHECKED BY Vito 11/08'13	DWG NO. AP-APCI0087-P
SIZE A4	UNITS MM[~~INCH~~]	DRAWN BY Jinjin.Tu 11/08'13	SHEET 2 / 4 · SCALE 4 : 1 · REV D

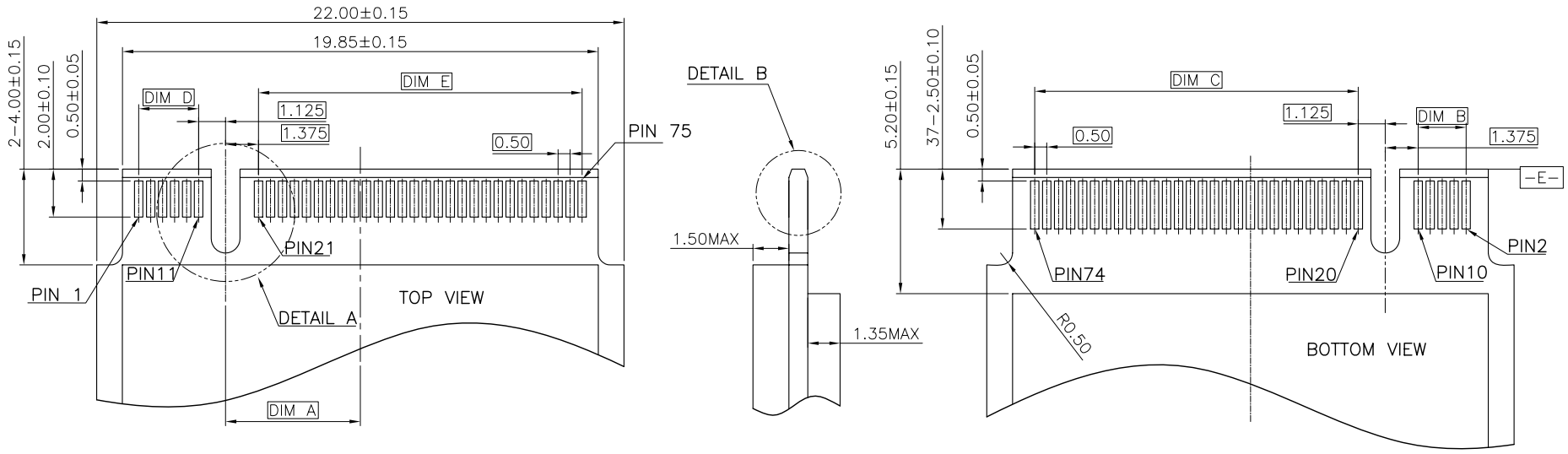

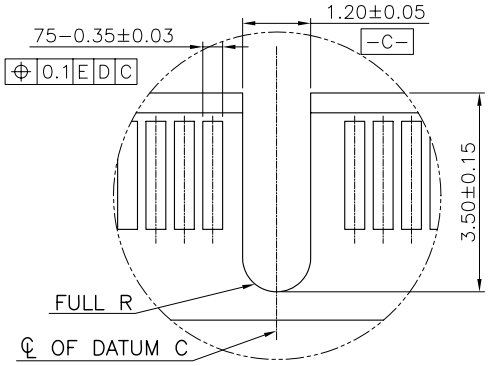

DETAIL A
SCALE 2:1

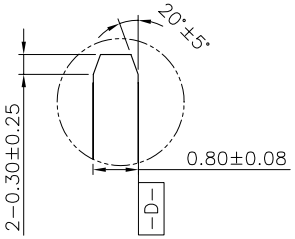

DETAIL B
SCALE 2:1

KEY No	DIM.A	DIM.B	DIM.C	DIM.D	DIM.E
A KEY	−6.625	1.00	14.50	1.50	14.50
B KEY	−5.625	2.00	13.50	2.50	13.50
E KEY	−2.625	5.00	10.50	5.50	10.50
M KEY	6.125	14.00	1.50	14.00	2.00

GENERAL TOLERANCES UNLESS SPECIFIED		PART NO. SEE TABLE	LOTES
.X ± 0.35	X.° ± 3°		
.XX ± 0.25	.X° ± 2°	APPROVED BY Barney 11/08'13	TITLE 0.5 PITCH M.2 8.5H TOP MOUNT-DOUBLE SIDED
.XXX ± 0.15	.XX° ± 1°		
CUSTOMER DRAWING		CHECKED BY Vito 11/08'13	DWG NO. AP-APCI0087-P
SIZE A4	UNITS MM[INCH]	DRAWN BY Jinjin.Tu 11/08'13	SHEET 3 / 4 · SCALE 4 : 1 · REV D

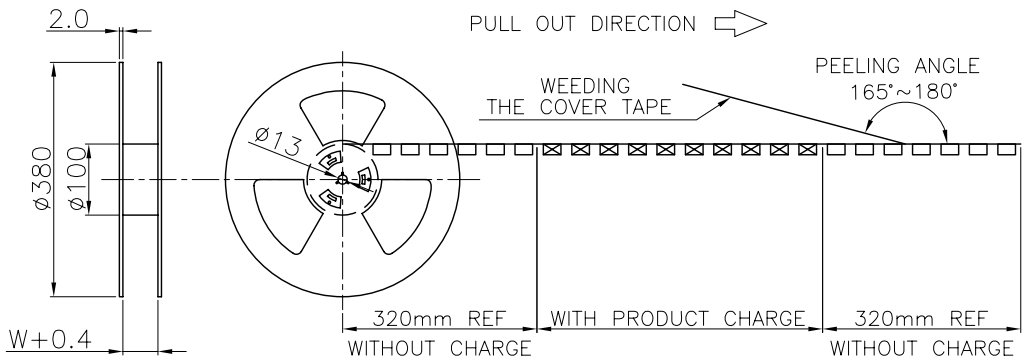

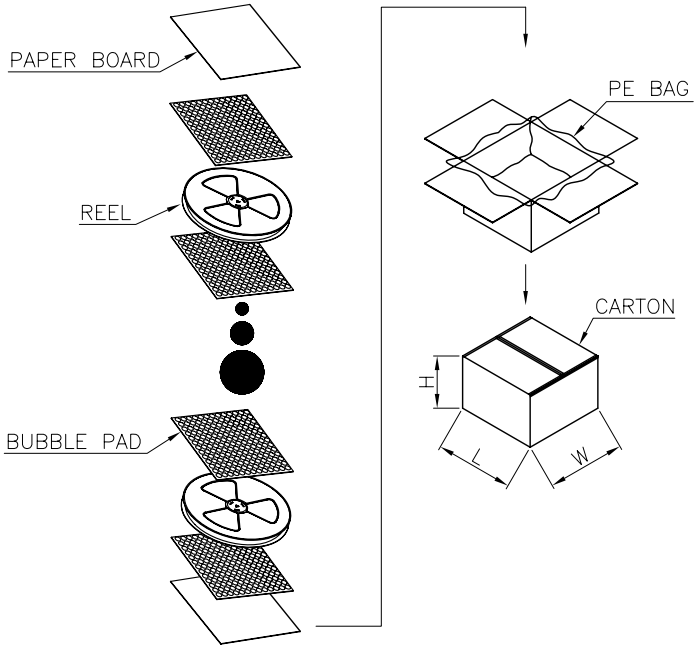

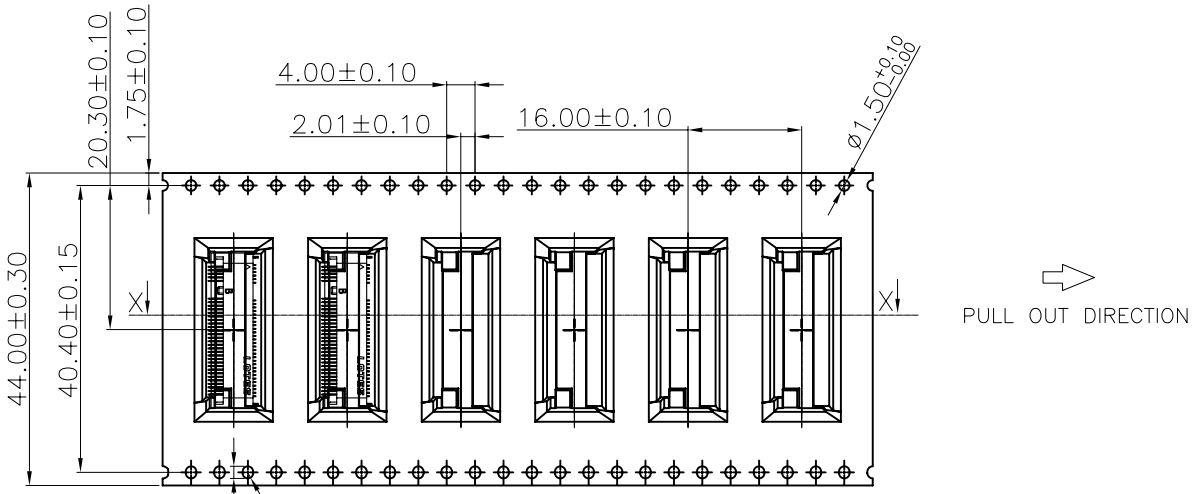

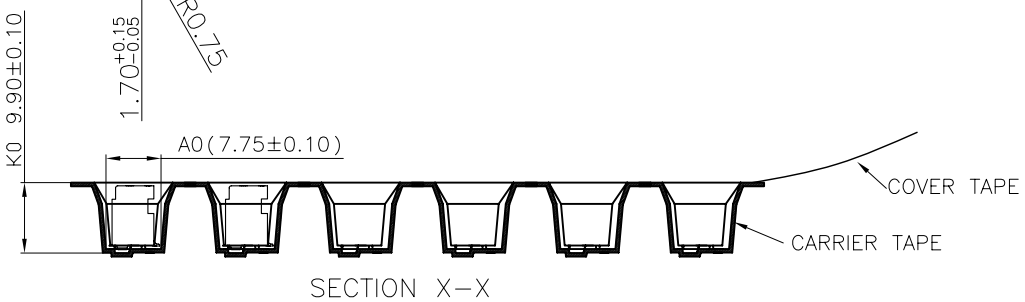

550	3300
PCS/REEL	PCS/CARTON

GENERAL TOLERANCES UNLESS SPECIFIED		PART NO. SEE TABLE	LOTES
.X ± 0.35	X.°± 3°		
.XX ± 0.25	.X°± 2°	APPROVED BY Barney 11/13'13	TITLE 0.5 PITCH M.2 8.5H TOP MOUNT-DOUBLE SIDED
.XXX ±0.15	.XX°±1°		
CUSTOMER DRAWING		CHECKED BY Vito 11/13'13	DWG NO. AP-APCI0087-P
SIZE A4	UNITS MM[INCH]	DRAWN BY Jinjin.Tu 11/13'13	SHEET 4 / 4 · SCALE 1 : 1 · REV D