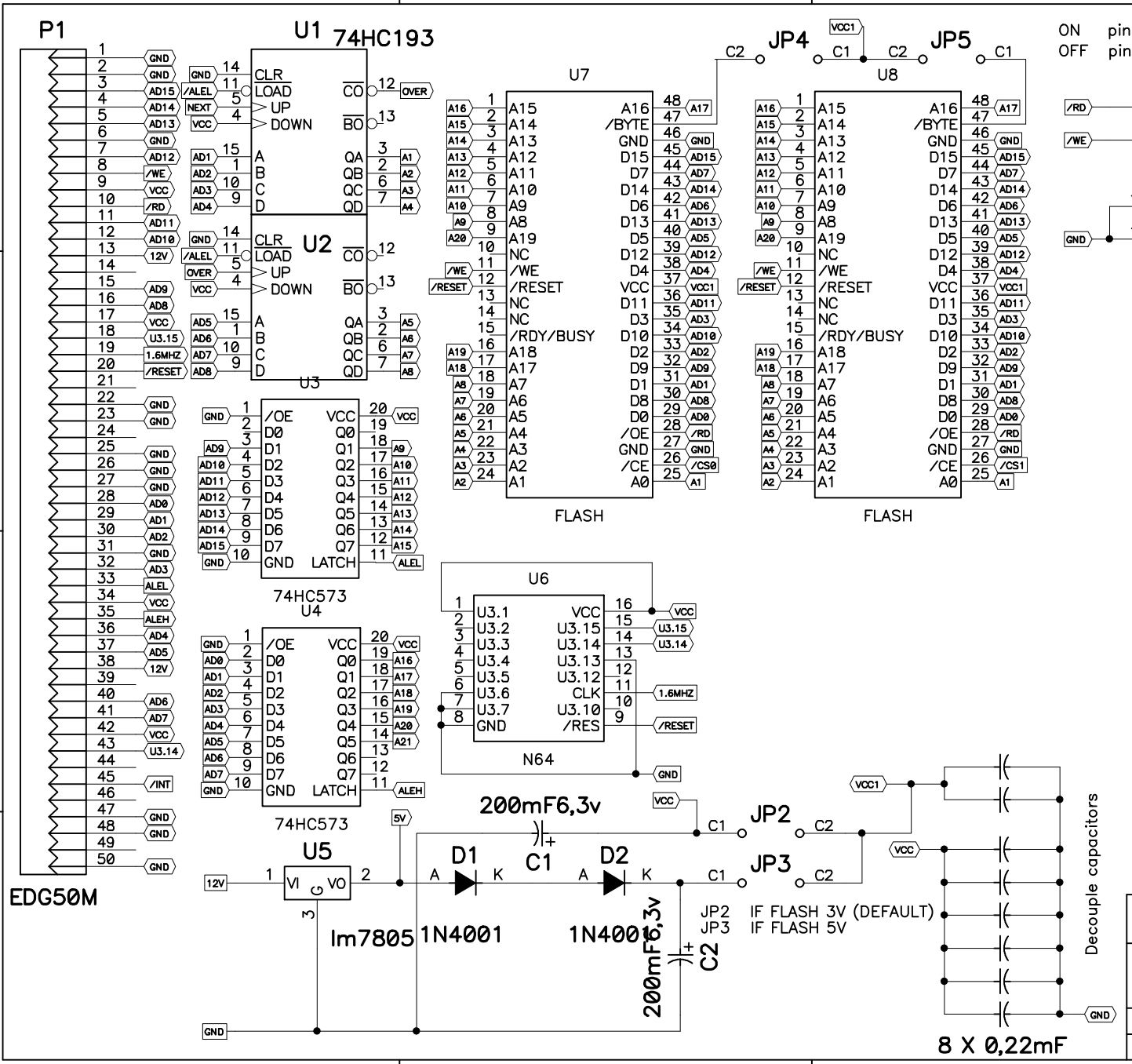

ON pin47 /BYTE
OFF pin47 VCCOUT

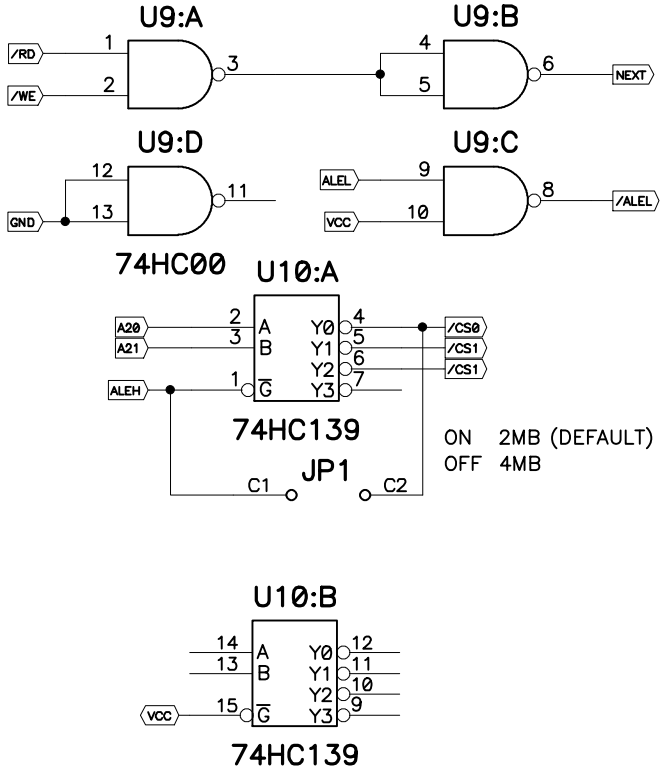

ON 2MB (DEFAULT)
OFF 4MB

Title		
Size A4	Number	Rev
Date	Drawn by	
Filename	Sheet of	