External Interrupts

This tutorial will demonstrate how to configure the GPIO that is connected to the user button as External Interrupt (EXTI) with falling edge trigger.

After this tutorial you will be able to:

- Create and configure STM32CubeMX project and generate initialization code
- Program and use interrupt to toggle LED on Nucleo-L476RG board

Hardware:

- Nucleo-L476RG board(64-pin),available at: www.st.com/en/evaluation-tools/nucleo-l476rg.html
- Standard-A -to- Mini USB cable

Literature:

- STM32L476xx Datasheet
- UM1724 User manual STM32 Nucleo-64 boards
- UM1884 Description of STM32L4/L4+ HAL and low-layer drivers
- UM1718 User manual STM32CubeMX for STM32 configuration and initialization C code generation

Stages

- 1: Create New Project with STM32CubeMX
- 2: Pinout Configuration
- 3: Clock Configuration
- 4: Configure project and Generate Source Code
- 5: Edit main.c
- 6: Build Project
- 7: Debug the Project

1: CREATE NEW PROJECT USING STM32CUBEMX:

- Open STM32CubeIDE
- Click *File -> New -> STM32 Project*. A target selection window will open.
- From Board Selector type *Nucleo-L476RG.* Select the board and click next.
- Name your project “Nucleo_L476RG_Button_Interrupt” and click Finish.
- Answer “Yes” to “Initialize all peripherals with their default mode?” popup.

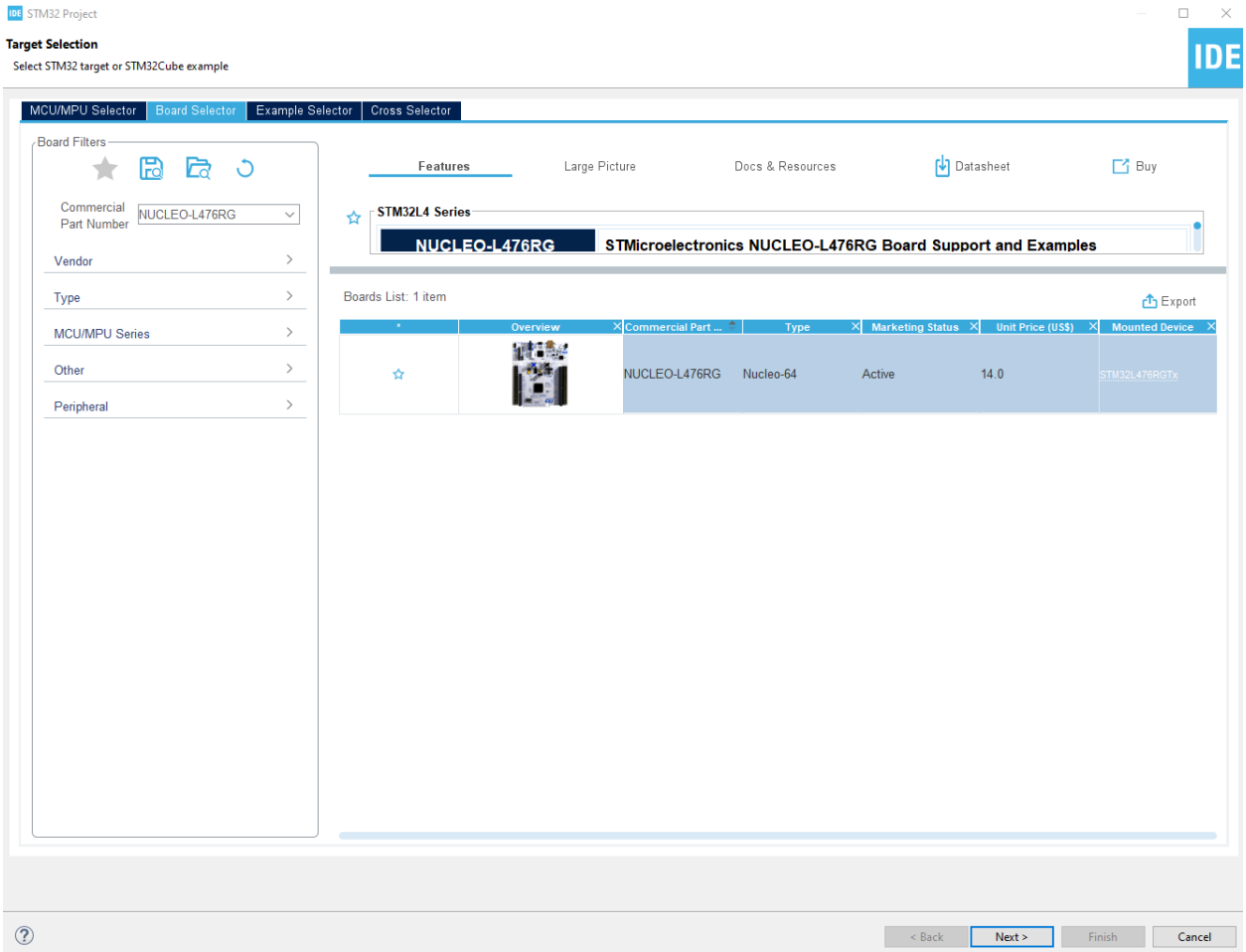

2: PINOUT CONFIGURATION

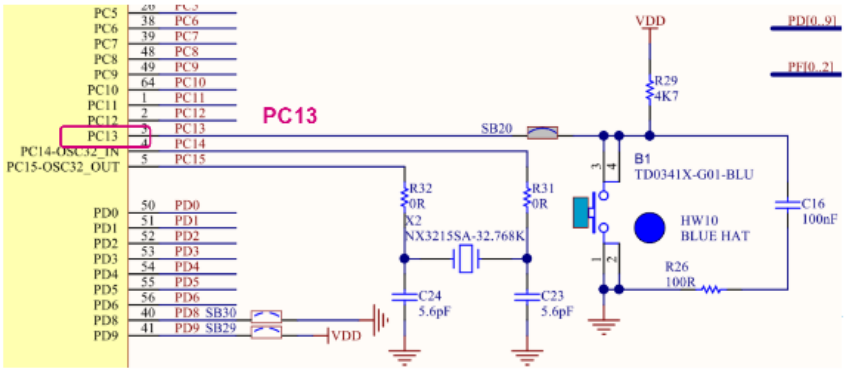

From the image above we can see user button B1 is connected to PC13. In STM32CubeMX right click PC13 and select GPIO_EXTI13. This will configure it as an external interrupt.

We also want to verify PA5 is set to GPIO_output.

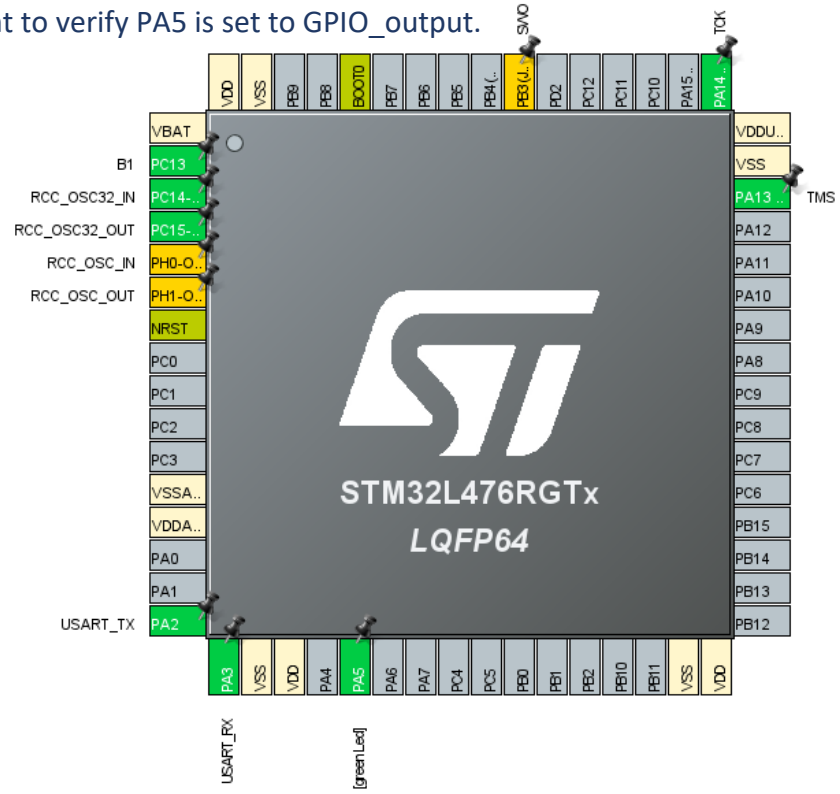

Under System Core-> GPIO, select PC13. Change the GPIO mode to “External Interrupt Mode with Falling edge trigger detection.” Then under the NVIC tab, check enable for “EXTI line[15:10] interrupts.”

3. CLOCK CONFIGURATION

In the clock configuration tab you can see that STM32CubeMX automatically configures the internal oscillator in the clock system with PLL @80MHz. The HIS is selected as the PLL source and the PLLCLK is selected in the system clock mux.

HCLK is set to 80 MHz.

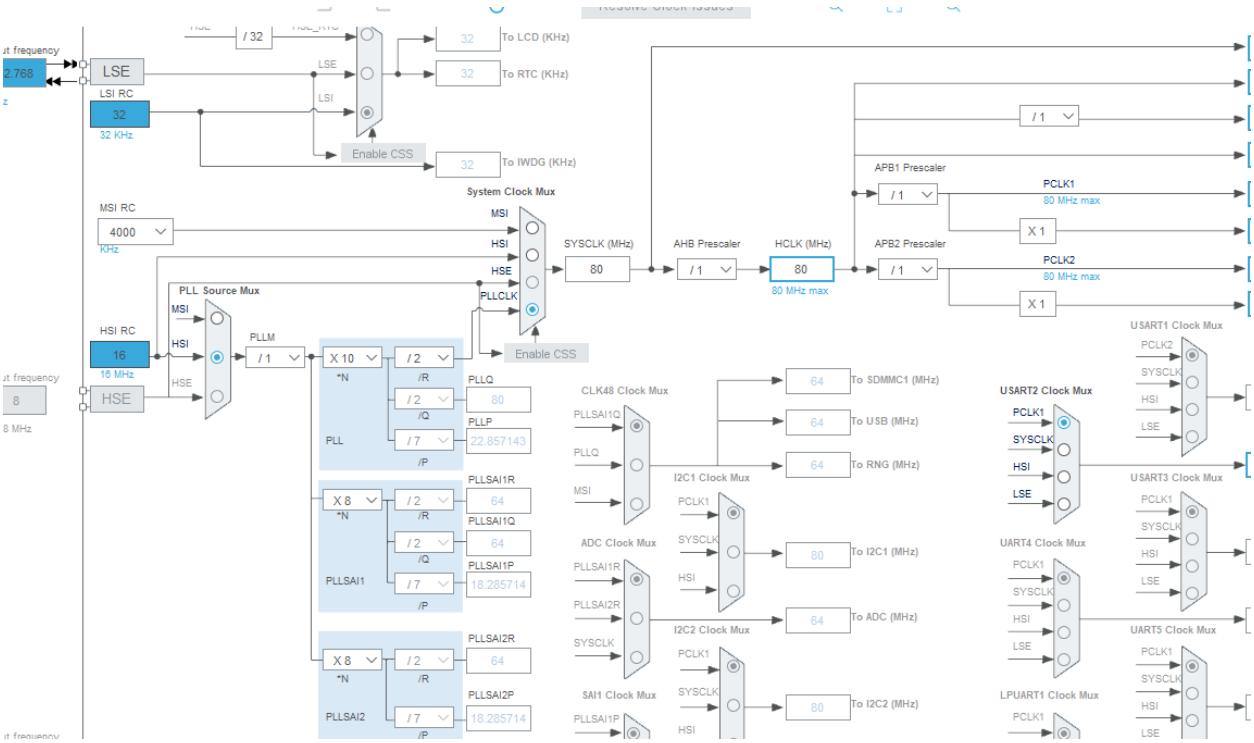

4: GENERATE CODE

We can now generate code. Click File->Save. You will be asked to generate code, press yes.

Under the project explorer navigate *to Core->Src->main.c*.

We can see that there was code automatically generated for us using STM32CubeMX.

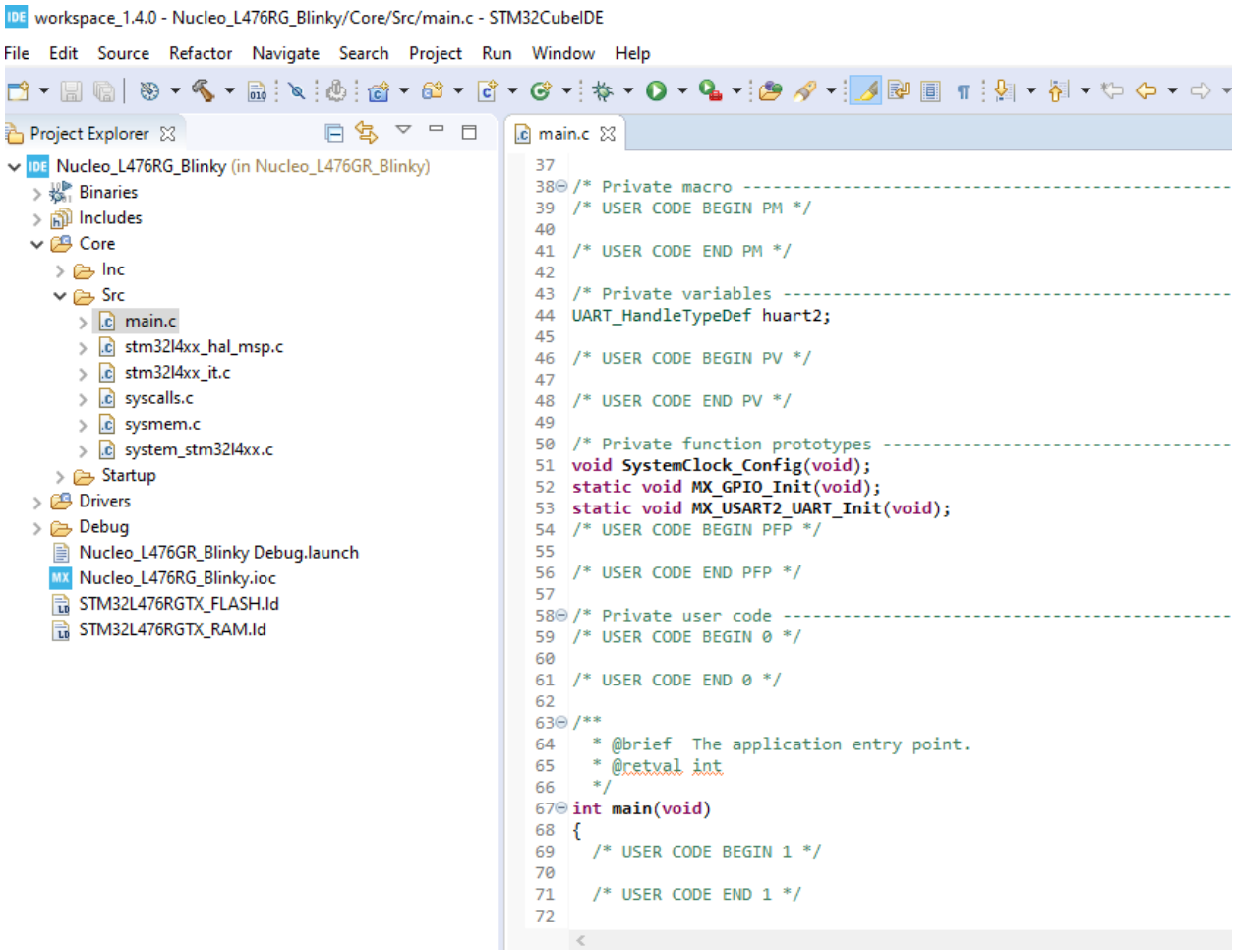

5: EDIT main.c

We can add code between the “User code begin 4” and “User code end 4” lines. When the button is pushed, the LED will toggle.

```
}

/* USER CODE BEGIN 4 */
void EXTI15_10_IRQHandler(void) {
  __HAL_GPIO_EXTI_CLEAR_IT(B1_Pin);
  HAL_GPIO_TogglePin(LD2_GPIO_Port, LD2_Pin);
}
/* USER CODE END 4 */
```

NOTE: This function may already be defined in *Core->Src->stm32l4xx_it.c.* If so, during compilation an error will be thrown. The code within the function may either be defined in main.c, or in stm32l4xx_it.c where the function was generated for you. To avoid the error, make sure to define this function only once.

6: BUILD THE PROJECT

Connect your USB cable from the computer to your Nucleo Board. Right click the project from the project explorer and click “Build project” to compile the project.

7: DEBUG THE PROJECT

Click on the Debug toolbar icon to start the debug session. Another way to debug is to *Run->Debug* .

Click the Resume icon to continue the execution.

We can now see the green LED(LD2) toggling on the Nucleo-L476RG board when pushing the blue user button.