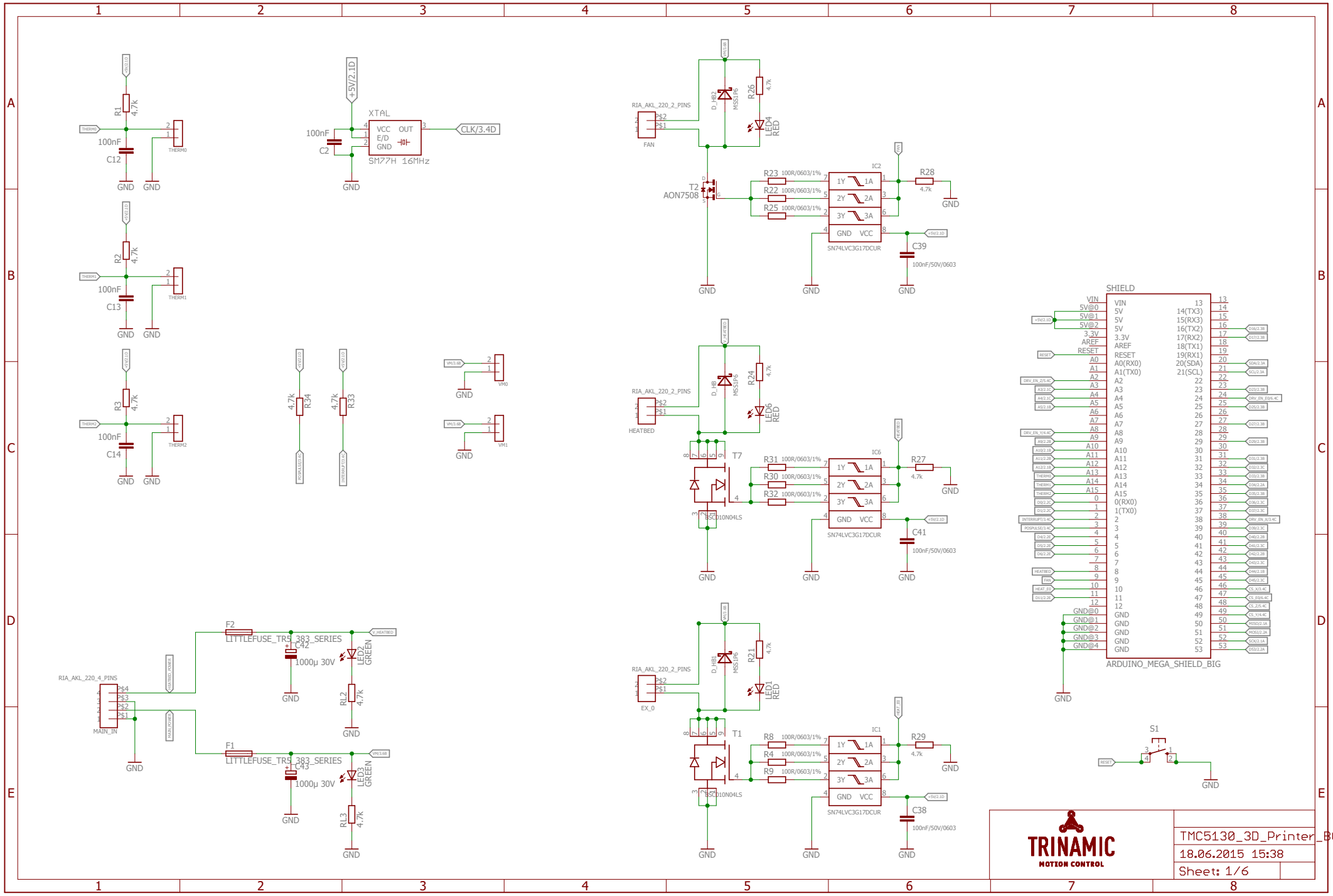
R1 4.7k
THERM0
100nF
C12
THERM0
GND GND
R2 4.7k
THERM1
100nF
C13
THERM1
GND GND
R3 4.7k
THERM2
100nF
C14
THERM2
GND GND
+5V/2.1D
XTAL
100nF
C2
VCC OUT
E/D
GND
SM77H 16MHz
CLK/3.4D
GND
4.7k R34
4.7k R33
VM/3.6B
VM0
VM1
RIA_AKL_220_4_PINS
MAIN_IN
F2
LITTLEFUSE_TR5_383_SERIES
C42
1000µ 30V
LED2 GREEN
RL2 4.7k
F1
LITTLEFUSE_TR5_383_SERIES
C43
1000µ 30V
LED3 GREEN
RL3 4.7k
RIA_AKL_220_2_PINS
FAN
D_HB2
MSS1P6
R26 4.7k
LED4 RED
T2
AON7508
R23 100R/0603/1%
R22 100R/0603/1%
R25 100R/0603/1%
IC2
SN74LVC3G17DCUR
R28 4.7k
C39
100nF/50V/0603
HEATBED
D_HB
R24 4.7k
LED6 RED
T7
BSC010N04LS
R31 100R/0603/1%
R30 100R/0603/1%
R32 100R/0603/1%
IC6
SN74LVC3G17DCUR
R27 4.7k
C41
100nF/50V/0603
EX_0
D_HB1
MSS1P6
R21 4.7k
LED1 RED
T1
BSC010N04LS
R8 100R/0603/1%
R4 100R/0603/1%
R9 100R/0603/1%
IC1
SN74LVC3G17DCUR
R29 4.7k
C38
100nF/50V/0603
SHIELD
ARDUINO_MEGA_SHIELD_BIG
S1
RESET
GND
TRINAMIC
MOTION CONTROL
TMC5130_3D_Printer_BOARD_V_2
18.06.2015 15:38
Sheet: 1/6

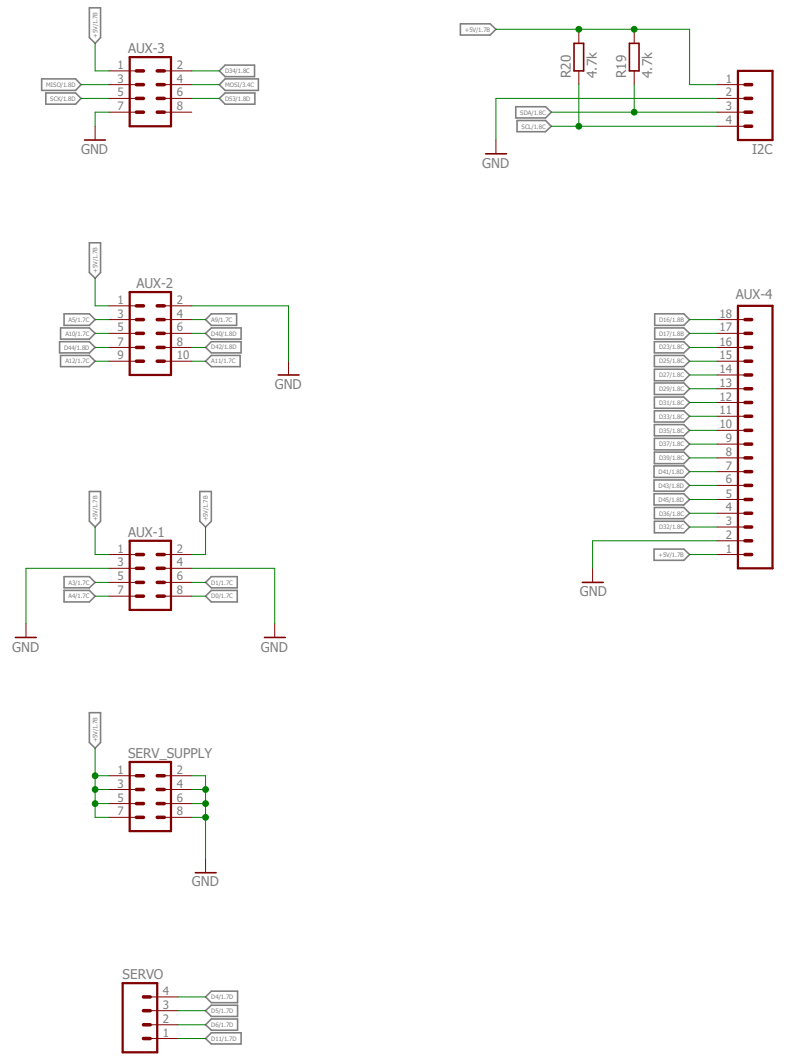

TMC5130_3D_Printer_BOARD_V_2

18.06.2015 15:38

Sheet: 2/6

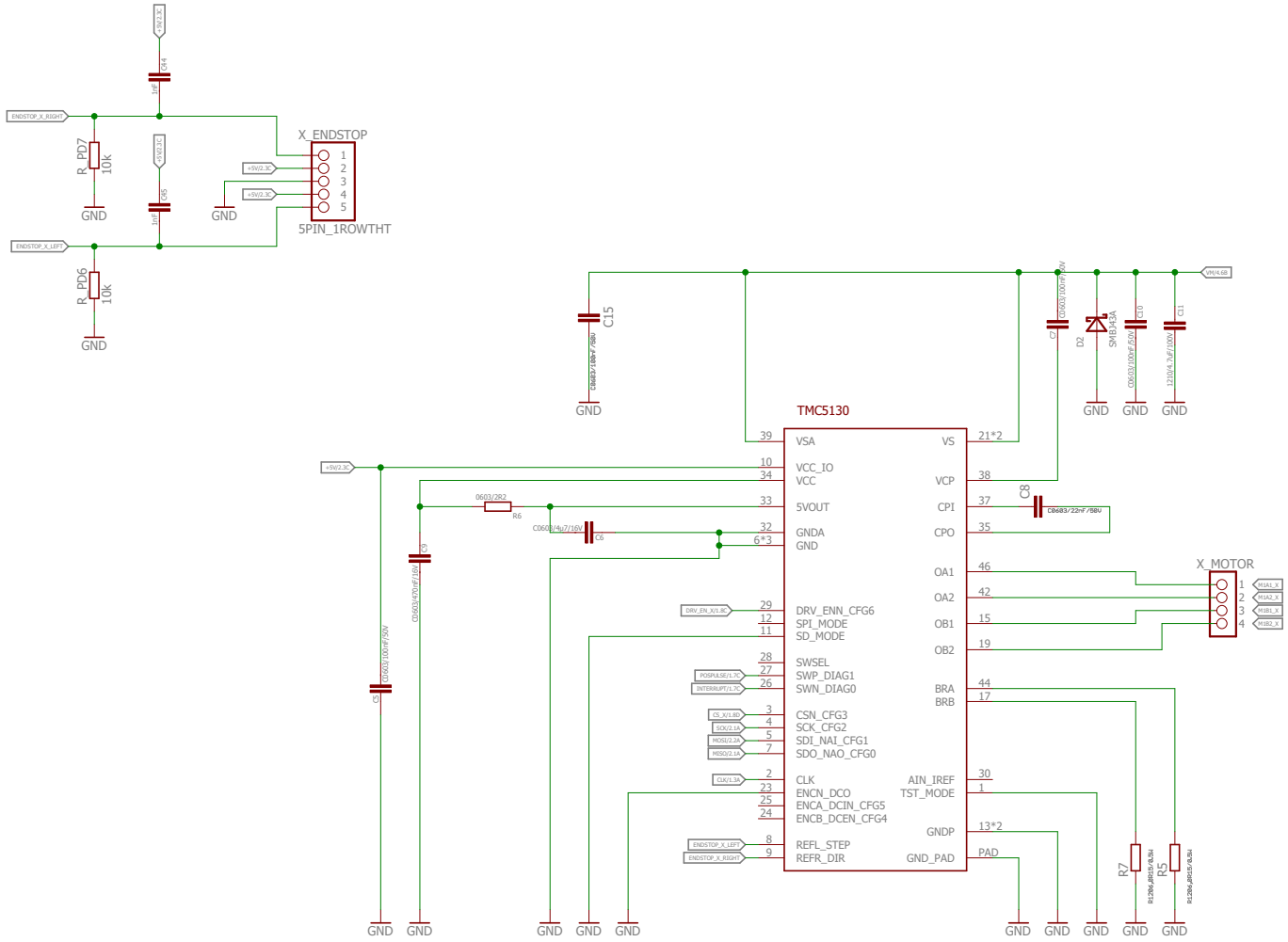

TRINAMIC
MOTION CONTROL

TMC5130_3D_Printer_BOARD_V_2

18.06.2015 15:38

Sheet: 3/6

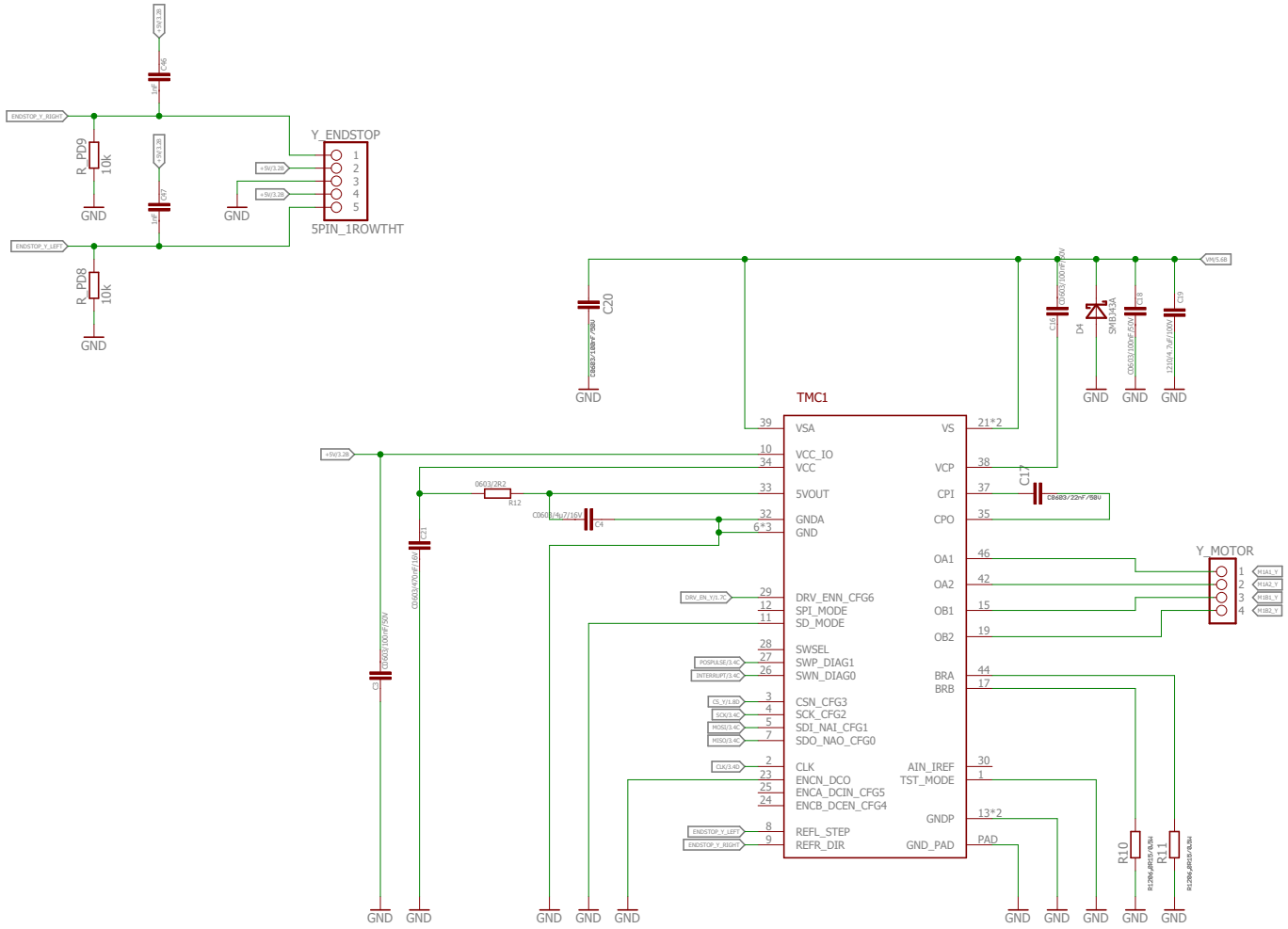

TRINAMIC
MOTION CONTROL

TMC5130_3D_Printer_BOARD_V_2

18.06.2015 15:38

Sheet: 4/6

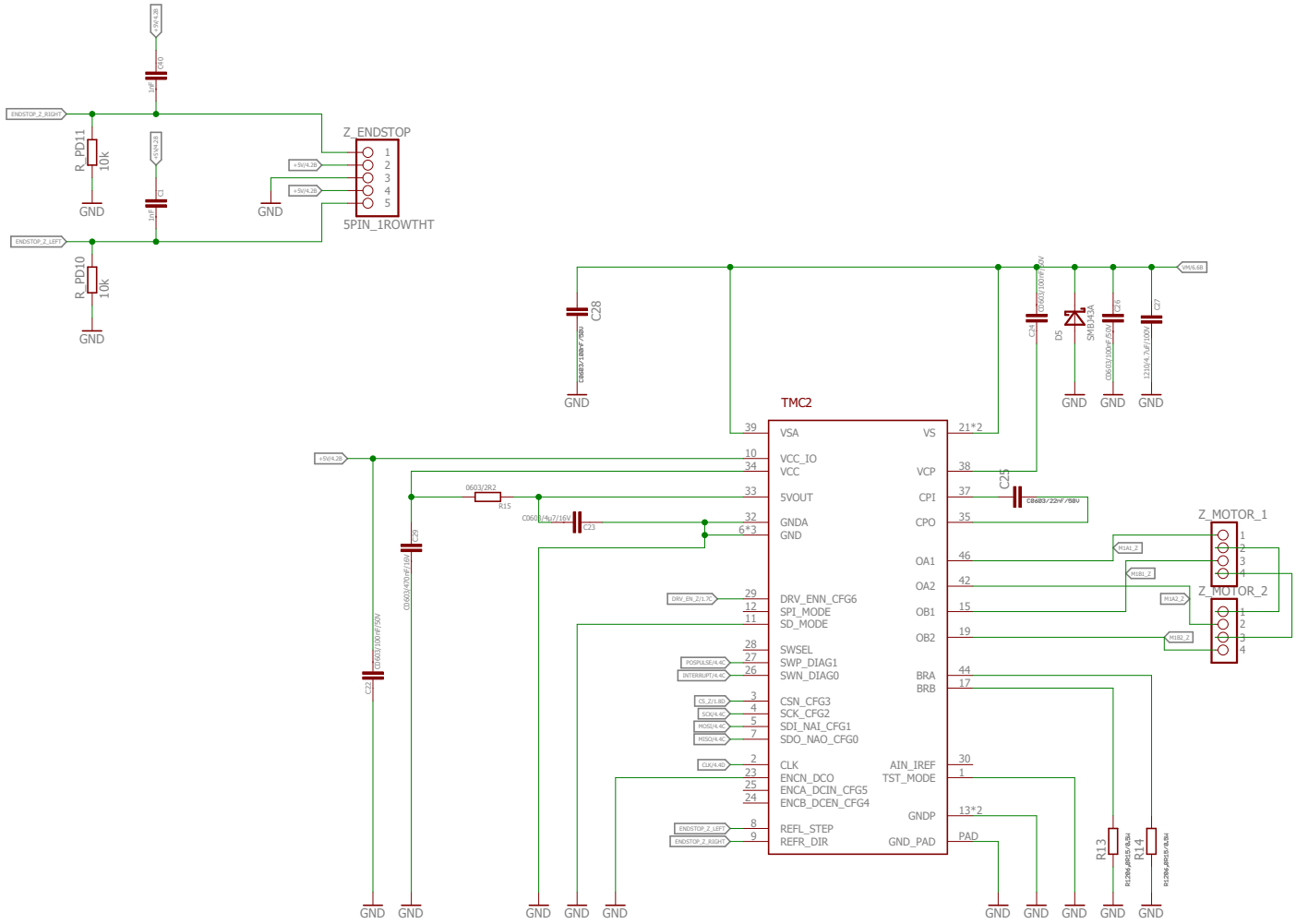

TRINAMIC
MOTION CONTROL

TMC5130_3D_Printer_BOARD_V_2

18.06.2015 15:38

Sheet: 5/6

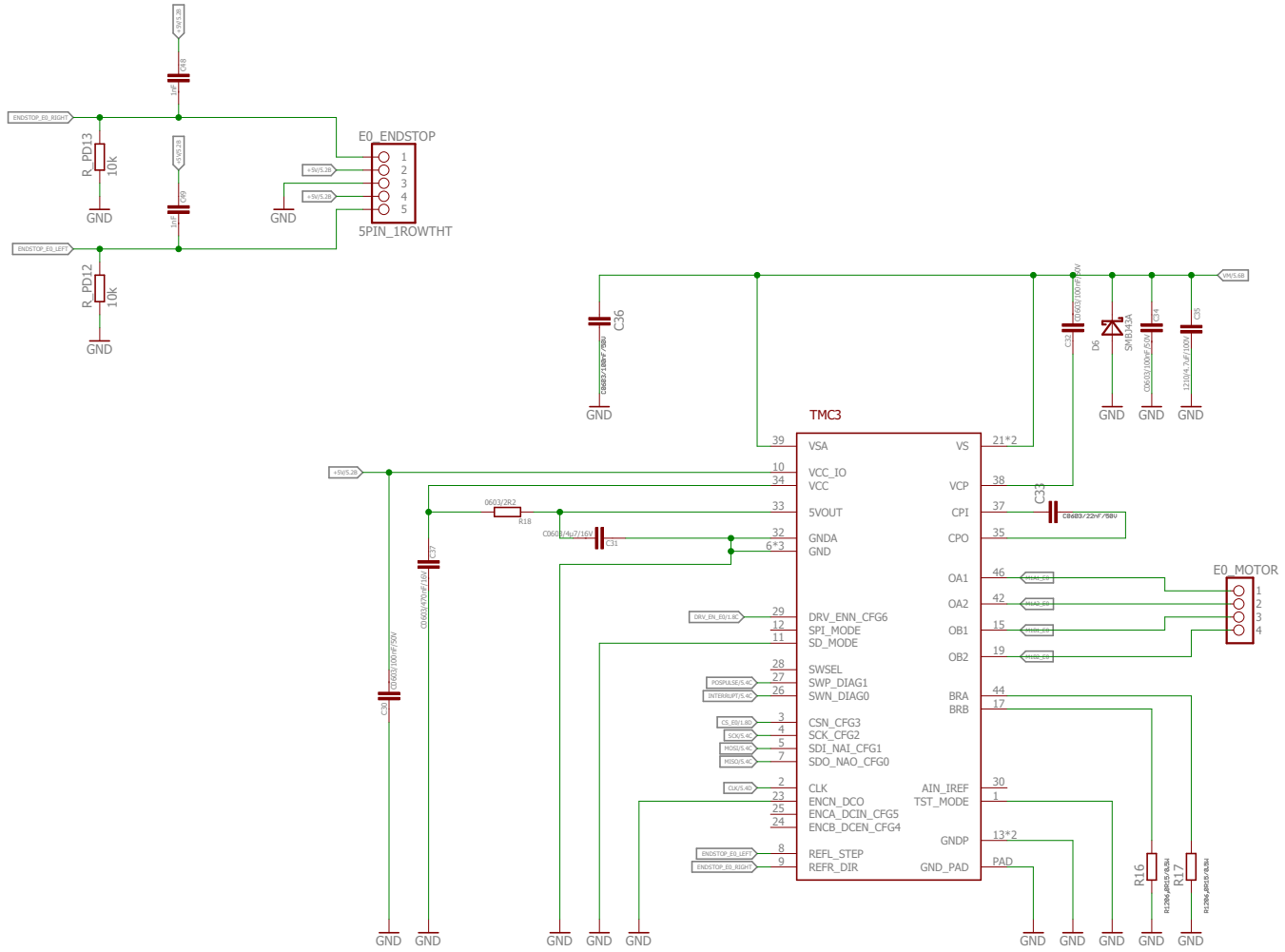

TRINAMIC
MOTION CONTROL

TMC5130_3D_Printer_BOARD_V_2

18.06.2015 15:38

Sheet: 6/6