USC University of Southern California

University of Southern California

Viterbi School of Engineering
Aerospace and Mechanical Engineering Department

AME 563 Project : Design and Manufacturing of Fuselage Assembly

Instructor: Bo Jin

Group 4:

Aniket Chorghe
Aakash Kadakia
Suyash Bare

Table of Contents

1. **Abstract**
2. **Introduction**
   2.1 Background on Aircraft Fuselage Structures
   2.2 Monocoque vs. Semi-Monocoque Construction
3. **Project Overview**
   3.1 Aim and Objectives
   3.2 Project Deliverables
   3.3 Problem Statement and Constraints
4. **Design Requirements and Constraints**
   4.1 Geometric Requirements
   4.2 Load-Carrying Requirements (Pass/Fail Criteria)
   4.3 3D Printing and Material Requirements (PLA, Process Parameters)
5. **Stiffener Selection and Preliminary Design**
   5.1 Role of Stiffeners in Fuselage Panels
   5.2 Candidate Stiffener Geometries (T, Hat, Z Sections)
   5.3 CAD Modeling of Individual Stiffeners
   5.4 Analytical Buckling Analysis (Euler's Critical Load)
   5.5 Finite Element Buckling Analysis
6. **Fuselage Section Design and Modeling**
   6.1 Overall Fuselage Geometry and Segmentation
   6.2 CAD Modeling of Base, Middle, and Top Sections
   6.3 Integration of Selected Stiffeners into the Fuselage
   6.4 Mass and Inertia Estimation
7. **Finite Element Analysis of the Fuselage Assembly**
   7.1 FEA Model Setup (Static Structural & Buckling)
   7.2 Mesh Convergence Study (With and Without Stiffeners)
   7.3 Stress, Deformation, and Buckling Results
   7.4 Effect of Stiffeners on Structural Performance
8. **Manufacturing and Assembly (3D Printing)**
   8.1 Printer, Material, and Process Parameters
   8.2 Print Orientation and Support Strategy
   8.3 Issues Encountered and Corrective Actions
   8.4 Final Fuselage Assembly and Visual Inspection
9. **Results and Discussion**
   9.1 Summary of Analytical vs FEA Results
10. **Conclusions**
11. **Future Work**

References

1. Abstract

This project focuses on the design, analysis, and manufacturing of a stiffened aircraft fuselage section using additive manufacturing techniques. A semi-monocoque fuselage concept was adopted, where structural stiffeners were used to enhance load-carrying capability while minimizing weight. Different stiffener geometries were considered for designing and evaluated using both analytical and finite element methods. The most efficient stiffener was selected based on critical buckling load and structural performance. The finalized stiffener was then integrated into a segmented fuselage model consisting of bottom, middle, and top sections depending on provided printing requirements. Static and buckling analyses were performed on both stiffened and unstiffened fuselage configurations to quantify the structural benefits of stiffeners. The complete fuselage assembly was fabricated using a 3D printer using FDM printer with PLA material.

2. Introduction

2.1 Background on Aircraft Fuselage Structures

The fuselage is one of the primary structural components of an aircraft, responsible for carrying payload, passengers, and critical onboard systems while maintaining aerodynamic shape and structural integrity. It must withstand complex combinations of axial, bending, shear, and pressurization loads during flight operations. Historically, fuselage structures have evolved from simple truss frameworks to advanced shell-based constructions that efficiently distribute loads while minimizing structural weight. The demand for lightweight, high-strength structures has continually driven innovation in fuselage design and manufacturing techniques.[1]

2.2 Monocoque and Semi-Monocoque Construction

Aircraft fuselages are generally classified into monocoque and semi-monocoque structures. In a monocoque structure, the external skin alone carries many of the applied loads. While this approach offers weight advantages, it is highly sensitive to local damage and instability. In contrast, the semi-monocoque configuration incorporates internal structural elements such as longerons, frames, and stiffeners that work together with the skin to resist applied loads. This configuration provides improved damage tolerance, buckling resistance, and overall structural reliability. Due to these advantages, semi-monocoque design is widely adopted in modern aircraft fuselage construction.[2]

3. Project Overview

3.1 Aim and Objectives

The primary aim of this project is to design, analyze, and additively manufacture a structurally efficient stiffened fuselage assembly capable of sustaining compressive loading without failure. The project follows a complete digital-to-physical workflow that includes computer-aided design (CAD), finite element analysis (FEA), and fused deposition modeling (FDM) based additive manufacturing.

3.2 Project Deliverables

The project deliverables include both digital and physical outputs across multiple stages of the additive manufacturing process and tested model.
The final project deliverables are:

- A fully developed CAD model of the fuselage assembly created using industry-standard software such as Fusion 360, SolidWorks, NX, or Inventor.
- STL files are exported from the CAD environment for all fuselage segments and stiffeners.

- Sliced build files and generated G-code prepared using slicer software such as Cura.
- A 3D printed fuselage assembly manufactured using FDM technology.
- Finite element simulation results in buckling and static structural response.
- A complete technical project report documenting all stages of design, analysis, and manufacturing.

3.3 Problem Statement and Constraints

Problem Statement

Thin-walled fuselage structures are highly susceptible to buckling under axial compressive loads. The core engineering challenge addressed in this project is to design a lightweight, additively manufactured stiffened fuselage structure that maximizes load-carrying capacity while remaining compliant with manufacturing and geometric constraints imposed by FDM 3D printing.

4. Design Requirements and Constraints

The design of the stiffened fuselage assembly was governed by a combination of geometric constraints, structural performance requirements, and additive manufacturing limitations. These criteria were established based on the AME563 project guidelines and the practical limitations of fused deposition modeling (FDM) 3D printing [3]

4.1 Geometric Requirements

The geometric design of the fuselage assembly was governed primarily by the build envelope limitations of the available fused deposition modeling (FDM) 3D printer and the structural sizing derived from loading requirements. According to the project constraints, all printed components were required to fit within a **6 in × 6 in × 6 in** build volume. Due to this limitation, the complete fuselage could not be fabricated as a single continuous component and therefore required segmentation.

Overall Fuselage Geometric requirements

- 2 Contour fuselage Skin Thickness: 0.040 in
- Maximum assembled height: 34 ± 0.25
- Structure must consist of stacked segments that assemble to full height.
- 30% sparse double-dense infill (locked parameter)

4.2 Load-Carrying Requirements

The primary structural requirement of the fuselage was its ability to withstand axial compressive loading without structural failure or excessive buckling deformation. The project adopted a pass/fail structural criterion based on whether the designed fuselage configuration could sustain the applied load without exceeding critical buckling limits.

The following structural conditions were used to evaluate performance:

- The fuselage must withstand the applied compressive load without experiencing catastrophic global buckling.
- Local buckling of skin panels must remain within allowable deformation limits.
- The stiffened fuselage must demonstrate improved load-carrying capability compared to the unstiffened configuration.

Finite element analysis (FEA) was used as the primary evaluation tool to verify structural integrity under both static structural loading and eigenvalue buckling analysis.

4.3 3D Printing and Material Requirements (PLA, Process Parameters)

Additive manufacturing constraints played a dominant role in shaping the fuselage design. The entire structure was required to be fabricated using fused deposition modeling (FDM) following the standard digital manufacturing workflow:

CAD → STL → Slicer → G-code → Printing

Material Requirement

The fuselage was required to be manufactured using a thermoplastic material compatible with FDM printing. While materials such as ABS and ASA are commonly used in structural printing, PLA was selected for this project due to availability constraints.

CAD and File Preparation

- The fuselage and stiffeners were designed using industry-standard CAD software such as Siemens NX.
- The CAD models were exported into STL format prior to slicing.

5. Stiffener Selection and Preliminary Design

5.1 Role of Stiffeners in Fuselage Panels

Thin-walled fuselage structures are highly susceptible to elastic instability when subjected to axial compressive loading. Due to the relatively small thickness of the fuselage skin, local and global buckling can occur at load levels significantly lower than the material yield strength. To mitigate this behavior, longitudinal stiffeners are integrated into the fuselage panels to improve bending stiffness, increase buckling resistance, and enhance overall load-carrying capability.

The addition of stiffeners increases the effective second moment of area of the fuselage cross-section and subdivides the skin into smaller panel bays, thereby delaying the onset of both skin buckling and overall structural collapse. Furthermore, stiffeners assist in redistributing loads more uniformly and improving damage tolerance in semi-monocoque fuselage construction.

5.2 Candidate Stiffener Geometries (T, Hat, and Z Sections)

Three different stiffener geometries were considered for this study. These geometries were selected because they represent commonly used aerospace stiffener profiles with significantly different structural behaviors.

- The **T-section stiffener** provides high bending stiffness in one principal direction and offers simplicity in both design and manufacturing.
- The **Hat-section stiffener** provides superior torsional rigidity and improved buckling resistance due to its semi closed cross-sectional geometry.
- The **Z-section stiffener** offers efficient load transfer and compact geometric packaging where asymmetric load paths exist.

All three stiffener candidates were designed using the same material, identical length, and comparable cross-sectional area, ensuring that performance differences observed in later analysis were governed primarily by geometry rather than material or size inconsistencies. Figure1 & 2 shows each of these model

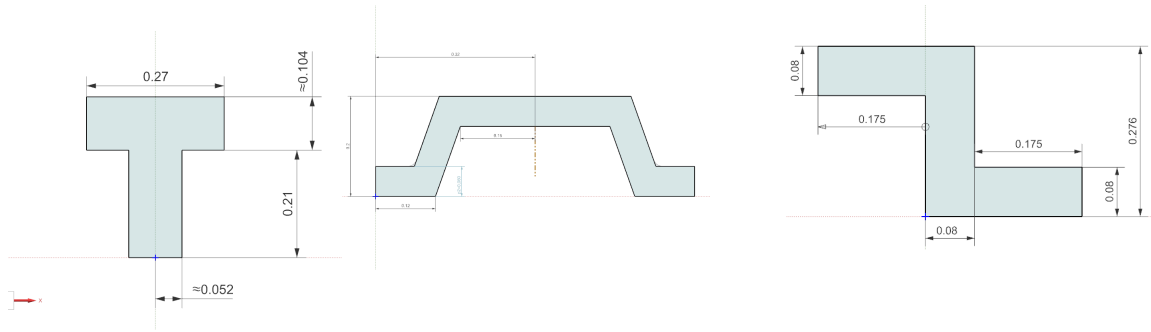

Figure 1: Cross Section of T, Hat, and Z-Section Stiffeners

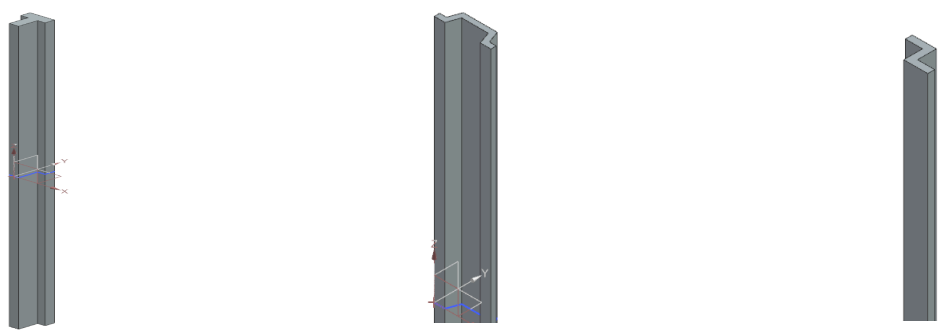

Figure 2: CAD of T, Hat, and Z-Section Stiffeners

5.3 Stiffener Dimensional Definition Based on Design Sketch

The cross-sectional geometry and dimensions of each stiffener were defined directly from the design sketches provided in the project documentation. These sketches established the following key dimensional parameters for each stiffener profile:

- Flange width
- Web height
- Wall thickness
- Base width
- Fillet transitions at joints

These dimensions were selected to satisfy:

- Structural stability under compressive loading
- Compatibility with FDM 3D printing
- Proper bonding interface with the fuselage skin
- Avoidance of excessive overhangs during printing

The hat-section stiffener, which was later selected as the final design, consisted of:

- A central web of defined height
- Two inclined side walls
- A top flange providing additional bending stiffness

All stiffener dimensions were maintained constant along their length to ensure uniform load transfer and predictable buckling behavior.

5.4 CAD Modeling of Individual Stiffeners

The modeling process involved:

1. Creation of precise 2D cross-sectional sketches using the dimensioned stiffener profiles
2. Extrusion of each profile along a constant longitudinal length
3. Application of uniform wall thickness across all features
4. Verification of geometric compatibility with the fuselage skin

Special attention was given to:

- Maintaining minimum printable feature sizes
- Avoiding unsupported overhang angles
- Preserving uniform stress distribution paths

The finalized CAD models were exported in STL format for subsequent finite element analysis and additive manufacturing.

5.5 Analytical Buckling Analysis

A preliminary analytical buckling analysis was performed to estimate the critical compressive buckling load of each stiffener configuration prior to numerical simulation. The analysis was based on Euler's elastic buckling theory, which provides **Euler's Critical Load** for slender structural members that could be used to compare with the FEA results in order to validate the FEA method.

The Euler buckling expression is given by:

$$P_{cr} = \frac{\pi^2 EI}{(KL)^2}$$

Equation 1: Euler's Critical Load Formula

where:

- P_{cr} = critical buckling load
- E = Young's modulus of the material
- I = minimum second moment of area of the stiffener cross-section
- L = effective stiffener length
- K = column effective length factor

The minimum moment of inertia for each stiffener was computed using its cross-sectional geometry obtained from the CAD models. The analytical results were used as an initial screening tool to identify the most structurally efficient stiffener prior to detailed finite element evaluation.

5.6 Finite Element Buckling Analysis

To compare the analytical method to FEA, a linear buckling analysis was conducted in NX. the results are based on eigenbuckling analysis methods where the following governing equation determines the critical buckling load

$$Pcr = \lambda_i F_{Applied}$$

Equation 2: Eigenvalue buckling equation

where:

- P_{cr} = critical buckling load
- λ_i = Mode shape i

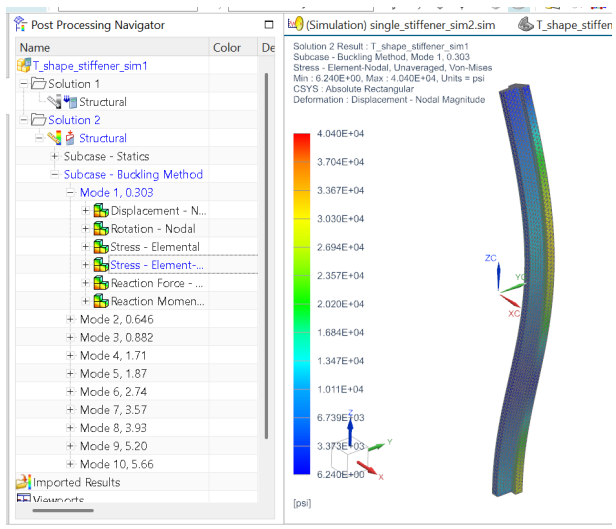

Figure 3: Eigenbuckling FEA Example: T-Cross section

Additionally, a static structural analysis was performed on each shape with a focus on measuring the lowest stress to weight ratio with a fixed beam and a compressive load downward. A result are seen below

Linear Buckling Analysis							
Stiffener	Element size (inch)	Mass of Body (lb)	Element #	Node #	Buckling Mode 1 (from FEA)	Critical Load (psi)	Critical Load Hand Calc (psi)
Hat	0.05	0.0143	20111	39174	0.32	64	65.16
Z section	0.05	0.0142	15341	27984	0.202	40.4	40.69
T section	0.05	0.0142	12856	23285	0.303	60.6	61.24

Static Structural Analysis								
Stiffener	Element size (inch)	Mass of Body (lb)	Element #	Node #	Max Displacement (in)	Avg_ Stress (psi)	Un-Avg_ Stress (psi)	S/W Ratio
Hat	0.05	0.0143	20111	39174	4.46E-02	5483	6564	383426

Z section	0.05	0.0142	15341	27984	4.47E-02	5703	6299	401619
T section	0.05	0.0142	12856	23285	4.47E-02	5816	6675.65	409577

From Table 1, the hat stiffener provides the highest critical buckling load (~65 psi), with hand calculations and FEA agreeing within ~2%. Table 2 shows the static structural results, where the stress-to-weight (S/W) ratio computed as average stress divided by mass confirms the hat stiffener's superior performance. A lower S/W ratio indicates lower stress under the same 200-lb load, and therefore a stronger, more efficient stiffener. After the analysis hat stiffener showed the best performance based on stress-to-weight ratio.

6. Fuselage Section Design and Modelings

6.1 Overall Fuselage Geometry and Segmentation

After selecting the stiffener, the fuselage was modeled. The fuselage is divided into three main sections: 1 Top section, 4 middle sections and 1 bottom/base section. The fuselage also had arrangements to accommodate all sections. The total length of the assembled fuselage is 33.84" with maximum diameter of 2". The sub sections are designed in such a way that they can be joined together without using any nuts and bolts and when combined together, the total length becomes 33.84". Hat stiffeners were added in the fuselage model. 4, 6 and 8 stiffeners were added in the fuselage to determine the optimum number.

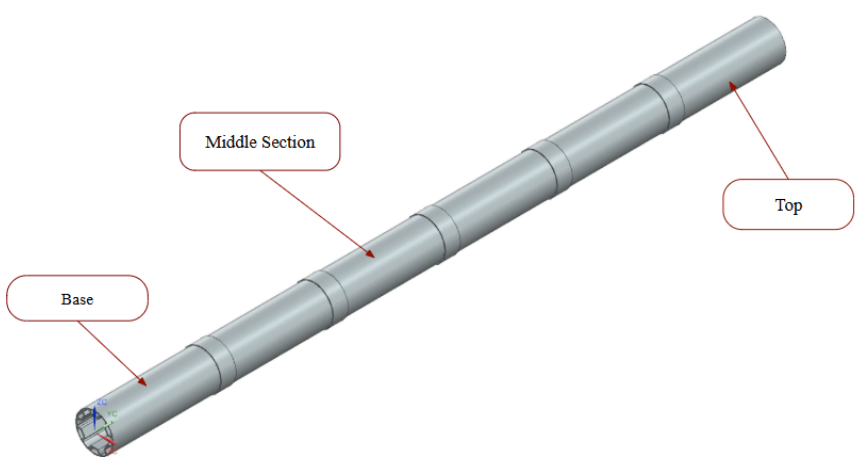

Figure 4: Full CAD Assembly

6.2 CAD Modeling of Base, Middle, and Top Sections

Since the fuselage is made up of three sections all of them have different dimensions. The dimensions are as follows:

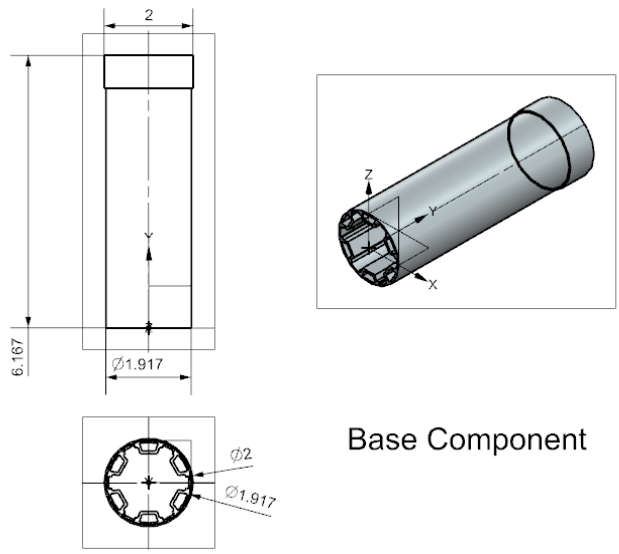

Base Component

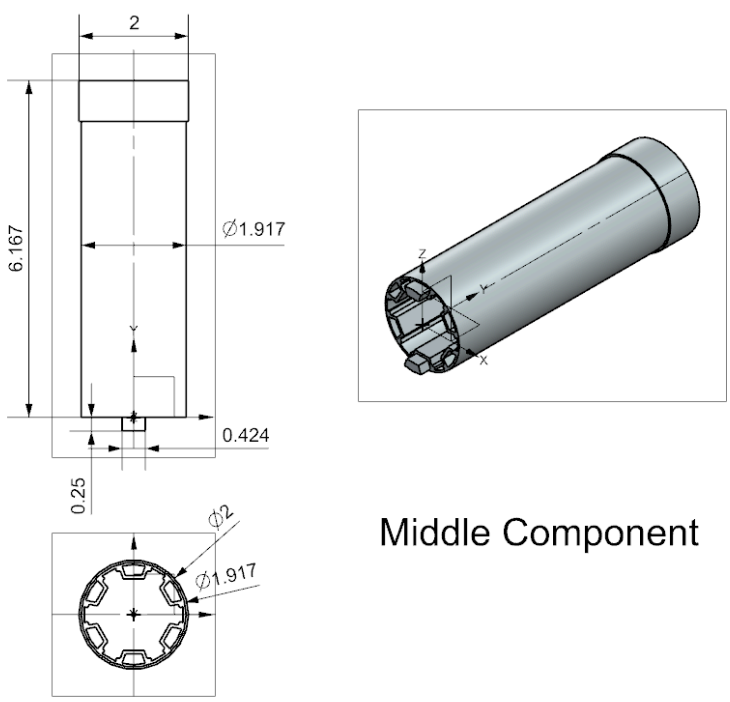

Middle Component

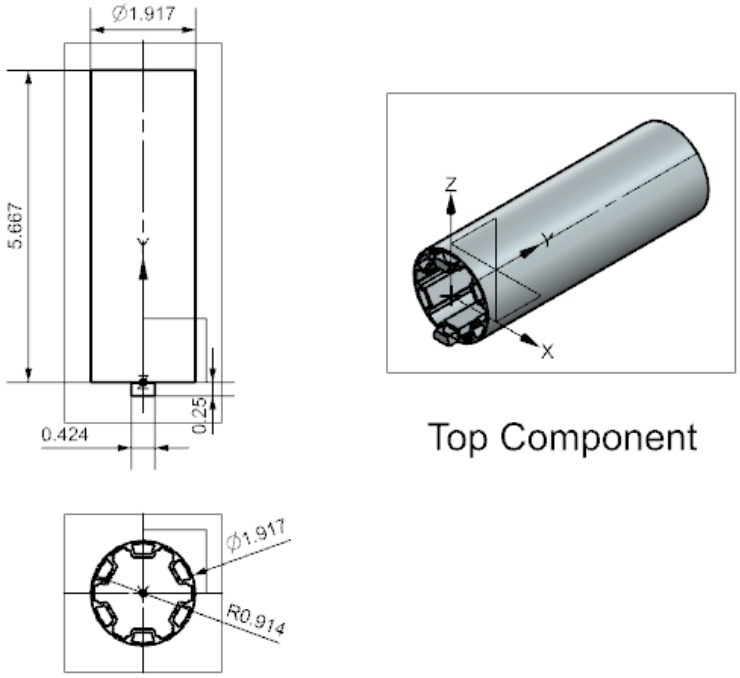

Figure 5: Drawing Of all sections views

6.3 Integration of Selected Stiffeners into the Fuselage

The selected hat stiffeners were modelled with the fuselage. Fuselage with 4, 6 and 8 stiffeners were modelled and FEA analysis was conducted on them.The optimum number of stiffeners will be explained further in the report in the FEA section. The selection was based on the weight, deformation and stress carrying capacity of the fuselage. The cross section of the fuselage with various stiffeners is shown in the image below.

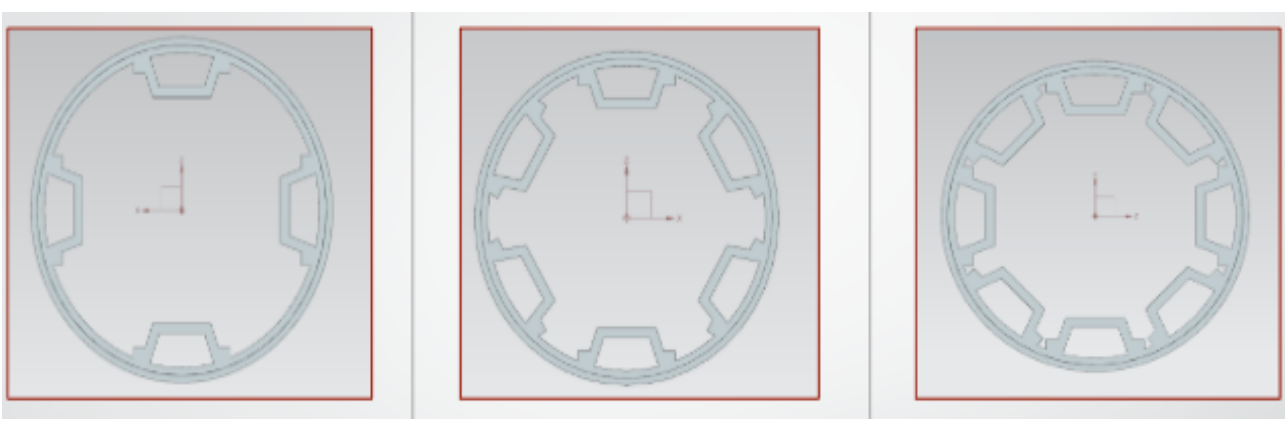

Figure 6: Top View of 4,6,8 Stiffeners

6.4 Mass and Inertia Estimation

For the mass properties, PLA material is selected with a density of 0.0508 lb/in3. The mass properties are shown below in the pictures.

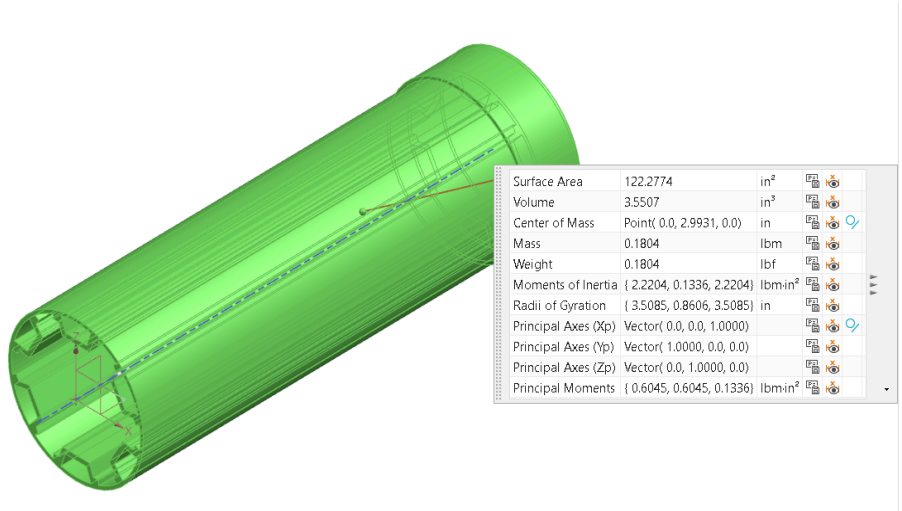

Figure 7: Base Component

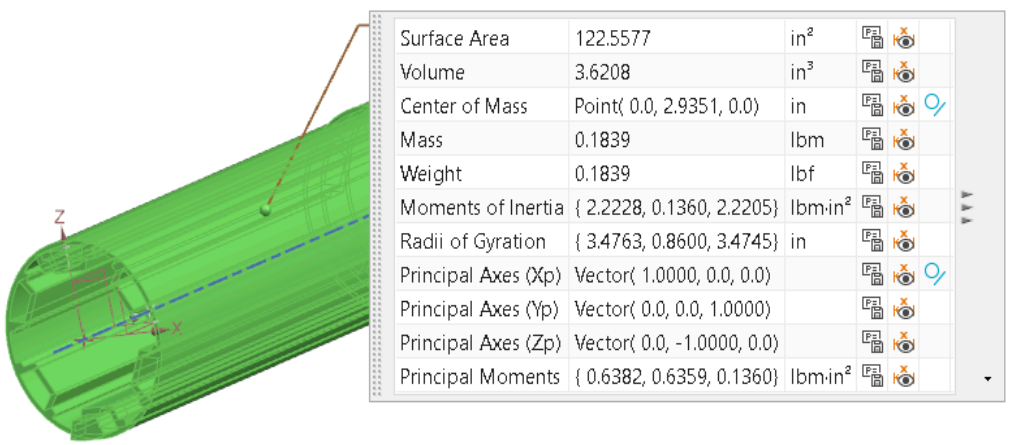

Figure 8: Middle Component

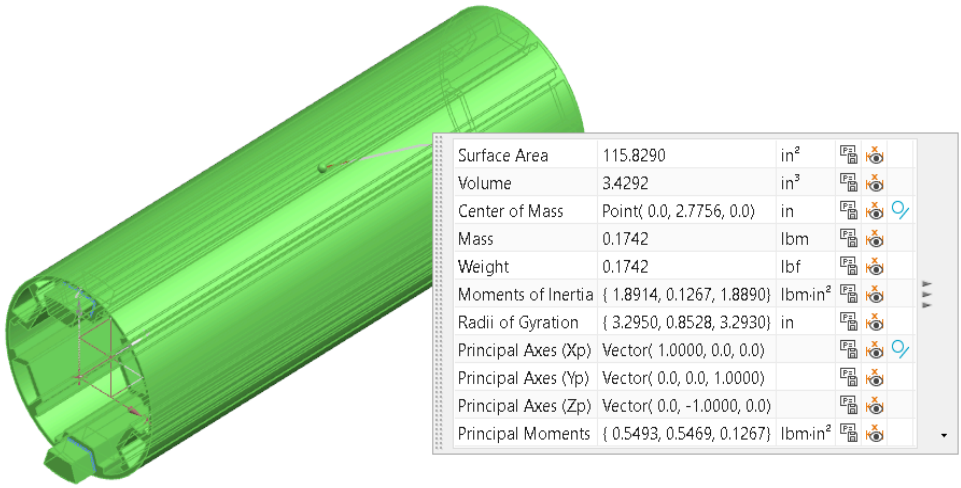

Figure 9: Top Component

The total mass of the fuselage assembly with six stiffeners is 1.0902 lbs. (base = 0.1804 lbs + middle = 0.1839x4 = 0.736 lbs + top = 0.1742lbs)

7. Fuselage Section Design and Modelings

The structural response of the fuselage assembly under axial compression was evaluated using finite element analysis (FEA). Both linear static structural analysis and linear eigenvalue buckling analysis were performed to quantify stiffness, stress distribution, and global buckling behavior for the stiffened and unstiffened configurations.

7.1 FEA Model Setup for Selection of Number of Stiffeners

The final three-dimensional CAD model of the fuselage assembly, including both stiffened and unstiffened configurations, was imported directly from the CAD environment into the finite element solver. The imported model corresponded to the segmented fuselage geometry described earlier, consisting of multiple cylindrical sections assembled to form the full fuselage length. Separate simulation models were prepared for:

- The unstiffened fuselage, serving as the baseline case
- The stiffened fuselage, incorporating the selected stiffener design

All fuselage and stiffener components were assigned PLA material properties, consistent with the FDM printed prototype. The material was modeled as homogeneous, isotropic, and linear elastic for both static and buckling analyses. The required mechanical properties (Young's modulus, Poisson's ratio, and density) were defined within the engineering materials module of the solver:

- Density: 0.045 lb/in^3
- Young's Modulus : 4.34 e05 psi
- Poisson'sRatio: 0.35

Nonlinear material behavior, plastic deformation, and printing-induced anisotropy were neglected to focus specifically on elastic stiffness and buckling instability.

Boundary Conditions

To replicate axial compression loading, the following boundary conditions were applied:

- One end of the fuselage was assigned a fixed support, restricting all translational and rotational degrees of freedom.
- The opposite end of the fuselage was left free to translate only along the axial direction to allow compressive deformation.

These constraints simulate a realistic compression testing condition where one end is fully restrained and the other end is loaded.

Load Application

A uniform axial compressive load was applied to the free end face of the fuselage section in the longitudinal direction. The same load magnitude was applied to both the stiffened and unstiffened fuselage section models to ensure a direct and fair comparison of structural performance. For the static structural analysis, this load produced deformation and stress results. For the buckling analysis, the static preload condition was used as the base state from which elastic buckling eigenvalues and mode shapes were extracted.

FEA-Based Selection of Number of Stiffeners

To determine the optimal number and configuration of stiffeners, a parametric FEA study was performed on three reinforcement layouts: a fuselage section with four longitudinal stiffeners, eight longitudinal stiffeners, and six hat-section stiffeners. All three configurations were analyzed under identical loading and boundary conditions to ensure a direct and unbiased comparison. The evaluation metrics included maximum axial displacement, average von Mises stress, unaveraged (peak) von Mises stress, and stress-to-weight ratio.

Table: FEA results for different number of stiffeners

Number of Stiffeners	Element size (inch)	Mass of Body (lb)	Element #	Node #	Max Displacement (in)	Avg_Stress (psi)	Un-Avg_Stress (psi)	Delta Stress	Stress/Weight
4	0.05	0.1319	158194	305437	2.71E-03	298.69	362.04	63.35	2264.518575
6	0.13	0.1598	33292	64658	2.21E-03	200.11	253.77	53.66	1252.252816
8	0.13	0.1877	37569	72325	1.85E-03	172.51	219.96	47.45	1171.870005

Based on the quantitative FEA comparison provided in the table above, the four-stiffener configuration was deemed structurally inefficient due to excessive stress levels, while the eight-stiffener configuration, although structurally superior, imposed an undesirable mass penalty. The six hat-section stiffener configurations provided the most optimal balance between low stress, reduced displacement, and moderate weight, and was therefore selected as the final stiffener layout for the full fuselage assembly and for physical fabrication.

7.2 Mesh Convergence Study

A mesh convergence study was conducted on a single fuselage section to ensure that the finite element results were independent of the discretization size and to determine an optimal mesh density for accurate stress prediction. The study was performed for both the unstiffened fuselage section and the stiffened fuselage section under identical axial compressive loading and boundary conditions.

Five successive mesh refinement levels were analyzed for each configuration. For each mesh level, both the average von Mises stress and the unaveraged (peak) von Mises stress were extracted and compared.

7.2.1 Mesh Convergence of Fuselage Section (With and W/out stiffener)

For the stiffened fuselage section, the stress plots demonstrate a highly stable stress response across progressive mesh refinement levels. The average stress remains nearly constant at approximately 200 psi across all five mesh versions, while the unaveraged (peak) stress remains within a narrow band of approximately 250–270 psi.

This behavior indicates that:

- The solution is numerically stable even at relatively coarse mesh levels.
- The presence of the stiffener leads to a well-distributed stress field, reducing local stress gradients.
- The difference between average and peak stress is minimal, confirming low stress concentration effects.

Mesh Version 3 and beyond show negligible change in both average and peak stress, indicating that mesh convergence is achieved for the stiffened configuration at this refinement level. Therefore, the corresponding mesh density was selected for all subsequent stiffened fuselage simulations.

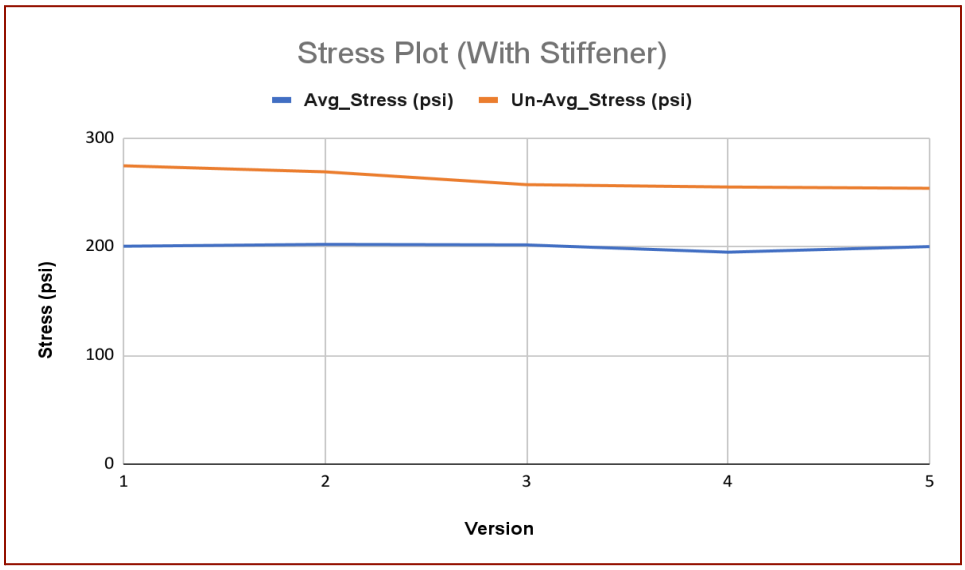

Figure 10: Mesh Convergence for fuselage section with stiffener

7.2.2 Mesh Convergence of Unstiffened Fuselage Section

In contrast, the unstiffened fuselage section exhibits significantly greater sensitivity to mesh refinement. The average stress values vary from approximately 400 psi to over 520 psi, while the unaveraged peak stress increases from approximately 500 psi to beyond 650 psi as the mesh is refined.

This trend reveals that:

- The unstiffened fuselage section experiences strong stress concentrations, particularly along the thin fuselage wall under axial compression.
- Coarse meshes underpredict peak stresses, while finer meshes capture the true localized stress behavior.
- The gap between average and unaveraged stress remains large across all versions, indicating severe localized overstressing.

Stress values begin to stabilize after Mesh Version 4, where changes in both average and peak stress become relatively small. This refinement level was therefore identified as the converged mesh for the unstiffened fuselage section.

7.2.3 Selection of Final Converged Mesh

Based on the trends observed:

- The stiffened configuration converged earlier due to more uniform load distribution and reduced stress gradients.
- The unstiffened configuration required finer mesh refinement to accurately capture stress concentrations and prevent numerical underprediction.

To maintain consistency and ensure conservative stress estimation, the final mesh density selected for all subsequent fuselage simulations corresponded to the converged unstiffened mesh level. This ensured that both stiffened and unstiffened results were obtained using a sufficiently refined discretization.

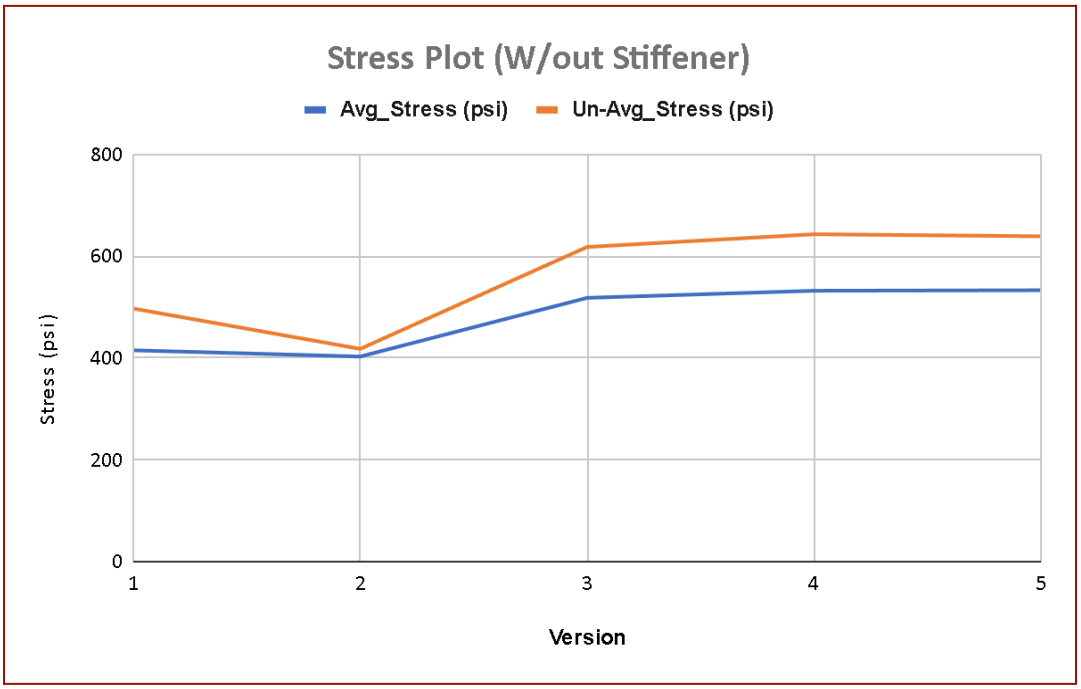

Figure 11: Mesh Convergence for fuselage section with stiffener

7.2.4 Structural Implications of the Convergence Results

The mesh convergence study also highlights the fundamental structural advantage of stiffener integration:

- The stiffened fuselage section exhibits more than 50% reduction in average and peak stress compared to the unstiffened section.
- The stiffened configuration demonstrates mesh-insensitive behavior, which is characteristic of structurally stable, load-efficient designs.
- The unstiffened fuselage section displays high stress sensitivity and numerical instability, indicating its vulnerability to localized buckling and failure.

These findings confirm that both the selected mesh density is numerically valid, and the stiffener provides substantial structural performance improvement at the sectional level.

7.3 FEA of Fuselage Assembly

The full fuselage with six stiffeners and six assembled sections are shown below. The fuselage is modeled as a compressive buckling test, the bottom surfaced fixed and the top constrained as a pinned condition to allow rotation and -Z compression. A uniform compressive load of 200 lbs is applied to evaluate buckling

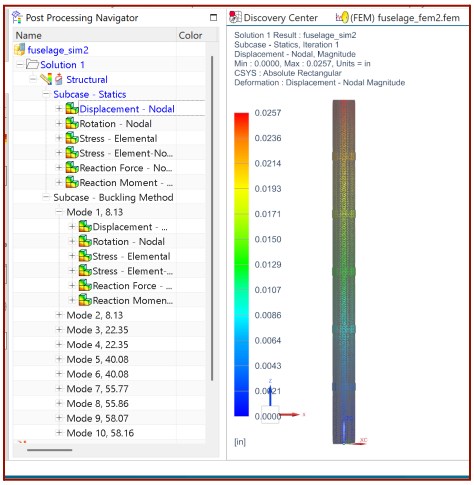

Figure 12: Fuselage Displacement

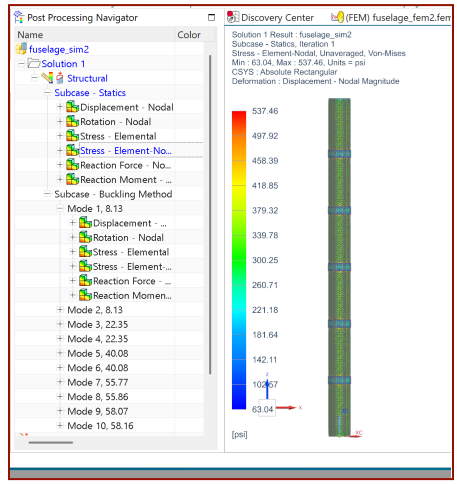

Figure 13: Fuselage Stress

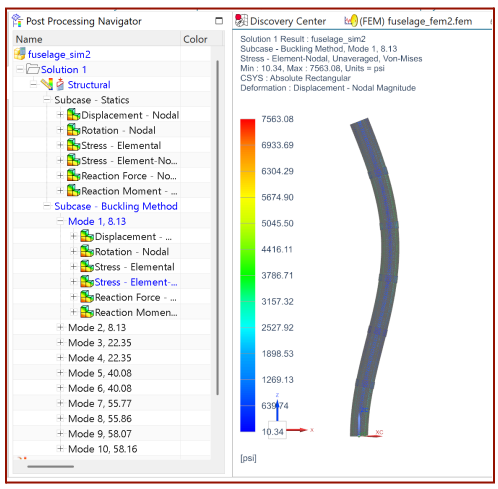

Figure 14: Fuselage Critical Load

The final results of a 200lbs test show a maximum deformation of 0.0257”, maximum stress of 537 PSI and a critical load of 1626lbs. This is assuming perfectly fixed bottom conditions and a glued mesh mating condition between each section

8. Manufacturing and Assembly (3D Printing)

8.1 Printer, Material, and Process Parameters

The printer used for this was a MK4S Prusa 3D printer. This was chosen due to availability and constraints of printing during the project duration. The following parameters were taken to print. The final print consisted of a 0.008” layer height with a 0.0235” nozzle. This allowed for a 0.047” 2 contour layer thickness of the fuselage, following closely to the 0.04” target requirement.

8.2 Print Orientation and Support Strategy

A 6”x 6”x 6” bounding box would require the print of the structure to be divided into 6 sections with an average height of 5.667”. The configuration of through the slicer software is pictured below:

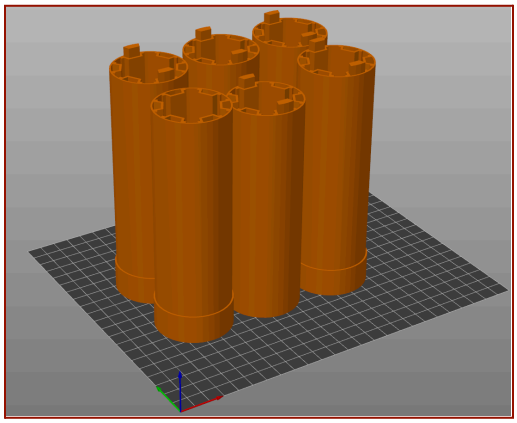

Figure 13: 6 Section Configuration

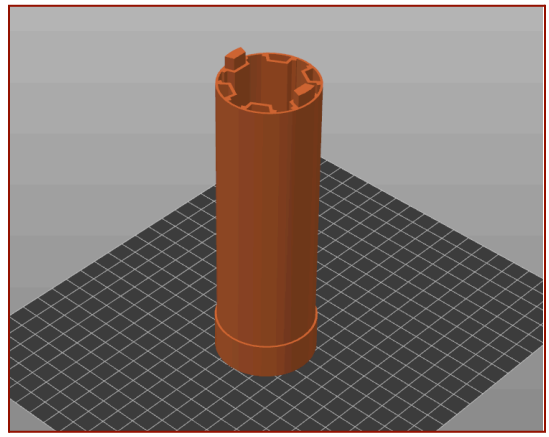

Figure 14: 1 Section Configuration

A key part of this design is the snap fit connection tabs that connect each section. To print these, each tab has a supporting draft made in CAD to support any concerns while overhanging. The cross section view of the draft denoted in Figure 15 shows this manufacturing strategy.

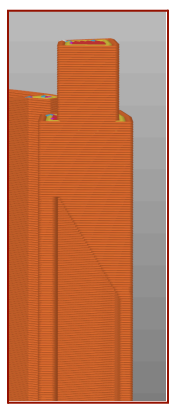

Figure 15: Draft to Support Print Overhang

The final fuselage sections were printed individually rather than all at once to accommodate printer availability and reduce the risk of long-duration print failures. Printing each segment separately provided greater reliability, ensured consistent print quality, and prevented a single error from compromising the entire multi-hour build.

8.4 Final Fuselage Assembly and Visual Inspection

After printing, the 6 sections were stacked together into the following snap fit assembly for testing validation.

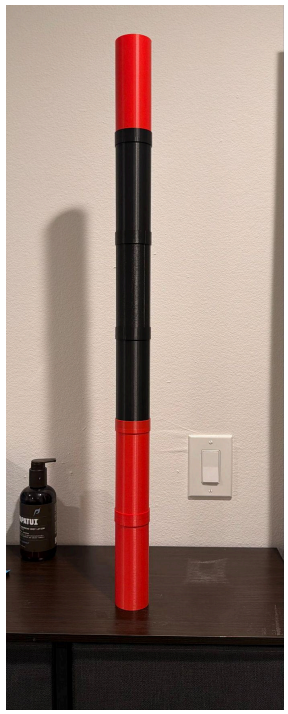

Figure 16: Full Final Assembly

9. Results and Analysis (FEA)

Result Type	Value	Notes
Maximum deformation	0.0257 in	Under 200-lb axial load
Maximum von Mises stress	537 psi	Peak at stiffener/skin junction
Critical buckling load	1626 lbs	First global buckling mode
Boundary conditions	Fixed bottom, pinned top	Matches compression test setup
Load applied	200 lbs	Uniform axial compression

These results show that the stiffened fuselage remains well within elastic limits under the 200 lbs load and has a large safety margin before global buckling following the provided load requirements of sustaining deformation of 100 lbf.

10. Conclusion

The design, analysis and manufacturing of a scaled down fuselage was done successfully. CAD modeling and FEA analysis of the fuselage model was done using Siemens NX software and the model later was 3D printed and assembled. From the modelling and analysis it can be concluded that the hat stiffener has the best cross section among hat, T and Z section which resists buckling. This was proven with the hat stiffener having the highest critical load and the lowest stress to weight ratio with the same loading conditions across all 3 stiffeners. It was also observed that six numbers of stiffeners were optimum among 4, 6, and 8 since it has the perfect balance between load carrying capacity and the weight. The full fuselage analysis additionally demonstrated strong global buckling resistance and reduced deformation, validating the effectiveness of the selected stiffener configuration and confirming the structural efficiency of the final assembled fuselage.

11. Future Direction

After the successful completion of the design and analysis of the fuselage, the work can be continued in the future for the improvement in the design of stiffeners. Since the hat stiffeners proved to be the best cross section for this case, iterations in the dimensions can be made to see the variation in the load carrying capacity of the overall fuselage. The cross section of the stiffeners can be varied to check the stress-weight ratio or the cross sectional area can be kept constant and changes in the dimensions can be made to determine the critical dimension of the cross section. After the results from testing are complete, these analytical results can be compared directly with the test report to see stress and displacement accuracies between the model and the physical component.

Changes in the material or the manufacturing process can be made to increase the load carry capacity. Additionally, future design should aim to print all fuselage sections in a single build to align with SAMPE competition requirements and ensure consistent print quality across the entire structure.

References:

1. Wikimedia Foundation, 2024, *"Fuselage,"* Wikipedia https://en.wikipedia.org/wiki/Fuselage
2. Grupo One Air, 2025, *"What Is a Fuselage Airframe?"* GrupoOneAir.com https://www.grupooneair.com/what-is-fuselage-airframe/
3. Jin, B., 2024, *"AME 563 Project: Design and Additive Manufacturing of a Fuselage Assembly,"*
4. Dassault Systèmes, 2024, *"SIMANEAL-C: Eigenbuckling Analysis,"* Abaqus Reference Manual, https://docs.software.vt.edu/abaqusv2024/English/?show=SIMACAEANLRefMap/simaanl-c-eigenbuckling.html