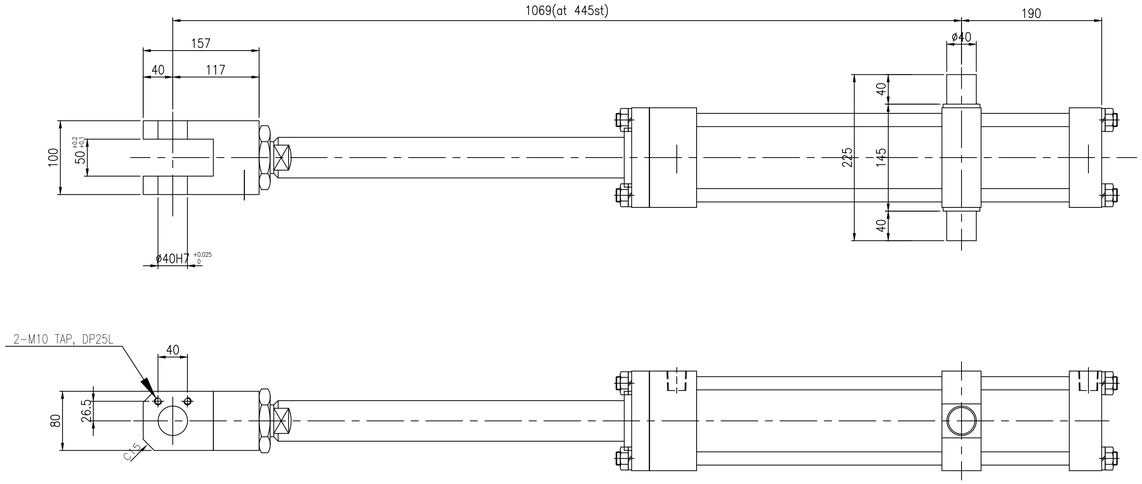

1 (▽)

HYDRAULIC CYLINDER (YUKEN)
ø100 x ø56 x 445st

SPECIFICATION		
CYL'D BORE	ø 100	MM
ROD DIAMETER	ø 56	MM
STROKE	445	MM
WORKING PRESSURE	MAX 100 kgf/cm²	
TEST PRESSURE	MAX 140 kgf/cm²	
WORKING FLUID	MINERAL OIL	
PAINTING COLOR	MUNSEL	
APPROX' WEIGHT		Kg

7 (▽, ▽▽)

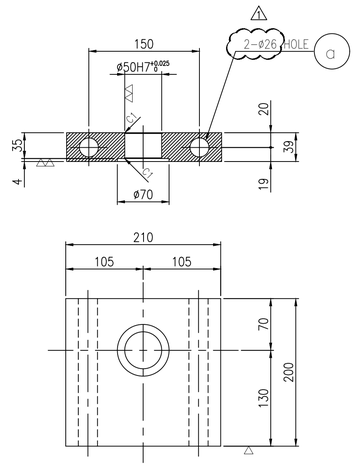

2 (▽, ▽▽)

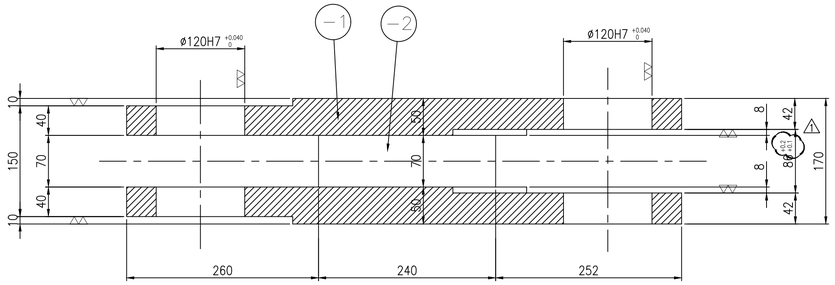

3 (▽▽)

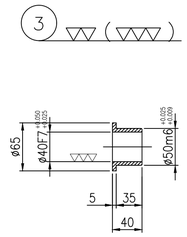

4 (▽▽)

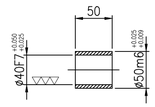

NOTE:

1. ALL JOINT TO BE WELDED UNLESS OTHERWISE NOTED. (⌒, ⌒, ⌒, ⌒a a=t/2+1-2mm)
2. MACHINE AFTER ANNEALING
3. GENERAL CHAMFER C1.

T/W = 115.3 Kg

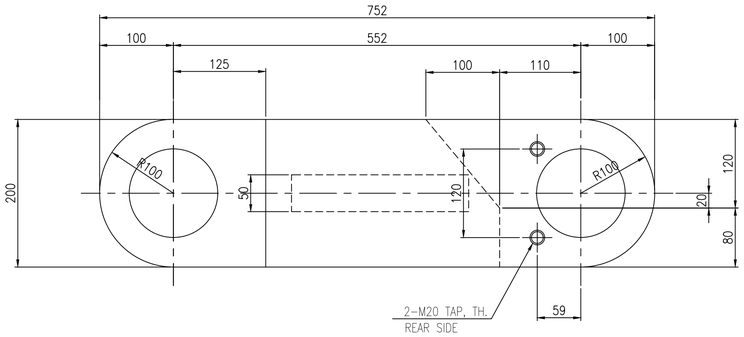

5 (▽▽) (▽)

NOTE:

1.Q&T(Hs35°±3)

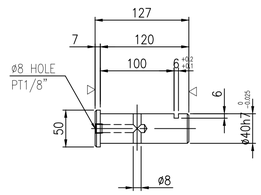

6 (▽)

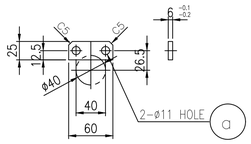

NO.	DESCRIPTION		MAT'(KS)	UNIT QUANTITY	TOTAL QUANTITY	PERUNIT WEIGHT(kg)	TOTAL WEIGHT(kg)	REMARK'S
a	HEX. BOLT, S/W	M24x250L	PUR-		4			
7	BRACKET	PL39x200x210	SS400		2	10.8	21.6	
a	HEX. BOLT, S/W	M10x25L	PUR-		2			
6	KEY PLATE	PL6x25x60	SS400		1		0.1	
5	PIN	RBø50x127L	#500SP		1		1.3	
4	OILESS BUSH	SPB4050	#500SP		1		0.3	
3	OILESS BUSH	SPF4040	#500SP		2	0.2	0.4	
-2	PLATE	PL50x70x240	SS400		1		6.6	
-1	PLATE	PL50x200x752	SS400		2	42.5	85.0	
2	LINK		SS400		1		91.6	
1	HYDRAULIC CYLINDER	ø100xø56x445st	PUR-		1		-	YUKEN

NO.	DATE	REVISIONS & DESCRIPTION	Drawn	Checked	Reviewed	Approved
4						
3						
2						
1	17.05.19	TOLERANCE ADDED	D.Y.K	S.M.B	C.S.K	D.S.H
0	15.01.19	FOR APPROVAL	D.Y.K	S.M.B	C.S.K	D.S.H

ALLOWABLE TOLERANCE LIMIT FOR MACHINED PART UNLESS OTHERWISE SPECIFIED

DIMENSION	0.5 ~ 6	6 ~ 30	30 ~ 120	120 ~ 315	315 ~ 1000	1000 ~ 2000
TOLERANCE	±0.1	±0.2	±0.3	±0.5	±0.8	±1.0

ALL WELDING SYMBOLS ARE OTHERWISE SPECIFIED. UNLESS

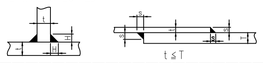

N	2.3	3.2	4.5	6	8	9	10	12	13	14	15	16	19	20	22	25	28	32	36	38	40	45
H	2.3	3.2	4	4	5	5	6	7	8	8	8	8	10	10	12	12	14	14	16	18	18	20	22

SURFACE FINISH SYMBOLS COMPARISON

Ra	50	25	12.5	6.3	3.2	1.6	0.8	0.2	0.1
SYMBOLS	~	▽	▽▽	▽▽	▽▽	▽▽▽	▽▽▽	▽▽▽▽	▽▽▽▽
Ra	50	25	12.5	6.3	3.2	1.6	0.8	0.2	0.1
RMAX (μm)	NON FINISH	100S	50S	25S	12.5S	6.3S	3.2S	0.8S	0.4S

posco 포스코건설

NAWOO Engineering & Consulting

JSW Steel Limited

TITLE		
JSW Vijaynagar PLANT	CCL FACILITY	ITEM No. 1.1.04 No.1 PAY OFF REEL Outboard Bearing – Hydraulic Cylinder Detail

	DRAWN	CHECKED	REVIEWED	APPROVED
JSW SIGNATURE				
JSW DATE				
POSCO E&C	D.Y.K	S.M.B	C.S.K	D.S.H
POSCO E&C DATE	15.01.19			

SCALE	1:4
PROJECTION	
SIZE	A1
DIMENSION	mm
EQUIPMENT NO.	1.1.04
POSCO E&C DWG. NO.	JSW-3-1104-M33-11107
REF. DWG.	
JSW DWG. NO.	

A1 (841x594)