UNIT 4

Transducer

Transducer:

Transducer is a device which converts the energy from one form to another form. This energy may be electrical, mechanical, chemical, optical or thermal. The transducer that gives electrical energy as output is known as electrical transducer.

The transducers are classified as (i) Active and (ii) Passive transducers.

Active transducers, also known as self generating type, develop their own voltage or current as the output signal. The energy required for production of this output signal is obtained from the physical phenomenon being measured.

Passive transducers, also known as externally powered transducers, derive the power required for energy conversion from an external power source.

A few examples of active and passive transducers are given in Table

Active transducers	*Passive transducers*
Thermocouple	Resistance
Piezoelectric transducer	Potentiometric device
Photovoltaic (Photojunction) cell	Resistance strain gauge
Moving coil generator	Resistance thermometer
Photoelectric (Photoemission) cell	Thermistor
	Photoconductive cell
	Inductance
	Linear Variable Differential Transformer (LVDT)
	Capacitance
	Voltage and current
	Devices using Hall effect
	Photoemissive cell
	Photomultiplier tube

Comparison between active and passive transducer

Active Transducer	Passive Transducer
The active transducer is also called as self generating type transducer.	The passive transducer is also called as externally powered transducer.
The active transducer does not require any auxiliary (external) power supply.	The passive transducer requires auxiliary (external) power supply for transduction.
The signal conversion is simpler.	The signal conversion is more complicated.
The energy required to produce output is obtained from the physical quantity.	They also derived part of the power required for conversion from physical quantity under measurement.

Requirements for Transducer

Linearity: Have linear input output characteristics

Repeatability: Produce the same result when the same input signal is applied repeatedly under same environmental conditions

Ruggedness: Capable of withstanding overload.

High Signal To Noise Ratio: Free from the internal and external noise

Highly Reliable: Possess minimum error in measurement

Good Dynamic Response: Must withstand sudden changes in input

No Hysteresis: Produce similar result while input signal is varied from its low value to high value and vice versa.

Residual Deformation: No deformation of testing material

Classification of Transducer

1. As active and passive transducer
2. According to transduction principle
3. As analog and digital transducer
4. As primary and secondary transducer
5. As forward transducer and inverse transducer

Types of Active and Passive Transducer

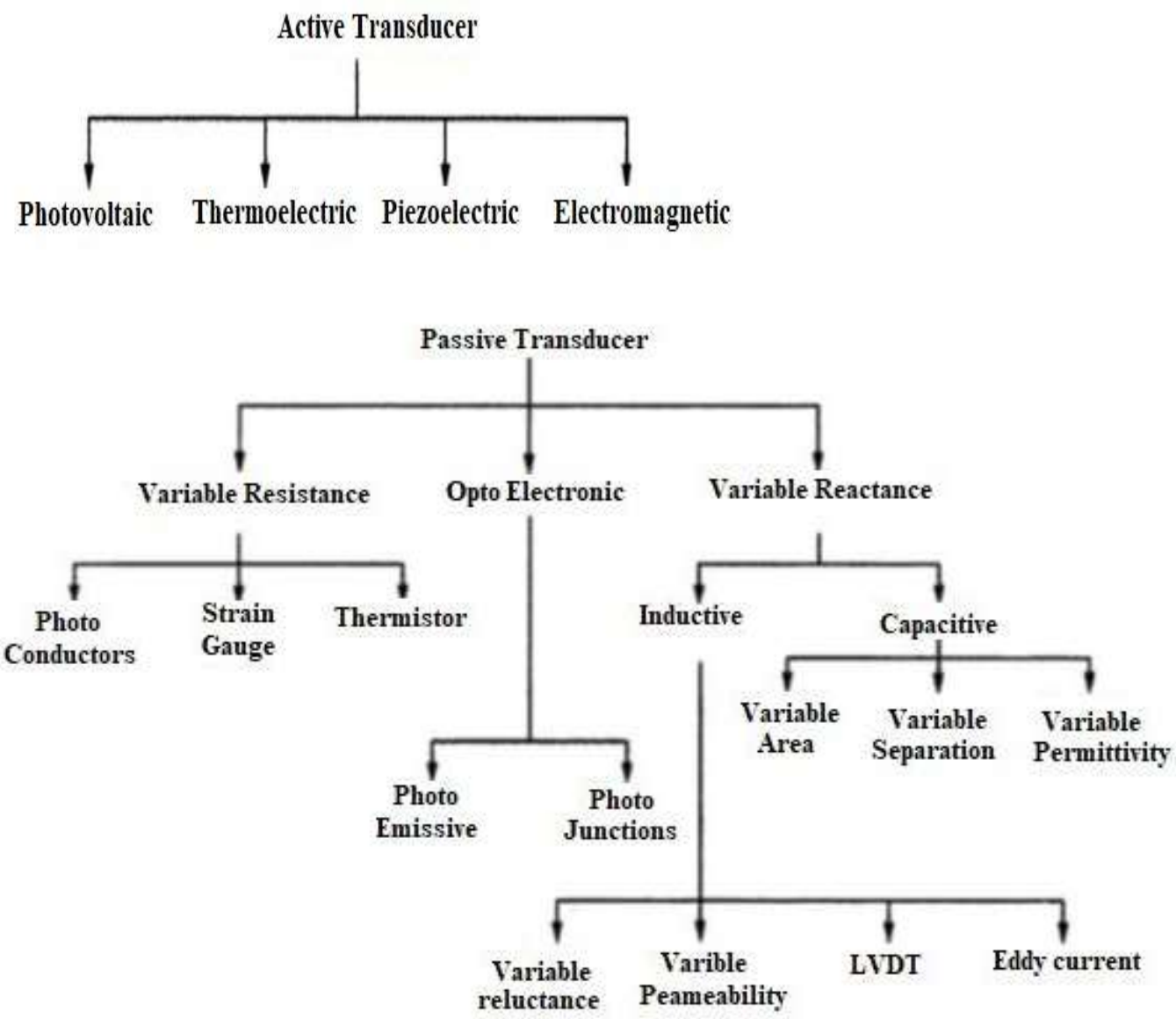

Displacement Transducer

Define : A Displacement Transducer is an electromechanical device used to convert mechanical motion or vibrations into a variable electric signals.

Types:

- Capacitive Transducer
- Inductive
- Variable Inductance
- Linear Variable Differential Transformer

Capacitive Transducer

- A capacitor consists of two conductors (plates) that are electrically isolated from one another by a dielectric medium.
- The principle of operation of capacitive transducers is based upon the equation for capacitance of a parallel plate capacitor as shown below:

$$Capacitance\ C = \frac{\varepsilon A}{d}$$

A = Overlapping area of plates; d = Distance between two plates;
ε = Permittivity (dielectric constant)

- The capacitive transducers are commonly used for measurement of linear displacement, by employing the following effects.

1. Change in area of plates.
2. Change in distance between the two plates.
3. Change in dielectric between the two plates.

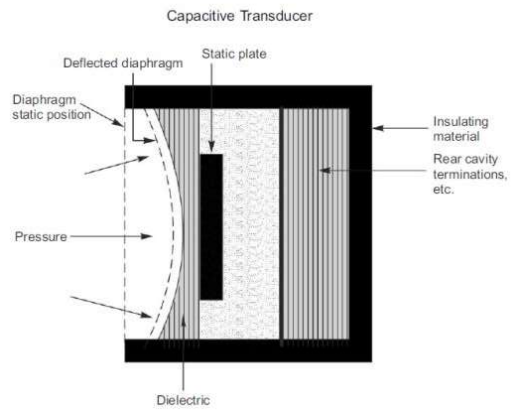

Capacitive Transducer Contd..

Variable capacitance pressure gauge

Principle of operation: Distance between two parallel plates is varied by an externally applied force.

Applications: Measurement of Displacement, pressure.

Capacitor microphone

Principle of operation: Sound pressure varies the capacitance between a fixed plate and a movable diaphragm.

Applications: Speech, music, noise.

Dielectric gauge

Principle of operation: Variation in capacitance by changes in the dielectric.

Applications: Liquid level, thickness.

Inductive Transducer

- The inductive transducers work on the principle of the electromagnetic induction.
- Inductance of the magnetic material depends on a number of variables
  - The number of turns of the coil on the material,
  - The size of the magnetic material
  - The permeability of the flux path.
  - The change in the air gap

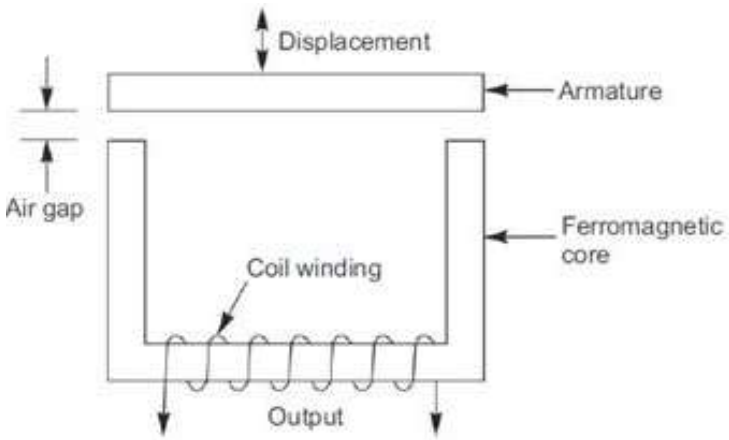

Inductive Transducer Contd..

Magnetic circuit transducer: Self inductance or mutual inductance of ac-excited coil is varied by changes in the magnetic circuit. Applications: Pressure, displacement.

Reluctance pickup: Reluctance of the magnetic circuit is varied by changing the position of the iron core of a coil. Applications: Pressure, displacement, vibration, position.

Differential transformer: The differential voltage of two secondary windings of a transformer is varied by positioning the magnetic core through an externally applied force. Applications: Pressure, force, displacement, position.

Eddy current gauge: Inductance of a coil is varied by the proximity of an eddy current plate. Applications: Displacement, thickness.

Magnetostriction gauge: Magnetic properties are varied by pressure and stress. Applications: Force, pressure, sound.

Linear Variable-Differential Transformer (LVDT)

The linear variable-differential transformer (LVDT) is the most widely used inductive transducer to translate linear motion into electrical signal

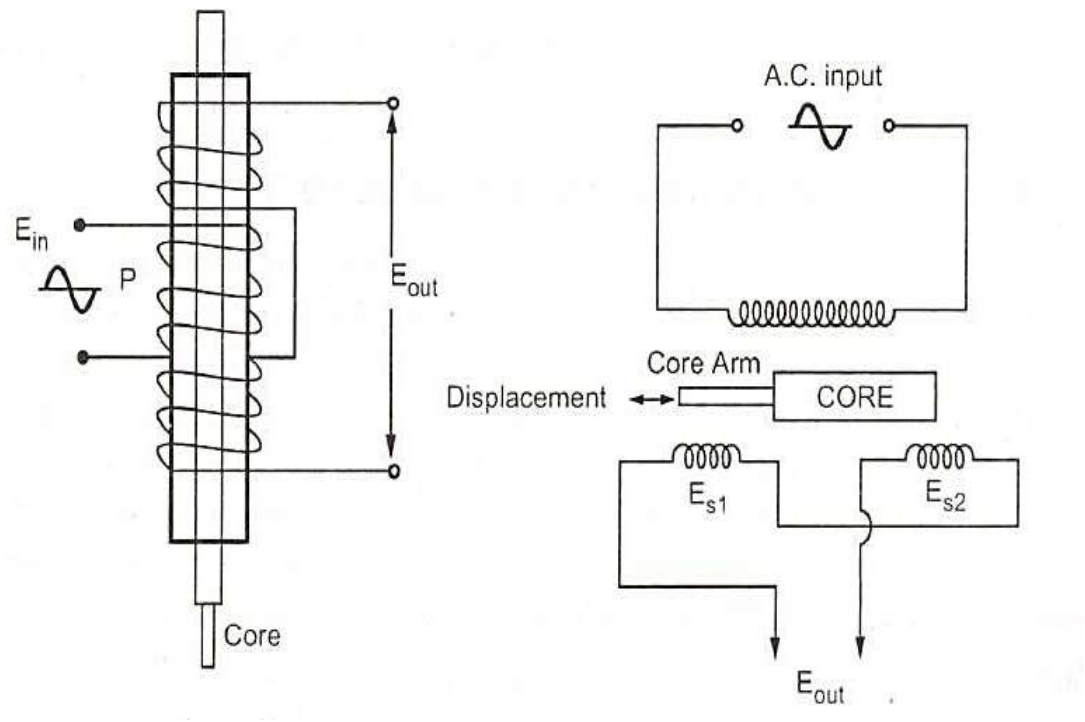

Construction of LVDT

- Consists of a primary winding and two secondary windings.
- A ferro-magnetic core(armature) in the shape of a rod or cylinder is attached to the transducer sensing which slides freely within the hollow portion of the bobbin.
- An a.c. excitation is applied across the primary winding and the movable core varies the coupling between it and the two secondary windings.
- As the core moves away from the centre position, the coupling to one secondary becomes more and hence its output voltage increases, while the coupling and the output voltage of the other secondary decreases.

Working Principle of LVDT

- Any physical displacement of the core causes the voltage of one secondary winding to increase while simultaneously, reducing the voltage in the other secondary winding.
- The difference of the two voltages appears across the output terminals of the transducers and gives a measure of the physical position of the core and hence the displacement.
- When the core is in the neutral or zero position, voltages induced in the secondary windings are equal and opposite and the net output is negligible.
- By comparing the magnitude and phase of output with input source, the amount and direction of movement of core and hence displacement may be determined

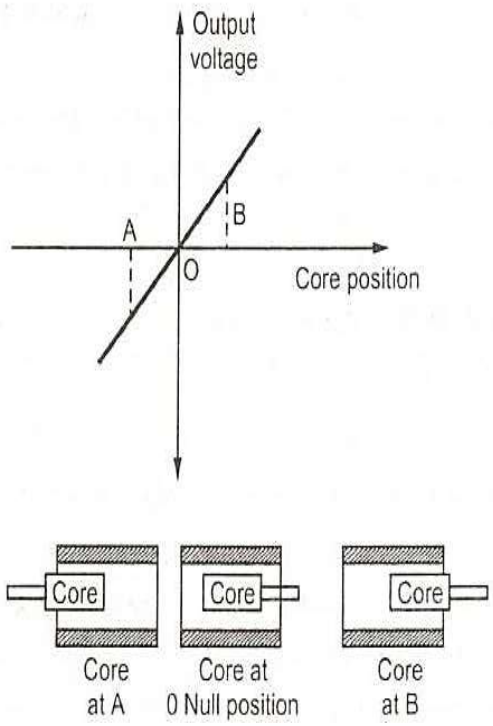

Advt, Disadvt and Uses of LVDT

Advt: 1. High Range -1.25mm to 250mm.

2. Low hysteresis

3. Simple, light in weight and easy to maintain.

4. Low Power Consumption

Disadvt: 1. They are sensitive to stray magnetic fields but shielding is possible.

2. Temperature affects the performance of transducer.

Uses: 1. The LVDT can be used in all applications where displacements ranging from fraction of a mm to a few cm have to be measured.

2. Acting as a secondary transducer it can be used as a device to measure force, weight and pressure.

Strain Gauge

- When the tension is applied to the electrical conductor, its length increases while the cross section area decreases.
- So its resistance changes. This change can be measured to measured.
- Used for the measurement of force, stress and strain.
- A strain gauge is a passive type resistance pressure transducer whose electrical resistance changes when it is stretched or compressed.
- A pressure transducer contains a diaphragm which is deformed by the pressure which can cause a strain gauge to stretch or compress. This deformation of the strain gauge causes the variation in length and cross sectional area due to which its resistance changes.
- The wire filament is attached to a structure under strain and the resistance in the strained wire is measured.

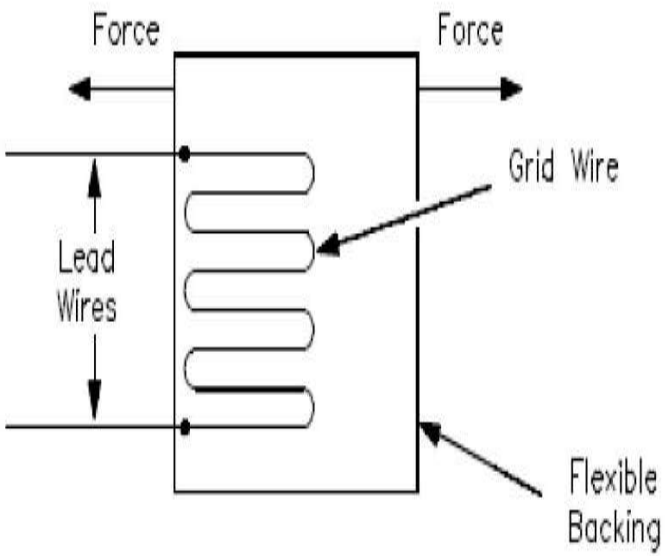

Strain Gauge

- The strain gauge is connected into a Wheatstone Bridge circuit. The change in resistance is proportional to applied strain and is measured with Wheatstone bridge.
- The sensitivity of a strain gauge is described in terms of a characteristic called the gauge factor, defined as unit change in resistance per unit change in length.

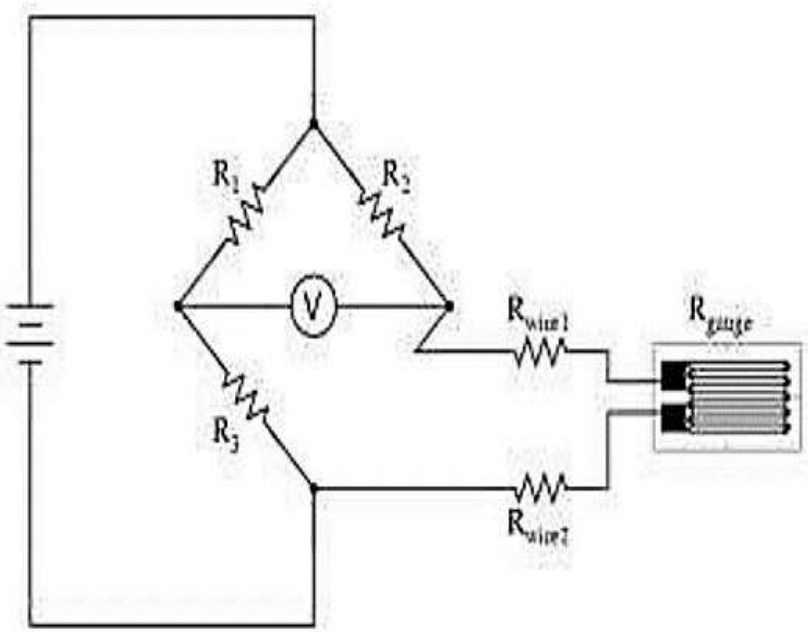

$$K = \frac{\Delta R/R}{\Delta l/l}$$

Advt and Disadvt of Strain Gauge

Advt • There is no moving part.
• It is small and inexpensive.

Disadvt • It is non-linear.
• It needs to be calibrated.

Uses :

- Residual stress
- Vibration measurement
- Torque measurement
- Bending and deflection measurement
- Compression and tension measurement
- Strain measurement

Thermoelectric Transducers

Define – Converts Temperature to electrical signal and vice versa

Types -

1. RTD (Resistance Temperature Detector) -To predict change in electrical resistance of some materials with changing temperature.

2. Thermocouple - To convert thermal potential difference into electric potential difference.

3. Thermistor - Exhibits a large change in resistance proportional to a small change in temperature.

RTD

RTD - Resistance Temperature Detector.

• The change in temperature is detected by the change in resistance of the wire.

• Types:

1. RTD with positive thermal coefficients of resistivity
2. RTD with negative thermal coefficients of resistivity

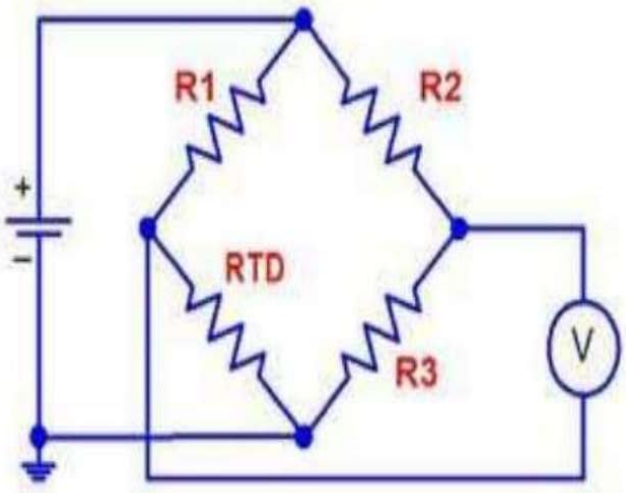

- Materials: Platinum (most popular and accurate), Nickel, Copper, Balco (rare), Tungsten (rare)

- RTDs are used for temperature measurements by using them in bridge circuits.
- The change in temperature causes considerable resistance change which gives a voltage drop in accordance with the thermal coefficient of resistance of the wire.

Thermocouple

A thermocouple is formed by two different metals joined at one point

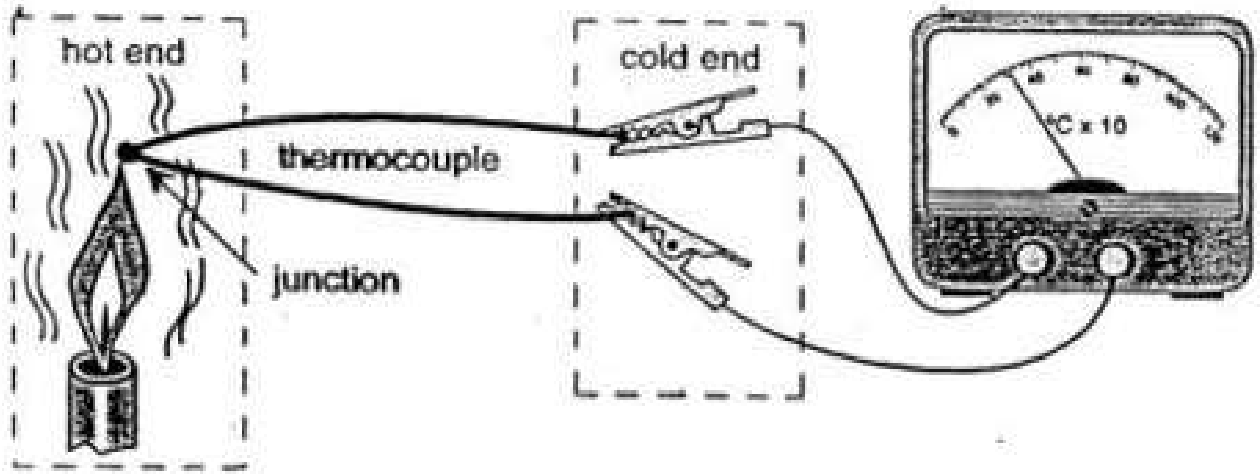

As the junction temperature increases a small voltage is created in the loop. The voltage produced at the junction of the dissimilar metals is due to a phenomenon called the "Seebeck Effect".

- The higher the temperature at the junction, the greater the voltage produced by that junction.

- The relationship between voltage and temperature is constant and therefore will graph as a linear line.

Thermistor

- Measures temperature according to change in resistance.
- Made of a sintered semiconductor material.
- Use ceramic or polymer materials
- Available in various shapes like disc, rod, washer, etc.

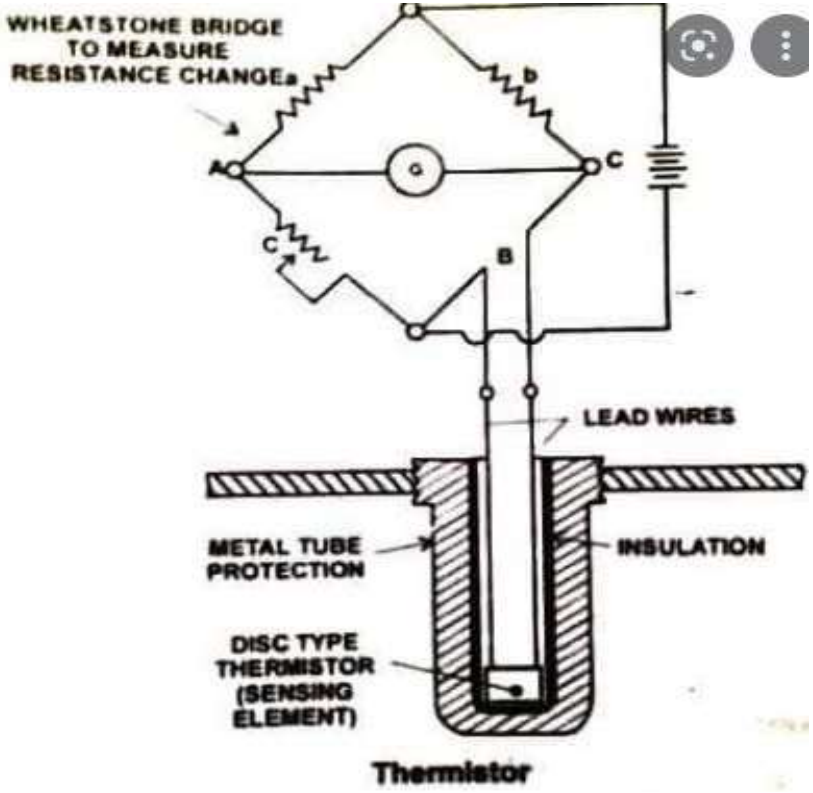

Semi-conductor thermistors have a Negative Temperature Coefficient (NTC). i.e. as temperature increases, the resistance decreases.

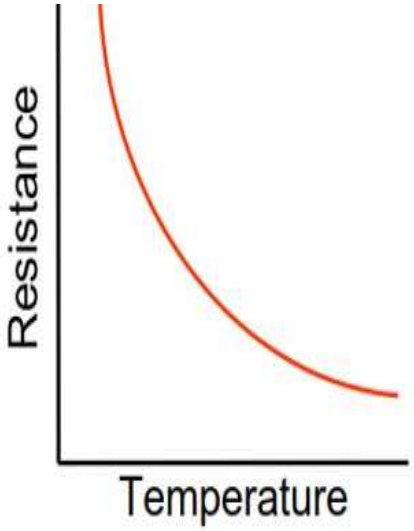

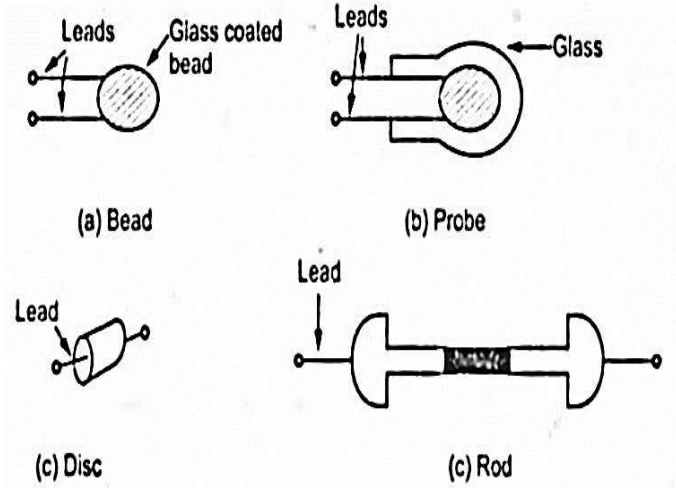

Photoelectric Transducers

Define : Converts light energy to electrical energy and vice versa.

Types:

- Laser diode, light-emitting diode - convert electrical power into forms of light.
- Photodiode, photo resistor (LDR), phototransistor, photomultiplier tube - converts changing light levels into electrical form.

Light-Emitting Diode

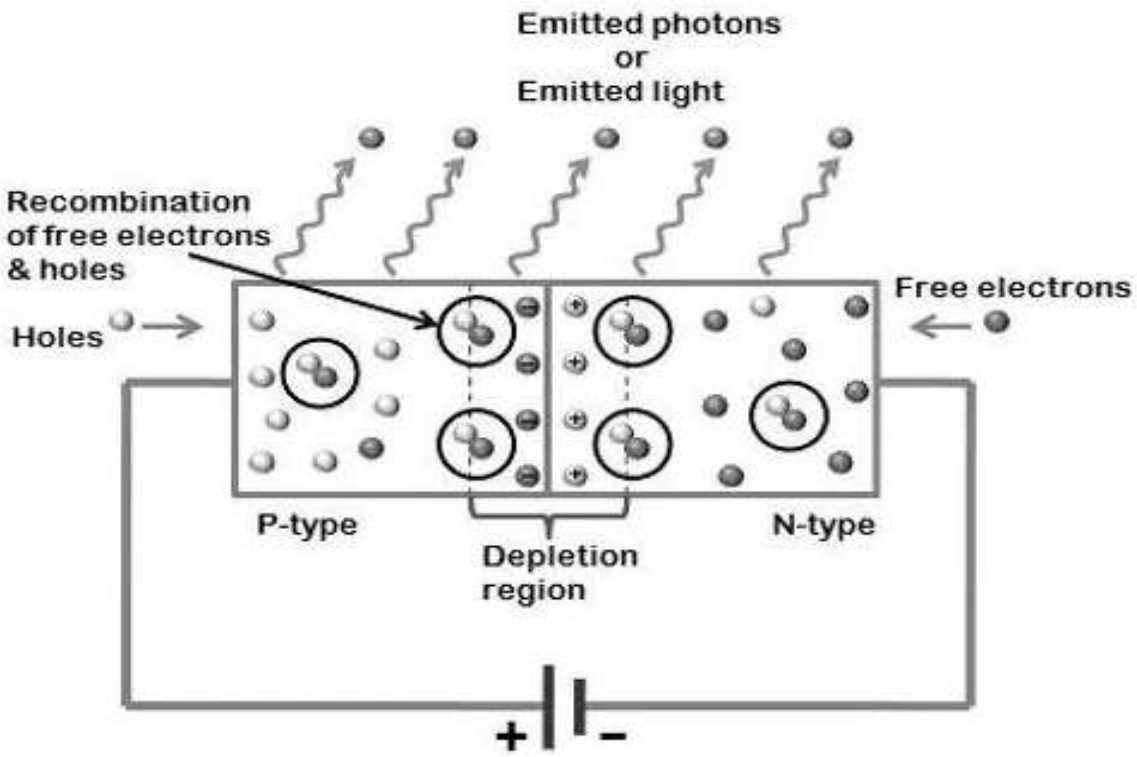

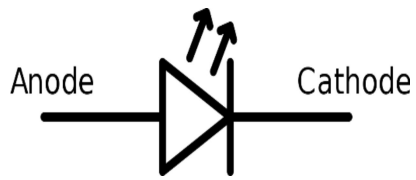

- LED diode works when it is forward biased. In this case, the n-type semiconductor is heavily doped than the p-type forming the p-n junction. When it is forward biased, the potential barrier gets reduced and the electrons and holes combine at the depletion layer (or active layer), light or photons are emitted or radiated in all directions.

Light-Emitting Diode

- When sufficient voltage is applied to the chip across the leads of the LED, electrons can move easily in only one direction across the junction between the p and n regions.

- When a voltage is applied and the current starts to flow, electrons in the n region have sufficient energy to move across the junction into the p region.

- Each time an electron recombines with a positive charge, electric potential energy is converted into electromagnetic energy. • For each recombination of a negative and a positive charge, a quantum of electromagnetic energy is emitted in the form of a photon of light with a frequency characteristic of the semi-conductor material.

- LEDs are made from gallium-based crystals that contain one or more additional materials such as phosphorous to produce a distinct color. • Different LED chip technologies emit light in specific regions of the visible light spectrum and produce different intensity levels.

- LEDs are available in red, orange, amber, yellow, green, blue and white.

Laser Diode

- LASER stands for **Light Amplification by Stimulated Emission of Radiation.**
- A laser diode is an electronic device, which converts electrical energy into light energy to produce high-intensity coherent light.
- Laser diode is very small in size and appearance.
- It is similar to a transistor and has operation like LED but it emit coherent light.
- The material which often used in Laser diode is the gallium Arsenide (GaAs).
- It work on forward biasing.

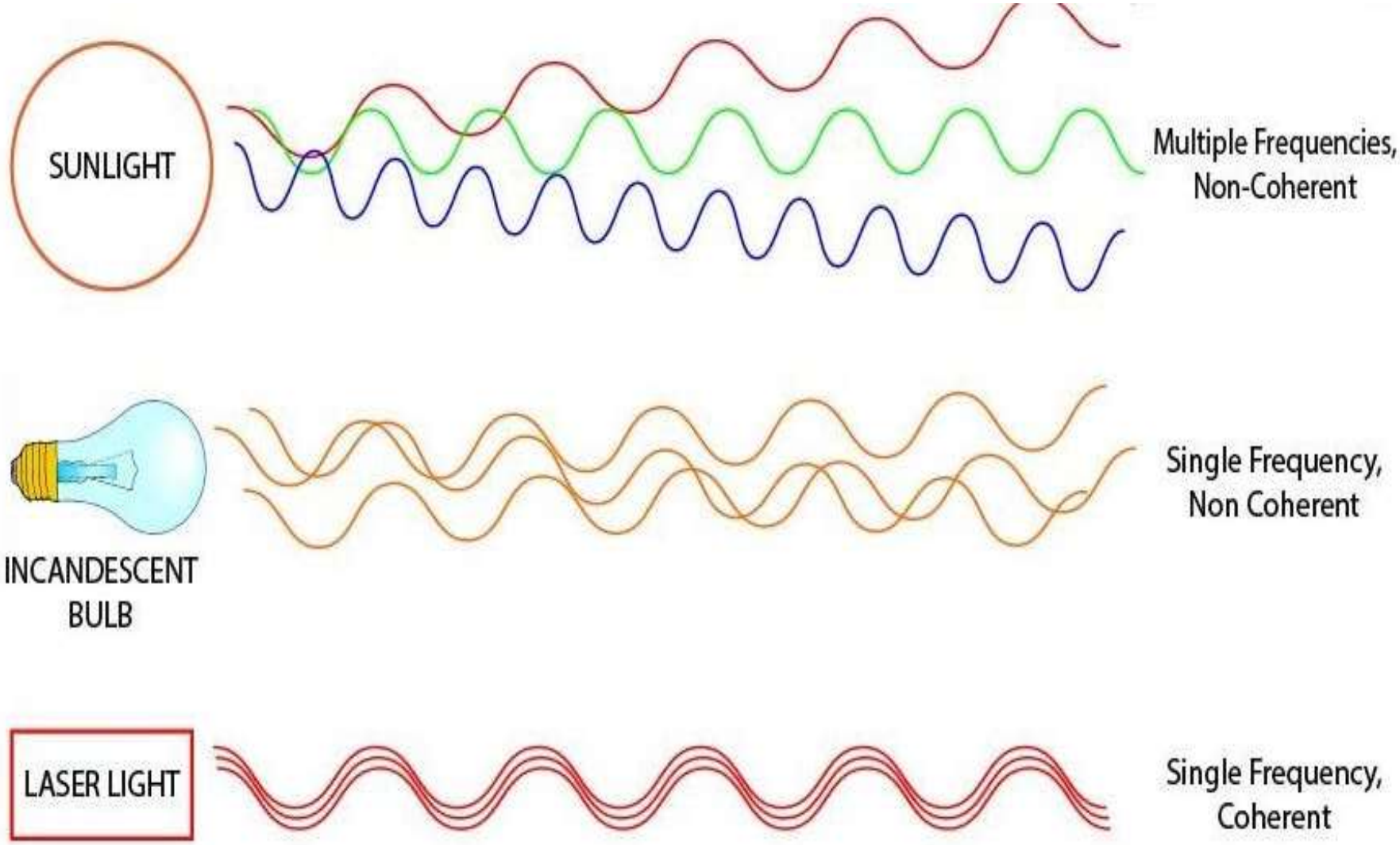
SUNLIGHT
Multiple Frequencies,
Non-Coherent
INCANDESCENT
BULB
Single Frequency,
Non Coherent
LASER LIGHT
Single Frequency,
Coherent

Laser Diode

- When DC voltage is applied across the laser diode, the free electrons move across the junction region from the n-type material to the p-type material.

- In this process, some electrons will directly interact with the valence electrons and excites them to the higher energy level and releases energy in the form of light. This process of emission is called spontaneous emission.

- The photons generated due to spontaneous emission will travel through the junction region and stimulate the excited electrons (free electrons). As a result, more photons are released.

- This process of light or photons emission is called stimulated emission.

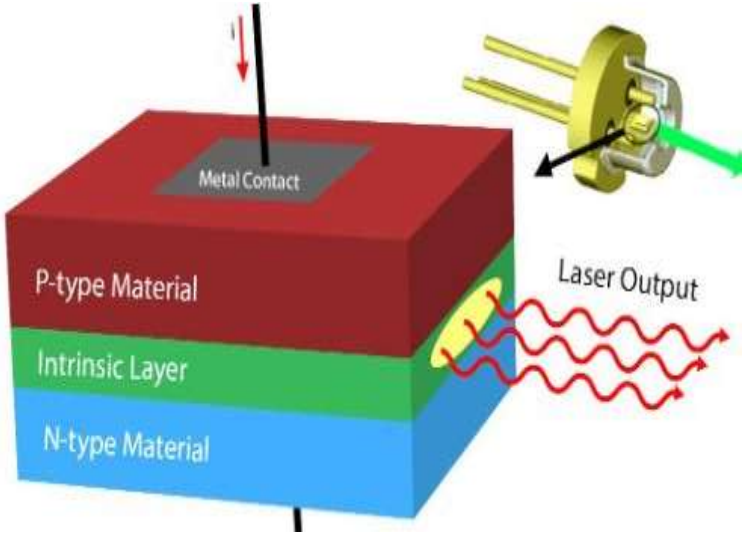

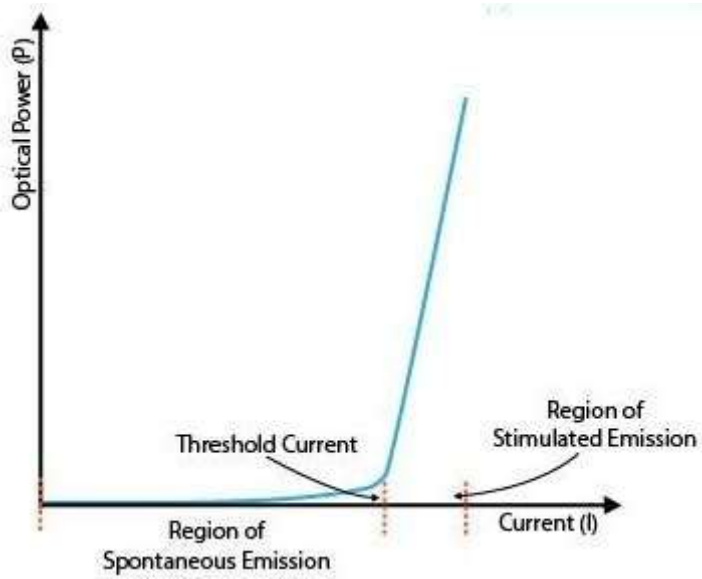

Photo Diode

- A photodiode is a PN-junction diode that consumes light energy to produce electric current.
- It is also called as photo-detector, a light detector, and photo-sensor.
- A photodiode is one type of light detector, used to convert the light into current or voltage based on the mode of operation of the device.
- It comprises of optical filters, built-in lenses and also surface areas.
- These diodes are particularly designed to work in reverse bias condition.
- The working principle of a photodiode is, when a photon of ample energy strikes the diode, it makes a couple of an electron-hole.
- Therefore, holes in the region move toward the anode, and electrons move toward the cathode, and a photocurrent will be generated.

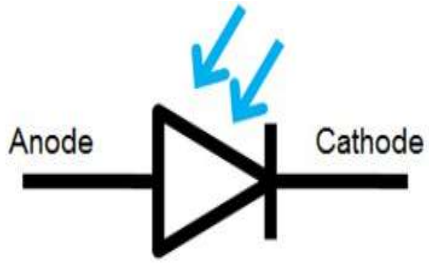

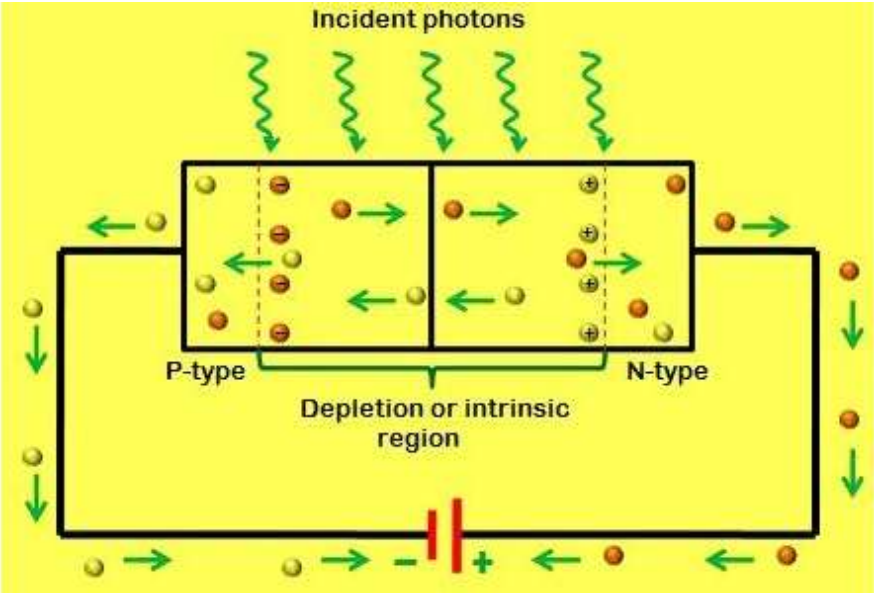

Photoresistor (LDR)

- Photoresistor is a variable resistor whose resistance varies inversely with the intensity of light
- Photoresistors are also known as photoconductive cells or just photocell.
- When light is incident on the photoresistor, photons get absorbed by the semiconductor material.
- The energy from the photon gets absorbed by the electrons.
- When these electrons acquire sufficient energy to break the bond, they jump into the conduction band.
- Due to this, the resistance of the photoresistor decreases. With the decrease in resistance, conductivity increases.
- In the absence of light, the photoresistor can have resistance values in megaohms.
- During the presence of light, its resistance can decrease to a few hundred ohms.

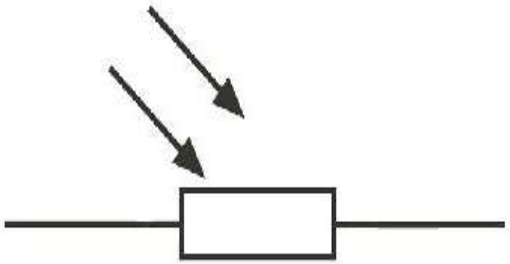

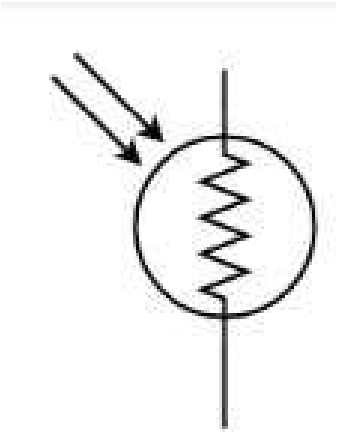

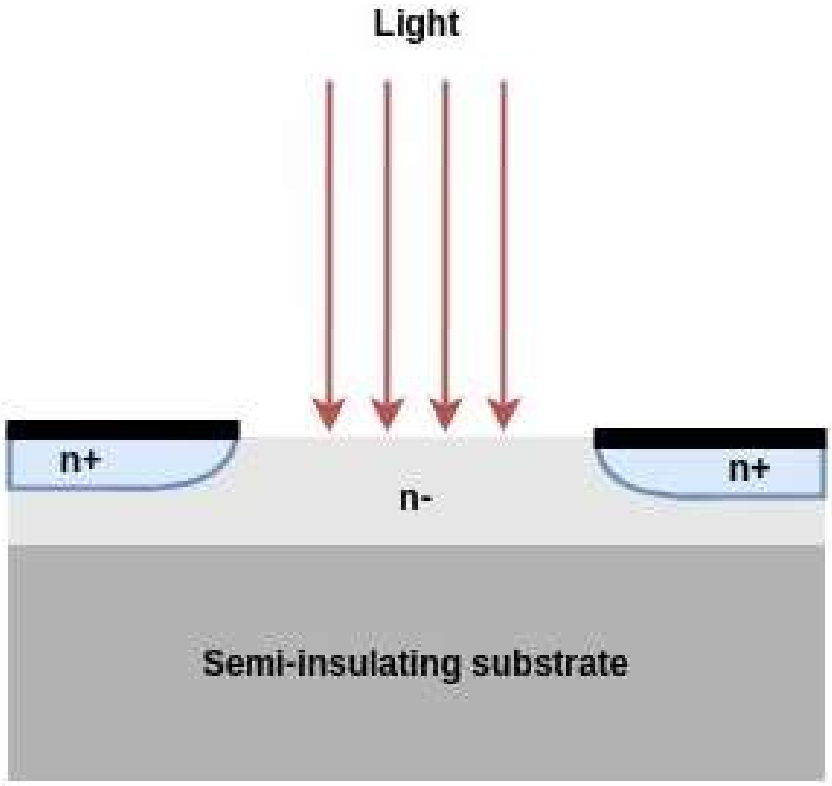

Internal Structure of LDR

- LDR consist of a resistor made up of semiconductor material.
- Cadmium sulphide and cadmium selenide are the most commonly used materials for constructing these resistors.

Phototransistor

- It is a device to convert light energy into electrical energy.

- The construction of phototransistor is similar to the ordinary transistor, except the base terminal. In phototransistor, the base terminal is not provided, and instead of the base current, the light energy is taken as the input.

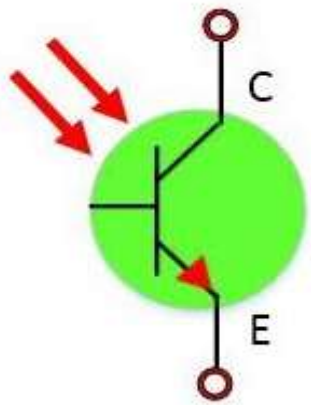

- The phototransistor is a three-layer semiconductor device which has a light-sensitive base region. The base senses the light and converts it into the current which flows between the collector and the emitter reg

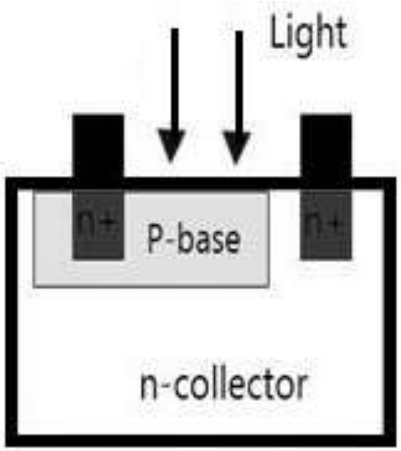

Photovoltaic or Solar Cell

- The Photovoltaic cell is the semiconductor device that converts the light into electrical energy.
- The voltage induces by the PV cell depends on the intensity of light incident on it.
- The semiconductor materials like arsenide, indium, cadmium, silicon, selenium and gallium are used for making the PV cells.
- Figure shows the constructions of the silicon photovoltaic cell.
- The upper surface of the cell is made of the thin layer of the p-type material so that the light can easily enter into the material.
- The metal rings are placed around p-type and n-type material which acts as their positive and negative output terminals respectively.

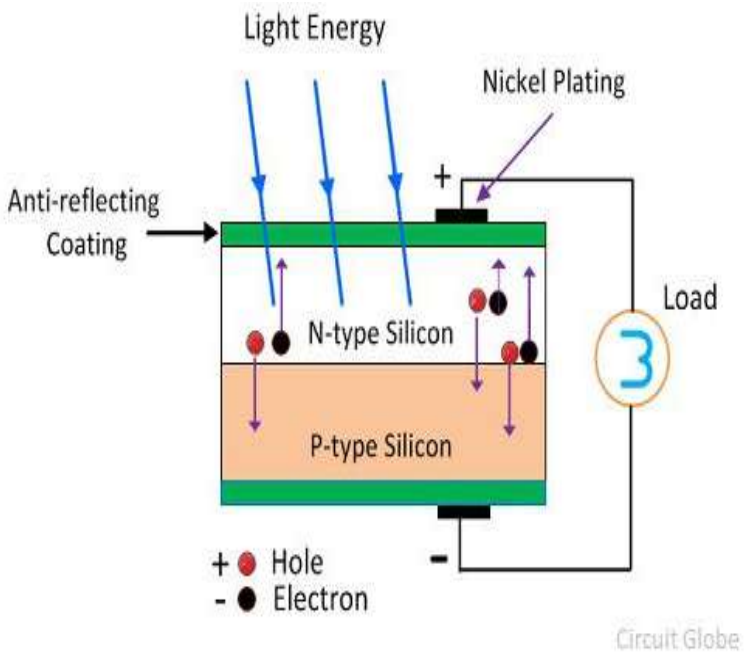

Photovoltaic or Solar Cell

- The multi-crystalline or monocrystalline semiconductor material make the single unit of the PV cell.
  - The mono-crystal cell is cut from the volume of the semiconductor material.
  - The multicell are obtained from the material which has many sides.
- The output voltage and current obtained from the single unit of the cell is very less.
- Many cells together is said to be Solar Panel.

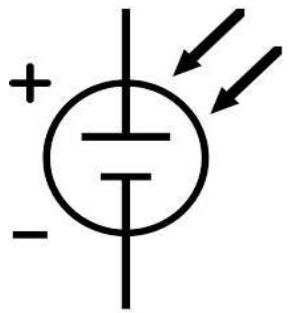

Optocouplers

- An optocoupler or optoelectronic coupler is an electronic component that basically acts as an **interface** between the two separate circuits with **different voltage levels**. Optocouplers are common component by which electrical isolation can be supplied between the input and output source. It is a **6 pin device** and can have any number of photodetectors.

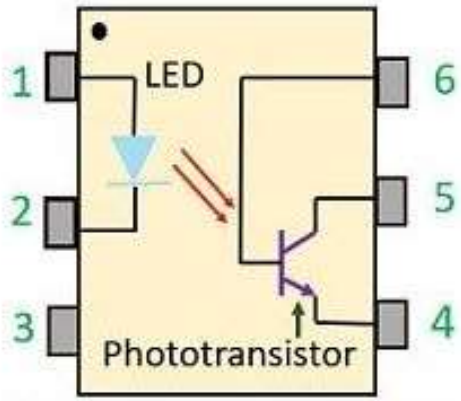

Isolating Optocoupler

- ❑ An optocoupler mainly consists of an **infrared LED** and a **photosensitive device** that detects the emitted infrared beam. The semiconductor photosensitive device can be a photodiode, phototransistor, a Darlington pair, SCR or TRIAC.

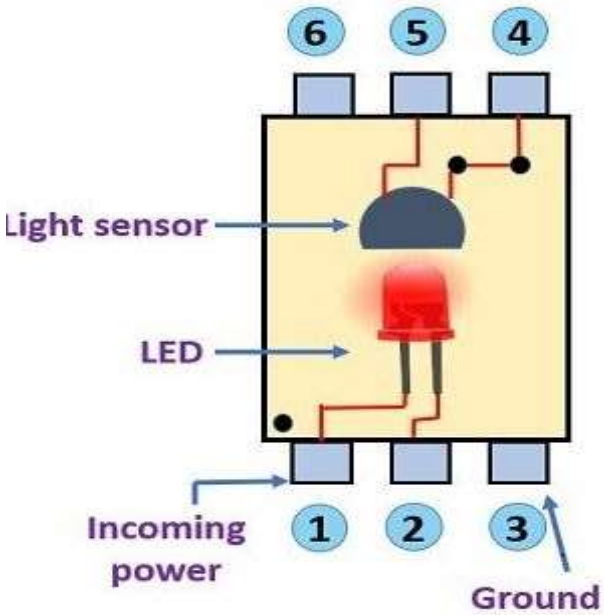

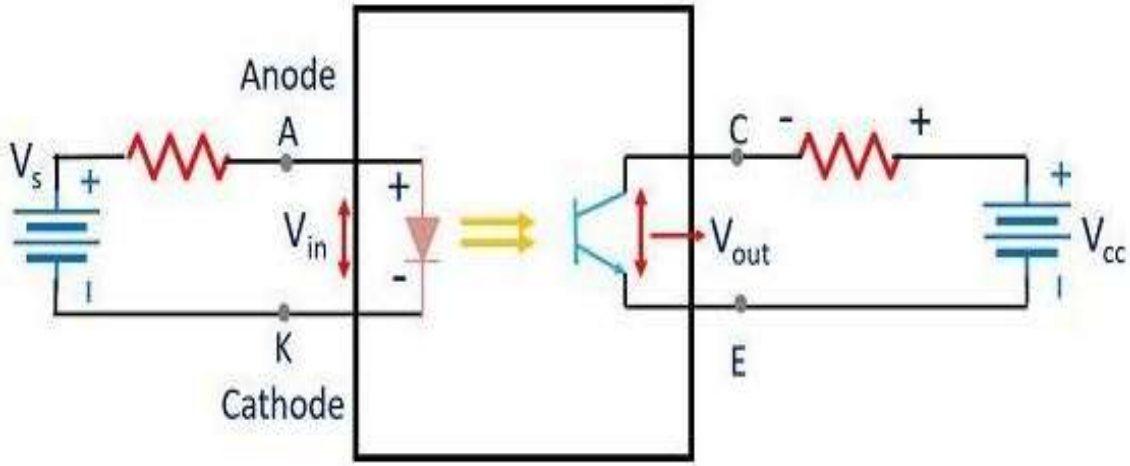

- When a high voltage appears across the input side of the Optocoupler, a current start to flow through the LED. Due to this current LED will emit light. This emitted light when falls on a [phototransistor]() cause a current to flow through the same.
- The **current** flowing through the phototransistor is **directly proportional** to the **supplied input voltage**. An input resistance placed at the beginning of the circuit will decrease the amount of current flowing through the LED if its value is increased. As the LED glows due to this current, hence, when current will be low so as the light intensity of LED.

Piezoelectric Transducer

- A piezoelectric transducer (also known as a piezoelectric sensor) is a device that uses the piezoelectric effect to measure changes in acceleration, pressure, strain, temperature or force by converting this energy into an electrical charge.

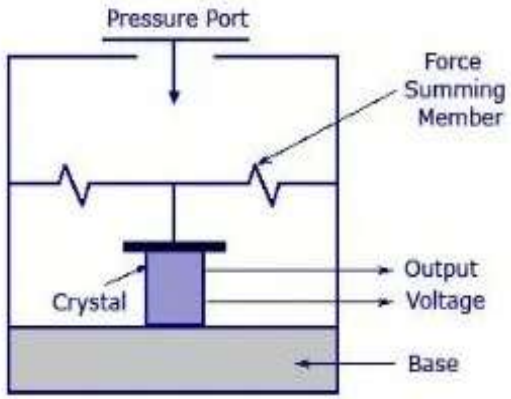

- ❑ The piezoelectric **material** is one kind of transducers. When we squeeze this piezoelectric material or apply any force or pressure, the transducer converts this energy into voltage.
- ❑ Electric voltage produced by a piezoelectric transducer can be easily measured by the voltage measuring instruments.

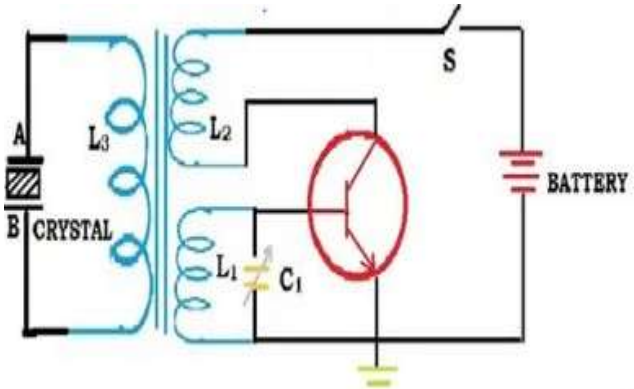

- This voltage will be a function of the force or pressure applied to it, we can infer what the force/pressure was by the voltage reading. In this way, physical quantities like mechanical stress or force can be measured directly by using a piezoelectric transducer

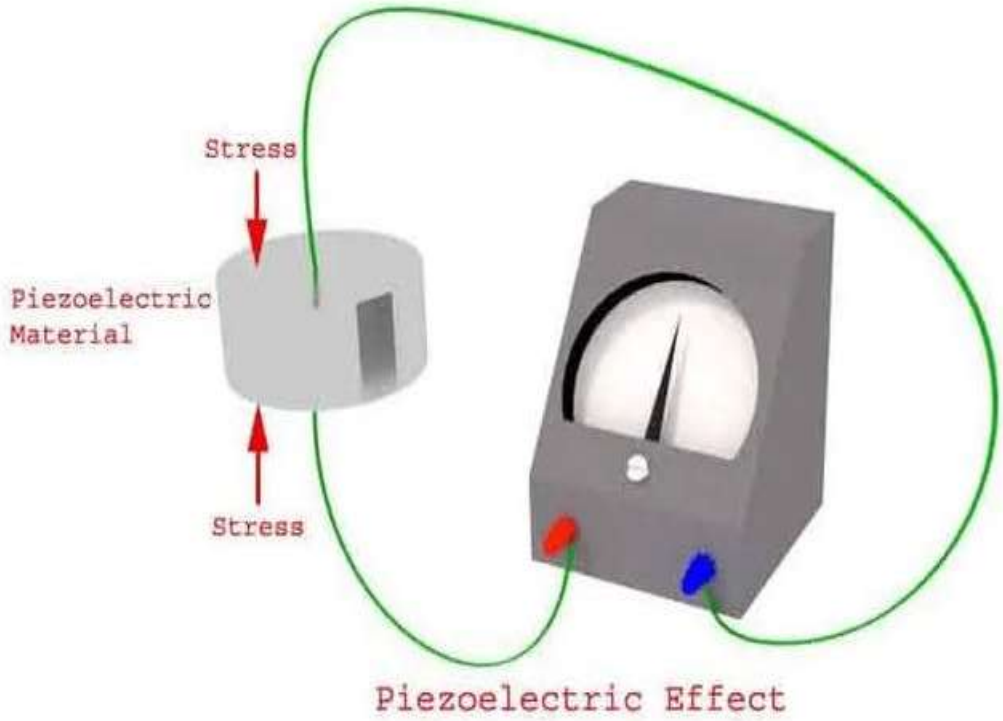

Hall Effect Transducer

- Hall Effect Transducer is a device which is used for the measurement of magnetic field strength. This transducer uses a conducting strip to convert magnetic field into proportional potential difference across the opposite faces of strip using Hall Effect.

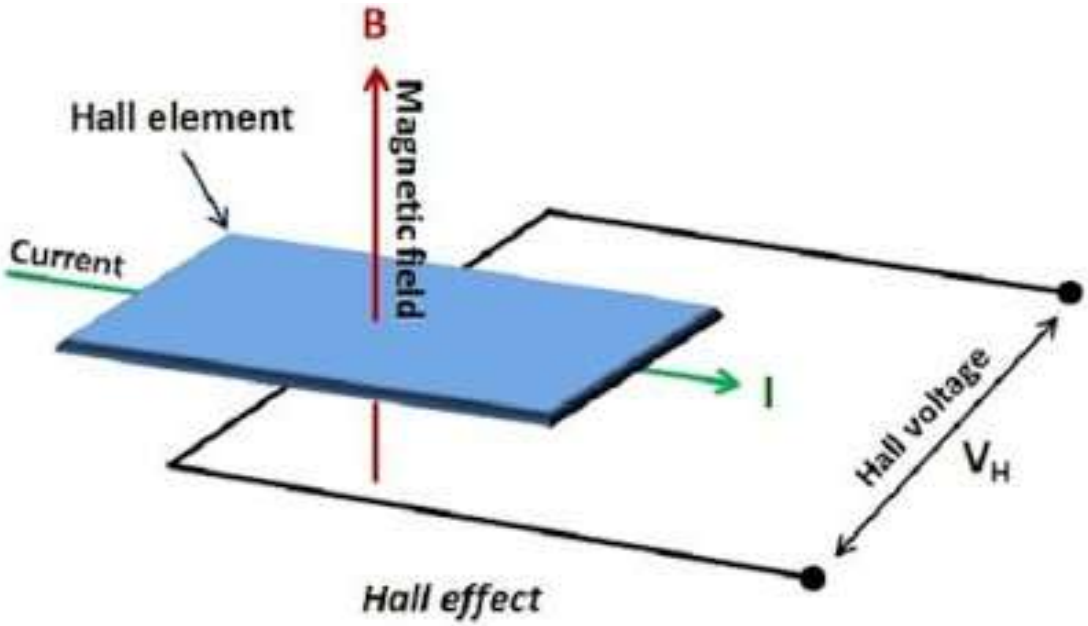

- Hall Effect is basically the process of development of potential difference across the two faces of a current carrying strip when the strip is kept in a magnetic field.
- The magnitude of voltage depends upon the current, strength of magnetic field and the property of conducting material. The Hall Effect is found in conducting material and semiconductor in varying amount depending upon the density and mobility of current carrier.

Liquid Crystal Display

- ✔An LCD panel is made of many layers. These consist of a polariser, polarised glass, LCD fluid, conductive connections etc.
- ✔Polarisation is a process in which the vibration of light waves is restricted to a single plane, resulting in the formation of light waves known as polarised light.
- ✔Since liquid crystals do not produce light of their own, they need an external light source to work. An LCD panel has sets of polarised glass consisting of liquid crystal materials in between them.
- ✔When the external light passes through one of the polarised glasses and electric current is applied on the liquid crystal molecules, they align themselves in such a way that polarised light travels from the first layer to the second polarised glass, causing an image to appear on the screen.

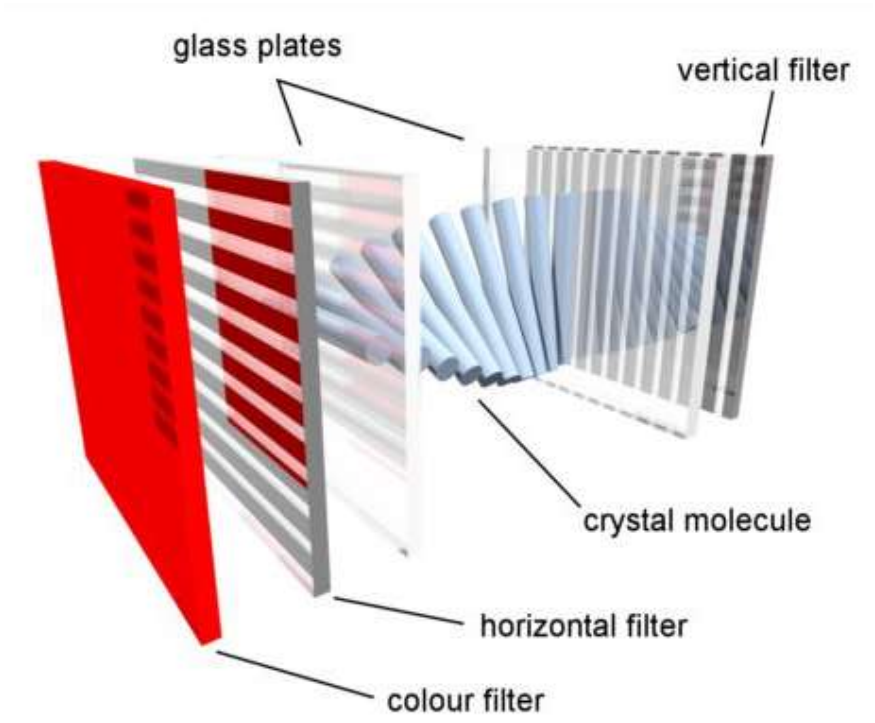

- Types of LCD

Reflective

- This type of LCD has a mirror layer. When a light ray within an LCD is reflected by the mirror layer, then visible patterns are produced on the LCD.

Transmissive

- Here the LCD has a backlight, which passes through the LCD polarised glass to produce visible pattern. But because it uses backlight for working, the images displayed in such LCD types appear very dim when used under bright sunlight.

Transflective

- This LCD type has a reflective mirror layer and a backlight. It uses both outside light and backlight, making it suitable for indoor and outdoor conditions.

MEASURING INSTRUMENTS

"The device used **for comparing the unknown quantity with the unit of measurement or standard quantity is called** a Measuring Instrument."

OR

"An instrument may be defined as a machine or system which is designed to maintain functional relationship between prescribed properties of physical variables & could include means of communication to human observer."

CLASSIFICATION OF INSTRUMENTS

Electrical measuring instruments are classified as follows:

I. Depending on the quantity measured	e.g.	Voltmeter, Ammeter, Wattmeter, Energymeter, Ohmmeter.
II. Depending on the different principles used for their working	e.g.	Moving Iron type, Moving coil type, Dynamometer type, Induction type.
III. Depending on how the quantity is measured?	e.g.	Deflecting type, Integrating type, Recording type.

CLASSIFICATION OF INSTRUMENTS

Electrical measuring instruments may also be classified according to the kind of quantity, kind of current, principle of operation of moving system.

CLASSIFICATION OF SECONDARY INSTRUMENTS

- Secondary instruments can be classified into three types;
  - i. Indicating instruments;
  - ii. Recording instruments;
  - iii. Integrating instruments.

Indicating Instruments:

It indicate the *magnitude of an electrical quantity at the time when it is being measured*.

The indications are given by a *pointer moving over a graduated dial.*

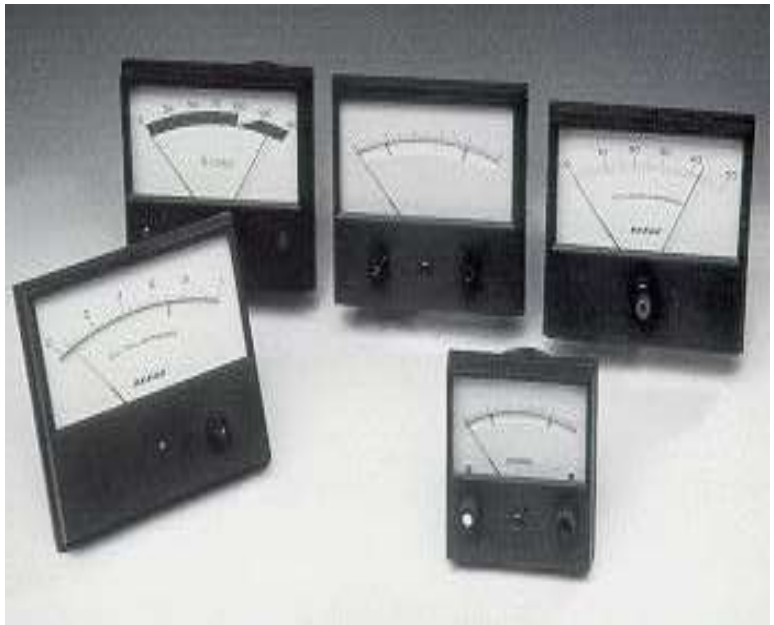

- ***Recording Instruments:***

The instruments which keep a continuous record of the variations of the magnitude of an electrical quantity to be observed over a defined period of time.

Examples

X-Ray

ECG

ERG

EMG

- ***Integrating Instruments***:

The instruments which measure the total amount of either quantity of electricity or electrical energy supplied over a period of time. For example **Energy Meters**.

1 MOVING COIL INSTRUMENTS

1 A. PERMANENT MAGNET MOVING COIL INSTRUMENT [PMMC]

Principle A current carrying coil is placed in a magnetic field, a force is exerted. It tends to act on the coil and moves it away from the field. This movement of the coil is used to measure current or voltage.

Construction (Refer Figs. 7.9 and 7.10). N and S refer to the pole pieces of a permanent magnet. A soft iron core in the form of a cylinder is placed in the space between the poles (C). In the permanent magnetic field is placed a rectangular coil of many turns (MC) wound on a former (AF). The former is made of aluminium or copper. To the moving coil is attached the spindle (S_p). Two helical springs (S_g) are connected to the spindle to give the necessary control torque. A pointer (p) attached to the spindle is made to move over a calibrated scale.

Working A magnetic field of sufficient density is produced by the permanent magnet. The moving coil carries the current or a current proportional to the voltage to be measured. Hence, an electromagnetic force is produced which tends to act on the moving coil and moves it away from the field. This movement makes the spindle move and so the pointer gives a proportionate deflection.

PMMC

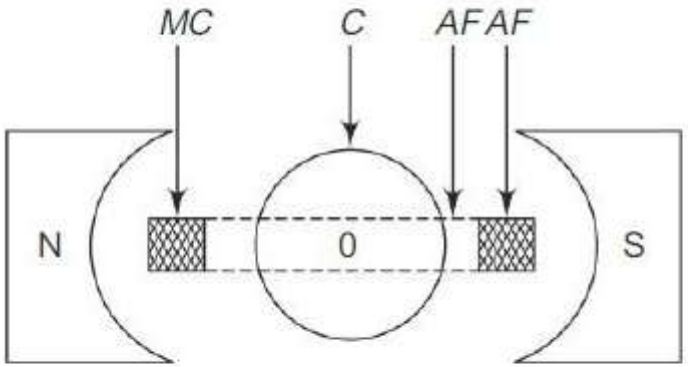

Fig. 7.9

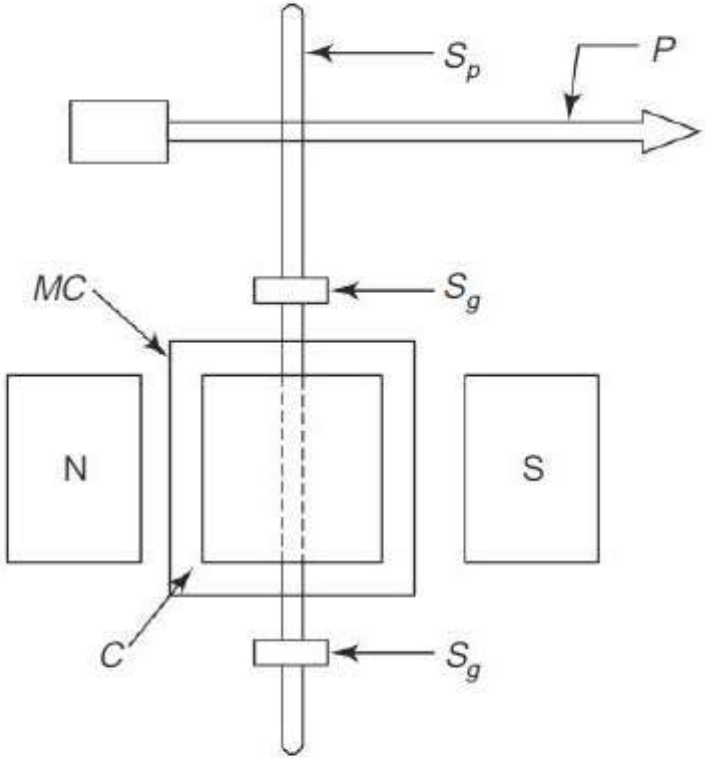

Fig. 7.10

Deflecting torque	... It is directly proportional to the current or the voltage to be measured. So, the instrument can be used to measure direct current and dc voltage.
Control torque	... Spring control
Damping torque	... Eddy current damping. When the moving coil made of aluminium former is moved due to the force exerted on it, it cuts the magnetic flux lines produced by the permanent magnet. Hence, eddy currents are induced in the former.

As per Lenz's law, these eddy currents produce the required damping torque opposing the motion of the moving coil.

1 B DYNAMOMETER TYPE MOVING COIL INSTRUMENT

Principle Working principle of this type of instrument is same as that of permanent magnet moving coil type. But, the difference is that there is no permanent magnet in this instrument. Both the operating fields are produced by the current and/or the voltage to be measured.

Construction (Refer Fig. 7.11). The fixed coil (*FC*) is made in two sections. In the space between these two sections, a moving coil (*MC*) is placed. The moving coil is attached to the spindle to which is attached a pointer. The pointer is allowed to move over a calibrated scale. Two helical springs are attached to the spindle to give the required control torque. A piston attached to the spindle is arranged to move inside an air chamber.

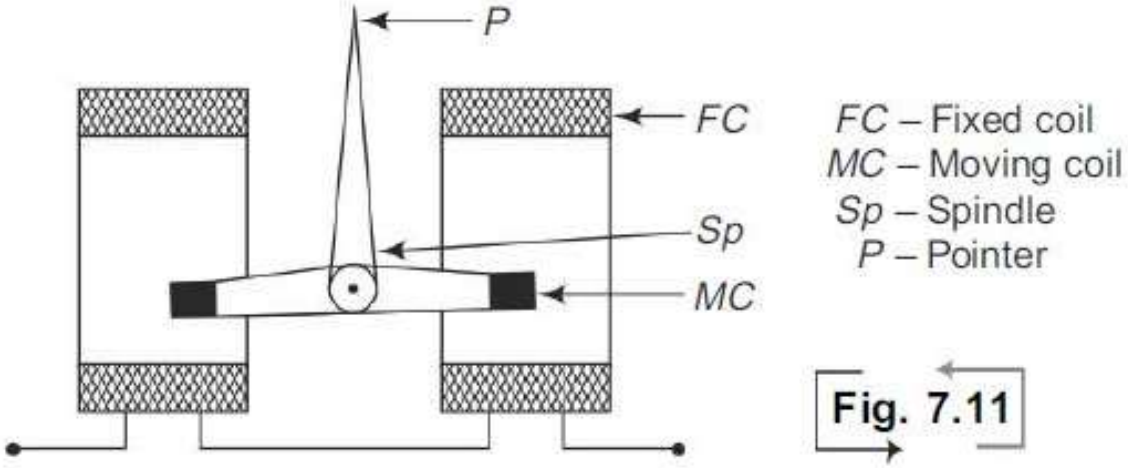

Fig. 7.11

Working The fixed coil and the moving coil carry currents. Thus, two magnetic field are produced. Hence, an electromagnetic force tends to act on the moving coil and makes it move. This makes the pointer give a proportionate deflection.

Deflecting Torque

(a) *As voltmeter* The two coils are electrically in series. They carry a current proportional to the voltage to be measured. The deflecting torque is proportional to $(\text{voltage})^2$. Hence, the instrument can be used for measuring dc and ac voltages.

(b) *As ammeter* The two coils are electrically in series. They carry the current to be measured. The deflecting torque is proportional to $(\text{current})^2$. Hence, the instrument can be used for measuring dc and ac.

(c) *As wattmeter* Fixed coils carry the system current. Moving coil carrys a current proportional to the system voltage. The design is such that the deflecting torque is proportional to $VI \cos \phi$, i.e power to be measured.

Control torque: Spring Control

Damping torque: Air damping

2 MOVING IRON INSTRUMENTS

2A ATTRACTION TYPE

Moving Iron Instruments are used mainly to measure voltage or current.

Principle It is well known that a soft iron piece gets magnetised when it is brought into a magnetic field produced by a permanent magnet. The same phenomenon happens when the soft iron piece is brought near either of the ends of a coil carrying current. The iron piece is attracted towards that portion where the magnetic flux density is more. This movement of the soft iron piece is used to measure the current or voltage which produces the magnetic field.

Construction (Refer Fig. 7.7). The instrument consists of a working coil. It carries the current to be measured or a current proportional to the voltage to be measured. A soft iron disc is attached to the spindle. To the spindle, a pointer is also attached. The pointer is made to move over a calibrated scale. The moving iron (soft iron disc) is pivoted such that it is attracted towards the centre of the coil where the magnetic field is maximum.

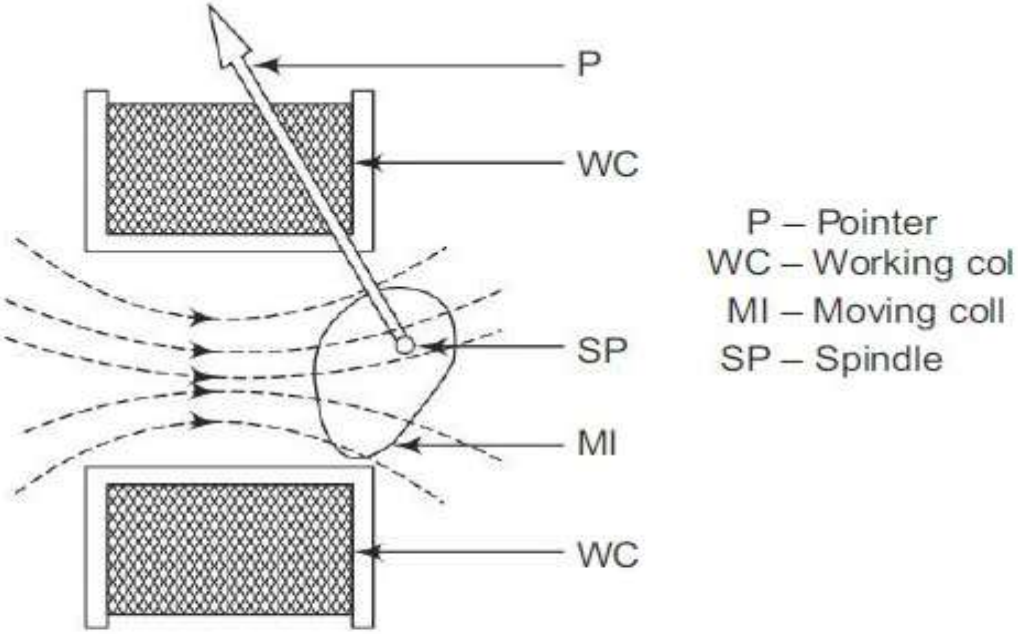

Fig. 7.7

Working The working coil carries a current which produces a magnetic field. The moving disc is attracted towards the centre of the coil where the flux density is maximum. The spindle is, therefore, moved. Thus, the pointer, attached to the spindle gives a proportional deflection.

Deflecting Torque Produced by the current or the voltage to be measured. It is proportional to the square of the current or voltage. Hence, the instrument can be used to measure d.c. or a.c scale is non-uniform.

Control torque: Spring or gravity

Damping: Air friction damping

2B REPULSION TYPE MOVING IRON INSTRUMENT

Principle Two iron pieces kept with close proximity in a magnetic field get magnetized to the same polarity. Hence, a repulsive force is produced. If one of the two pieces is made movable, the repulsive force will act on it and move it on to one side. This movement is used to measure the current or voltage which produces the magnetic field.

Construction (Refer Fig. 7.8). The instrument consists of a working coil which carries a current proportional to voltage or the current to be measured. There are two iron pieces-fixed and moving. The moving iron is connected to the spindle to which is attached a pointer. It is made to move over a calibrated scale.

Working When the operating coil carries current, a magnetic field is produced. This field magnetises similarly both the soft iron pieces. Thus, a repulsive force is produced which acts on the moving iron and pushes it away from its rest position. Thus, the spindle moves and hence the pointer gives a proportionate deflection. Whatever be the direction of current in the coil, the two irons are always similarly magnetised.

Deflecting Torque Produced by the current or the voltage to be measured it is proportional to the square of the current or voltage. Hence, the instrument can be used for dc and ac.

Control torque: Spring or Gravity

Damping: Pneumatic (i.e air damping)

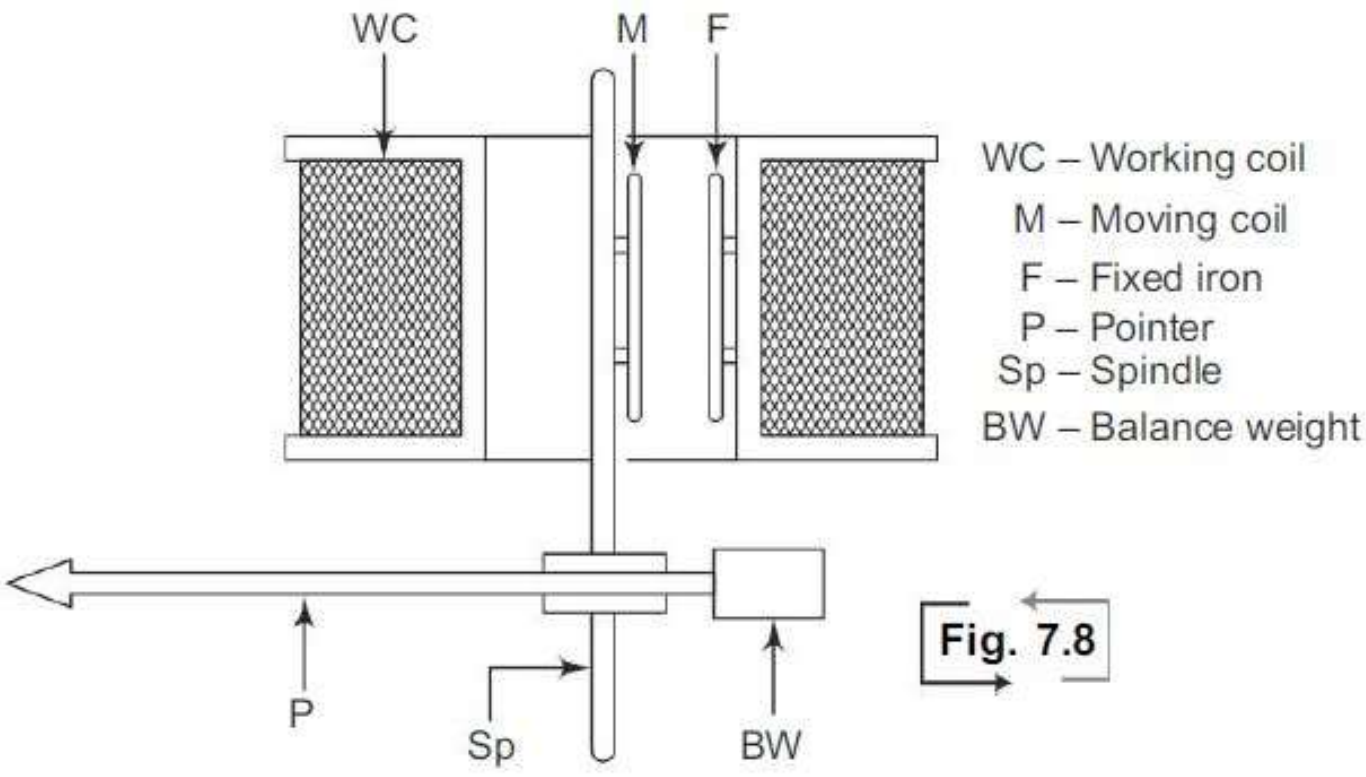

Fig. 7.8

NOTE:

1. MC instruments are used for the measurement of DC Quantities only.
2. MI instruments are used for the measurement of both DC & AC Quantities.

Digital Storage Oscilloscope (DSO)

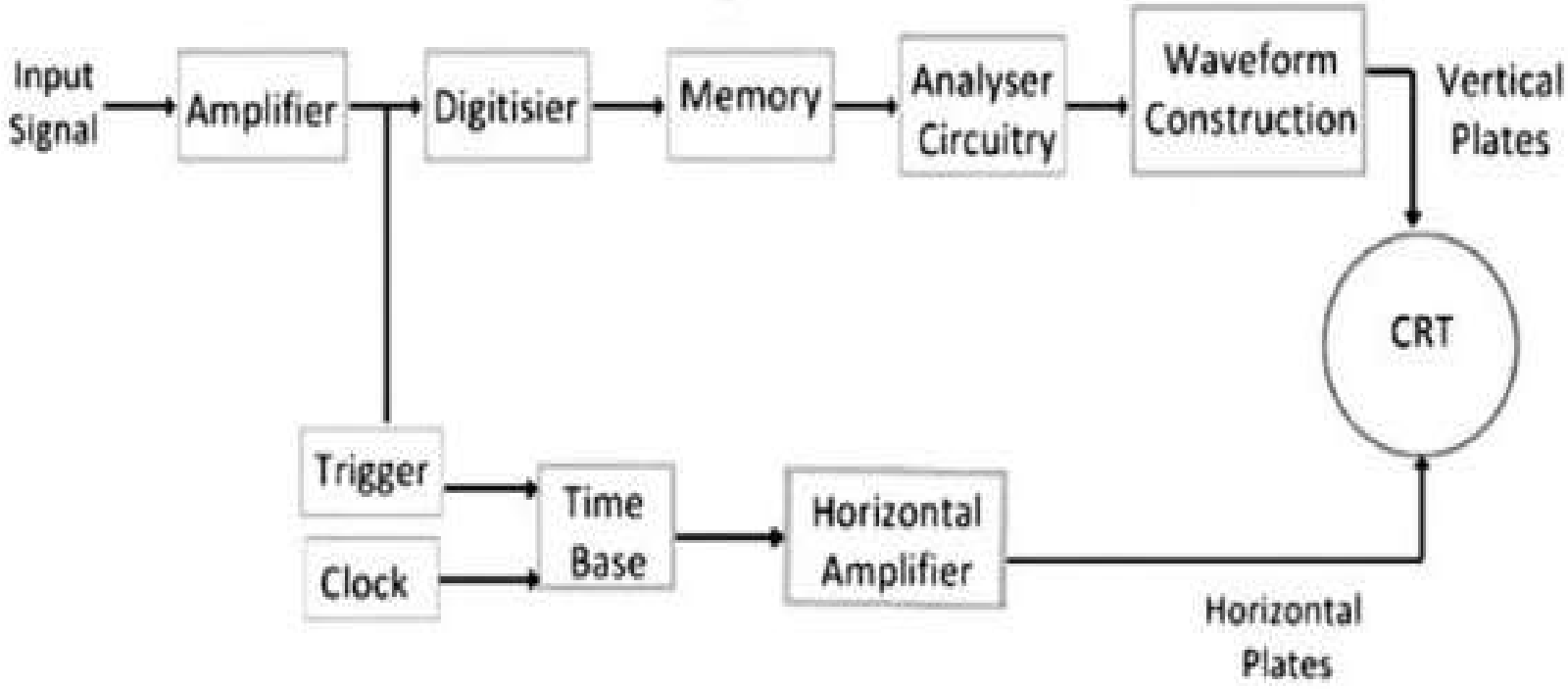

An electronic instrument that can display the changes in signal voltages graphically is known as an Oscilloscope. It is utilized to process, capture, display, analyze, store the waveform and bandwidth of the signals. The oscilloscopes are of two types based on the type of signal. These are classified into two types namely analog oscilloscope and digital oscilloscope.

The advanced features of the DSO are triggering, storage and measurement. It can display the waveform or signal both numerically and visually.

Digital Multimeter

A multimeter is a device used to measure two or more electrical quantities. A multimeter can be used to measure electrical functions such as voltage, current, resistance, continuity and some are able to measure electrical frequency.

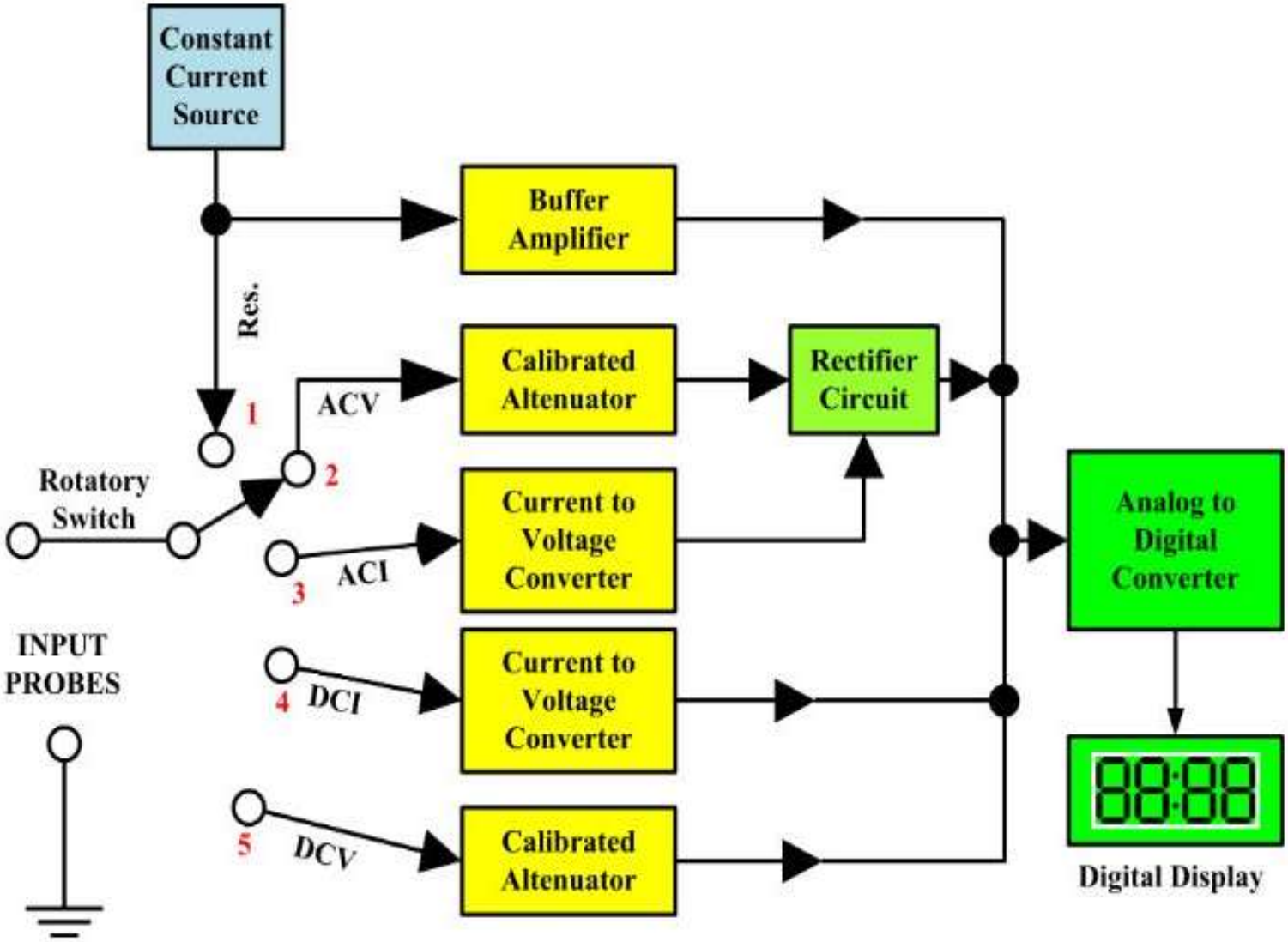
Constant Current Source
Buffer Amplifier
Res.
Calibrated Altenuator
Rectifier Circuit
ACV
1
2
Rotatory Switch
Current to Voltage Converter
Analog to Digital Converter
3
ACI
INPUT PROBES
4
DCI
Current to Voltage Converter
5
DCV
Calibrated Altenuator
Digital Display

Proximity Sensor

A **proximity sensor** is an electronic solid-state device used to indicate the presence of an object without making physical contact. The proximity sensor is a very useful device in hazardous areas such as oil refineries and not so hazardous areas such as car door detection systems.

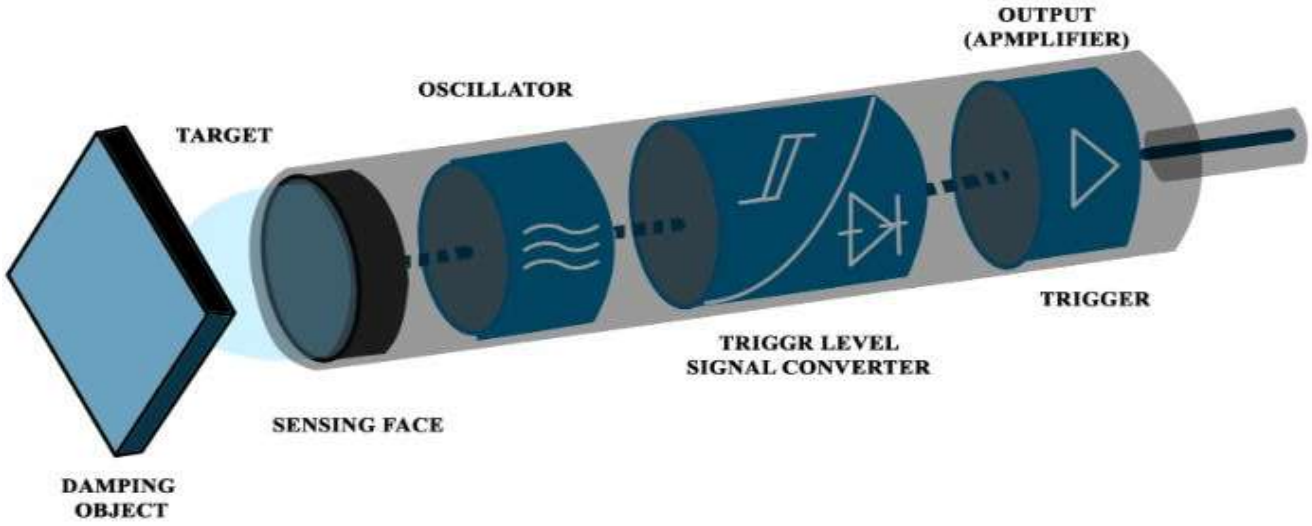

IR sensor

IR sensor is an electronic device, that emits the light in order to sense some object of the surroundings. An **IR sensor** can measure the heat of an object as well as detects the motion. Usually, in the **infrared spectrum**, all the objects radiate some form of thermal radiation. These types of radiations are invisible to our eyes, but infrared sensor can detect these radiations.

Pressure Sensor

A **pressure sensor** is defined as a transducer that converts an input mechanical **pressure** into an electrical output signal (pressure sensor definition). There are several types of pressure sensors based on size, capacity, measurement method, sensing technology and output requirements.

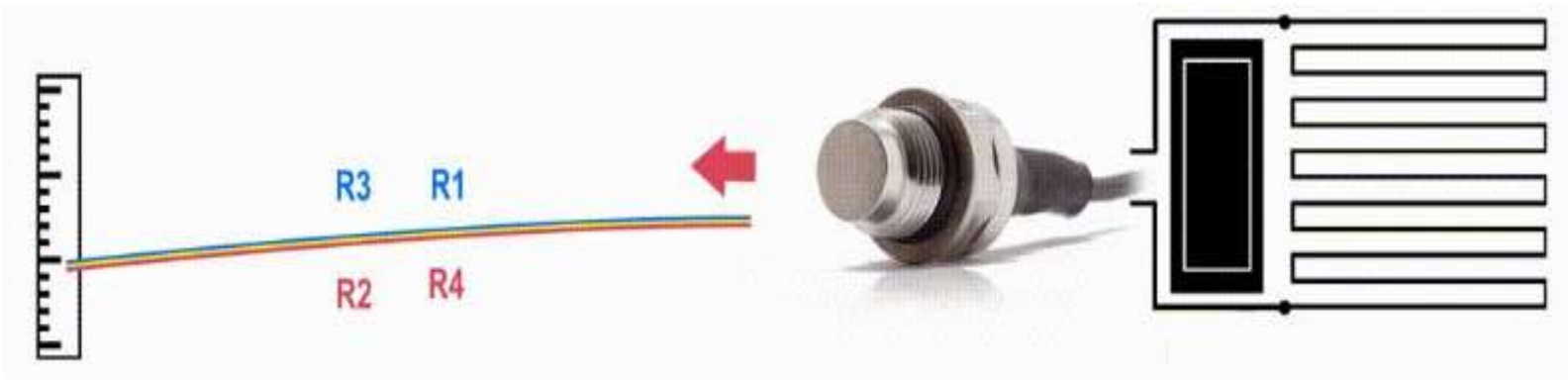

Bio sensor

A **biosensor** is an analytical device, used for the detection of a chemical substance, that combines a biological component with a physicochemical detector. The *sensitive biological element*, e.g. tissue, microorganisms, organelles, cell receptors, enzymes, antibodies, nucleic acids, etc

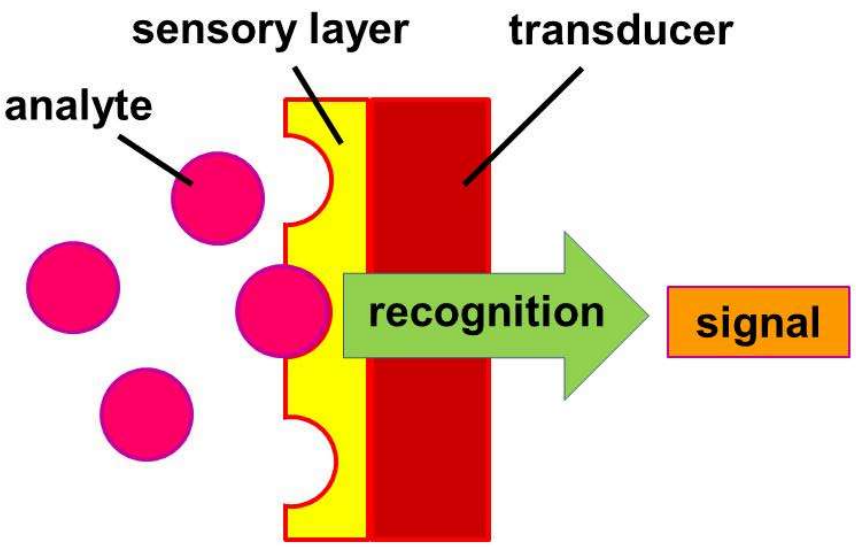

Smart building sensors

The world of smart building sensors can be a confusing one. There are lots of different options out there and there's a whole lot of information too – ranging from the very basic to the impossibly technical.

1. Temperature sensors
2. Humidity sensors
3. Motion / occupancy sensors
4. Contact sensors
5. Gas / air quality sensors
6. Electrical current monitoring sensors
7. Other types of sensor