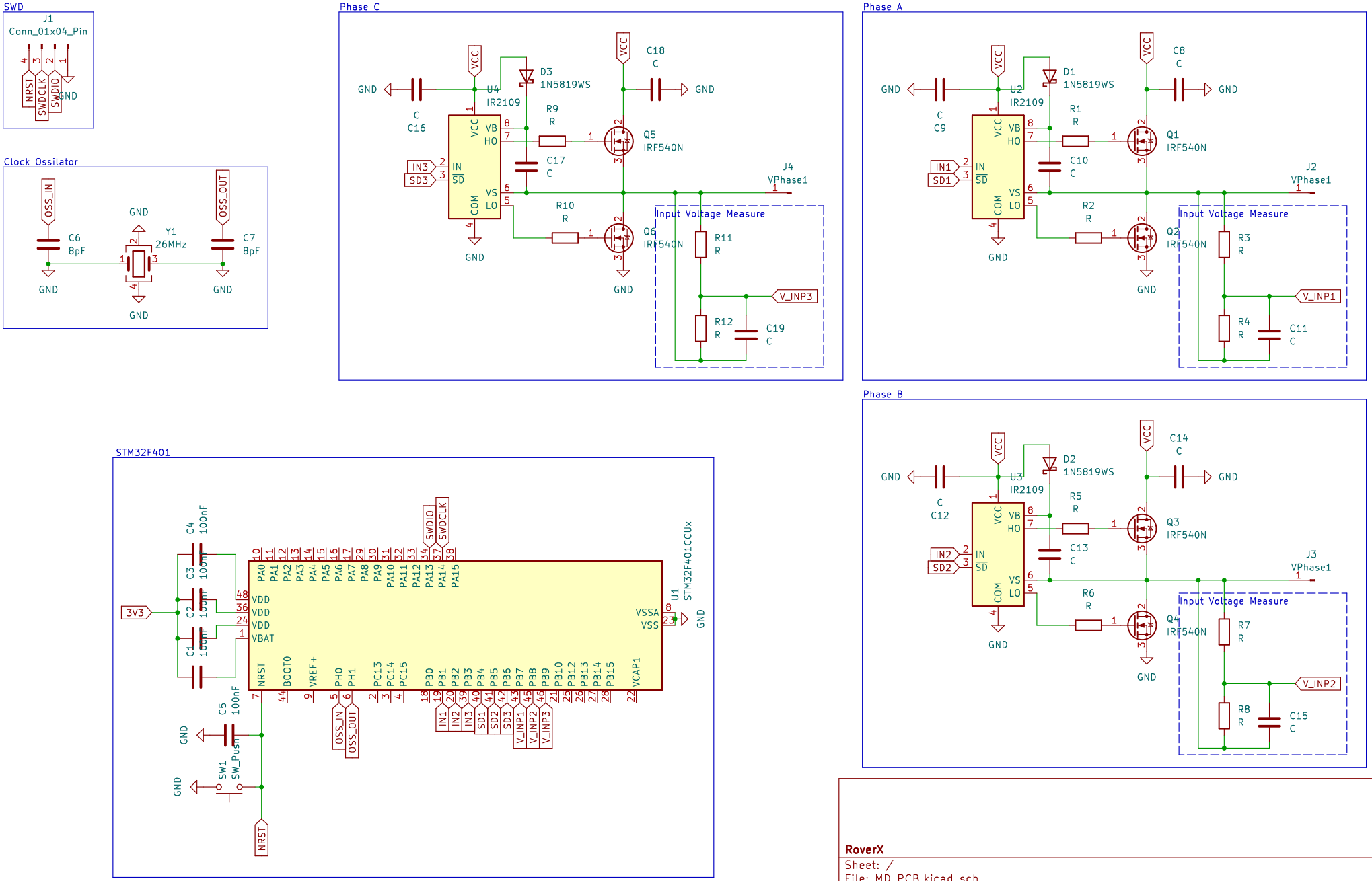

RoverX

Sheet: /

File: MD_PCB.kicad_sch

Title: ESC

Size: A4	Date: 2024-04-23	**Rev: 0.1**
KiCad E.D.A. kicad 7.0.10		Id: 1/1