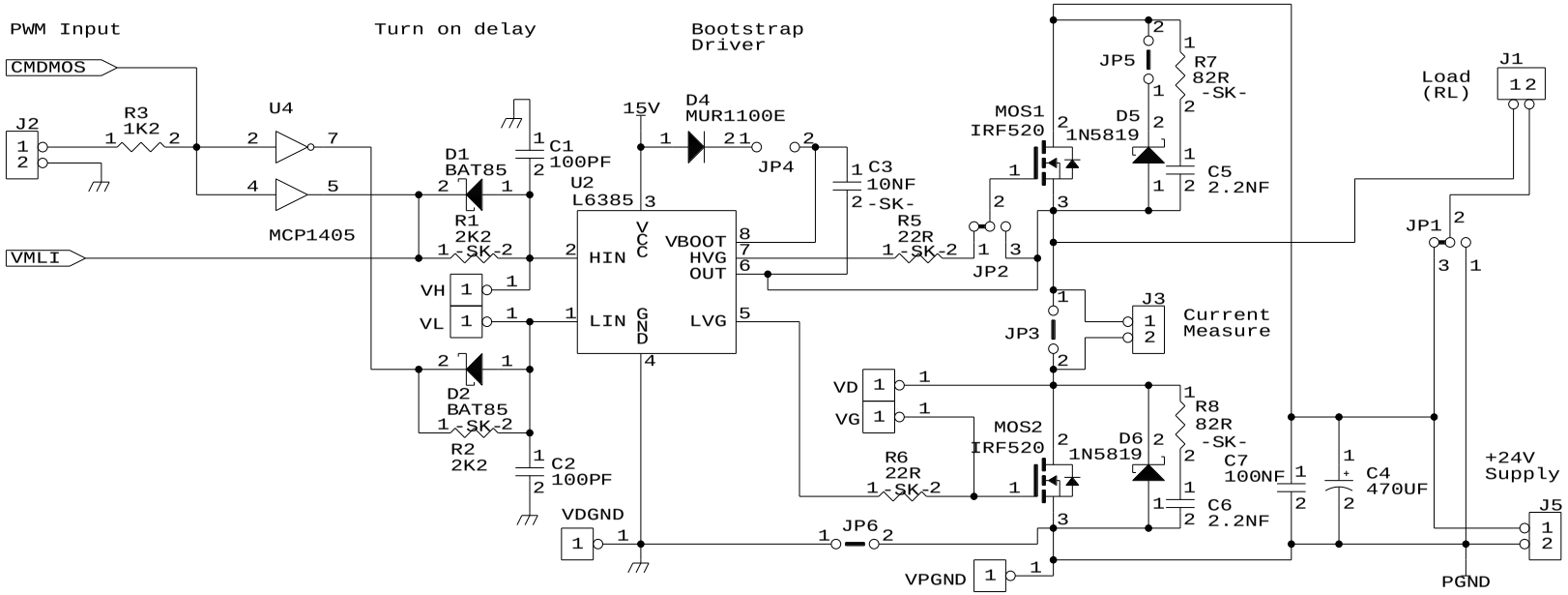

Notes :
- "-SK-" is for components mounted on socket
- wired loop is soldered on J3
- J2 is 5V logic input (protected to 20V)

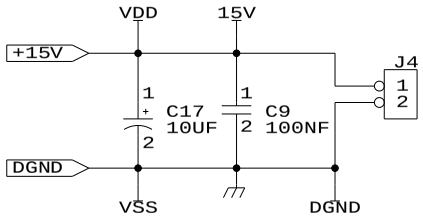

15V VDD Supply

UCL-Laboratoire d'electrotechnique
Place du Levant, 3
B-1348 Louvain-La-Neuve
BELGIUM

Title
DIDAMOS (Didactic Mos Drive)

Size	Document Number	REV
A4	use_print_number	1.3

Date: October 7, 2008 Sheet 2 of 3