IEEE P802.11bn™/D1.2, Nov 2025
(amendment to IEEE P802.11-REVmf™/D1.0,
as amended by IEEE P802.11bk™/D5.0,
IEEE P802.11bf™/D8.0,
and IEEE P802.11bi™/D3.0)

IEEE P802.11bn™/D1.2

Draft Standard for Information technology— Telecommunications and information exchange between systems Local and metropolitan area networks— Specific requirements

Part 11: Wireless LAN Medium Access Control (MAC) and Physical Layer (PHY) Specifications

Amendment 6: Enhancements for ultra-high reliability (UHR)

Prepared by the 802.11 Working Group of the

LAN/MAN Standards Committee
of the
IEEE Computer Society

Copyright © 2025 by the IEEE.
Three Park Avenue
New York, New York 10016-5997, USA
All rights reserved.

This document is an unapproved draft of a proposed IEEE Standard. As such, this document is subject to change. USE AT YOUR OWN RISK! Because this is an unapproved draft, this document must not be utilized for any conformance/compliance purposes. Permission is hereby granted for IEEE Standards Committee participants to reproduce this document for purposes of international standardization consideration. Prior to adoption of this document, in whole or in part, by another standards development organization permission must first be obtained from the IEEE Standards Activities Department (stds.ipr@ieee.org). Other entities seeking permission to reproduce this document, in whole or in part, must also obtain permission from the IEEE Standards Activities Department.

IEEE Standards Activities Department
445 Hoes Lane
Piscataway, NJ 08854, USA

Abstract: This amendment defines modifications to both the IEEE Std 802.11 physical layer (PHY) and the IEEE Std 802.11 medium access control (MAC). The amendment adds an ultra-high reliability capability to a wireless local area network (WLAN). The ultra-high reliability capability is defined for both an isolated Basic Service Set (BSS) and overlapping BSSs as:

- at least one mode of operation capable of increasing throughput by 25%, as measured at the MAC data service access point, in at least one signal to interference and noise ratio (SINR) level (rate-vs-range), compared to the extremely high throughput MAC/PHY operation, and
- at least one mode of operation capable of reducing latency by 25% for the 95th percentile of the latency distribution compared to the extremely high throughput MAC/PHY operation and
- at least one mode of operation capable of reducing MAC protocol data unit (MPDU) loss by 25% compared to the extremely high throughput MAC/PHY operation for a given scenario, especially for transitions between BSSs.

This amendment provides a mechanism to reduce power consumption for access points (APs) (including mobile APs) and improved peer-to-peer (P2P) operation compared to the extremely high throughput MAC/PHY operation.

This amendment applies to carrier frequency operation between 1 GHz and 7.250 GHz.

This amendment shall ensure backward compatibility and coexistence with legacy IEEE 802.11 devices in the 2.4 GHz, 5 GHz and 6 GHz unlicensed bands.

Keywords: UHR, ultra-high reliability, jitter, latency, MAC, medium access control, PHY, physical layer, wireless local area network, WLAN, signal to interference and noise ratio, SINR

Copyright © 2025 IEEE. All rights reserved.
This is an unapproved IEEE Standards Draft, subject to change.

Introduction

This introduction is not part of IEEE P802.11bn /D1.2, Nov 2025, IEEE Standard for Information technology—Telecommunications and information exchange between systems—Local and metropolitan area network—Specific requirements—Part 11: Wireless LAN Medium Access Control (MAC) and Physical Layer (PHY) Specifications—Amendment 6: Enhancements for ultra-high reliability(#4796) (UHR).

This amendment defines modifications to both the IEEE Std 802.11 physical layer (PHY) and the IEEE Std 802.11 medium access control (MAC). The amendment adds an ultra-high reliability capability to a wireless local area network (WLAN). The ultra-high reliability capability is defined for both an isolated Basic Service Set (BSS) and overlapping BSSs as:

- (#7558)at least one mode of operation capable of increasing throughput by 25%, as measured at the MAC data service access point, in at least one signal to interference and noise ratio (SINR) level (Rate-vs-Range), compared to the Extremely High Throughput MAC/PHY operation, and
- at least one mode of operation capable of reducing latency by 25% for the 95th percentile of the latency distribution compared to the Extremely High Throughput MAC/PHY operation and
- at least one mode of operation capable of reducing MAC Protocol Data Unit (MPDU) loss by 25% compared to the Extremely High Throughput MAC/PHY operation for a given scenario, especially for transitions between BSSs.

This amendment provides a mechanism to reduce power consumption for Access Points (APs) (including mobile APs) and improved Peer-to-Peer (P2P) operation compared to the Extremely High Throughput MAC/PHY operation.

This amendment applies to carrier frequency operation between 1 GHz and 7.250 GHz.

This amendment shall ensure backward compatibility and coexistence with legacy IEEE 802.11 devices in the 2.4 GHz, 5 GHz and 6 GHz unlicensed bands.

Laws and regulations

Users of these documents should consult all applicable laws and regulations. Compliance with the provisions of this standard does not imply compliance to any applicable regulatory requirements. Implementers of the standard are responsible for observing or referring to the applicable regulatory requirements. IEEE does not, by the publication of its standards, intend to urge action that is not in compliance with applicable laws, and these documents may not be construed as doing so.

Copyrights

This document is copyrighted by the IEEE. It is made available for a wide variety of both public and private uses. These include both use, by reference, in laws and regulations, and use in private self-regulation, standardization, and the promotion of engineering practices and methods. By making this document available for use and adoption by public authorities and private users, the IEEE does not waive any rights in copyright to this document.

Updating of IEEE documents

Users of IEEE standards should be aware that these documents may be superseded at any time by the issuance of new editions or may be amended from time to time through the issuance of amendments, corrigenda, or errata. An official IEEE document at any point in time consists of the current edition of the document together with any amendments, corrigenda, or errata then in effect. In order to determine whether a given document is the current edition and whether it has been amended through the issuance of amendments, corrigenda, or errata, visit the IEEE Standards Association website at https://standards.ieee.org/, or contact the IEEE at the address listed previously.

Copyright © 2025 IEEE. All rights reserved.
This is an unapproved IEEE Standards Draft, subject to change.

For more information about the IEEE Standards Association or the IEEE standards development process, visit the IEEE-SA website at http://standards.ieee.org.

Errata

Errata, if any, for this and all other standards can be accessed at the following URL: http://standards.ieee.org/findstds/errata/index.html. Users are encouraged to check this URL for errata periodically.

Patents

Attention is called to the possibility that implementation of this standard may require use of subject matter covered by patent rights. By publication of this standard, no position is taken by the IEEE with respect to the existence or validity of any patent rights in connection therewith. If a patent holder or patent applicant has filed a statement of assurance via an Accepted Letter of Assurance, then the statement is listed on the IEEE-SA Website at http://standards.ieee.org/about/sasb/patcom/patents.html. Letters of Assurance may indicate whether the Submitter is willing or unwilling to grant licenses under patent rights without compensation or under reasonable rates, with reasonable terms and conditions that are demonstrably free of any unfair discrimination to applicants desiring to obtain such licenses.

Essential Patent Claims may exist for which a Letter of Assurance has not been received. The IEEE is not responsible for identifying Essential Patent Claims for which a license may be required, for conducting inquiries into the legal validity or scope of Patents Claims, or determining whether any licensing terms or conditions provided in connection with submission of a Letter of Assurance, if any, or in any licensing agreements are reasonable or non-discriminatory. Users of this standard are expressly advised that determination of the validity of any patent rights, and the risk of infringement of such rights, is entirely their own responsibility. Further information may be obtained from the IEEE Standards Association.

Copyright © 2025 IEEE. All rights reserved.
This is an unapproved IEEE Standards Draft, subject to change.

Participants

At the time this revision was sent to sponsor ballot, the IEEE 802.11 Working Group had the following officers:

Robert Stacey, *Chair*
Jon W. Rosdahl, *1st Vice Chair*
Stephen McCann, *2nd Vice Chair*
Volker Jungnickel, *Secretary*

The officers and members of the Task Group be Working Group ballot pool are as follows:

Alfred Asterjadhi, *Chair*
Laurent Cariou, *Vice Chair*
Jianhan Liu, *Vice Chair*
Kiseon Ryu, *Vice Chair*
Yusuke Asai, *Secretary*
Ross Jian Yu, *Technical Editor*

Editor's Note: A 3-column list of working group voters at the time the working group first approved the draft will be inserted here.

Major contributions were received from the following individuals:

Editor's Note: A 3-column list of those who made major contributions will be inserted here.

The following members of the individual balloting committee voted on this revision. Balloters may have voted for approval, disapproval, or abstention.

Editor's Note: A 3-column list of sponsor ballot voters will be inserted here.

Editor's Note: The date of approval will be inserted on the following line.

When the IEEE-SA Standards Board approved this revision on <date>, it had the following membership:

Editor's Note: The officers of the IEEE-SA Standards board will be inserted here.

Editor's Note: A 3-column list of the IEEE-SA Standards board members will be inserted here.

Also included are the following nonvoting IEEE-SA Standards Board liaisons:

Editor's Note: The Standards Program Manager and Staff liaison will be inserted below.

<name>
IEEE Standards Program Manager, Document Development

<name>
IEEE Standards Program Managers, Technical Program Development

Copyright © 2025 IEEE. All rights reserved.
This is an unapproved IEEE Standards Draft, subject to change.

Contents

Contents 6

Figures 19

Tables 23

Editorial Notes 27

3. Definitions, acronyms, and abbreviations 29

3.2 Definitions specific to IEEE 802.11 29
3.4 Abbreviations and acronyms 33

4. General description 34

4.3 Components of the IEEE Std 802.11 architecture 34
4.3.5 Distribution system (DS) concepts 34
4.3.5.2 Extended service set (ESS): the large coverage network 34
4.3.17a(#Ed)Ultra-high reliability (UHR) STA 34
4.5 Overview of the services 34
4.5.3 Connectivity-related services 34
4.5.3.2 Mobility types 34
4.5.3.3 Association 35
4.5.4 Access control and data confidentiality services 35
4.5.4.2 Authentication 35

5. MAC service definition 37

5.2 MAC data service specification 37
5.2.4 MA-UNITDATA.request 37
5.2.4.2 Semantics of the service primitive 37

6. Layer management 38

6.3.7 Type 6 38
6.4 Table of MLME SAP interfaces 38
6.5 MLME SAP primitives 39
6.5.3 Scan 39
6.5.3.2 MLME-SCAN.request 39
6.5.3.2.2Semantics of the service primitive 39
6.5.3.3 MLME-SCAN.confirm 39
6.5.3.3.2Semantics of the service primitive 39
6.5.4 Synchronization 40
6.5.4.2 MLME-JOIN.request 40
6.5.4.2.2Semantics of the service primitive 40
6.5.7 Associate 40
6.5.7.2 MLME-ASSOCIATE.request(#7559) 40
6.5.7.2.2Semantics of the service primitive 40
6.5.7.3 MLME-ASSOCIATE.confirm 41
6.5.7.3.2Semantics of the service primitive 41
6.5.7.4 MLME-ASSOCIATE.indication 41
6.5.7.4.2Semantics of the service primitive 41

Copyright © 2025 IEEE. All rights reserved.
This is an unapproved IEEE Standards Draft, subject to change.

6.5.7.5 MLME-ASSOCIATE.response ... 42
6.5.7.5.2Semantics of the service primitive ... 42
6.5.8 Reassociate ... 42
6.5.8.2 MLME-REASSOCIATE.request ... 42
6.5.8.2.2Semantics of the service primitive ... 42
6.5.8.3 MLME-REASSOCIATE.confirm ... 43
6.5.8.3.2Semantics of the service primitive ... 43
6.5.8.4 MLME-REASSOCIATE.indication ... 43
6.5.8.4.2Semantics of the service primitive ... 43
6.5.8.5 MLME-REASSOCIATE.response ... 44
6.5.8.5.2Semantics of the service primitive ... 44
6.5.11 Start ... 44
6.5.11.2 MLME-START.request ... 44
6.5.11.2.2Semantics of the service primitive ... 44
6.5.33 L4S explicit congestion notification ... 45
6.5.33.1 Introduction ... 45
6.5.33.2 MLME-L4S-CONGESTION-EXPERIENCED.indication(#5899) ... 45
6.5.33.2.1Function ... 45
6.5.33.2.2Semantics of the service primitive ... 45
6.5.33.2.3When generated ... 46
6.5.33.2.4Effect of receipt ... 46

9. Frame formats ... 47

9.2 MAC frame formats ... 47
9.2.4.5 QoS Control field ... 47
9.2.4.5.1QoS Control field structure ... 47
9.2.4.5.17EOTSP subfield ... 47
9.2.4.6 HT Control field ... 48
9.2.4.6.4HE variant ... 48
9.2.4.7 Control subfield variants of an A-Control subfield ... 48
9.2.4.7.12MLPM Control ... 48
9.2.4.7.13EBSR Control ... 49
9.2.4.8 Frame Body field ... 50
9.2.4.8.1General ... 50
9.2.5 Duration/ID field (QoS STA) ... 51
9.2.5.2 Setting for single and multiple protection under enhanced distributed channel access (EDCA) 51
9.3 Format of individual frame types ... 51
9.3.1 Control frames ... 51
9.3.1.8 BlockAck frame format ... 51
9.3.1.8.1Overview ... 51
9.3.1.8.6Multi-STA BlockAck variant ... 52
9.3.1.19 NDP Announcement frame format ... 57
9.3.1.19.6UHR NDP Announcement frame format ... 59
9.3.1.22 Trigger frame format ... 61
9.3.1.22.1General ... 61
9.3.1.22.2Common Info field ... 63
9.3.1.22.3Special User Info field ... 70
9.3.1.22.4HE variant User Info field ... 73
9.3.1.22.5EHT variant User Info field ... 75
9.3.1.22.6UHR variant User Info field ... 75
9.3.1.22.7Feedback User Info field ... 84
9.3.1.22.8Intermediate FCS ... 86

Copyright © 2025 IEEE. All rights reserved.
This is an unapproved IEEE Standards Draft, subject to change.

9.3.1.22.9IFCS Location Indication field ... 87
9.3.1.22.10Basic Trigger frame format ... 87
9.3.1.22.11BFRP Trigger frame format ... 87
9.3.1.22.12MU-BAR Trigger frame format ... 87
9.3.1.22.13MU-RTS Trigger frame format ... 88
9.3.1.22.14BSRP Trigger frame format ... 88
9.3.1.22.15GCR MU-BAR Trigger frame format ... 89
9.3.1.22.16BQRP Trigger frame format ... 89
9.3.1.22.17NFRP Trigger frame format ... 89
9.3.1.22.18Ranging Trigger frame format ... 89
9.3.3 (PV0) Management frames ... 89
9.3.3.2 Beacon frame format ... 89
9.3.3.5 Association Request frame format ... 90
9.3.3.6 Association Response frame format ... 90
9.3.3.7 Reassociation Request frame format ... 91
9.3.3.8 Reassociation Response frame format ... 91
9.3.3.9 Probe Request frame format ... 91
9.3.3.10 Probe Response frame format ... 92
9.3.3.11 Authentication frame format ... 92
9.4 Management and Extension frame body components ... 93
9.4.1 Fields that are not elements ... 93
9.4.1.1 Authentication Algorithm Number field ... 93
9.4.1.4 Capability Information field ... 94
9.4.1.8 AID field ... 94
9.4.1.9 Status Code field ... 94
9.4.1.11 Action field ... 95
9.4.1.87 DPS Operation Parameters field(#Ed) ... 95
9.4.2 Elements ... 97
9.4.2.1 General ... 97
9.4.2.3 Supported Rates and BSS Membership Selectors element ... 98
9.4.2.5 TIM element ... 98
9.4.2.5.1General ... 98
9.4.2.19 Measurement Request element ... 99
9.4.2.19.7Beacon request ... 99
9.4.2.20 Measurement Report element ... 99
9.4.2.20.7Beacon report ... 99
9.4.2.23 RSNE ... 100
9.4.2.23.3AKM suites ... 100
9.4.2.25 Extended Capabilities element ... 100
9.4.2.35 Neighbor Report element ... 100
9.4.2.44 Multiple BSSID element ... 102
9.4.2.169 Reduced Neighbor Report element ... 102
9.4.2.169.2Neighbor AP Information field ... 102
9.4.2.176 FILS Request Parameters element ... 104
9.4.2.186 Wrapped Data element ... 104
9.4.2.198 TWT element ... 105
9.4.2.240 RSNXE ... 106
9.4.2.323 Multi-Link element ... 106
9.4.2.323.2Basic Multi-Link element ... 106
9.4.2.323.4Reconfiguration Multi-Link element ... 110
9.4.2.327 QoS Characteristics element ... 113
9.4.2.353 UHR Operation element ... 116
9.4.2.354 UHR Capabilities element ... 120
9.4.2.354.1General ... 120

Copyright © 2025 IEEE. All rights reserved.
This is an unapproved IEEE Standards Draft, subject to change.

9.4.2.354.2UHR MAC Capabilities Information field 121
9.4.2.354.3UHR PHY Capabilities Information field 127
9.4.2.355 MAPC element 129
9.4.2.355.1General 129
9.4.2.355.2MAPC Control field(#7779) 129
9.4.2.355.3MAPC Common Info field(#7780) 129
9.4.2.355.4MAPC Schemes Info field 131
9.4.2.356 SMD Information element 141
9.4.2.357 SMD BSS Transition Parameters element 142
9.4.2.358 Extended Channel Usage element 147
9.4.2.359 UHR Mode Change element 149
9.4.2.359.1General(#Ed) 149
9.4.2.359.2Mode Specific Parameters for DPS 151
9.4.2.359.3Mode Specific Parameters for NPCA 151
9.4.2.359.4Mode Specific Parameters for DUO 151
9.4.2.359.5Mode-specific parameters for DSO(#5237, 5698, 6699, 6700, 7713, 7724, 10577) 151
9.4.2.359.6Mode Specific Parameters for P-EDCA 152
9.4.2.359.7Mode Specific Parameters for ELR Reception 152
9.4.2.359.8Mode Specific Parameters for AOM 152
9.4.2.359.9Mode Specific Parameters for LLI 154
9.4.2.359.10Mode Specific Parameters for Co-BF 154
9.4.2.359.11Mode Specific Parameters for Co-SR 154
9.4.2.359.12Mode Specific Parameters for EMLSR 154
9.4.2.359.13Mode Specific Parameters for DBE 155
9.4.2.360 UHR Parameters Update element 155
9.4.2.360.1General(#Ed) 155
9.4.2.360.2Mode Specific Parameters for DPS 157
9.4.2.360.3Mode Specific Parameters for NPCA 157
9.4.2.360.4Mode Specific Parameters for DUO 157
9.4.2.360.5Mode Specific Parameters for P-EDCA 158
9.4.2.360.6Mode Specific Parameters for DBE 158
9.4.2.360.7Mode Specific Parameters for AP PUO 159
9.4.2.360.8Mode Specific Parameters for ELR Reception 159
9.4.2.361 Tx Power Indication Element 159
9.6 Action frame format details 160
9.6.7 Public Action frame details 160
9.6.7.1 Public Action field 160
9.6.7.17 TDLS Discovery Response frame format 160
9.6.7.36 FILS Discovery frame format 160
9.6.7.65 MAPC Discovery Request frame format(#Ed) 162
9.6.7.66 MAPC Discovery Response frame format 162
9.6.7.67 MAPC Authentication frame format 163
9.6.7.68 MAPC Negotiation Request frame format 163
9.6.7.69 MAPC Negotiation Response frame format 163
9.6.7.70 MAPC TXOP Return frame format 164
9.6.10 Protected Dual of Public Action frame details 164
9.6.12 TDLS Action field formats 165
9.6.12.2 TDLS Setup Request Action field format 165
9.6.12.3 TDLS Setup Response Action field format 165
9.6.12.4 TDLS Setup Confirm Action field format 166
9.6.15 Self-protected Action frame details(#7561) 166
9.6.15.2 Mesh Peering Open frame format 166
9.6.15.2.2Mesh Peering Open frame details 166

Copyright © 2025 IEEE. All rights reserved.
This is an unapproved IEEE Standards Draft, subject to change.

9.6.15.3 Mesh Peering Confirm frame format ... 166
9.6.15.3.2Mesh Peering Confirm frame details ... 166
9.6.43 Protected UHR Action frame details ... 167
9.6.43.1 Protected UHR Action field ... 167
9.6.43.2 UHR Link Reconfiguration Request frame format ... 167
9.6.43.3 UHR Link Reconfiguration Response frame format ... 169
9.6.43.4 UHR Link Reconfiguration Notify frame format ... 171
9.7 Aggregate MPDU (A-MPDU) ... 173
9.7.3 A-MPDU contents ... 175

10. MAC sublayer functional description ... 178

10.2 MAC architecture ... 178
10.2.1 General ... 178
10.6 Multirate support(#Ed) ... 178
10.6.10Modulation classes(#Ed) ... 178
10.6.11Non-HT basic rate calculation ... 184
10.8 HT Control field operation ... 185
10.12A-MPDU operation ... 186
10.12.6A-MPDU padding for VHT, HE, EHT, UHR or S1G PPDU ... 186
10.13PPDU duration constraint ... 186
10.23HCF ... 186
10.23.2.2 EDCA backoff procedure ... 186

11. MLME ... 188

11.1 Synchronization ... 188
11.1.4 Acquiring synchronization, scanning ... 188
11.1.4.3 Active scanning and probing procedures ... 188
11.1.4.3.2Active scanning procedure for a non-DMG STA ... 188
11.1.4.3.4Criteria for sending a response ... 188
11.10Radio measurement procedures ... 188
11.10.9.1 Beacon report ... 188
11.10.9.1.1General ... 188
11.49Reduced neighbor report ... 189

12. Security ... 190

12.2 Framework ... 190
12.2.4 RSNA establishment ... 190
12.6 RSNA security association management ... 190
12.6.1 Security associations ... 190
12.6.1.1 Security association definitions ... 190
12.6.1.1.1General ... 190
12.6.1.1.6PTKSA ... 190
12.17Multi-AP Coordination Preassociation Security Negotiation ... 191
12.17.1General ... 191
12.17.2Discovery of a(#9635, 7648) MAPC PASN capable AP ... 191
12.17.3Key establishment with MAPC PASN authentication ... 192
12.17.3.1 Overview ... 192
12.17.3.2 MAPC PASN Frame Construction and Processing ... 192
12.17.3.3 MAPC PASN authentication with SAE ... 192
12.17.3.4 PTKSA derivation with MAPC PASN authentication ... 192
12.17.3.5 MIC Computation with MAPC PASN authentication ... 192

Copyright © 2025 IEEE. All rights reserved.
This is an unapproved IEEE Standards Draft, subject to change.

12.17.3.5.1MIC computation for second MAPC PASN frame 192
12.17.3.5.2MIC computation for third MAPC PASN frame..... 193

35. Extremely high throughput (EHT) MAC specification 194

35.8 Restricted TWT (R-TWT)(#7562)..... 194
35.8.3 R-TWT announcement 194
35.8.3.1 Rules for R-TWT scheduling AP..... 194
35.8.3.2 Rules for R-TWT scheduled STA 194
35.17EHT SCS procedure..... 194

36. Extremely high throughput (EHT) PHY specification 195

36.3.11.4 Transmitted signal..... 195

37. Ultra-high reliability (UHR) MAC specification..... 196

37.1 Introduction..... 196
37.2 UHR channel access 196
37.2.1 Setting and resetting the NAV with BSRP Trigger frame..... 196
37.3 UHR spatial(#7563) reuse operation 196
37.4 UHR MU operation 197
37.4.1 UHR DL MU operation 197
37.4.1.1 General..... 197
37.4.1.2 RU allocation in a UHR MU PPDU 197
37.4.2 UHR UL MU operation 198
37.4.2.1 General..... 198
37.4.2.2 Rules for soliciting UL MU frames 198
37.4.2.2.1General..... 198
37.4.2.2.2Requirements for allocating resources..... 199
37.4.2.2.3Allowed settings of the Trigger frame fields and TRS Control sub-field 199
37.4.2.3 Non-AP STA behavior for UL MU operation 199
37.4.2.3.1General..... 199
37.4.2.3.2TXVECTOR parameters for UHR TB PPDU response to Trigger frame 200
37.4.2.3.3TXVECTOR parameters for UHR TB PPDU response to TRS Control subfield 200
37.4.2.3.4Conditions for not responding with a TB PPDU 200
37.5 Intra-BSS and inter-BSS PPDU classification for UHR STA 200
37.6 Prioritized EDCA (P-EDCA)(#6086)..... 200
37.7 UHR Acknowledgement Procedure..... 203
37.7.1 Overview..... 203
37.8 Rules for initial Control and initial Control response frames..... 204
37.8.1 General..... 204
37.8.2 BSRP Trigger frame soliciting a TB PPDU 205
37.8.3 BSRP NTB Trigger frame soliciting a non-HT (duplicate) PPDU 206
37.9 A-MPDU operation in a UHR PPDU..... 207
37.10UHR BSS operation..... 208
37.10.1Basic UHR BSS operation..... 208
37.10.2Enhanced long range (ELR) operation 208
37.11Enhanced Buffer status report operation 209
37.12Nominal packet padding values selection rules..... 210
37.13Rules related to the PHY interface of a UHR STA 210

Copyright © 2025 IEEE. All rights reserved.
This is an unapproved IEEE Standards Draft, subject to change.

37.13.1Setting TXVECTOR parameters for a UHR PPDU ... 210
37.13.1.1 STA_ID ... 210
37.13.1.2 POWER_BOOST_FACTOR ... 210
37.13.1.3 UPLINK_FLAG ... 211
37.13.1.4 BSS_COLOR ... 211
37.13.1.5 TXOP_DURATION ... 211
37.14UHR Co-BF sounding operation ... 211
37.14.1General ... 211
37.14.2UHR Co-BF sounding protocol ... 212
37.14.3Rules for UHR Co-BF sounding protocol sequences ... 212
37.14.4Rules for generating segmented feedback for Co-BF ... 216
37.14.5Sounding NDP transmission for UHR Co-BF sounding sequence ... 216
37.15Multi-AP coordination (MAPC) framework ... 217
37.15.1Common procedures for all multi-AP coordination schemes ... 217
37.15.1.1 General ... 217
37.15.1.2 MAPC discovery ... 217
37.15.1.3 MAPC agreement negotiation ... 218
37.15.1.3.1General ... 218
37.15.1.3.2MAPC agreement establishment ... 219
37.15.1.3.3MAPC agreement update ... 221
37.15.1.3.4MAPC agreement teardown ... 221
37.15.2Procedures for specific multi-AP coordination schemes ... 221
37.15.2.1 Coordinated beamforming (Co-BF) ... 221
37.15.2.1.1General ... 221
37.15.2.1.2Co-BF negotiation ... 222
37.15.2.1.3Co-BF transmission sequence(#10845) ... 223
37.15.2.1.4Co-BF transmission procedure ... 225
37.15.2.2 Coordinated spatial reuse (Co-SR) ... 227
37.15.2.2.1General ... 227
37.15.2.2.2Co-SR negotiation ... 228
37.15.2.2.3Frame Exchange sequence for Co-SR ... 228
37.15.2.2.4Co-SR transmission ... 228
37.15.2.3 Coordinated time division multiple access (Co-TDMA) ... 230
37.15.2.3.1General ... 230
37.15.2.3.2Co-TDMA negotiations ... 230
37.15.2.3.3Polling phase ... 231
37.15.2.3.4TXOP allocation phase ... 232
37.15.2.3.5TXOP return phase ... 233
37.15.2.4 Coordinated R-TWT (Co-RTWT) ... 234
37.15.2.4.1General ... 234
37.15.2.4.2Co-RTWT negotiations ... 234
37.15.2.4.3Co-RTWT announcement rules ... 235
37.15.2.4.4TXOP and backoff procedure rules for Co-RTWT ... 236
37.15.2.5 Coordinated channel recommendation (Co-CR) ... 237
37.15.2.5.1General ... 237
37.15.2.5.2Co-CR negotiations ... 237
37.16Seamless mobility domain (SMD) BSS transition(#9915) ... 238
37.16.1General ... 238
37.16.2SMD BSS transition discovery procedure ... 239
37.16.2.1 General ... 239
37.16.2.2 Obtaining received signal strength of the reported APs ... 240
37.16.3Association to the SMD-ME(#12354) ... 241
37.16.4Target AP MLD selection recommendation ... 241
37.16.5SMD BSS transition preparation procedure ... 242

Copyright © 2025 IEEE. All rights reserved.
This is an unapproved IEEE Standards Draft, subject to change.

37.16.5.1 General ... 242
37.16.5.2 Target links preparation ... 243
37.16.5.3 Per-SMD PTK key derivation ... 245
37.16.5.4 Per-AP MLD PTK key derivation ... 245
37.16.6SMD BSS transition execution procedure via the current AP MLD ... 246
37.16.7SMD BSS transition execution procedure via the target AP MLD ... 247
37.16.8Context ... 248
37.16.9Downlink draining period ... 249
37.16.10Downlink data(#7564) forwarding ... 250
37.17Power management ... 250
37.17.1Dynamic power save (DPS) operation ... 250
37.17.1.1 General ... 250
37.17.1.2 DPS operation for (#7565)non-AP STAs ... 251
37.17.2Mobile AP's DPS operation ... 253
37.17.3Multi-link power management ... 253
37.17.4Intra-PPDU power save for non-AP UHR STAs ... 253
37.18Non-primary channel access (NPCA) ... 254
37.18.1General ... 254
37.18.2MU EDCA interaction with NPCA ... 255
37.18.3Switching to the NPCA channel ... 256
37.18.4NPCA transmission rules ... 258
37.18.5Switching back from the NPCA channel ... 260
37.19Unavailability reporting and parameter updates ... 260
37.19.1General ... 260
37.19.2Dynamic (#7566)unavailability operation (DUO) mode ... 260
37.19.3Non-AP STA periodic unavailability operation (PUO) mode ... 263
37.19.4AP PUO mode ... 264
37.19.5Adaptive operation mode ... 265
37.20UHR TWT operation ... 267
37.20.1TWT SP early termination ... 267
37.21Enhanced multi-link single-radio (EMLSR) operation for a UHR non-AP MLD ... 267
37.22Use and requirements of initial Control frames ... 268
37.23Peer-to-peer (P2P) communications ... 269
37.23.1TXOP sharing for multiple P2P non-AP STAs ... 269
37.23.1.1 General ... 269
37.23.1.2 AP behavior ... 269
37.23.1.3 Non-AP STA behavior ... 270
37.23.1.4 SCS Procedure for TXSPG ... 271
37.24Low-latency indication (LLI) ... 271
37.24.1General ... 271
37.24.2Low-latency indication (LLI) mode ... 272
37.25UHR SCS procedure ... 273
37.26Dynamic subband operation (DSO)(#7567) ... 274
37.27Fairness considerations for TXOP sharing ... 278
37.28Dynamic bandwidth expansion (DBE) ... 279
37.29Beacon optimization (#7568) ... 281
37.30Support for L4S ... 281
37.30.1General ... 281
37.30.2AP operation ... 282
37.31Procedure for operating mode and parameter updates ... 282
37.32Enhanced BSS parameter critical update procedure(#12610) ... 285
37.32.1Enhanced critical update events ... 285
37.32.2Advance notification of updates to operation modes and parameters ... 285
37.32.2.1 Operations requiring advance notification ... 285

Copyright © 2025 IEEE. All rights reserved.
This is an unapproved IEEE Standards Draft, subject to change.

37.32.2.2 Procedure for advance notification ... 285
37.32.3 Indication of enhanced critical updates ... 287
37.33 Bounded and BTM-assured ESSs, and mobile APs ... 291

38. Ultra-high reliability (UHR) PHY specification ... 292

38.1 Introduction ... 292
38.1.1 Introduction to the UHR PHY ... 292
38.1.2 Scope ... 293
38.1.3 UHR PHY functions ... 293
38.1.3.1 General ... 293
38.1.3.2 PHY management entity (PLME) ... 294
38.1.3.3 Service specification method ... 294
38.1.4 PPDU formats ... 294
38.2 UHR PHY service interface ... 295
38.2.1 Introduction ... 295
38.2.2 TXVECTOR and RXVECTOR parameters ... 295
38.2.3 TRIGVECTOR parameters ... 309
38.2.4 PHY CONFIG_VECTOR ... 311
38.2.5 Effect of CH_BANDWIDTH parameter on PPDU format ... 312
38.2.6 Support for non-HT, HT, VHT, HE, and EHT formats ... 314
38.2.6.1 General ... 314
38.2.6.2 Support for non-HT format ... 319
38.2.6.3 Support for HT format ... 320
38.2.6.4 Support for VHT format ... 321
38.2.6.5 Support for HE format ... 322
38.2.6.6 Support for EHT format ... 322
38.3 UHR PHY ... 323
38.3.1 Introduction ... 323
38.3.2 Subcarrier and resource allocation ... 323
38.3.2.1 Tone plan for RUs and MRUs ... 323
38.3.2.2 Tone plan for DRUs ... 323
38.3.2.3 Null subcarriers ... 329
38.3.2.3.1 General ... 329
38.3.2.3.2 Null subcarriers for RRUs and MRUs ... 330
38.3.2.3.3 Null subcarriers for DRUs ... 330
38.3.2.4 RU and MRU restrictions for 20 MHz operation ... 333
38.3.3 MU-MIMO ... 333
38.3.3.1 Supported RU and MRU sizes in partial BW DL and UL MU-MIMO ... 333
38.3.4 Transmission of DRU ... 333
38.3.5 Interference mitigation ... 335
38.3.5.1 Supported coding for IM ... 335
38.3.5.2 IM (#7569)pilot subcarriers ... 336
38.3.6 LDPC encoding ... 336
38.3.6.1 General ... 336
38.3.6.2 Description of the LDPC codes of blocklength 3888 bits ... 337
38.3.7 UHR PPDU formats ... 339
38.3.8 Enhanced long range PPDU ... 341
38.3.9 Transmitter block diagram ... 341
38.3.10 Overview of the PPDU encoding process ... 349
38.3.10.1 General ... 349
38.3.10.2 Construction of L-STF ... 349
38.3.10.3 Construction of L-LTF ... 349
38.3.10.4 Construction of L-SIG ... 350

Copyright © 2025 IEEE. All rights reserved.
This is an unapproved IEEE Standards Draft, subject to change.

38.3.10.5 Construction of RL-SIG ... 350
38.3.10.6 Construction of U-SIG ... 351
38.3.10.7 Construction of UHR ELR-MARK ... 352
38.3.10.8 Construction of UHR-SIG ... 352
38.3.10.9 Construction of UHR-STF ... 353
38.3.10.10Construction of UHR-LTF ... 353
38.3.10.11Construction of ELR-SIG ... 354
38.3.10.12Construction of Data field in a UHR PPDU ... 354
38.3.10.12.1non-ELR PPDU(#7570) ... 354
38.3.10.12.2ELR PPDU ... 355
38.3.11UHR modulation and coding schemes (UHR-MCSs) and Unequal modulation (UEQM) 356
38.3.12UHR-SIG modulation and coding schemes (UHR-SIG-MCSs) ... 357
38.3.13Timing-related parameters ... 357
38.3.14Mathematical description of signals ... 362
38.3.14.1 Notation ... 362
38.3.14.2 Subcarrier indices in use ... 363
38.3.14.3 Channel frequencies ... 363
38.3.14.4 Transmitted signal ... 363
38.3.15UHR preamble ... 368
38.3.15.1 Introduction ... 368
38.3.15.2 Cyclic shift ... 369
38.3.15.2.1Cyclic shift for pre-UHR modulated fields ... 369
38.3.15.2.2Cyclic shift for UHR modulated fields ... 369
38.3.15.3 L-STF ... 370
38.3.15.4 L-LTF ... 371
38.3.15.5 L-SIG ... 371
38.3.15.6 RL-SIG ... 373
38.3.15.7 U-SIG ... 374
38.3.15.7.1General ... 374
38.3.15.7.2Content ... 374
38.3.15.7.3Encoding and modulation ... 387
38.3.15.8 ELR-MARK field(#9776) ... 388
38.3.15.8.1General ... 388
38.3.15.8.2ELR-MARK Matrix ... 389
38.3.15.8.3Encoding and Modulation ... 392
38.3.15.9 UHR-SIG ... 392
38.3.15.9.1General ... 392
38.3.15.9.2UHR-SIG content channels ... 393
38.3.15.9.3Common field for OFDMA transmission ... 394
38.3.15.9.4Common field for non-OFDMA transmission ... 402
38.3.15.9.5User Specific field ... 404
38.3.15.9.6Encoding and modulation ... 411
38.3.15.10UHR-STF ... 412
38.3.15.10.1UHR-STF for RRUs ... 412
38.3.15.10.2UHR-STF for DRUs ... 415
38.3.15.10.3CSD for DRU transmission ... 416
38.3.15.10.4CSD index assignment for DRU UHR-STF transmission ... 417
38.3.15.11UHR-LTF ... 418
38.3.15.11.1General ... 418
38.3.15.11.2UHR-LTF for DRUs ... 423
38.3.15.11.3UHR-LTF for ELR PPDU ... 425
38.3.15.12ELR-SIG ... 426
38.3.15.12.1General ... 426

Copyright © 2025 IEEE. All rights reserved.
This is an unapproved IEEE Standards Draft, subject to change.

38.3.15.12.2Content ... 427
38.3.15.12.3Encoding and modulation ... 428
38.3.15.13UHR preamble of preamble punctured UHR MU PPDU and UHR TB PPDU 430
38.3.16Data field ... 430
38.3.16.1 SERVICE field ... 430
38.3.16.2 Scrambler ... 430
38.3.16.3 Coding ... 430
38.3.16.3.1General ... 430
38.3.16.3.2BCC coding ... 430
38.3.16.3.3LDPC coding ... 430
38.3.16.3.4UHR PPDU padding process ... 431
38.3.16.3.5Encoding process for a UHR MU PPDU ... 431
38.3.16.3.6Encoding process for a UHR TB PPDU ... 432
38.3.16.3.7Encoding process for a UHR ELR PPDU ... 432
38.3.16.4 Stream parser ... 434
38.3.16.5 Segment parser ... 434
38.3.16.6 BCC interleavers ... 435
38.3.16.7 LDPC tone mapper ... 435
38.3.16.8 Segment deparser ... 435
38.3.16.9 Frequency domain duplication ... 436
38.3.16.10Pilot subcarriers ... 437
38.3.16.11OFDM modulation ... 439
38.3.17Packet extension ... 441
38.3.18Non-HT duplicate transmission ... 442
38.3.19Transmit requirements for PPDUs sent in response to a triggering frame ... 442
38.3.19.1 Introduction ... 442
38.3.19.2 Power pre-correction ... 443
38.3.19.3 Pre-correction accuracy requirements ... 444
38.3.19.3.1Pre-correction accuracy requirements for a(#8864) STA in response to a triggering PPDU 444
38.3.19.3.2Pre-correction accuracy requirements at a coordinated AP in response to a Co-BF triggering PPDU445
38.3.20Transmit requirements for a UHR ELR PPDU ... 445
38.3.20.1 Introduction ... 445
38.3.20.2 Pre-correction accuracy requirements ... 446
38.3.21Coordinated beamforming ... 446
38.3.21.1 Introduction ... 446
38.3.21.2 Beamforming Feedback Matrix V during UHR sounding operation ... 447
38.3.21.3 Supported RU sizes in Co-BF ... 448
38.3.21.4 Number of APs, STAs and spatial streams in a Co-BF PPDU ... 448
38.3.22Coordinated spatial reuse ... 448
38.3.22.1 General ... 448
38.3.22.2 Supported Co-SR modes and PPDU types ... 448
38.3.22.2.1Co-SR mode 1 ... 448
38.3.22.2.2Co-SR mode 2 ... 448
38.3.22.2.3Number of APs, STAs and spatial streams in Co-SR transmission. 449
38.3.23EHT sounding NDP for UHR Co-BF sounding sequence ... 449
38.3.24Transmit requirement for UHR Co-BF sounding sequence and Co-BF transmission 449
38.3.25UHR SU transmission(#Ed, 5358, 5359, 9233, 9398) ... 450
38.3.26Transmit specification(#8934, 11622) ... 450
38.3.26.1 Transmit spectral mask ... 450
38.3.26.1.1General ... 450

Copyright © 2025 IEEE. All rights reserved.
This is an unapproved IEEE Standards Draft, subject to change.

38.3.26.1.2Additional restrictions for puncturing in UHR PPDU 450
38.3.26.1.3Additional restrictions of preamble puncturing for non-HT duplicate PPDU 451
38.3.26.2 Spectral flatness 451
38.3.26.3 Transmit center frequency and symbol clock frequency tolerance 451
38.3.26.4 Modulation accuracy(#8146, #8416) 451
38.3.26.4.1Introduction to modulation accuracy tests 451
38.3.26.4.2Transmit center frequency leakage 451
38.3.26.4.3Transmitter constellation error 451
38.3.26.4.4Transmitter modulation accuracy (EVM) test 453
38.3.27Receiver specification 458
38.3.27.1 General 458
38.3.27.2 Receiver minimum input sensitivity 458
38.3.27.3 Adjacent channel rejection 459
38.3.27.4 Nonadjacent channel rejection 461
38.3.27.5 Receiver maximum input level 461
38.3.27.6 CCA sensitivity 461
38.3.27.6.1General 461
38.3.27.6.2CCA sensitivity for operating classes requiring CCA-ED 462
38.3.27.6.3CCA sensitivity for the primary 20 MHz channel 462
38.3.27.6.4Per 20 MHz CCA sensitivity 462
38.3.27.6.5Received channel power indicator (RCPI) measurement 462
38.3.28UHR transmit procedure 462
38.3.29UHR receive procedure 467
38.3.30Channel numbering and channelization 474
38.3.31Regulatory requirements 474
38.4 UHR PLME 474
38.4.1 PLME_SAP sublayer management primitives 474
38.4.2 PHY MIB 474
38.4.3 TXTIME and PSDU_LENGTH calculation 475
38.4.4 UHR PHY 477
38.5 Parameters for UHR-MCSs 477
38.5.1 UHR-MCSs for 26-tone RU 478
38.5.2 UHR-MCSs for 52-tone RU 479
38.5.3 UHR-MCSs for 52+26-tone MRU 480
38.5.4 UHR-MCSs for 106-tone RU 481
38.5.5 UHR-MCSs for 106+26-tone MRU 482
38.5.6 UHR-MCSs for 242-tone RU 483
38.5.7 UHR-MCSs for 484-tone RU 484
38.5.8 UHR-MCSs for 484+242-tone MRU 485
38.5.9 UHR-MCSs for 996-tone RU 486
38.5.10UHR-MCSs for 996+484-tone MRU 487
38.5.11UHR-MCSs for 996+484+242-tone MRU 488
38.5.12UHR-MCSs for 2×996-tone RU 489
38.5.13UHR-MCSs for 2×996+484-tone MRU 490
38.5.14UHR-MCSs for 3×996-tone MRU 491
38.5.15UHR-MCSs for 3×996+484-tone MRU 492
38.5.16UHR-MCSs for 4×996-tone RU 493
38.5.17UHR-MCSs for 242-tone RU with IM enabled 494
38.5.18UHR-MCSs for 484-tone RU with IM enabled 495
38.5.19UHR-MCSs for 996-tone RU with IM enabled 496
38.5.20UHR-MCSs for 2×996-tone RU with IM enabled 497
38.5.21UHR-MCSs for 4×996-tone RU with IM enabled 498
38.5.22UHR-MCSs for UHR ELR PPDU 499

Copyright © 2025 IEEE. All rights reserved.
This is an unapproved IEEE Standards Draft, subject to change.

38.6 Parameters for UHR-SIG MCSs 499

Annex B 500

B.4 PICS proforma—IEEE Std 802.11-<year> 500
B.4.3 IUT configuration 500
B.4.40a Ultra-high Reliability (UHR) features 500
B.4.40a.1UHR MAC features 500
B.4.40a.2UHR PHY features 500

Annex C 501

C.3 MIB Detail 501

Copyright © 2025 IEEE. All rights reserved.
This is an unapproved IEEE Standards Draft, subject to change.

Figures

Figure 6-7a—Example usage of the Type 6 form of MLME SAP primitives, to notify the MLMEs of a STA and peer STA of communications between the SMEs of the STAs 38
Figure 9-38b—Control Information field format in an(#8231) EBSR Control field 49
Figure 9-38a—Control Information subfield format of(#8226) an MLPM Control subfield 49
Figure 9-59—BA Control field format 51
Figure 9-66—Acknowledgment Per AID TID Info subfield format if the AID11 subfield is not 2045, 2009, or 2047 52
Figure 9-66a—Feedback Per AID TID Info subfield format 52
Figure 9-66b—Block Ack Starting Sequence Control subfield format if the AID11 subfield is not 2045 and if the Ack Type subfield is equal to 0 and the TID subfield is equal to 13(#Ed) 55
Figure 9-66c— Feedback field format if the Feedback Type field is set to 3 for Co-TDMA feedback(#Ed) .. 55
Figure 9-66d—Feedback subfield format if the Feedback Type subfield is set to 0 for unavailability information(#Ed) 56
Figure 9-66e—Feedback subfield format if the Feedback Type subfield is set to 1 for low-latency feedback(#Ed) 56
Figure 9-98a—First STA Info field format in a UHR NDP Announcement frame 59
Figure 9-98b—Second STA Info field format in a UHR NDP Announcement frame 60
Figure 9-103—HE variant Common Info field format 64
Figure 9-104a—UHR variant Common Info field format 65
Figure 9-104—EHT variant Common Info field format 65
Figure 9-105a—DRU/RRU Indication subfield format 70
Figure 9-108—Special User Info field format(#Ed) 71
Figure 9-114a—UHR variant User Info field format 75
Figure 9-114b—RRU SS Allocation subfield format of a UHR variant User Info field associated with an RRU 83
Figure 9-114c—DRU SS Allocation And DBW subfield format of a UHR variant User Info field associated with a DRU 83
Figure 9-114d—Feedback User Info field format 84
Figure 9-114e—Feedback Information field format if the Feedback Type is set to 0 85
Figure 9-114f—Feedback Information field format if the Feedback Type is set to 2 or 4 85
Figure 9-114h—Formats of User Info fields with AID12 subfield equal to 2011 86
Figure 9-114g—Feedback Information field if the Feedback Type field is set to 3 86
Figure 9-114i—Formats of User Info field with AID12 subfield equal to 2012 87
Figure 9-120a—UHR variant User Info field format in the MU-RTS Trigger frame 88
Figure 9-162—Capability Information field format (non-DMG STA) 94
Figure 9-207u—DPS Operation Parameters field format 96
Figure 9-243a— Critical Updates Indicator field format 98
Figure 9-445—BSSID Information field format 101
Figure 9-777—TBTT Information field format 103
Figure 9-780a—Enhanced Critical Updates Information field format 103
Figure 9-778—BSS Parameters subfield format 104
Figure 9-837—Broadcast TWT Parameter Set field format 105
Figure 9-1142—Presence Bitmap subfield of the Basic Multi-Link element format 106
Figure 9-1143—Common Info field of the Basic Multi-Link element format 107
Figure 9-1147—Extended MLD Capabilities And Operations subfield format 108
Figure 9-1150—STA Info field format of the Basic Multi-Link element 109
Figure 9-1149—STA Control field format of the Basic Multi-Link element 109
Figure 9-1156—Presence Bitmap subfield format of the Reconfiguration Multi-Link element 110
Figure 9-1157—Common Info field format of the Reconfiguration Multi-Link element 111
Figure 9-1159—STA Control field format for the Reconfiguration Multi-Link element 112
Figure 9-1160—STA Info field format for the Reconfiguration Multi-Link element 112

Copyright © 2025 IEEE. All rights reserved.
This is an unapproved IEEE Standards Draft, subject to change.

Figure 9-1160b—DSO Confirmation field format ... 113
Figure 9-1160a—Offered 80 MHz DSO Subband field format ... 113
Figure 9-1183—Control Info field format ... 114
Figure 9-1182—QoS Characteristics element format ... 114
Figure 9-1184a—P2P Group Information field format ... 116
Figure 9-aa1—UHR Operation element format ... 116
Figure 9-aa2—UHR Operation Parameters field format(#8446, 12508) ... 117
Figure 9-aa3—NPCA Operation Parameters field format ... 117
Figure 9-aa4—P-EDCA Operation Parameters field format ... 119
Figure 9-aa5—DBE Operation Parameters field format(#10589, #12511) ... 120
Figure 9-aa6—UHR Capabilities element format ... 121
Figure 9-aa7—UHR MAC Capabilities Information field format ... 122
Figure 9-aa8—DBE Capability Parameters field format ... 126
Figure 9-aa9—UHR PHY Capabilities Information field format ... 127
Figure 9-aa10—MAPC element format ... 129
Figure 9-aa11—MAPC Control field format ... 129
Figure 9-aa12—MAPC Common Info field format ... 129
Figure 9-aa13—MAPC Capabilities field format ... 130
Figure 9-aa14—MAPC Parameters field format ... 131
Figure 9-aa15—Per-Scheme Profile subelement format ... 132
Figure 9-aa16—MAPC Scheme Control field format ... 132
Figure 9-aa17—MAPC Scheme Request field format ... 133
Figure 9-aa18—MAPC Request Control field format ... 134
Figure 9-aa19—Security Profile subelement format ... 135
Figure 9-aa20—MAPC Scheme Parameter Set field of the Co-BF profile format ... 135
Figure 9-aa21—MAPC Scheme Parameter Set field of the Co-SR profile format ... 136
Figure 9-aa22—MAPC Scheme Parameter Set field format for Co-TDMA negotiations ... 136
Figure 9-aa23—Co-TDMA Capabilities field format ... 137
Figure 9-aa24—Bandwidth Control field format ... 137
Figure 9-aa25—BW Info Header field format ... 137
Figure 9-aa26—BSS Color Information field format ... 138
Figure 9-aa27—MAPC Per-Scheme Info field of the Co-RTWT profile format ... 138
Figure 9-aa28— Co-RTWT Parameter Set field format ... 139
Figure 9-aa29—Service Period Info field format ... 139
Figure 9-aa30— MAPC Per Scheme Info field of the Co-CR profile format ... 140
Figure 9-aa31—Co-CR Parameter Set field format ... 140
Figure 9-aa32—Control field format of the Co-CR Parameter Set field ... 140
Figure 9-aa33—Recommendation Periods Info field format ... 141
Figure 9-aa34—SMD Information element format ... 141
Figure 9-aa35—SMD Capabilities field format ... 142
Figure 9-aa36— SMD BSS Transition Parameters element format ... 142
Figure 9-aa37—ST Info field format in an ST preparation request ... 142
Figure 9-aa38—Common Info field format in an ST preparation request ... 143
Figure 9-aa39—Presence Bitmap field format in an ST preparation request ... 143
Figure 9-aa40—SCS List field format ... 143
Figure 9-aa41—SCS ID field format ... 143
Figure 9-aa42—ST Info field format in an ST preparation response ... 144
Figure 9-aa43—Presence Bitmap field format in an ST preparation response ... 144
Figure 9-aa44—DL BA Info field format ... 144
Figure 9-aa45—Extended BA Parameters Info field format ... 145
Figure 9-aa46—UL BA Info field format ... 145
Figure 9-aa47— ST Info field format in an ST execution request ... 146
Figure 9-aa48—Presence Bitmap field of the ST Info field format in an ST execution request ... 146
Figure 9-aa49— ST Info field format in an ST execution response ... 146

Copyright © 2025 IEEE. All rights reserved.
This is an unapproved IEEE Standards Draft, subject to change.

Figure 9-aa50—Presence Bitmap field format of the ST Info field in an ST execution response(#5427).. 147
Figure 9-aa51—Latest UL SN field format ... 147
Figure 9-aa52—Extended Channel Usage element format ... 147
Figure 9-aa53—Channel Usage Parameter Set field format ... 148
Figure 9-aa54—Presence Indicator field ... 148
Figure 9-aa55—Recommendation Periods Information field format ... 149
Figure 9-aa56— UHR Mode Change element format ... 149
Figure 9-aa57—Mode Tuple field format ... 150
Figure 9-aa58—Mode Specific Parameters field for NPCA ... 151
Figure 9-aa59—Mode Specific Parameters field for DSO ... 152
Figure 9-aa60—Mode Specific Parameters field for AOM ... 153
Figure 9-aa61—Mode Specific Parameters field for EMLSR ... 155
Figure 9-aa62— UHR Parameters Update element format ... 155
Figure 9-aa63— Mode Tuple field format ... 156
Figure 9-aa64— Mode Specific Parameters field for NPCA format ... 157
Figure 9-aa65— Mode Specific Parameters field for DUO format ... 158
Figure 9-aa66—Mode Specific Parameters field for P-EDCA format ... 158
Figure 9-aa67—Mode Specific Parameters field for DBE format(#10589, #12511) ... 158
Figure 9-aa68—Tx Power Indication element format ... 159
Figure 9-aa69—AP Conducted Tx Power field format ... 159
Figure 9-aa70—MAPC Discovery Request frame format ... 162
Figure 9-aa71—MAPC Discovery Response frame format ... 162
Figure 9-aa72—MAPC Authentication frame format ... 163
Figure 9-aa73—MAPC Negotiation Request frame format ... 163
Figure 9-aa74—MAPC Negotiation Response frame format ... 164
Figure 9-aa75—MAPC TXOP Return frame Action field format ... 164
Figure 9-aa76 —Type field format ... 168
Figure 9-aa77 —DL Data Drain Info field format ... 172
Figure 9-aa78—All-TIDs Info field format ... 172
Figure 9-aa79—Per-TID Info field format ... 173
Figure 10-1—STA MAC architecture (Non-DMG non-CMMG non-S1G) ... 178
Figure 37-1—UHR Co-BF sequential NDP sounding sequence initiated by AP1 ... 213
Figure 37-2—UHR Co-BF sequential NDP sounding sequence initiated by AP2 ... 214
Figure 37-3—UHR Co-BF joint NDP sounding sequence initiated by AP1 ... 214
Figure 37-4—UHR Co-BF joint NDP sounding sequence initiated by AP2 ... 215
Figure 37-5—An example(#10938) of the Co-TDMA procedure between three APs ... 230
Figure 37-6—Candidate selection for target AP MLDs ... 241
Figure 37-7—SMD BSS transition preparation and execution procedures ... 242
Figure 37-8—Enhanced Critical Updates Mechanism(#4007, 11426, 12620) ... 290
Figure 38-1—PHY interaction on transmit for various PPDU formats ... 316
Figure 38-2—PHY interaction on receive for various PPDU formats ... 317
Figure 38-3—PHY-CONFIG and CCA interaction with various PPDU formats ... 318
Figure 38-4—UHR MU PPDU format ... 339
Figure 38-5—UHR TB PPDU format ... 339
Figure 38-6—UHR ELR PPDU format ... 340
Figure 38-7—Transmitter block diagram for the L-SIG, RL-SIG, and U-SIG fields for a UHR MU PPDU... 342
Figure 38-8—Transmitter block diagram for the L-SIG, RL-SIG, and U-SIG fields of a UHR TB PPDU 343
Figure 38-9—Transmitter block diagram for the UHR-SIG fields of a UHR MU PPDU ... 343
Figure 38-10—Transmitter block diagram for the UHR ELR-SIG field of a UHR ELR PPDU ... 344
Figure 38-11—Transmitter block diagram for the UL transmission or DL non-MU-MIMO transmission of a Data field with BCC encoding on an RU or MRU size equal to or smaller than a 242-tone RU ... 344
Figure 38-12—Transmitter block diagram for the UL transmission or DL non-MU-MIMO transmission of a Data field with LDPC encoding on an RU or MRU size equal to or smaller than a 996-tone RU ... 345

Copyright © 2025 IEEE. All rights reserved.
This is an unapproved IEEE Standards Draft, subject to change.

Figure 38-13—Transmitter block diagram for the DL MU-MIMO transmission of a Data field with LDPC encoding on an RU or MRU equal to or smaller than a 996-tone RU 346
Figure 38-14—Transmitter block diagram for the Data field of a UHR SU transmission with LDPC encoding on RU or MRU size larger than a 996-tone RU 347
Figure 38-15—Transmitter block diagram for the UL transmission using UHR MU PPDU or DL non-MU-MIMO transmission of a Data field with LDPC encoding on an RU or MRU larger than a 996-tone RU 347
Figure 38-16—Transmitter block diagram for the Data field of a UHR ELR PPDU transmission with BCC encoding 348
Figure 38-17—Transmitter block diagram for the Data field of a UHR ELR PPDU transmission with LDPC encoding 348
Figure 38-18—Timing boundaries for UHR MU PPDU and UHR TB PPDU fields 363
Figure 38-19—Timing boundaries for UHR ELR PPDU fields 364
Figure 38-20—The 32 x 48 ELR-MARK(#6242) sequence matrix Ḣ 391
Figure 38-21—Graphical view of the complete 64x96 matrix Ḧ corresponding to the ELR-MARK(#6245) symbols 391
Figure 38-22—Generation of 1× UHR-LTF symbols 422
Figure 38-23—Generation of 2× UHR-LTF symbols 422
Figure 38-24—RRU52 4x DUP 436
Figure 38-25—EHT sounding NDP format for UHR Co-BF sounding sequences 449
Figure 38-26—PHY transmit procedure for a UHR MU PPDU 463
Figure 38-27—PHY transmit procedure for a UHR TB PPDU 463
Figure 38-28—PHY transmit procedure for a UHR ELR PPDU 464
Figure 38-29—PHY transmit state machine for a UHR PPDU 466
Figure 38-30—PHY receive procedure for a UHR MU PPDU 467
Figure 38-31—PHY receive procedure for a UHR TB PPDU 467
Figure 38-32—PHY receive procedure for a UHR ELR PPDU 468
Figure 38-33—PHY receive state machine for a UHR PPDU 469

Copyright © 2025 IEEE. All rights reserved.
This is an unapproved IEEE Standards Draft, subject to change.

Tables

Table 1—Draft Status ... 28
Table 5-2a—ECN field definition ([RFC 9331]) ... 37
Table 6-1—MLME SAP interface ... 38
Table 9-10—QoS(#5900) Control field ... 47
Table 9-25—Control ID subfield values ... 48
Table 9-38—Maximum data unit sizes and durations ... 50
Table 9-43—Context of the Per AID TID Info subfield and presence of optional subfields if the AID11 subfield is not 2045 ... 53
Table 9-44—Fragment Number subfield encoding for the Multi-STA BlockAck variant ... 54
Table 9-44a—Feedback Type subfield encoding(#Ed, 5880) ... 55
Table 9-47—Encoding of the AID11 subfield in an NDP Announcement frame ... 57
Table 9-48—NDP Announcement frame variant encoding ... 59
Table 9-53—Valid combinations of B54 and B55 in the Common Info field, PHY Version Identifier field in the Special User Info field, B39 in the User Info field, and solicited TB PPDU format(Ed) ... 63
Table 9-56a—GI And UHR-LTF Type subfield encoding ... 67
Table 9-58—Pre-FEC Padding Factor and PE Disambiguity subfields ... 68
Table 9-59—UL Bandwidth Extension subfield encoding(#Ed) ... 72
Table 9-60—Mapping from Special User Info field to U-SIG field in the EHT or UHR TB PPDU(#11563). 73
Table 9-61—AID12 subfield encoding ... 73
Table 9-65a—Encoding of the PS160 and RU Allocation subfields in a UHR variant User Info field for DBW 20 MHz ... 79
Table 9-65b—Encoding of the PS160 and RU Allocation subfields in a UHR variant User Info field for DBW 40 MHz ... 80
Table 9-65c—Encoding of the PS160 and RU Allocation subfields in a UHR variant User Info field for DBW 60 MHz ... 81
Table 9-65d—Encoding of the PS160 and RU Allocation subfields in a UHR variant User Info field for DBW 80 MHz ... 82
Table 9-65e—Feedback Type subfield encoding ... 84
Table 9-66—TXS Mode subfield encoding ... 88
Table 9-76—Association Request frame body ... 90
Table 9-77—Association Response frame body ... 90
Table 9-74—Beacon frame body ... 90
Table 9-78—Reassociation Request frame body ... 91
Table 9-79—Reassociation Response frame body ... 91
Table 9-80—Probe Request frame body ... 91
Table 9-81—Probe Response frame body ... 92
Table 9-83—Presence of fields and elements in Authentication frames ... 92
Table 9-93—Category values ... 95
Table 9-92—Status codes ... 95
Table 9-129u—LC Mode Bandwidth field encoding ... 97
Table 9-148—Element IDs ... 97
Table 9-149—BSS membership selector value encoding ... 98
Table 9-149a—Encoding of Critical Update Type field ... 99
Table 9-159—Measurement Mode definitions for Beacon request ... 99
Table 9-208—AKM suite selectors ... 100
Table 9-210—Extended Capabilities field ... 100
Table 9-230—Optional subelement IDs for Neighbor Report ... 101
Table 9-347—TBTT Information field contents if the TBTT Information Field Type subfield is equal to 0 .. 103
Table 9-356—PHY Support Criterion subfield ... 104
Table 9-369—Restricted TWT Schedule Info subfield values ... 105

Copyright © 2025 IEEE. All rights reserved.
This is an unapproved IEEE Standards Draft, subject to change.

Table 9-393—Extended RSN Capabilities field ... 106
Table 9-453—Subfields of the Extended MLD Capabilities And Operations subfield ... 108
Table 9-454—Reconfiguration Operation Type subfield encoding ... 111
Table 9-bb1—Encoding of the NPCA Minimum Duration Threshold field ... 118
Table 9-bb2—Encoding of the DBE Bandwidth field ... 120
Table 9-bb3—Fields of the UHR MAC Capabilities Information field ... 122
Table 9-bb4—Encoding of the UHR Operating Mode And Parameters Update Timeout field ... 125
Table 9-bb5—Encoding of the DBE Maximum Supported Bandwidth field ... 126
Table 9-bb6—Subfields of the UHR PHY Capabilities Information field ... 128
Table 9-bb7—Optional subelement IDs of the MAPC Scheme Info field ... 132
Table 9-bb8—MAPC Scheme Type field values ... 133
Table 9-bb9—MAPC Operation Type field values ... 134
Table 9-bb10—Channel Width and CCFS fields ... 137
Table 9-bb11—Usage Mode field encoding ... 148
Table 9-bb12—Encoding of the Mode ID field ... 150
Table 9-bb13— Encoding of the Mode ID field ... 156
Table 9-516—Public Action field values ... 160
Table 9-527—TDLS Discovery Response Action field format ... 160
Table 9-539—PHY Index subfield ... 161
Table 9-540—FILS Minimum Rate ... 161
Table 9-537—BSS Operating Channel Width ... 161
Table 9-570—Information for TDLS Setup Request Action field ... 165
Table 9-571—Information for TDLS Setup Response Action field ... 165
Table 9-561—Public Action field values defined for Protected Dual of Public Action frames ... 165
Table 9-572—Information for TDLS Setup Confirm Action field ... 166
Table 9-595—Mesh Peering Open frame Action field format ... 166
Table 9-658ba—Protected UHR Action field values ... 167
Table 9-596—Mesh Peering Confirm frame Action field format ... 167
Table 9-658bc—Type field encoding ... 168
Table 9-658bb—UHR Link Reconfiguration Request frame Action field format ... 168
Table 9-658bd—UHR Link Reconfiguration Response frame Action field format ... 169
Table 9-658be—Type field encoding ... 170
Table 9-658bf—UHR Link Reconfiguration Notify frame Action field format ... 171
Table 9-658bg—Type field encoding ... 172
Table 9-724—MPDU delimiter fields ... 174
Table 9-725—A-MPDU contexts ... 176
Table 9-728—A-MPDU contents in the control response context ... 177
Table 10-9—Modulation classes ... 179
Table 10-10—Non-HT reference rate ... 185
Table 10-12—Conditions for including Control subfield variants ... 186
Table 37-1—Default P-EDCA parameter set ... 202
Table 38-1—TXVECTOR and RXVECTOR parameters ... 296
Table 38-2—TRIGVECTOR parameters ... 310
Table 38-3—Interpretation of FORMAT, NON_HT_MODULATION, and CH_BANDWIDTH parameters 312
Table 38-4—Mapping of the UHR PHY parameters for non-HT operation ... 320
Table 38-5—Maximum number of DRUs for each DBW in an 80 MHz subblock ... 323
Table 38-6—Data and pilot subcarrier indices for distributed RUs (DRU) in a 20 MHz UHR TB PPDU 325
Table 38-7—Data and pilot subcarrier indices for distributed RUs (DRU) in a 40 MHz UHR TB PPDU 325
Table 38-8—Data and pilot subcarrier indices for distributed RUs (DRU) in a 60 MHz UHR TB PPDU 326
Table 38-9—Data and pilot subcarrier indices for distributed RUs (DRU) in an 80 MHz UHR TB PPDU with 80 MHz DBW ... 327
Table 38-10—Constant shift value Kshift for DRU on a frequency subblock of wide bandwidth ... 328
Table 38-11—DC and Guard Subcarrier allocation related constants for UHR TB PPDU with DRUs ... 329

Copyright © 2025 IEEE. All rights reserved.
This is an unapproved IEEE Standards Draft, subject to change.

Table 38-12—Null subcarrier indices for DRUs of 20 MHz and 40 MHz UHR TB PPDU 330
Table 38-13—Null subcarrier indices for DRUs of 80 MHz UHR TB PPDU 331
Table 38-14— DBW modes allowed in an 80 MHz frequency subblock for an 80 MHz, 160 MHz, or 320 MHz UHR TB PPDU 335
Table 38-15—PPDU encoding parameters 336
Table 38-16—Exponent Matrix and Parity Matrix Size 337
Table 38-17—UHR PPDU fields 340
Table 38-18—Timing-related constants 357
Table 38-19—Subcarrier allocation related constants for the UHR ELR PPDU 360
Table 38-20—Subcarrier allocation related constants for the UHR-modulated fields in a nonpunctured non-OFDMA UHR PPDU, when IM is enabled 360
Table 38-21—Frequently used parameters 361
Table 38-22—Number of modulated subcarriers and guard interval duration values for UHR PPDU fields .. 368
Table 38-23—U-SIG field of a UHR MU PPDU 375
Table 38-24—Combination of UL/DL field, PPDU Type And Compression Mode field and B2 of U-SIG-2 380
Table 38-25—U-SIG field of a UHR TB PPDU 382
Table 38-26—U-SIG field of a UHR ELR PPDU 386
Table 38-27—Common field for OFDMA transmission 394
Table 38-28—RU Allocation subfield 397
Table 38-29—Common field for a UHR SU transmission, DL SU Co-SR transmission, DL non-OFDMA MU-MIMO transmission, and DL non-OFDMA Co-BF transmission 402
Table 38-30—The common encoding block in a UHR-SIG field for a UHR SU transmission , DL SU Co-SR transmission, and DL non-OFDMA MU-MIMO transmission, and DL non-OFDMA Co-BF transmission ... 405
Table 38-31—The user encoding block 406
Table 38-32—User field format for a non-MU-MIMO allocation or Co−SR allocation 407
Table 38-33—UEQM pattern subfield encoding 409
Table 38-34—User field format for an MU-MIMO allocation or Co-BF allocation 410
Table 38-35—CSD starting index for DBW20 417
Table 38-36—CSD starting index for DBW40 417
Table 38-37—CSD starting index for DBW60 417
Table 38-38—CSD starting index for DBW80 418
Table 38-39—Initial number of UHR-LTFs required for different number of spatial streams 418
Table 38-40—UHR-LTF type and GI duration combinations for various UHR PPDU formats 420
Table 38-41—ELR-SIG field of a UHR ELR PPDU 427
Table 38-42—SERVICE field 430
Table 38-43—LDPC parameters 431
Table 38-44—Values of NSD,short,u when IM is enabled 432
Table 38-45—LDPC tone mapping distance for each RU within an 80 MHz frequency subblock, when IM is enabled 435
Table 38-46—Pilot indices for DRU transmission over 20 MHz 437
Table 38-47—Pilot indices for DRU transmission over 40 MHz 438
Table 38-48—Pilot indices for DRU transmission over 60 MHz 438
Table 38-49—Pilot indices for DRU transmission over 80 MHz 439
Table 38-50—Transmit power and RSSI measurement accuracy 444
Table 38-51—Allowed relative constellation error versus constellation size and coding rate for a UHR non-ELR PPDU(#8229) 451
Table 38-52—Allowed relative constellation error versus constellation size and coding rate for a UHR ELR PPDU(#8230) 452
Table 38-53—iRRU242, start for DBW other than 20 MHz 456
Table 38-54—DRU Spreading Gain in dB 457
Table 38-55— Receiver minimum input level sensitivity for a UHR non-ELR PPDU 458

Copyright © 2025 IEEE. All rights reserved.
This is an unapproved IEEE Standards Draft, subject to change.

Table 38-56—Receiver minimum input level sensitivity for a UHR ELR PPDU 459
Table 38-57—Minimum required adjacent and nonadjacent channel rejection levels for a UHR non-ELR PPDU(#4074)..... 460
Table 38-58—Minimum required adjacent and nonadjacent channel rejection levels for a UHR ELR PPDU(#9200, 9199)..... 461
Table 38-59—UHR PHY MIB attributes 475
Table 38-60—UHR PHY characteristics..... 477
Table 38-61—UHR-MCSs for 26-tone RU, NSS,u = 1 478
Table 38-62—UHR-MCSs for 52-tone RU, NSS,u = 1 479
Table 38-63—UHR-MCSs for 52+26-tone MRU, NSS,u = 1 480
Table 38-64—UHR-MCSs for 106-tone RU, NSS,u = 1 481
Table 38-65—UHR-MCSs for 106+26-tone MRU, NSS,u = 1 482
Table 38-66—UHR-MCSs for 242-tone RU, NSS,u = 1 483
Table 38-67—UHR-MCSs for 484-tone RU, NSS,u = 1 484
Table 38-68—UHR-MCSs for 484+242-tone MRU, NSS,u = 1 485
Table 38-69—UHR-MCSs for 996-tone RU, NSS,u = 1 486
Table 38-70—UHR-MCSs for 996+484-tone MRU, NSS,u = 1 487
Table 38-71—UHR-MCSs for 996+484+242-tone MRU, NSS,u = 1 488
Table 38-72—UHR-MCSs for 2×996-tone RU, NSS,u = 1 489
Table 38-73—UHR-MCSs for 2×996+484-tone MRU, NSS,u = 1 490
Table 38-74—UHR-MCSs for 3×996-tone MRU, NSS,u = 1 491
Table 38-75—UHR-MCSs for 3×996+484-tone MRU, NSS,u = 1 492
Table 38-76—UHR-MCSs for 4×996-tone RU, NSS,u = 1 493
Table 38-77—UHR-MCSs for 242-tone RU, NSS,u = 1, when IM is enabled..... 494
Table 38-78—UHR-MCSs for 484-tone RU, NSS,u = 1, when IM is enabled..... 495
Table 38-79—UHR-MCSs for 996-tone RU, NSS,u = 1, when IM is enabled..... 496
Table 38-80—UHR-MCSs for 2×996-tone RU, NSS,u = 1, when IM is enabled 497
Table 38-81—UHR-MCSs for 4×996-tone RU, NSS,u = 1, when IM is enabled 498
Table 38-82—UHR ELR PPDU with UHR-MCS0 and UHR-MCS1, NSS = 1 499
Table 38-83—UHR-SIG MCSs..... 499

Copyright © 2025 IEEE. All rights reserved.
This is an unapproved IEEE Standards Draft, subject to change.

IEEE P802.11bn™/D1.2

Draft STANDARD for Information Technology— Telecommunications and information exchange between systems— Local and metropolitan area networks— Specific requirements

Part 11: Wireless LAN Medium Access Control (MAC) and Physical Layer (PHY) specifications

Amendment 6: Enhancements for ultra-high reliability (UHR)

[This amendment is based on IEEE Std 802.11-2024 amended by IEEE 802.11bh-2024, IEEE (#8149)802.11be-2024, IEEE P802.11bk/D5.0, IEEE P802.11bf/D8.0, and IEEE P802.11bi/D3.0]

NOTE—The editing instructions contained in this amendment define how to merge the material contained therein into the existing base standard and its amendments to form the comprehensive standard.

The editing instructions are shown in ***bold italic***. Four editing instructions are used: change, delete, insert, and replace. ***Change*** is used to make corrections in existing text or tables. The editing instruction specifies the location of the change and describes what is being changed by using ~~strikethrough~~ (to remove old material) and underscore (to add new material). ***Delete*** removes existing material. ***Insert*** adds new material without disturbing the existing material. Insertions may require renumbering. If so, renumbering instructions are given in the editing instruction. ***Replace*** is used to make changes in figures or equations by removing the existing figure or equation and replacing it with a new one. Editorial instructions, change markings and this NOTE will not be carried over into future editions because the changes will be incorporated into the base standard.

Editorial Notes

Editor's Note: Editorial Notes in the body of the standard appear like this. They will be removed before publication. They may highlight some issue that the editor has had to address during the implementation of a change. Where there may be any technical impact from an editing issue, the editor will raise a technical letter ballot comment. There is no need for voters to comment on such issues unless they have a specific resolution they wish to present.

Editor's Note: Headings with empty content or Headings preceding editing instructions that modify the contents of the referenced subclause are there to provide context to the reader of this document, they have no other significance.

Copyright © 2025 IEEE. All rights reserved.
This is an unapproved IEEE Standards Draft, subject to change.

Editor's Note: The default IEEE-SA style for tables is to "float". This means that they be repositioned later, usually at the head of the next page, to avoid splitting the table and reduce the amount of blank space. The table can appear to move out of the subclause it is referenced first from, and can even split a paragraph. This is the intended IEEE-SA behavior, please do not report it as a defect in the draft. In many cases, additional line feeds have been inserted to force tables to follow text, rather than float beyond sequential text. The additional line feeds will be removed before publication, please do not report them as a defect in the text.

Editor's Note: Line numbering is only approximate. This is a limitation of the FrameMaker tool. Whitespace between paragraphs is part of the IEEE-SA style, as defined in their templates. The combination of these two facts leads to the appearance of blank lines in the draft between every paragraph. Please do not report this as an editorial defect as it is the unavoidable behavior.

Tags:

Tags are placed in this draft near changes to identify the source of the change. Changes resulting from incorporation of an approved proposal are shown like this: (#<number>), where <number> identifies the submission/revision that introduced that change.

These tags will be hidden in versions of the draft sent out to letter ballot - i.e., they are present only to assist the editorial review panel in checking that changes have been properly applied.

Tags are shown close to the point of change. When a whole subclause is new, the heading is tagged.

Otherwise, when a whole paragraph is new, the paragraph is tagged. Otherwise tags are placed after a section of changes within a paragraph or at the end of the paragraph if the changes are substantial.

New tables are tagged in the table caption (if there is one), or in the introductory paragraph. Otherwise, new rows in existing tables are tagged only in the first column, to avoid distraction. Otherwise, a modified cell is tagged.

Finally, any other changes made by the editor (e.g., for grammar, language, style & consistency with other comment resolutions, baseline, etc.) are tagged (#Ed).

Editor's Note: A cumulative status of the versions of this draft is shown below.

Table 1—Draft Status

Draft	Date	Status
D0.1	2025-01-25	
D0.2	2025-03-18	Reflected changes with passed motions in 2025 March meeting
D0.3	2025-05-27	Reflected changes with passed motions in 2025 May meeting
D1.0	2025-08-08	Reflected changes with passed motions in 2025 July meeting

Copyright © 2025 IEEE. All rights reserved.
This is an unapproved IEEE Standards Draft, subject to change.

3. Definitions, acronyms, and abbreviations

3.2 Definitions specific to IEEE 802.11

Insert the following definitions (maintaining alphabetical order):

access point (AP) identifier: [AP ID] A value used for identifying an AP during a multi-AP coordination (MAPC) procedure (Co-BF, Co-SR, or Co-TDMA)(#12273).

access point (AP) periodic unavailability operation: [AP PUO] A mechanism for an access point (AP) to advertise to non-AP stations (STAs) that the AP will be unavailable outside of broadcast target wake time (TWT) service periods.

coordinated access point (AP): [coordinated AP] An AP with which a coordinating AP shares some of its obtained transmission opportunity (TXOP) resources by allocating time portions to the coordinated AP or permitting concurrent transmissions according to the(#11839) a multi-AP coordination (MAPC) procedure.

coordinated beamforming: [Co-BF] A multi-access point (AP) coordination (#11834)scheme in which two APs apply beamforming vectors based on the feedback of the sounding procedure (including cross basic service set (BSS) sounding) to concurrently transmit physical layer (PHY) protocol data units (PPDUs) to each AP's associated non-AP station(s) (STA(s)), wherein the non-AP STAs simultaneously receive PPDUs from their respective associated AP.

coordinated beamforming coordinating access point: [Co-BF coordinating AP] A coordinating AP that initiates Co-BF transmission with another AP.

coordinated beamforming coordinated access point: [Co-BF coordinated AP] A coordinated AP that participates in Co-BF transmission initiated by the Co-BF coordinating AP.

coordinated channel recommendation: [Co-CR] A (#11834)MAPC scheme that enables an AP to coordinate with another AP that does not belong to the same ESS to advertise the same channel for peer-to-peer (P2P) communication.

coordinated restricted target wake time (R-TWT): [Co-RTWT] A (#11834)MAPC scheme that enables an AP to coordinate its R-TWT schedule(s) with OBSS AP(s) to obtain extended protection for its R-TWT schedule(s) from OBSS APs and their BSS.

coordinated restricted target wake time (Co-RTWT) coordinated access point (AP): [Co-RTWT coordinated AP] An AP that extends protection for the R-TWT schedule(s) for which protection is requested by a Co-RTWT requesting AP.

coordinated restricted target wake time (Co-RTWT) negotiation: [Co-RTWT negotiation] A Multi-AP coordination (MAPC) agreement negotiation for Co-RTWT encompassing one or more requested R-TWT schedules.

coordinated restricted target wake time (Co-RTWT) parameter set: [Co-RTWT parameter set] A set of parameters specifying an R-TWT schedule specified by an AP in a Co-RTWT negotiation.

coordinated restricted target wake time (Co-RTWT) requesting access point (AP): [Co-RTWT requesting AP] An AP that requests other OBSS APs to protect one or more of its R-TWT schedules.

Copyright © 2025 IEEE. All rights reserved.
This is an unapproved IEEE Standards Draft, subject to change.

coordinated spatial reuse: [Co-SR] A multi-AP coordination (#11834)scheme in which multiple non-colocated APs perform coordinated concurrent transmissions through transmit power control of the coordinated AP by the coordinating AP.

coordinated spatial reuse coordinating AP: [Co-SR coordinating AP] A coordinating AP that initiates Co-SR transmission with another AP.

coordinated spatial reuse coordinated AP: [Co-SR coordinated AP] A coordinated AP that participates in Co-SR transmission initiated by the Co-SR coordinating AP.

coordinated time division multiple access (TDMA): [Co-TDMA] A multi-AP coordination scheme that enables an AP that has obtained a TXOP to share a time portion of the obtained TXOP with a set of coordinated APs.

coordinated time division multiple access (Co-TDMA) coordinated access point (AP): [Co-TDMA coordinated AP] An AP with which the Co-TDMA coordinating AP shares a time portion of its obtained TXOP.

coordinated time division multiple access (Co-TDMA) non-trigger based (NTB) initial Control frame (ICF): [Co-TDMA NTB ICF] The ICF, as part of the Co-TDMA procedure, that solicits a response from a polled AP in a non-HT PPDU or a non-HT duplicate PPDU.

coordinated time division multiple access (Co-TDMA) negotiation: [Co-TDMA negotiation] A multi-AP coordination (MAPC) agreement negotiation for Co-TDMA.

coordinated time division multiple access (Co-TDMA) trigger based (TB) initial Control frame (ICF): [Co-TDMA TB ICF] The ICF that polls the AP(s) as part of the Co-TDMA procedure and solicits a response from a polled AP in a TB PPDU.

coordinated time division multiple access (Co-TDMA) coordinating access point (AP): [Co-TDMA coordinating AP] A coordinating AP that intends to share a time portion of its obtained TXOP with a set of APs as part of Co-TDMA operation.

coordinating access point (AP): [coordinating AP] An AP that has obtained a transmission opportunity (TXOP) and shares some of its obtained TXOP resources with a set of coordinated APs by either allocating time portions to them or permitting concurrent transmissions (#11839)according to the a multi-AP coordination (MAPC) procedure.

defer signal clear to send (CTS) frame: [DS-CTS] A CTS frame transmitted by a station (STA) to start prioritized enhanced distributed channel access (P-EDCA) contention.

dynamic bandwidth expansion: [DBE] A mode of operation that allows an access point (AP) to dynamically expand its operating bandwidth to be greater than the basic service set (BSS) bandwidth, for ultra-high reliability (UHR) non-AP STAs that support DBE mode.

dynamic bandwidth expansion (DBE) bandwidth: [DBE bandwidth] The operating bandwidth of the access point (AP) for DBE when DBE mode is enabled by the AP. The DBE bandwidth is greater than the AP's basic service set (BSS) bandwidth.

distribution bandwidth: [DBW] A channel width of 20, 40, 60, or 80 MHz over which the subcarriers of a distributed-tone resource unit (DRU) are allocated.

dynamic unavailability operation: [DUO] A mechanism for a non-access point (AP) station (STA) to include unavailability information in certain Control frames to its associated AP.

Copyright © 2025 IEEE. All rights reserved.
This is an unapproved IEEE Standards Draft, subject to change.

ultra-high reliability (UHR) enhanced long range (ELR) physical layer (PHY) protocol data unit (PPDU): [UHR ELR PPDU] A PPDU transmitted with UHR ELR PPDU format. This PPDU carries a single PHY service data unit (PSDU).(#6217)

high capability (HC) mode: A mode in which a station (STA) uses a bandwidth that is not larger than its operating bandwidth and a number of spatial streams that is not larger than its receive (Rx) number of spatial streams (NSS) to perform frame exchanges with its peer STA within a transmission opportunity (TXOP) after the STA receives the initial Control frame from the peer STA in the TXOP.

low capability (LC) mode: A mode in which a station (STA) uses a bandwidth, number of spatial streams, PPDU formats, and possibly MCS, that are supported by its LC mode.

multi-access point (AP) coordination: [MAPC] A framework that includes a set of schemes Co-BF, Co-SR, Co-TDMA, Co-RTWT and Co-CR) and corresponding(#12278) procedures in which APs operating their basic service sets (BSSs) on the same primary 20 MHz channel coordinate the use of their transmission resources(#11888) to reduce interference levels and to improve network performance such as medium utilization efficiency, communication reliability, and latency.

(#4204, 9895)**multi-access point (AP) coordination (MAPC) requesting AP:** [MAPC requesting AP] An AP that initiates a MAPC negotiation with a MAPC responding AP for one or more MAPC schemes.

(#9896)**multi-access point (AP) coordination (MAPC) responding AP:** [MAPC responding AP] An AP that responds to a MAPC requesting AP.

non-access point (AP) station (STA) periodic unavailability operation: [non-AP PUO] A mechanism for a non-access point (AP) station (STA) to indicate to its associated AP that the STA will be unavailable during periodic service periods.

non-extremely-high-throughput (non-EHT) physical layer (PHY) protocol data unit (PPDU): [non-EHT PPDU] A PPDU that is transmitted using a PPDU format defined in Clause 15 (DSSS PHY specification for the 2.4 GHz band designated for ISM applications), Clause 16 (High rate direct sequence spread spectrum (HR/DSSS) PHY specification), Clause 17 (Orthogonal frequency division multiplexing (OFDM) PHY specification), Clause 18 (Extended Rate PHY (ERP) specification), Clause 19 (High Throughput (HT) PHY specification), Clause 21 (Very high throughput (VHT) PHY specification) or Clause 27 (High Efficiency (HE) PHY specification).(#4080)

non primary channel access: [NPCA] A mechanism for peer stations (STAs) to dynamically switch operation from a basic service set (BSS) primary channel to a non primary channel access (NPCA) primary channel when the BSS primary channel is occupied by an overlapping basic service set (OBSS).

Peer-to-peer (P2P) group: [P2P group] A collection of non-AP STAs within which a non-AP STA can communicate with another non-AP STA over a direct link.

polled access point (AP): [polled AP] An AP polled by a coordinating AP in (#6756)an initial Control frame (ICF) that is transmitted as part of a multi-AP coordination scheme.

seamless mobility domain: [SMD] A mobility domain that consists of multiple access point (AP) multi-link devices (AP multi-link devices (MLDs)) where a non-AP MLD(#11896, 11841, Ed) can perform (#8152)seamless mobility domain (SMD) BSS transition between the AP MLDs while maintaining association with the seamless mobility domain(#9939, 5862, 9639, 7099, 11851, 12281) management entity (SMD-ME).

Copyright © 2025 IEEE. All rights reserved.
This is an unapproved IEEE Standards Draft, subject to change.

seamless mobility domain management entity: [SMD-ME] An entity that manages the association, authentication, and security association of a non-access point (non-AP) multi-link device (non-AP MLD(#4601)) within a seamless mobility domain (SMD).

seamless mobility(#4588, 12282, 11417) domain (SMD) basic service set (BSS) transition: [ST] A type of basic service set (BSS) transition that minimizes the duration for which data connectivity is lost between the non-access point (non-AP) multi-link device (non-AP MLD(#4602)) and the distribution system (DS) when the non-AP MLD is moving between AP MLDs(#Ed, 8625) that belong to the same seamless mobility domain (SMD).

seamless mobility domain basic service set transition (ST) preparation request: [ST preparation request](#8153) An(#5859, 5860, 5861, 9640, 8624, 8591, 7100, Ed) ultra-high reliability (UHR) Link Reconfiguration Request frame with the Type field in the frame set to 0 that is transmitted by a non-access point (non-AP) multi-link device (non-AP MLD(#8625, 4603)) to an AP MLD(#8625, Ed) to prepare a target AP MLD for ST(#12355, 5941).

seamless mobility domain basic service set transition (ST) preparation response: [ST preparation response](#8154) An(#8622, Ed) ultra-high reliability (UHR) Link Reconfiguration Response frame with the Type field in the frame set to 0 that is transmitted by an access point (AP) multi-link device (AP MLD(#8625, Ed)) to a non-AP MLD(#8622, Ed) as a response to the ST preparation request(#5941).

seamless mobility domain basic service set transition (ST) execution request: [ST execution request](#8155) An ultra-high reliability (UHR) Link Reconfiguration Request(#5863, 9641, 4271) frame with the Type field in the frame set to 1 that is transmitted by a non-access point (non-AP) multi-link device (non-AP MLD(8625, 4606)) to an AP MLD(#8625, Ed) to execute the ST(#5941).

seamless mobility domain basic service set transition (ST) execution response: [ST execution response](#8156) An ultra-high reliability (UHR) Link Reconfiguration Response frame with the Type field in the frame set to 1 that is transmitted by an access point (AP) multi-link device (AP MLD(#8625)) to a non-AP MLD(#Ed, 8625, 9642) as a response to the ST execution request(#5941).

TXOP sharing with peer-to-peer group (TXSPG): A procedure that enables an AP to share a portion of its obtained (transmit opportunity)(#Ed) TXOP with a peer-to-peer group.

(#Ed, 6702, 7725)ultra-high reliability (UHR) operating mode and parameters (OMP) confirm: [OMP confirm] An ultra-high reliability (UHR) Link Reconfiguration Notify frame that is optionally transmitted by a non-access point (non-AP) multi-link (non-AP MLD), via its affiliated non-AP station (STA), to an AP MLD as confirmation to a UHR OMP response.

ultra-high reliability (UHR) operating mode and parameters (OMP) request: [OMP request] An ultra-high reliability (UHR) Link Reconfiguration Request frame, of Category UHR protected (a Protected UHR Action frame) and with the Type field in the frame set to 3, that is transmitted by a non-access point (non-AP) multi-link (non-AP MLD)(#Ed), via its affiliated non-access point (non-AP) station (STA), to an AP MLD(#Ed) to enable or disable a UHR mode of operation or update the parameters of an enabled mode of operation for the non-AP MLD or its affiliated non-AP STA(s).

ultra-high reliability (UHR) operating mode and parameters (OMP) response: [OMP response] An ultra-high reliability (UHR) Link Reconfiguration Notify frame of Category UHR protected (a Protected UHR Action frame) with the Type field in the frame set to 3 that is transmitted by an access point (AP) multi-link device (AP MLD)(#Ed), via its affiliated AP, to a non-AP MLD(#Ed) as a response to the UHR OMP request.

Copyright © 2025 IEEE. All rights reserved.
This is an unapproved IEEE Standards Draft, subject to change.

3.4 Abbreviations and acronyms

Insert the following acronym definitions (maintaining alphabetical order):

CFO	carrier frequency offset
DBE	dynamic bandwidth expansion
DBW	distribution bandwidth
DPS	dynamic power save
DRU	distributed-tone resource units
DSO	dynamic subband operation
DUO	dynamic unavailability operation
ELR	enhanced long range
EOTSP	end of traffic for service period
ICF	initial Control frame
ICR	initial Control response
IFCS	intermediate FCS
IM	interference mitigation
LLI	low-latency indication
LOM	limited operation mode
MLPM	multi-link power management
NPCA	non-primary channel access
OMP	operating mode and parameters
P-EDCA	prioritized EDCA
PUO	periodic unavailability operation
RRU	regular RU
SMD	seamless mobility domain
ST	SMD BSS transition(#6757)
UEQM	unequal modulation
UHR	ultra-high reliability

Copyright © 2025 IEEE. All rights reserved.
This is an unapproved IEEE Standards Draft, subject to change.

4. General description

4.3 Components of the IEEE Std 802.11 architecture

4.3.5 Distribution system (DS) concepts

4.3.5.2 Extended service set (ESS): the large coverage network

Change the first paragraph as follows:

The DS and infrastructure BSSs allow IEEE Std 802.11 to create a wireless network of arbitrary size and complexity. IEEE Std 802.11 refers to this type of network as the ESS. An ESS is the union of the infrastructure BSSs with the same SSID connected by a single DS. All BSSs in an ESS have the same SSID. All BSSs created by APs affiliated with an AP MLD have the same SSID and belong to the same ESS. An AP MLD is part of the same ESS as its affiliated APs. All BSSs created by APs affiliated with any(#9922) AP MLD in a seamless mobility domain (SMD)(#9914) belong to the same ESS. The ESS does not include the DS.

Insert the following new subclause at the end of subclause 4.3:

4.3.17a (#Ed)Ultra-high reliability (UHR) STA

Editor's Note: It is a placeholder subclause1

4.5 Overview of the services

4.5.3 Connectivity-related services

4.5.3.2 Mobility types

Change the first paragraph as follows:

The ~~two~~three transition types that are supported within this standard that describe the mobility of non-GLK STAs or MLDs within a network are as follows:

a) ***No-transition:*** In this type, two subclasses that are usually indistinguishable are identified:
   1) Static—no motion.
   2) Local movement—movement within the PHY range of the communicating STAs, i.e., movement within a basic service area (BSA).

b) ***BSS-transition:*** This type is defined for a STA or an MLD as follows:
   1) (non-MLO to non-MLO): A STA movement from one BSS in one ESS to another BSS within the same ESS.

   NOTE—A nonmobility based transition from a BSS to the same BSS (same AP or PCP) or from one AP MLD to the same AP MLD is also supported. See 11.3.5.4 (Non-AP STA, non-AP MLD, and non-PCP STA reassociation initiation procedures).

   2) (MLO to MLO): A non-AP MLD movement from one AP MLD in one ESS, where each non-AP STA affiliated with the non-AP MLD is within one BSS and different non-AP STAs affiliated with the non-AP MLD are within different BSSs, to another AP MLD within the same ESS, where each non-AP STA affiliated with the non-AP MLD is within another BSS and different non-AP STAs affiliated with the non-AP MLD are within different BSSs.
   3) (MLO to non-MLO): A non-AP MLD movement from one AP MLD in one ESS, where each non-AP STA affiliated with the non-AP MLD is within one BSS and different non-AP STAs

Copyright © 2025 IEEE. All rights reserved.
This is an unapproved IEEE Standards Draft, subject to change.

affiliated with the non-AP MLD are within different BSSs, to another BSS within the same ESS and becoming a non-AP STA, where the MLD MAC address of the non-AP MLD is the same as the MAC address of the non-AP STA.

4) (non-MLO to MLO): A non-AP STA movement from one BSS in one ESS to an AP MLD within the same ESS and becoming a non-AP MLD, where each non-AP STA affiliated with the non-AP MLD is within another BSS, different non-AP STAs affiliated with the non-AP MLD are within different BSSs and the MAC address of the non-AP STA is the same as the MLD MAC address of the non-AP MLD.

A fast BSS transition is a BSS transition that establishes the state necessary for data connectivity before the reassociation rather than after the reassociation.

c) SMD BSS transition: This type is defined for an MLD as follows:

1) A non-AP MLD movement from one AP MLD in one SMD to another AP MLD within the same SMD.

A ~~third~~fourth type of transition is STA movement from a BSS in one ESS to a BSS in a different ESS or a non-AP MLD movement from an AP MLD in one ESS to another AP MLD in a different ESS. Maintenance of upper layer connections during transition between ESSs cannot be guaranteed by IEEE Std 802.11; disruption of service is likely to occur.

Move the following fifth paragraph as the first paragraph of this subclause:

The different association services support the different categories of non-GLK mobility.

4.5.3.3 Association

Change the second paragraphs as follows:

To deliver an MSDU within an ESS via the DS, the DS needs to know which AP or AP MLD within the ESS to deliver the MSDU to, so that the MSDU might ultimately be delivered to the addressed IEEE 802.11 non-AP STA or non-AP MLD. This information is provided to the DS by the concept of association. Association is necessary, but not sufficient, to support BSS-transition mobility. Association is sufficient to support no-transition mobility. Association is one of the services in the DSS.

Before a non-AP STA is allowed to deliver an MSDU via an AP, it first becomes associated with the AP. Before a non-AP MLD is allowed to deliver an MSDU via an AP MLD, it first becomes associated with the AP MLD. If an AP MLD is part of an SMD, before a UHR non-AP MLD that supports SMD BSS transition is allowed to deliver an MSDU via the AP MLD, it first becomes associated with the SMD-ME.

For a non-GLK STA that is not affiliated with an MLD, the act of becoming associated with an AP invokes the association service, which provides the STA to AP mapping to the DS. For a non-AP MLD, the act of becoming associated with an AP MLD invokes the association service (see 11.3 (Authentication and association)(#7250)), which provides the non-AP MLD to AP MLD mapping to the DS. How the information provided by the association service is stored and managed within the DS is not specified by this standard.

4.5.4 Access control and data confidentiality services

Change the third, fourth, sixth paragraph as follows:

4.5.4.2 Authentication

IEEE Std 802.11 defines the following IEEE 802.11 authentication methods:

— Open System authentication admits any STA to the DS.

Copyright © 2025 IEEE. All rights reserved.
This is an unapproved IEEE Standards Draft, subject to change.

— FT authentication relies on keys derived during the initial mobility domain association to authenticate the stations as defined in Clause 13 (Fast BSS transition).

— SAE authentication uses finite field cryptography to prove knowledge of a shared password.

— IEEE 802.1X authentication uses EAP to authenticate STAs and the AS with one another.

— FILS authentication allows for faster connection to the network for FILS non-AP STAs by providing authentication, association, and key confirmation information in an efficient number of frame exchanges (see 4.10.3.6 (AKM operations using FILS authentication)).

— PASN, ~~and~~ EDPKE and MAPC PASN authentication allows for the protection of Management frames without association by establishing a PTKSA using authentication frames. The IEEE 802.11 authentication mechanism also allows definition of new authentication methods, or any combination of these authentication methods.

Add the following paragraph at the end of the subclause as follows:

MAPC authentication is used in an RSN for a Multi-AP Coordination framework when it is based on a PMKSA established by another RSN authentication protocol. Otherwise, it does not guarantee mutual authentication, and can be used as a non-RSN protocol in a Multi-AP Coordination framework.

Copyright © 2025 IEEE. All rights reserved.
This is an unapproved IEEE Standards Draft, subject to change.

5. MAC service definition

5.2 MAC data service specification

5.2.4 MA-UNITDATA.request

5.2.4.2 Semantics of the service primitive

Change the primitive parameters as follows (not all existing parameters are shown):

The parameters of the primitive are as follows:

MA-UNITDATA.request(
...
MSDU format,
radio environment request vector,
SCSID,(#11418)
L4S
)

Insert the following paragraph as the last paragraph of the subclause:

The L4S parameter is a Boolean that indicates whether the corresponding MSDU belongs to an L4S flow. If the MSDU has the ECN bits set to 01 or 11 in the IP header (see Table 5-2a (ECN field definition ([RFC 9331]))) contained within the MSDU then the L4S parameter is set to true, otherwise L4S parameter is set to false. The L4S parameter is present if dot11L4SImplemented is true; and is not present otherwise.

Insert the following table after the previous paragraph:

Table 5-2a—ECN field definition ([RFC 9331])

ECN codepoint	Binary	L4S meaning
Not-ECT	00	Not ECN-capable transport
ECT(0)	10	Classic ECN-capable transport
ECT(1)	01	L4S-capable transport
CE	11	Congestion experienced

Copyright © 2025 IEEE. All rights reserved.
This is an unapproved IEEE Standards Draft, subject to change.

6. Layer management

6.3.7 Type 6

Add the following text after Figure 6-7—Type 6 form of MLME SAP primitives for SME requesting MLME to perform a process not requiring a confirmation

NOTE—One usage of the Type 6 form is shown in (#9928)Figure 6-7a (Example usage of the Type 6 form of MLME SAP primitives, to notify the MLMEs of a STA and peer STA of communications between the SMEs of the STAs).

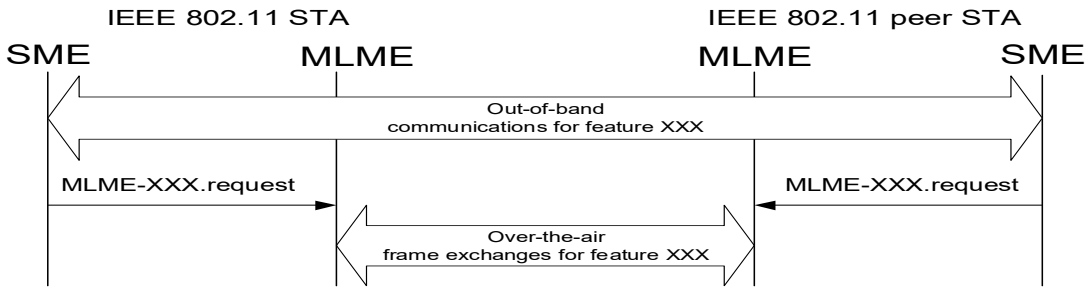

Figure 6-7a—Example usage of the Type 6 form of MLME SAP primitives, to notify the MLMEs of a STA and peer STA of communications between the SMEs of the STAs

6.4 Table of MLME SAP interfaces

Insert the following entries at the end of Table 6-1 (not all entries are shown):

Table 6-1— MLME SAP interface

Service Name	MLME-XXX	Type	References	Comments
Multi-AP Coordination Over-the-Air	MULTIAPCOORD-OVERTHEAIR	1	9.6.7.68 (MAPC Negotiation Request frame format), 9.6.7.69 (MAPC Negotiation Response frame format) and 9.6.10 (Protected Dual of Public Action frame details)	See 37.15 (Multi-AP coordination (MAPC) framework)
Multi-AP Coordination Over-the-DS	MULTIAPCOORD-OVERTHEDS	6	9.6.7.68 (MAPC Negotiation Request frame format), 9.6.7.69 (MAPC Negotiation Response frame format) and 9.6.10 (Protected Dual of Public Action frame details)	See 37.15 (Multi-AP coordination (MAPC) framework). After SMEs at initiating and peer APs establish an agreement, each SME uses the MLME interface of Type 6 to report the agreement (expressed as the union of the contents of the request and response frames) to its respective MLME.

Copyright © 2025 IEEE. All rights reserved.
This is an unapproved IEEE Standards Draft, subject to change.

6.5 MLME SAP primitives

6.5.3 Scan

6.5.3.2 MLME-SCAN.request

6.5.3.2.2 Semantics of the service primitive

Change the primitive parameters as follows (not all existing parameters are shown):

The primitive parameters are as follows:

MLME-SCAN.request(
…,
UHR Capabilities,
VendorSpecificInfo
)

Name	Type	Valid range	Description
...			
UHR Capabilities	As defined in UHR Capabilities element	As defined in 9.4.2.354 (UHR Capabilities element)	Specifies the UHR capabilities of the STA. The parameter is present if dot11UHROptionImplemented is true; otherwise, not present.
VendorSpecificInfo	A set of elements	As defined in 9.4.2.24 (Vendor Specific element)	Zero or more elements.

6.5.3.3 MLME-SCAN.confirm

6.5.3.3.2 Semantics of the service primitive

Insert the following rows to the end of the untitled IBSS adoption table:

Name	Type	Valid range	Description	IBSS adoption
UHR Capabilities	As defined in UHR Capabilities element	As defined in 9.4.2.354 (UHR Capabilities element)	The value from the UHR Capabilities element. The parameter is present if dot11UHROptionImplemented is true and a UHR Capabilities element was present in the Probe Response from which the BSSDescriptionSet was determined. Otherwise, the parameter is not present.	Do not adopt
UHR Operation	As defined in UHR Operation element	As defined in 9.4.2.353 (UHR Operation element)(#6819)	The value from the UHR Operation element. The parameter is present if dot11UHROptionImplemented is true and a UHR Operation element was present in the Probe Response or Beacon frame from which the BSSDescriptionSet was determined. Otherwise, the parameter is not present.	Adopt

Copyright © 2025 IEEE. All rights reserved.
This is an unapproved IEEE Standards Draft, subject to change.

6.5.4 Synchronization

6.5.4.2 MLME-JOIN.request

6.5.4.2.2 Semantics of the service primitive

Change the primitive parameters as follows (not all existing parameters are shown):

The primitive parameters are as follows:

MLME-JOIN.request(
…,
UHR Capabilities,
VendorSpecificInfo
)

Name	Type	Valid range	Description
…			
UHR Capabilities	As defined in UHR Capabilities element	As defined in 9.4.2.354 (UHR Capabilities element)	Specifies the UHR capabilities of the STA. The parameter is present if dot11UHROptionImplemented is true; otherwise, not present.
VendorSpecificInfo	A set of elements	As defined in 9.4.2.24 (Vendor Specific element)	Zero or more elements.

6.5.7 Associate

6.5.7.2 MLME-ASSOCIATE.request(#7559)

6.5.7.2.2 Semantics of the service primitive

Change the primitive parameters as follows (not all existing parameters are shown) and insert a NOTE after the primitive:

The primitive parameters are as follows:

MLME-ASSOCIATE.request(
...
UHR Capabilities,
VendorSpecificInfo
)

Name	Type	Valid range	Description
...			
UHR Capabilities	As defined in UHR Capabilities element	As defined in 9.4.2.354 (UHR Capabilities element)	Specifies the UHR capabilities of the non-AP STA. The parameter is present if dot11UHROptionImplemented is true; otherwise, not present.
VendorSpecificInfo	A set of elements	As defined in 9.4.2.24 (Vendor Specific element)	Zero or more elements.

Copyright © 2025 IEEE. All rights reserved.
This is an unapproved IEEE Standards Draft, subject to change.

6.5.7.3 MLME-ASSOCIATE.confirm

6.5.7.3.2 Semantics of the service primitive

Change the primitive parameters as follows (not all existing parameters are shown):

The primitive parameters are as follows:

MLME-ASSOCIATE.confirm(
...
UHR Capabilities,
UHR Operation,
VendorSpecificInfo
)

Name	Type	Valid range	Description
...			
UHR Capabilities	As defined in UHR Capabilities element	As defined in 9.4.2.354 (UHR Capabilities element)	Specifies the UHR capabilities of the AP. The parameter is present if dot11UHROptionImplemented is true; otherwise, not present.
UHR Operation	As defined in UHR Operation element	As defined in 9.4.2.353 (UHR Operation element)(#6819)	Provides additional information for operating in the UHR BSS. This parameter is present if dot11UHROptionImplemented is true; otherwise, not present.
VendorSpecificInfo	A set of elements	As defined in 9.4.2.24 (Vendor Specific element)	Zero or more elements.

6.5.7.4 MLME-ASSOCIATE.indication

6.5.7.4.2 Semantics of the service primitive

Change the primitive parameters as follows (not all existing parameters are shown):

The primitive parameters are as follows:

MLME-ASSOCIATE.indication(
...
UHR Capabilities,
VendorSpecificInfo
)

Name	Type	Valid range	Description
...			
UHR Capabilities	As defined in UHR Capabilities element	As defined in 9.4.2.354 (UHR Capabilities element)	Specifies the UHR capabilities of the non-AP STA. The parameter is present if dot11UHROptionImplemented is true; otherwise, not present.
VendorSpecificInfo	A set of elements	As defined in 9.4.2.24 (Vendor Specific element)	Zero or more elements.

Copyright © 2025 IEEE. All rights reserved.
This is an unapproved IEEE Standards Draft, subject to change.

6.5.7.5 MLME-ASSOCIATE.response

6.5.7.5.2 Semantics of the service primitive

Change the primitive parameters as follows (not all existing parameters are shown):

The primitive parameters are as follows:

MLME-ASSOCIATE.response(
...
UHR Capabilities,
UHR Operation,
VendorSpecificInfo
)

Name	Type	Valid range	Description
...			
UHR Capabilities	As defined in UHR Capabilities element	As defined in 9.4.2.354 (UHR Capabilities element)	Specifies the UHR capabilities of the AP. The parameter is present if dot11UHROptionImplemented is true; otherwise, not present.
UHR Operation	As defined in UHR Operation element	As defined in 9.4.2.353 (UHR Operation element)(#6819)	Provides additional information for operating in the UHR BSS. This parameter is present if dot11UHROptionImplemented is true; otherwise, not present.
VendorSpecificInfo	A set of elements	As defined in 9.4.2.24 (Vendor Specific element)	Zero or more elements.

6.5.8 Reassociate

6.5.8.2 MLME-REASSOCIATE.request

6.5.8.2.2 Semantics of the service primitive

Change the primitive parameters as follows (not all existing parameters are shown):

The primitive parameters are as follows:

MLME-REASSOCIATE.request(
...
UHR Capabilities,
VendorSpecificInfo
)

Name	Type	Valid range	Description
...			
UHR Capabilities	As defined in UHR Capabilities element	As defined in 9.4.2.354 (UHR Capabilities element)	Specifies the UHR capabilities of the non-AP STA. The parameter is present if dot11UHROptionImplemented is true; otherwise, not present.
VendorSpecificInfo	A set of elements	As defined in 9.4.2.24 (Vendor Specific element)	Zero or more elements.

Copyright © 2025 IEEE. All rights reserved.
This is an unapproved IEEE Standards Draft, subject to change.

6.5.8.3 MLME-REASSOCIATE.confirm

6.5.8.3.2 Semantics of the service primitive

Change the primitive parameters as follows (not all existing parameters are shown):

The primitive parameters are as follows:

MLME-REASSOCIATE.confirm(
...
UHR Capabilities,
UHR Operation,
VendorSpecificInfo
)

Name	Type	Valid range	Description
...			
UHR Capabilities	As defined in UHR Capabilities element	As defined in 9.4.2.354 (UHR Capabilities element)	Specifies the UHR capabilities of the AP. The parameter is present if dot11UHROptionImplemented is true; otherwise, not present.
UHR Operation	As defined in UHR Operation element	As defined in 9.4.2.353 (UHR Operation element)(#6819)	Provides additional information for operating in the UHR BSS. This parameter is present if dot11UHROptionImplemented is true; otherwise, not present.
VendorSpecificInfo	A set of elements	As defined in 9.4.2.24 (Vendor Specific element)	Zero or more elements.

6.5.8.4 MLME-REASSOCIATE.indication

6.5.8.4.2 Semantics of the service primitive

Change the primitive parameters as follows (not all existing parameters are shown):

The primitive parameters are as follows:

MLME-REASSOCIATE.indication(
...
UHR Capabilities,
VendorSpecificInfo
)

Name	Type	Valid range	Description
...			
UHR Capabilities	As defined in UHR Capabilities element	As defined in 9.4.2.354 (UHR Capabilities element)	Specifies the UHR capabilities of the non-AP STA. The parameter is present if dot11UHROptionImplemented is true and the UHR Capabilities element is present in the Reassociation Request frame received from the STA; otherwise, not present.
VendorSpecificInfo	A set of elements	As defined in 9.4.2.24 (Vendor Specific element)	Zero or more elements.

Copyright © 2025 IEEE. All rights reserved.
This is an unapproved IEEE Standards Draft, subject to change.

6.5.8.5 MLME-REASSOCIATE.response

6.5.8.5.2 Semantics of the service primitive

Change the primitive parameters as follows (not all existing parameters are shown):

The primitive parameters are as follows:

MLME-REASSOCIATE.response(
...
UHR Capabilities,
UHR Operation,
VendorSpecificInfo
)

Name	Type	Valid range	Description
...			
UHR Capabilities	As defined in UHR Capabilities element	As defined in 9.4.2.354 (UHR Capabilities element)	Specifies the UHR capabilities of the AP. The parameter is present if dot11UHROptionImplemented is true; otherwise, not present.
UHR Operation	As defined in UHR Operation element	As defined in 9.4.2.353 (UHR Operation element)(#6819)	Provides additional information for operating in the UHR BSS. This parameter is present if dot11UHROptionImplemented is true; otherwise, not present.
VendorSpecificInfo	A set of elements	As defined in 9.4.2.24 (Vendor Specific element)	Zero or more elements.

6.5.11 Start

6.5.11.2 MLME-START.request

6.5.11.2.2 Semantics of the service primitive

Change the primitive parameters as follows (not all existing parameters are shown):

The primitive parameters are as follows:

MLME-START.request(
…,
UHR Capabilities,
UHR Operation,
VendorSpecificInfo
)

Name	Type	Valid range	Description
…			
UHR Capabilities	As defined in UHR Capabilities element	As defined in 9.4.2.354 (UHR Capabilities element)	Specifies the UHR capabilities of the AP. The parameter is present if dot11UHROptionImplemented is true; otherwise, not present.

Copyright © 2025 IEEE. All rights reserved.
This is an unapproved IEEE Standards Draft, subject to change.

Name	Type	Valid range	Description
UHR Operation	As defined in UHR Operation element	As defined in 9.4.2.353 (UHR Operation element)(#6819)	Provides additional information for operating the UHR BSS. This parameter is present if dot11UHROptionImplemented is true; otherwise, not present.
VendorSpecificInfo	A set of elements	As defined in 9.4.2.24 (Vendor Specific element)	Zero or more elements.

Add the following new MLME primitive in this clause

6.5.33 L4S explicit congestion notification

6.5.33.1 Introduction

This mechanism supports the notification of congestion experienced at the MAC layer for L4S MSDUs to the higher layer for marking of ECN bits at the IP layer for L4S congestion experienced (CE) signalling.

6.5.33.2 MLME-L4S-CONGESTION-EXPERIENCED.indication(#5899)

6.5.33.2.1 Function

This primitive provides an indication that congestion is experienced in the downlink transmit queues at the MAC layer of the AP for L4S MSDUs.

6.5.33.2.2 Semantics of the service primitive

The primitive parameters are as follows:

```
MLME-L4S-CONGESTION-EXPERIENCED.indication(
                                    Source Address,
                                    Destination Address,
                                    Priority,
                                    SCSID,
                                    Congestion Experienced,
                                    MSDU Congestion Marking Probability,
                                    Congestion Information
                                    )
```

Name	Type	Valid range	Description
Source Address	MAC address	Any valid individual address	Specifies the SA field of an L4S MSDU that experienced congestion at the MAC layer.
Destination Address	MAC address	Any valid individual or group address	Specifies the DA field of an L4S MSDU that experienced congestion at the MAC layer.
Priority	Integer	As defined in 5.1.1.3 (Interpretation of priority parameter in MAC service primitives)	Specifies the priority corresponding to an L4S MSDU that experienced congestion at the MAC layer.

Copyright © 2025 IEEE. All rights reserved.
This is an unapproved IEEE Standards Draft, subject to change.

Name	Type	Valid range	Description
SCSID	Integer	≥ 0	Identifies the DL SCS stream (if any) to which the L4S MSDU that experienced congestion belongs. If the L4S MSDU experiencing congestion does not belong to an SCS stream, then SCSID is set to 0. This parameter is present if dot11SCSActivated is true; and is not present otherwise.
Congestion Experienced	Boolean	true, false	Specifies whether congestion is experienced in the downlink transmit queues at the MAC layer for L4S MSDU(s). It is set to true to indicate that the congestion is experienced in the downlink transmit queues at the MAC layer for L4S MSDU(s) belonging to the specified Priority or SCSID (if present and set to nonzero value). If the congestion is no longer experienced in the downlink transmit queues at the MAC layer for L4S MSDU(s), then this parameter is set to false.
MSDU Congestion Marking Probability	Non-negative real number	> 0, ≤ 100	Provides the likelihood with which the upper layer can perform ECN congestion experienced (CE) marking (i.e. setting ECN=11) for subsequent downlink L4S MSDUs belonging to the specified Priority and/or SCSID. This parameter is present if the Congestion Experienced parameter is set to true; and is not present otherwise. (#6143)NOTE—The computation of MSDU Congestion Marking Probability is implementation specific.
Congestion Information	Octet string	0-1023 octets	Provides a container to specify further information related to congestion experienced in the downlink transmit queues at the MAC layer for L4S MSDUs. This parameter is optionally present if the Congestion Experienced parameter is set to true; and is not present otherwise.

6.5.33.2.3 When generated

This primitive is generated by the MAC layer at the AP when congestion is experienced in downlink transmit queues at the MAC layer for L4S MSDUs and the dot11L4SImplemented is true.

6.5.33.2.4 Effect of receipt

The primitive triggers the upper layer to perform ECN congestion experienced (CE) marking of subsequent L4S MSDUs belonging to the specified Priority and/or SCSID (by setting ECN=11), to signal that the congestion is experienced by L4S traffic at the AP.

Copyright © 2025 IEEE. All rights reserved.
This is an unapproved IEEE Standards Draft, subject to change.

9. Frame formats

9.2 MAC frame formats

9.2.4.5 QoS Control field

9.2.4.5.1 QoS Control field structure

Change row 6 of Table 9-10 (QoS(#5900) Control field) as follows:

Table 9-10—QoS(#5900) Control field

Applicable frame (sub)types	Bits 0-3	Bit 4	Bit 5-6	Bit 7	Bit 8	Bit 9	Bit 10	Bit 11-15
...	...	...	...	...	...			
QoS Data and QoS Data+CF-Ack frames sent in a nonmesh BSS by non-AP STAs that are not a TPU buffer STA or a TPU sleep STA	TID	0	Ack Policy Indicator	(#5901)A-MSDU Present	TXOP Duration Requested			
	TID	1	Ack Policy Indicator	A-MSDU Present	Queue Size			
QoS Null frames sent in a nonmesh BSS by non-AP STAs that are not a TPU buffer STA or a TPU sleep STA	TID	0	Ack Policy Indicator	Reserved	TXOP Duration Requested			
	TID	1	Ack Policy Indicator	~~Reserved~~ EOTSP if sent by a STA with dot11UH-REOTSPImplemented equal to true, otherwise reserved	Queue Size			
...	...	...	...	...	...	...	...	...

Add the following subclause after 9.2.4.5.16 Buffered AC subfield:(#Ed, 8163, 11631)

9.2.4.5.17 EOTSP subfield

The End of Traffic for SP (EOTSP) subfield indicates if there is no further pending traffic from the transmitting non-AP STA during the current TWT service period. The EOTSP subfield is set to 1 if the transmitting non-AP STA does not have any more pending traffic to be delivered during the current TWT service period, and it is set to 0 if the transmitting non-AP STA either has more pending traffic to be delivered or does not know whether there is more pending traffic during the current TWT service period.

Copyright © 2025 IEEE. All rights reserved.
This is an unapproved IEEE Standards Draft, subject to change.

9.2.4.6 HT Control field

9.2.4.6.4 HE variant

Change Table 9-25 (Control ID subfield values) as follows:

Table 9-25—Control ID subfield values

Control ID value	Meaning	Length of the Control Information subfield (bits)	Content of the Control Information subfield
0	Triggered response scheduling (TRS)	26	See 9.2.4.7.1 (TRS Control).
1	Operating mode (OM)	12	See 9.2.4.7.2 (OM Control).
2	HE link adaptation (HLA)/EHT link adaptation (ELA)	26	See 9.2.4.7.3 (HLA Control)/ 9.2.4.7.11 (ELA Control). (See 9.2.4.7.11 (ELA Control) for disambiguating HLA Control and ELA Control.).
3	Buffer status report (BSR)	26	See 9.2.4.7.4 (BSR Control).
4	UL power headroom (UPH)	8	See 9.2.4.7.5 (UPH Control).
5	Bandwidth query report (BQR)	10	See 9.2.4.7.6 (BQR Control).
6	Command and status (CAS)	8	See 9.2.4.7.7 (CAS Control).
7	EHT operating mode (EHT OM)	6	See 9.2.4.7.8 (EHT OM Control).
8	Single response scheduling (SRS)	10	See 9.2.4.7.9 (SRS Control).
9	AP assistance request (AAR)	20	See 9.2.4.7.10 (AAR Control).
10	Multi-link power management (MLPM)	20	See 9.2.4.7.12 (MLPM Control).(#4084)
11	Enhanced buffer status report (EBSR)	14	See 9.2.4.7.13 (EBSR Control).
12–14(#11634) ~~10–14~~	Reserved		(#4755, 5238, 10161, 10263, 11632)
15	Ones need expansion surely (ONES)	26	Set to all 1s.

9.2.4.7 Control subfield variants of an A-Control subfield

Please add the following subclause 9.2.4.7.12 (MLPM Control) after 9.2.4.7.11 (ELA Control)(#Ed, 11636, 8165)

9.2.4.7.12 MLPM Control

The Control Information subfield in an MLPM Control subfield (#8224)contains the power management mode of non-AP STA(s) affiliated with a non-AP MLD.

The format of this subfield is shown in (#Ed)Figure 9-38a (Control Information subfield format of(#8226) an MLPM Control subfield).

Copyright © 2025 IEEE. All rights reserved.
This is an unapproved IEEE Standards Draft, subject to change.

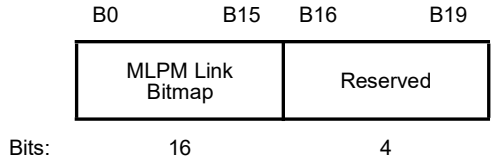

Figure 9-38a—Control Information subfield format of(#8226) an MLPM Control subfield

The MLPM Link Bitmap field indicates the power management mode of the non-AP STA(s) affiliated with the non-AP MLD. The bit position *i* of the MLPM Link Bitmap field corresponds to the non-AP STA operating on the link with link ID equal to *i* and set to 1 to indicate that the non-AP STA is in power save mode and is set to 0 to indicate that the non-AP STA is in active mode(#4449, 11639).

Please add the following subclause 9.2.4.7.13 EBSR Control after 9.2.4.7.12 MLPM Control(#8166)

9.2.4.7.13 EBSR Control

The Control Information field in an EBSR Control field contains buffer status information used for UL MU operation (see 26.5.2 (UL MU operation)) and enhanced BSR operation (see 37.11 (Enhanced Buffer status report operation)) when the amount of buffered traffic of a given TID is larger than the amount that the QoS Control field or the BSR Control field can indicate.

The format of the Control Information field of(#8228) the EBSR Control field is shown in (#Ed)Figure 9-38b (Control Information field format in an(#8231) EBSR Control field).

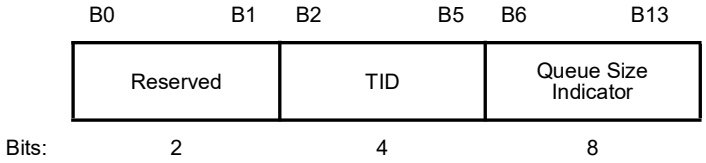

Figure 9-38b—Control Information field format in an(#8231) EBSR Control field

The TID field indicates the TID (see 9.2.4.5.2 (TID subfield)) for which the buffer status is reported.

The Queue Size Indicator field indicates the unscaled amount of buffered traffic for the TID identified in the TID field at the STA sending the frame containing the EBSR Control field, and that is intended for the STA identified by the receiver address of the frame containing the EBSR Control field.

A queue size, *QS*,(#8167) is the approximate total size, in octets, of all MSDUs and A-MSDUs buffered at the STA (including the MSDUs or A-MSDUs in the same PSDU as the frame containing the EBSR Control field) in the delivery queue used for MSDUs and A-MSDUs with a TID value equal to the value indicated in the TID field of this EBSR Control field.

NOTE 1—The queue size is based on data received by the STA at the MAC SAP (MA-UNITDATA.request). Any data in layers above the MAC is not taken into account.

NOTE 2—Buffered MSDUs are those that have been received in an MA-UNITDATA.request but that have not been successfully transmitted and have not been discarded.

A STA determines the amount of buffered traffic in octets from the value, *QSI*, indicated in the received Queue Size Indicator field in an EBSR Control field as follows:

— *QS* is 2 147 328 + 131 072×(*QSI*+1) if *QSI* is < 255.

Copyright © 2025 IEEE. All rights reserved.
This is an unapproved IEEE Standards Draft, subject to change.

— *QS* is > 35 570 688 if *QSI* is 255.(#4085, #6140, #8233, #6140, #10617)

NOTE 3—Length of the EBSR Control field allows an EBSR Control field to be aggregated with a UPH Control field in an A-Control subfield if the frame is carried in a TB PPDU.

9.2.4.8 Frame Body field

9.2.4.8.1 General

Change (#Ed, 8168, 11846)Table 9-38 (Maximum data unit sizes and durations) (only relevant rows and columns shown) as follows:

Table 9-38—Maximum data unit sizes and durations

	…	HE PPDU	EHT PPDU	UHR PPDU	…
MMPDU size (in octets)	…	2.4 GHz band: see NOTE 11 Otherwise: see NOTE 1	2.4 GHz band: see NOTE 11 Otherwise: see NOTE 1	2.4 GHz band: see NOTE 11 Otherwise: see NOTE 1	…
MSDU size (in octets)	…	2304	2304	2304	…
A-MSDU size (in octets)	…	2.4 GHz band of a non-EHT STA: 3839 or 7935 (see also Table 9-224 (Subfields of the HT Capability Information field)) Otherwise: see NOTE 3	See NOTE 3	See NOTE 3	…
MPDU size (in octets)	…	2.4 GHz band of a non-EHT STA: see NOTE 5 Otherwise: 3895 or 7991 or 11 454 (see also Table 9-313 (Subfields of the VHT Capabilities Information field), 9.4.2.262 (HE 6 GHz Band Capabilities element), and Table 9-bb3 (Fields of the UHR MAC Capabilities Information field)) See NOTE 7	3895 or 7991 or 11 454 (see also Table 9-313 (Subfields of the VHT Capabilities Information field), 9.4.2.262 (HE 6 GHz Band Capabilities element), and Table 9-bb3 (Fields of the UHR MAC Capabilities Information field)) See NOTE 10	3895 or 7991 or 11 454 (see also Table 9-313 (Subfields of the VHT Capabilities Information field), 9.4.2.262 (HE 6 GHz Band Capabilities element), and Table 9-bb3 (Fields of the UHR MAC Capabilities Information field)) See NOTE 10	…
PSDU size (in octets)	…	6 500 631 (~$2^{22.63}$) (see Table 27-61 (HE PHY characteristics))	15 523 200 (~$2^{23.89}$) (see Table 36-70 (EHT PHY characteristics))	(see Table 38-60 (UHR PHY characteristics))	…
PPDU duration (in microseconds)	…	5484 (see Table 27-61 (HE PHY characteristics))	5484 (see Table 36-70 (EHT PHY characteristics))	(see Table 38-60 (UHR PHY characteristics))	…
…					

Copyright © 2025 IEEE. All rights reserved.
This is an unapproved IEEE Standards Draft, subject to change.

9.2.5 Duration/ID field (QoS STA)

9.2.5.2 Setting for single and multiple protection under enhanced distributed channel access (EDCA)

Insert the following paragraph at the end of subclause 9.2.5.2

In a Co-BF sounding invite or a Co-BF Sounding Response frame generated by a UHR STA as part of a cross-BSS UHR Co-BF sounding or Co-BF joint NDP sounding sequence the Duration/ID field is set as follows:

— In a Co-BF Sounding Invite frame, the Duration/ID field is set to the estimated time, in microseconds, required to transmit at least the UHR NDP Announcement frame sent by the Co-BF sounding initiator, plus one Co-BF Sounding Response frame, plus one NDP, plus applicable IFSs and any necessary ICF/ICR for STA(s).

— In a Co-BF Sounding Response frame that is sent as a response to the Co-BF Sounding Invite frame, the Duration/ID field is set to the estimated time, in microseconds, required to transmit at least the UHR NDP Announcement frame sent by the Co-BF sounding initiator, plus one NDP, plus applicable IFSs and any necessary ICF/ICR for STA(s).

9.3 Format of individual frame types

9.3.1 Control frames

9.3.1.8 BlockAck frame format

9.3.1.8.1 Overview

change the figure below as follows:

The BA Control field is defined in (#Ed)Figure 9-59 (BA Control field format).

	B0	B1 B4	B5	B6	B7	~~B7~~ — B8	B9
	Reserved	BA Type	Protected Control	Key ID	In-Device Error Flag	Reserved	No Memory Kept
Bits:	1	4	1	1	1	~~2~~1	1

	B10	B11	B12 B15
	Memory Configuration Tag	Management Ack	TID_INFO
Bits:	1	1	4

Figure 9-59—BA Control field format

Insert a new paragraph below as follows:

The GCR BlockAck frame is used in response to a GCR BlockAckReq frame, and the GLK-GCR BlockAck frame is used in response to a GLK-GCR BlockAckReq frame.

Copyright © 2025 IEEE. All rights reserved.
This is an unapproved IEEE Standards Draft, subject to change.

The In-Device Error Flag field indicates whether an in-device error has occurred during the reception of the PPDU that solicited a Multi-STA Block Ack frame. The In-Device Error Flag subfield is set to 1 to indicate that an in-device error occurred during the reception of the soliciting PPDU and is set to 0 to indicate that no in-device errors occurred during the reception of the soliciting PPDU or in case of no errors. The In-Device Error Flag field is reserved in other variants of the Block Ack frame.

9.3.1.8.6 Multi-STA BlockAck variant

9.3.1.8.6.1 General(#Ed)

please change subclause 9.3.1.8.6 as follows

The AID11 subfield carries the 11 LSBs of the AID of the non-AP STA for which the Per AID TID Info subfield is intended. The format of the Per AID TID Info subfield depends on the value of the AID11 subfield. If the Multi-STA BlockAck frame is sent to an AP, the AID11 subfield is set to 0. A value of 2045 in the AID11 subfield is used as an identifier for any unassociated STA. If the AID11 subfield is set to 2045, then the Ack Type subfield and TID subfield are set to 0 and 15, respectively. A value of 2008 in the AID11 subfield is used in a group addressed Multi-STA Block Ack frame to identify a Per AID TID Info field that carries feedback (see 37.19.2 (Dynamic (#7566)unavailability operation (DUO) mode)) that applies to all receiving UHR STAs.

NOTE 1—More than one Per AID TID Info subfield with the same value in the AID11 subfield but different values in the TID subfield can be present in the Multi-STA BlockAck frame.

If the AID11 subfield of the AID TID Info subfield is not set to 2045, and if the Ack Type subfield and TID subfield are not equal to 0 and 13 respectively, then the Per AID TID Info subfield has the format shown in Figure 9-66 (Acknowledgment Per AID TID Info subfield format if the AID11 subfield is not 2045, 2009, or 2047).

Change Figure 9-66 (Acknowledgment Per AID TID Info subfield format if the AID11 subfield is not 2045, 2009, or 2047) including its title as follows:

	AID TID Info	Block Ack Starting Sequence Control	Block Ack Bitmap
Octets:	2	0 or 2	0, 4, 8, 16, 32, 64, or 128

Figure 9-66—Acknowledgment Per AID TID Info subfield format ~~if the AID11 subfield is not 2045, 2009, or 2047~~

Editor's Note: REVmf added ", 2009, or 2047" after 2045, please check if the proposed changes apply to 2009 or 2047 or not.

If the AID11 subfield of the AID TID Info subfield is not 2045, and if the Ack Type subfield is equal to 0 and the TID subfield is equal to 13 then the Per AID TID Info subfield has the format shown in (#Ed)Figure 9-66a (Feedback Per AID TID Info subfield format).

	AID TID Info	Block Ack Starting Sequence Control	Feedback
Octets:	2	0 or 2	0, 4, 8, 16, 32, 64 or 128

Figure 9-66a—Feedback Per AID TID Info subfield format

Copyright © 2025 IEEE. All rights reserved.
This is an unapproved IEEE Standards Draft, subject to change.

If the AID11 subfield is not 2045, then the context and the presence of each optional subfield in a Per AID TID Info subfield in a Multi-STA BlockAck frame is defined in (#Ed)Table 9-43 (Context of the Per AID TID Info subfield and presence of optional subfields if the AID11 subfield is not 2045).

Table 9-43—Context of the Per AID TID Info subfield and presence of optional subfields if the AID11 subfield is not 2045

Ack Type subfield values	TID subfield values	Presence of Block Ack Starting Sequence Control subfield and either Block Ack Bitmap or Feedback subfields	Context of a Per AID TID Info subfield in a Multi-STA BlockAck frame
0	0–7	Present	Block acknowledgment context: Sent as an acknowledgment to QoS Data frames that solicit a BlockAck frame response or to a BlockAckReq frame.
1	0–7	Not present	Acknowledgment context: Sent as an acknowledgment to a QoS Data or QoS Null frame that solicits an Ack frame response.
0 ~~or 1~~	8–1~~3~~2	~~N/A~~Present	Reserved
1	8-12	Not present	Reserved
0	13	Present	Feedback context: Sent as feedback (e.g., of unavailability information, see 37.19.2 (Dynamic (#7566)unavailability operation (DUO) mode))
1	13	Not present	ICR context
0	14	~~N/A~~Present	Reserved
1	14	Not present	All ack context: Sent as an acknowledgment to an A-MPDU that contains an MPDU that solicits an immediate response and all MPDUs contained in the A-MPDU are received successfully.
0	15	~~N/A~~Present	Reserved
1	15	Not present	Management/PS-Poll frame acknowledgment context: Sent as an acknowledgment to a Management or PS-Poll frame.

NOTE 1—Additional rules for acknowledgment, block acknowledgment and the all ack context are defined in 26.4.2 (Acknowledgment context in a Multi-STA BlockAck frame) for a multi-TID A-MPDU.

NOTE 2—As HE STAs do not use HCCA (see 10.23.1), TID values from 8 to 15 are not used in QoS Data frames.

If the Ack Type subfield is 0, the Fragment Number subfield encoding indicates the length of the BlockAck bitmap subfield or the Feedback subfield as defined in Table 9-44 (Fragment Number subfield encoding for the Multi-STA BlockAck variant): (#Ed)

Copyright © 2025 IEEE. All rights reserved.
This is an unapproved IEEE Standards Draft, subject to change.

.

Table 9-44—Fragment Number subfield encoding for the Multi-STA BlockAck variant

Fragment Number subfield			Fragmentation level 3 (ON/OFF)	Block Ack Bitmap or Feedback subfield length (octets)	Maximum number of MSDUs/A-MSDUs that can be acknowledged (see NOTE 2)
B3	B2–B1	B0			
0	0	0	OFF	8	64
0	1	0		16	128
0	2	0		32	256
0	3	0		4	32
0	0	1	ON	8	16
0	1	1		16	32
0	2	1		32	64
0	3	1		4	8
1	0	0	OFF	64	512
1	1	0		128	1 024
1	2 and 3	0		Reserved	Reserved
1	Any	1		Reserved	Reserved

NOTE 1—A Multi-STA BlockAck frame with B0 of the Fragment Number subfield set to 1 cannot be sent to an HE STA, unless the HE Capabilities element received from the HE STA has the Dynamic Fragmentation Support subfield equal to 3 (see 26.3 (Fragmentation and defragmentation)).

NOTE 2—The column "Maximum number of MSDUs/A-MSDUs that can be acknowledged" is applicable for the Block Ack Bitmap subfield, and this column is N/A for the Feedback subfield.

NOTE 3—For UHR, Feedback subfield.

If a Per AID TID Info field has the Ack Type subfield equal to 0 and the TID subfield equal to 13 then:

— If the Multi-STA BlockAck frame is individually addressed to the UHR non-AP STA, the AID11 subfield of the Per AID TID Info subfield is set to the 11 LSBs of the AID of a UHR non-AP STA. If the Multi-STA BlockAck frame is individually addressed to an AP, the AID11 subfield is set to 0.

— If the Multi-STA BlockAck frame is transmitted by an AP and is group addressed, the AID11 subfield of the AID TID Info subfield is set to the AID of a UHR STA that is the intended receiver of the feedback information or to 2008 if the feedback information is intended for all addressed UHR STAs.

— The Block Ack Starting Sequence Control subfield in the Per AID TID Info subfield has the format shown in Figure 9-48 Block Ack Starting Sequence Control subfield format.

— The Feedback Type subfield indicates the type of feedback that is contained in the Feedback field and the encoding of the Feedback Type field is shown in Table 9-44a (Feedback Type subfield encoding(#Ed, 5880)).

— The feedback subfield length is defined in Table 9-40 (Fragment Number subfield encoding for the Multi-STA BlockAck variant) and a UHR STA indicates a feedback length for unavailability feedback or low-latency feedback equal to 4.

Copyright © 2025 IEEE. All rights reserved.
This is an unapproved IEEE Standards Draft, subject to change.

NOTE—While a UHR STA uses length 4, it is possible to in future amendments, other feedback length might be used and as such UHR STAs are expected to parse them correctly.

Table 9-44a—Feedback Type subfield encoding(#Ed, 5880)

Feedback Type	Feedback subfield type
0	Unavailability feedback
1	Low-latency feedback
2	Co-BF feedback
3	Co-TDMA feedback
4	Co-SR feedback
5-15	Reserved

More than one Per AID TID info field may be present in a Multi-STA BlockAck frame to report different types of feedback information.

	B0 B3	B4 B11	B12 B15
	Fragment Number	Reserved	Feedback Type
Bits:	4	8	4

Figure 9-66b—Block Ack Starting Sequence Control subfield format if the AID11 subfield is not 2045 and if the Ack Type subfield is equal to 0 and the TID subfield is equal to 13(#Ed)

Add a new subclause 9.3.1.8.6.2 (Co-TDMA feedback)

9.3.1.8.6.2 Co-TDMA feedback

(#10157, #5943, #7756, #8709, #9325, #9832, #10348)The Feedback Type field is set to 3 to carry Co-TDMA feedback(#10157) as described in 37.15.2.3 (Coordinated time division multiple access (Co-TDMA)).

If the Feedback Type field is set to 3, the Feedback field has the format defined in Figure 9-66c (Feedback field format if the Feedback Type field is set to 3 for Co-TDMA feedback(#Ed)).

	B0	B1 B31
	TXOP Sharing Solicited	Reserved
Bits:	1	31

Figure 9-66c— Feedback field format if the Feedback Type field is set to 3 for Co-TDMA feedback(#Ed)

Copyright © 2025 IEEE. All rights reserved.
This is an unapproved IEEE Standards Draft, subject to change.

The TXOP Sharing Solicited field of the Feedback field is set to 1 if the polled AP intends to receive a time allocation from the Co-TDMA coordinating AP during the current TXOP(#9880), otherwise it is set to 0.

Add a new subclause 9.3.1.8.6.3 (Unavailability feedback(#Ed))

9.3.1.8.6.3 Unavailability feedback(#Ed)

If the Feedback Type field is set to 0, the Feedback field has the format defined in Figure 9-66d (Feedback subfield format if the Feedback Type subfield is set to 0 for unavailability information(#Ed)). The Unavailability Target Start Time subfield indicates the value of TSF[15:6] at the time when the STA transmitting the Multi-STA BlockAck frame becomes unavailable (see 11.2.1 (General)). The Unavailability Target Start Time field is larger than the TSF value at the end of the PPDU that carries the feedback, except that this field is reserved (i.e., invalid and to be ignored by the recipient) if the Unavailability Duration subfield is equal to 0. The Unavailability Duration field indicates the duration in units of 64 µs over which the STA transmitting the Multi-STA BlockAck fram is unavailable, except that the value 0 indicates that the STA is available, and the value 1023 indicates that the STA is unavailable for an indefinite duration of time.

	B0 B9	B10 B19	B20 B31
	Unavailability Target Start Time	Unavailability Duration	Reserved
Bits:	10	10	12

Figure 9-66d—Feedback subfield format if the Feedback Type subfield is set to 0 for unavailability information(#Ed)

9.3.1.8.6.4 Low-latency feedback

If the Feedback Type subfield is 1, the feedback subfield has the format defined in Figure 9-66e (Feedback subfield format if the Feedback Type subfield is set to 1 for low-latency feedback(#Ed)) and includes low-latency feedback information. The size of the Feedback subfield is 32 bits for UHR STAs. The Low-Latency Indication subfield is set to 1 to indicate the presence of buffered low-latency traffic at the TXOP responder for delivery to the TXOP holder and is set to 0 to indicate that there is no buffered low-latency traffic from the TXOP responder for delivery to the TXOP holder (see 37.24.1 (General)).

	B0	B1	
	Low-Latency Indication	Peer-to-peer Low-Latency Indication	Reserved
Bits:	1	1	variable

Figure 9-66e—Feedback subfield format if the Feedback Type subfield is set to 1 for low-latency feedback(#Ed)

The Peer-to-peer Low-Latency Indication subfield is set to 1 to indicate the presence of buffered low-latency traffic at the TXOP responder for delivery to a STA other than the TXOP holder and is set to 0 otherwise.

The TXOP Responder shall not set both Low-Latency Indication and Peer-to-Peer Low-latency indication subfield to 1.

Copyright © 2025 IEEE. All rights reserved.
This is an unapproved IEEE Standards Draft, subject to change.

9.3.1.19 NDP Announcement frame format

The NDP Announcement frame has ~~four~~ six variants, the VHT NDP Announcement frame, the HE NDP Announcement frame, the Ranging NDP Announcement frame, the Sensing NDP Announcement frame, ~~and~~ the EHT NDP Announcement frame, and the UHR NDP Announcement frame. The ~~four~~ six formats are distinguished by 1) the setting of the NDP Announcement Variant subfield in the Sounding Dialog Token field, 2) the presence or absence of the STA Info field with AID11 subfield equal to 2045 and with B31 set to 1 (see Table 9-42b (NDP Announcement frame variant encoding) and Table 9-42ba (Ranging NDP Announcement frame and Sensing NDP Announcement frame encoding)), and 3) the presence or absence of the STA Info field with AID11 subfield equal to 2047. The STA Info field with AID11 subfield equal to 2045 is always present in a Sensing NDP Announcement frame and it is transmitted as the first STA Info field. The STA Info field with AID11 subfield equal to 2045 is not present in the Ranging NDP Announcement frame used for TB ranging measurement exchange but is present in the non-TB ranging measurement exchange. The STA Info field with AID11 subfield equal to 2047 is always present in a UHR NDP Announcement frame and it is transmitted as the first STA Info field.

Change Table 9-47 (Encoding of the AID11 subfield in an NDP Announcement frame) as follows:

The encoding of the AID11 subfield in the NDP Announcement frame is defined in (#Ed)Table 9-47 (Encoding of the AID11 subfield in an NDP Announcement frame).

Table 9-47—Encoding of the AID11 subfield in an NDP Announcement frame

AID subfield	Description	NDP Announcement frame variant applicability (see NOTE)					
		VHT	HE	EHT	Ranging	Sensing	UHR
0	STA Info field identifies the associated AP or mesh	Applicable					Not applicable
1–2006	If the NDP Announcement frame is not a Ranging or a Sensing variant, the STA Info field identifies an associated STA whose AID is equal to the value in the AID11 subfield. If the NDP Announcement frame is a Ranging or Sensing variant, the STA Info field identifies an unassociated STA or an associated STA whose RSID/USID/AID is equal to the value in the	Applicable					
2007		Applicable	Applicable (subject to 35.15.1 (Basic EHT BSS operation))	Not applicable	Applicable	Applicable	Not applicable
2008–2042	N/A	Not applicable					

Copyright © 2025 IEEE. All rights reserved.
This is an unapproved IEEE Standards Draft, subject to change.

Table 9-47—Encoding of the AID11 subfield in an NDP Announcement frame *(continued)*

AID subfield	Description	NDP Announcement frame variant applicability (see NOTE)					
		VHT	HE	EHT	Ranging	Sensing	UHR
2043	STA Info field contains a Sequence Authentication Code subfield	Not applicable	Not applicable	Not applicable	Applicable	Not applicable	Not applicable
2044	STA Info field contains a Partial TSF subfield	Not applicable	Not applicable	Not applicable	Applicable	Applicable	Not applicable
2045	For Ranging NDP Announcement frame, it contains I2R NDP TX Power and R2I RSSI target. For Sensing NDP Announcement frame, it contains the SI2SR NDP TX power and the Measurement Session ID, and it may contain the sensing responder to sensing initiator (SR2SI) NDP Target RSSI.	Not applicable	Not applicable	Not applicable	Applicable	Applicable	Not applicable
2046	N/A	Not applicable					
2047	STA Info field contains a Disallowed Subchannel Bitmap subfield If the NDP Announcement frame is a UHR variant, the STA Info field contains information for the responding AP.	Not applicable	Applicable	Not applicable	Not applicable	Not applicable	Applicable
NOTE—Not applicable means that the particular AID11 value is not used for that variant and is reserved.							

Change Table 9-48 (NDP Announcement frame variant encoding) as follows:

The NDP Announcement Variant subfield in the Sounding Dialog Token field identifies the NDP Announcement frame variant as defined in (#Ed)Table 9-48 (NDP Announcement frame variant encoding).

Copyright © 2025 IEEE. All rights reserved.
This is an unapproved IEEE Standards Draft, subject to change.

Table 9-48—NDP Announcement frame variant encoding

NDP Announcement Variant subfield	NDP Announcement frame variant
0	VHT NDP Announcement frame
1	Ranging NDP Announcement frame or Sensing NDP Announcement frame (see Table 9-42ba (Ranging NDP Announcement frame and Sensing NDP Announcement frame encoding))
2	HE NDP Announcement frame
3	EHT /UHR NDP Announcement frame

Change the second paragraph after Table 9-48 (NDP Announcement frame variant encoding) as follows:

The STA Info List field contains one or more, *n*, STA Info fields (see 9.3.1.19.2 (VHT NDP Announcement frame format), 9.3.1.19.3 (HE NDP Announcement frame format), ~~and~~ 9.3.1.19.5 (EHT NDP Announcement frame format)) and 9.3.1.19.6 (UHR NDP Announcement frame format).

Add the following section after 9.3.19.5 EHT NDP Announcement frame format:

9.3.1.19.6 UHR NDP Announcement frame format

The format of the UHR NDP Announcement frame is the same as the HE NDP Announcement frame shown in Figure 9-74f (HE NDP Announcement frame format).

NOTE—The UHR NDP Announcement frame is only used in the Cross-BSS UHR TB sequential NDP sounding sequence or the UHR TB joint NDP sounding sequence.

The Duration, RA, and TA fields are set as in a VHT NDP Announcement frame.

The NDP Announcement Variant subfield is set to 3 and the AID11 subfield of the first STA Info field is set to 2047 to identify the frame as a UHR NDP Announcement frame.

The Sounding Dialog Token Number subfield in the Sounding Dialog Token field contains a value selected by the beamformer to identify the UHR NDP Announcement frame.

The format of the first STA Info field in a UHR NDP Announcement frame is defined in (#Ed)Figure 9-98a (First STA Info field format in a UHR NDP Announcement frame).

	B0 B10	B11 B13	B14 B19	B20 B26	B27	B28 B30	B31
	AID11	NDPA Version	BSS Color	TXOP	Disambi guation	Bandwidth	Reserved
Bits:	11	3	6	7	1	3	1

Figure 9-98a—First STA Info field format in a UHR NDP Announcement frame

The AID11 subfield is set to 2047 as identifier of the first STA Info field in a UHR NDP Announcement frame to carry the information for the responding AP.

The NDPA Version subfield is set to 0 for UHR. The values from 1 to 7 are reserved.

Copyright © 2025 IEEE. All rights reserved.
This is an unapproved IEEE Standards Draft, subject to change.

The BSS Color subfield is set to the TXVECTOR parameter BSS_COLOR.

The TXOP subfield indicates the TXOP duration, and the definition is the same as the TXOP subfield in the U-SIG field of an EHT MU PPDU shown in Table 36-28 (U-SIG field of an EHT MU PPDU).

The Bandwidth subfield indicates the bandwidth of the following EHT sounding NDP and the definition is the same as the Bandwidth subfield in the U-SIG field of an EHT MU PPDU shown in Table 36-28 (U-SIG field of an EHT MU PPDU).

NOTE—Setting the Disambiguation subfield to 1 prevents a non-UHR VHT STA from incorrectly identifying its AID in the UHR NDP Announcement frame.

The format of the second STA Info field in a UHR NDP Announcement frame is defined in (#Ed)Figure 9-98b (Second STA Info field format in a UHR NDP Announcement frame).

	B0 B10	B11 B15	B16	B17	B18	B19	B20 B24
	AID11	Punctured Channel Information	Number of EHT-LTF Symbols	Starting Spatial Stream	Number of Spatial Streams	LTF+GI Size	Recommended MCS for CSI Feedback
Bits:	11	5	1	1	1	1	5

	B25 B26	B27	B28 B31
	Reserved	Disambiguation	Reserved
Bits:	2	1	4

Figure 9-98b—Second STA Info field format in a UHR NDP Announcement frame

The AID11 subfield contains an identifier of the responding AP expected to transmit an EHT sounding NDP following the UHR NDP Announcement frame.

The Punctured Channel Information subfield indicates the puncturing information of the following EHT sounding NDP transmission. See Table 36-30 (Definition of the Punctured Channel Information field in the U-SIG for an EHT MU PPDU using non-OFDMA transmissions) for the definition.

The Number Of EHT-LTF Symbols subfield indicates the number of EHT-LTF symbols of the following EHT sounding NDP transmission. A value of 0 indicates the number of EHT-LTF symbols is 4, a value of 1 indicates the number of EHT-LTF symbols is 8.

The Starting Spatial Streams subfield indicates the starting spatial stream of the responding AP in the following EHT sounding NDP transmission. A value of 0 indicates the starting spatial steam index is 1, a value of 1 indicates the starting spatial steam index is 5.

The Number of Spatial Streams subfield indicates the number of spatial streams of the responding AP in the following EHT sounding NDP transmission. A value of 0 indicates the number of spatial steams is 4, a value of 1 indicates the number of spatial steams is 8.

The GI+LTF Size subfield indicates the GI duration and EHT-LTF size and is set to 0 or 1 for 2× EHT-LTF + 0.8 µs GI or 2× EHT-LTF + 1.6 µs GI, respectively.

The Recommended MCS for CSI Feedback subfield indicates the MCS that may be used by the sounded STA to send the CSI report to the sender AP of the NDP in another BSS. The recommended MCS may be included in the BFRP Trigger frame sent by the responding AP of the NDPA in the Cross-BSS UHR TB

Copyright © 2025 IEEE. All rights reserved.
This is an unapproved IEEE Standards Draft, subject to change.

sequential NDP sounding sequence or the UHR TB joint NDP sounding sequence. The definition of Recommended MCS for CSI Feedback is the same as the MCS subfield in a UHR MU PPDU. The encoding of the Recommended MCS for CSI Feedback subfield is defined in 38.3.12 (UHR-SIG modulation and coding schemes (UHR-SIG-MCSs)) and additionally, value 31 indicates "No Recommendation". When multiple non-AP STAs associated with the responding AP are scheduled to feedback CSI reports, the Recommended MCS for CSI Feedback may be set to the lowest MCS among all the non-AP STAs associated with the responding AP.

NOTE—Setting the Disambiguation subfield to 1 prevents a non-UHR VHT STA from incorrectly identifying its AID in the UHR NDP Announcement frame.

Except the first and second STA Info fields, the format of the remaining STA Info field in a UHR NDP Announcement frame is defined in Figure 9-74n (STA Info field format in an EHT NDP Announcement frame).

9.3.1.22 Trigger frame format

9.3.1.22.1 General

Change the first paragraph as follows:

A Trigger frame that is not an MU-RTS Trigger frame <u>or a BSRP NTB Trigger frame (see 9.3.1.22.14 (BSRP Trigger frame format))</u> allocates resources for and solicits one or more TB PPDU transmissions. An MU-RTS Trigger frame allocates resources for one or more PPDUs that are not TB PPDUs (see 26.2.6 (MU-RTS Trigger/CTS frame exchange sequence procedure), 35.2.1.2 (Triggered TXOP sharing (TXS) procedure), and 35.2.2 (MU-RTS Trigger/CTS frame exchange procedure for EHT STAs))<u>, and a BSRP NTB Trigger frame solicits a Multi-STA BlockAck frame in a non-HT PPDU or a non-HT duplicate PPDU (see 37.22 (Use and requirements of initial Control frames))</u>. The Trigger frame also carries other information required by the responding STA to send an HE TB PPDU (see 26.5.2 (UL MU operation)), an EHT TB PPDU (see 35.5.2 (EHT UL MU operation))<u>, a UHR TB PPDU (see 37.4.2 (UHR UL MU operation)),</u> a non-HT PPDU or a non-HT duplicate PPDU (see 26.2.6 (MU-RTS Trigger/CTS frame exchange sequence procedure), 35.2.1.2 (Triggered TXOP sharing (TXS) procedure), and 35.2.2 (MU-RTS Trigger/CTS frame exchange procedure for EHT STAs) <u>and 37.22 (Use and requirements of initial Control frames))</u>, HE Ranging NDP (see 11.21.6.1.3 (Passive TB ranging overview)), or HE TB Ranging NDP (see 11.21.6.4.3 (TB ranging measurement exchange)) in response to the Trigger frame.

Change the fourth paragraph as follows:

The RA field is set as follows:

— For a Trigger frame that is not a GCR MU-BAR, NFRP or MU-RTS Trigger frame, and that has one User Info field that is not a Special User Info field (see 9.3.1.22.3 (Special User Info field)) <u>and is not a Feedback User Info field (see 9.3.1.22.7 (Feedback User Info field))</u> and the AID12 subfield of the User Info field contains the AID of a ~~non-AP~~ STA, the RA field is set to the address of that STA
  - <u>The STA is an AP when the Trigger frame is a BSRP Trigger frame that is addressed to an AP in which case the AID12 subfield of that User Info field</u>
    - <u>contains the value 0 if the Trigger frame is a BSRP NTB Trigger frame, which is sent by a non-AP STA to that AP, as defined in 37.22 (Use and requirements of initial Control frames))</u>
    - <u>contains the AP ID of an AP if the Trigger frame is a BSRP Trigger frame, which is sent by an AP to that AP, as defined in 37.22 (Use and requirements of initial Control frames))</u>
  - <u>The STA is a non-AP STA otherwise</u>

— For a Trigger frame that has at least one User Info field with the AID12 subfield that allocates an RA-RU, the RA field is set to the broadcast address

Copyright © 2025 IEEE. All rights reserved.
This is an unapproved IEEE Standards Draft, subject to change.

— For a Trigger frame that is not a GCR MU-BAR Trigger frame and that has more than one User Info field that is ~~not~~neither a Special User Info field (see 9.3.1.22.3 (Special User Info field)) nor a Feedback User Info field (see 9.3.1.22.7 (Feedback User Info field)), the RA field is set to the broadcast address
— For a Trigger frame that is an NFRP Trigger frame or MU-RTS Trigger frame, the RA field is set to the broadcast address
— For a Trigger frame that is a GCR MU-BAR Trigger frame, the RA field is set to the MAC address of the group for which reception status is being requested

Change the sixth and seventh paragraphs as follows:

The Common Info field, which has several variants, is defined in 9.3.1.22.2 (Common Info field).

There are three variants for the User Info field: ~~Special User Info field (see 9.3.1.22.3 (Special User Info field)),~~ HE variant User Info field (see 9.3.1.22.4 (HE variant User Info field)), ~~and~~ EHT variant User Info field (see 9.3.1.22.5 (EHT variant User Info field)) and UHR variant User Info field (see 9.3.1.22.6 (UHR variant User Info field)).

Change the nineth paragraphs, Table 9-46a and the following NOTEs as follows:

A User Info field that is addressed to a ~~non-AP~~ STA is one of ~~either~~ an HE variant, ~~or~~ an EHT variant or a UHR variant. The User Info field is addressed to a non-AP STA if the Trigger frame is sent by a non-UHR AP. The User Info field is addressed to a non-AP STA in all Trigger frames sent by a UHR AP except for a Trigger frame that is addressed to another AP in which case the User Info field is addressed to that AP (37.22 (Use and requirements of initial Control frames)). The User Info field is addressed to an AP if the Trigger frame is a BSRP NTB Trigger frame that is sent by a UHR non-AP STA to a UHR AP (37.22 (Use and requirements of initial Control frames)).

The User Info field is an HE variant addressed to an ~~non-AP~~ EHT STA if B39 of the User Info field is ~~set to~~equal to 0 and B54 of the Common Info field is ~~set to~~equal to 1 in the Trigger frame; otherwise, it is an EHT or UHR variant.The user info field is an EHT variant if the PHY Version Identifier subfield in the Special User Info field in the Trigger frame is equal to 0, and is a UHR variant if the PHY Version Identifier subfield in the Special User Info field in the Trigger frame is equal to 1. B39 of an HE variant User Info field is reserved for a non-EHT HE STA. B39 is set to 0 for an HE variant User Info field by an EHT AP, and is the PS160 subfield for an EHT or UHR variant User Info field. Table 9-53 (Valid combinations of B54 and B55 in the Common Info field, PHY Version Identifier field in the Special User Info field, B39 in the User Info field, and solicited TB PPDU format(Ed)) defines valid combinations of B54 and B55 in the Common Info

Copyright © 2025 IEEE. All rights reserved.
This is an unapproved IEEE Standards Draft, subject to change.

field, B39 in the User Info field, the presence of the Special User Info field in the Trigger frame, the variant of a User Info field, and the corresponding TB PPDU type.

Table 9-53—Valid combinations of B54 and B55 in the Common Info field, PHY Version Identifier field in the Special User Info field, B39 in the User Info field, and solicited TB PPDU format(Ed)

Common Info field B54	Common Info field B55	Presence of Special User Info field	PHY Version Identifier field in Special User Info field	User Info field B39	User Info field variant	TB PPDU type
1	1	No	Not applicable	0	HE variant	HE
0	0	Yes	0	0 or 1	EHT variant	EHT
0	0	Yes	1	0 or 1	UHR variant	UHR
~~0~~	~~0~~	~~Yes~~		~~1~~	~~EHT variant~~	~~EHT~~
1	0	Yes	0	1	EHT variant	EHT
1	0	Yes	0	0	HE variant	HE

NOTE 1—For example, if an EHT AP sends a Trigger frame that intends to solicit an EHT TB PPDU with a 4×996-tone RU from an EHT STA or if a UHR AP sends a Trigger frame that intends to solicit a UHR TB PPDU with a 4×996-tone RU from a UHR STA, then the AP sets B54 and B55 of the Common Info field to 0 and sets B39 to 1 in the User Info field addressed to the STA.

NOTE 2—Although the last two rows in Table 9-53 (Valid combinations of B54 and B55 in the Common Info field, PHY Version Identifier field in the Special User Info field, B39 in the User Info field, and solicited TB PPDU format(Ed)) are not used by an EHT AP (see 35.5.2.1 (General)), a non-AP EHT STA might respond to a Trigger frame with B54 in the Common Info field equal to 1 and with B55 in the Common Info field equal to 0 based on the two rows.

Insert the following paragraph to the end of 9.3.1.22.1 (General):

A non-EHT non-AP HE STA interprets the Common Info field as an HE variant Common Info field. A non-AP non-UHR EHT STA interprets the Common Info field as an HE variant Common Info field if B54 and B55 in the Common Info field are equal to 1; and interprets the Common Info field as an EHT variant Common Info field otherwise. A non-AP UHR STA interprets the Common Info field as an HE variant Common Info field if B54 and B55 in the Common Info field are equal to 1; and interprets the Common Info field as an EHT or UHR variant Common Info field according to the PHY Version Identifier subfield in the Special User Info field.

NOTE 3—The Special User Info field is always present if B55 in the Common Info field is equal to 0.

9.3.1.22.2 Common Info field

Change the first paragraph as follows

~~A non-EHT non-AP HE STA interprets the Common Info field as an HE variant Common Info field. A non-AP EHT STA interprets the Common Info field as an HE variant Common Info field if B54 and B55 in the Common Info field are equal to 1; and interprets the Common Info field as an EHT variant Common Info field otherwise.~~(#6772)

Copyright © 2025 IEEE. All rights reserved.
This is an unapproved IEEE Standards Draft, subject to change.

The HE variant Common Info field is defined in (#Ed)Figure 9-103 (HE variant Common Info field format).

	B0 B3	B4 B15	B16	B17	B18 B19	B20 B21	B22	B23 B25
	Trigger Type	UL Length	More TF	CS Required	UL BW	GI And HE-LTF Type/TXS Mode	MU-MIMO HE-LTF Mode	Number Of HE-LTF Symbols And Midamble Periodicity
Bits:	4	12	1	1	2	2	1	3

	B26	B27	B28 B33	B34 B35	B36	B37 B52	B53	B54 B62
	UL STBC	LDPC Extra Symbol Segment	AP Tx Power	Pre-FEC Padding Factor	PE Disambiguity	UL Spatial Reuse	Doppler	UL HE-SIG-A2 Reserved
Bits:	1	1	6	2	1	16	1	9

	B63	
	Reserved	Trigger Dependent Common Info
Bits:	1	variable

Figure 9-103—HE variant Common Info field format

The EHT variant Common Info field is defined in Figure 9-104 (EHT variant Common Info field format). (#Ed)

	B0 B3	B4 B15	B16	B17	B18 B19	B20 B21	B22	B23 B25
	Trigger Type	UL Length	More TF	CS Required	UL BW	GI And HE/ EHT-LTF Type/ TXS Mode	Reserved	Number Of HE/ EHT-LTF Symbols
Bits:	4	12	1	1	2	2	1	3

	B26	B27	B28 B33	B34 B35	B36	B37 B52	B53	B54
	Reserved	LDPC Extra Symbol Segment	AP Tx Power	Pre-FEC Padding Factor	PE Disambiguity	UL Spatial Reuse	Reserved	HE/EHT P160
Bits:	1	1	6	2	1	16	1	1

Copyright © 2025 IEEE. All rights reserved.
This is an unapproved IEEE Standards Draft, subject to change.

	B55	B56 ~~B62~~B59	B60	B61 B62	B63	
	Special User Info Field Flag	EHT Reserved	IFCS Absent Flag	EHT Reserved	Reserved	Trigger Dependent Common Info
Bits:	1	~~7~~4	1	2	1	variable

Figure 9-104—EHT variant Common Info field format

~~NOTE 1—For backward compatibility with HE variant Common Info field, an EHT AP sets B22, B26, B53, and B63 to 0 and sets B56–B62 to 1 in the EHT variant Common Info field.~~

Insert the following paragraph after Figure 9-104:

For backward compatibility with HE variant Common Info field, a non-UHR EHT AP sets B22, B26, B53, and B63 to 0 and sets each bit of B56-B62 of the EHT variant Common Info field that is reserved to 1.(#6360, 9839)

The UHR variant Common Info field is defined in Figure 9-104a (UHR variant Common Info field format). (#Ed)

	B0 B3	B4 B15	B16	B17	B18 B19	B20 B21	B22	B23 B25
	Trigger Type	UL Length	More TF	CS Required	UL BW	GI And UHR-LTF Type	Reserved	Number Of UHR-LTF Symbols
Bits:	4	12	1	1	2	2	1	3

	B26	B27	B28 B33	B34 B35	B36	B37 B52	B53	B54
	Reserved	LDPC Extra Symbol Segment	AP Tx Power	Pre-FEC Padding Factor	PE Disambiguity	UL Spatial Reuse	Reserved	UHR P160
Bits:	1	1	6	2	1	16	1	1

	B55	B56 B59	B60	B61 B62	B63	
	Special User Info Field Flag	DRU/RRU Indication	IFCS Absent Flag	UHR Reserved	Reserved	Trigger Dependent Common Info
Bits:	1	4	1	2	1	variable

Figure 9-104a—UHR variant Common Info field format

A UHR AP sets each reserved bit of B22, B26, B53, and B63 to 0 in the UHR variant Common Info field.(#9839)

Copyright © 2025 IEEE. All rights reserved.
This is an unapproved IEEE Standards Draft, subject to change.

Change the paragraph that begins with "The HE variant Common Info field, the EHT variant …" as follows:

The HE variant Common Info field, ~~and~~ the EHT variant Common Info field and the UHR variant Common Info field use the same encoding method for the Trigger Type, UL Length, More TF, CS Required, LDPC Extra Symbol Segment, AP TX Power, Pre-FEC Padding Factor, PE Disambiguity, and Trigger Dependent Common Info subfields.

Change the paragraph that begins with "The UL Length subfield of …" as follows:

The UL Length subfield of the Common Info field indicates the value of the L-SIG LENGTH field of the solicited ~~TB~~ PPDU(#4218, #4219). The UL Length subfield is set:

— As defined in 26.5.2.2.4 (Allowed settings of the Trigger frame fields and TRS Control subfield) if the solicited PPDU is an HE TB PPDU.

— As defined in 35.5.2.2.4 (Allowed settings of the Trigger frame fields and TRS Control subfield) if the solicited PPDU is an EHT TB PPDU.

— As defined in 37.4.2.2.3 (Allowed settings of the Trigger frame fields and TRS Control subfield) if the solicited PPDU is a UHR TB PPDU.

— As defined in 37.8.3 (BSRP NTB Trigger frame soliciting a non-HT (duplicate) PPDU) if the solicited PPDU is a non-HT (duplicate) PPDU.(#4219, #4220, #6359, #11429)

Change the paragraph that begins with "The CS Required subfield of …" as follows:

The CS Required subfield of the Common Info field is set to 1 to indicate that the STAs identified in the User Info fields are required to use ED to sense the medium and to consider the medium state and the NAV in determining whether or not to respond. The CS Required subfield is set to 0 to indicate that the STAs identified in the User Info fields are not required to consider the medium state or the NAV in determining whether or not to respond. See 26.5.2.3 (Non-AP STA behavior for UL MU operation), 26.5.2.5 (UL MU CS mechanism), 35.5.2.3 (Non-AP STA behavior for UL MU operation), ~~and~~ 35.5.2.4 (UL MU CS mechanism for EHT STAs), 37.4.2.3 (Non-AP STA behavior for UL MU operation), and 37.4.2.4 (UL MU CS mechanism for UHR STAs) for details.

Change the paragraph that begins with "The UL BW subfield of the EHT variant …" and two following paragraphs as follows:

The UL BW subfield of the EHT variant Common Info field along with the UL ~~BW~~Bandwidth Extension subfield of the Special User Info field indicates the bandwidth in the U-SIG field of the EHT TB PPDU. The UL BW subfield of the UHR variant Common Info field along with the UL Bandwidth Extension subfield of the Special User Info field indicates the bandwidth in the U-SIG field of the UHR TB PPDU. ~~and~~ Their interpretation is defined in Table 9-46g (UL Bandwidth Extension subfield encoding).

NOTE ~~2~~1—80+80 MHz is not defined for an EHT TB PPDU (see 36.1 (Introduction)) or a UHR TB PPDU (see 38.1 (Introduction)).

If the Trigger Type subfield (B0–B3) indicates an MU-RTS Trigger frame, then B20–B21 of the HE or EHT variant Common Info field is the TXS Mode subfield. Otherwise, B20–B21 of the HE variant Common Info field is the GI And HE-LTF Type subfield, ~~and~~ B20–B21 of the EHT variant Common Info field is the GI And HE/EHT-LTF Type subfield, and B20–B21 of the UHR variant Common Info field is the GI And UHR-LTF Type subfield. The GI And HE-LTF Type subfield, ~~or~~ GI And HE/EHT-LTF Type subfield or GI And UHR-LTF Type subfield of the Common Info field indicates the GI and HE/EHT/UHR-LTF type of the HE ~~or~~, EHT or UHR TB PPDU response. The GI And HE-LTF Type subfield or GI And HE/EHT-LTF Type subfield is present in a Trigger frame that solicits a TB PPDU response and its encoding is defined in Table 9-46d (GI And HE/EHT -LTF Type subfield encoding).

Copyright © 2025 IEEE. All rights reserved.
This is an unapproved IEEE Standards Draft, subject to change.

Insert the paragraph and a table after Table 9-56 GI And HE/EHT-LTF Type subfield encoding as follows:

The GI And UHR-LTF Type subfield is present in a UHR variant Common Info field of a Trigger frame that solicits a TB PPDU, a non-HT PPDU or a non-HT duplicate PPDU response and its encoding is defined in Table 9-56a (GI And UHR-LTF Type subfield encoding)(#Ed). In a UHR variant Trigger Frame, if B56-B59 are not all 1s, the GI And UHR-LTF Type subfield is set to 2. The GI And UHR-LTF Type subfield is not set to 3 in a Trigger frame that is not a BSRP Trigger frame. If the GI And UHR-LTF Type subfield is set to 3 in an individually addressed UHR variant BSRP Trigger frame, which is a UHR variant BSRP NTB Trigger frame, then the PPDU sent in response to that BSRP NTB Trigger frame is a non-HT (duplicate) PPDU that contains a Multi-STA BlockAck frame(#7769). Otherwise, the GI And UHR-LTF Type subfield is less than 3 in a BSRP Trigger frame, and the PPDU sent in response to the BSRP Trigger frame uses the TB PPDU format.

Table 9-56a—GI And UHR-LTF Type subfield encoding

GI And UHR-LTF Type subfield value	Description
0	1× UHR-LTF + 1.6 µs GI
1	2× UHR-LTF + 1.6 µs GI
2	4× UHR-LTF + 3.2 µs GI
3	The responding PPDU format to a BSRP NTB Trigger frame is non-HT (duplicate) PPDU format that contains a Multi-STA BlockAck

Change the following paragraph as follows:(#Ed)

The ~~encoding of~~ TXS Mode subfield in an HE or EHT variant Common Info field is ~~shown in Table 9-46n (TXS Mode subfield encoding). The TXS Mode subfield is~~ defined in 9.3.1.22.13 (MU-RTS Trigger frame format).

The MU-MIMO HE-LTF Mode subfield of the HE variant Common Info field indicates the HE-LTF mode for an HE TB PPDU that has an RU that spans the entire bandwidth and that is assigned to more than one non-AP STA (i.e., for UL MU-MIMO) when the GI And HE-LTF Type subfield of the HE variant Common Info field indicates either 2× HE-LTF + 1.6 µs GI or 4× HE-LTF + 3.2 µs GI, as defined in Table 9-46e (MU-MIMO HE-LTF Mode subfield encoding). Otherwise, this subfield is set to indicate HE single stream pilot HE-LTF mode. ~~B22 of the EHT variant Common Info field is reserved and is set to 0.~~

Change the paragraph that begins with "In an HE variant Common Info field with the Doppler …" as follows:

The Number Of HE-LTF Symbols And Midamble Periodicity field of an HE variant Common Info field, the Number Of HE/EHT-LTF Symbols field of an EHT variant Common Info field or the Number Of UHR-LTF Symbols field of an UHR variant Common Info field~~In an HE variant Common Info field with the Doppler subfield set to 0 or in an EHT variant Common Info field, the Number Of HE-LTF Symbols And Midamble Periodicity subfield of the HE variant Common Info field or, the Number Of HE/EHT-LTF Symbols subfield of the EHT variant Common Info field~~ (#11558)indicates the number of HE-LTF symbols present in the HE TB PPDU ~~or~~, EHT-LTF symbols present in the EHT TB PPDU, or UHR-LTF symbols present in the UHR TB PPDU, respectively, and is encoded as follows:

Copyright © 2025 IEEE. All rights reserved.
This is an unapproved IEEE Standards Draft, subject to change.

— 0 for 1 HE-LTF, ~~or~~ EHT-LTF or UHR-LTF symbol

— 1 for 2 HE-LTF, ~~or~~ EHT-LTF or UHR-LTF symbols

— 2 for 4 HE-LTF, ~~or~~ EHT-LTF or UHR-LTF symbols

— 3 for 6 HE-LTF, ~~or~~ EHT-LTF or UHR-LTF symbols

— 4 for 8 HE-LTF, ~~or~~ EHT-LTF or UHR-LTF symbols

— 5–7 ~~is~~are reserved

Change the paragraph that begins with "B26 of the EHT …" and a following paragraph as follows:

~~B26 of the EHT variant Common Info field is reserved and is set to 0.~~

The LDPC Extra Symbol Segment subfield of the Common Info field indicates the status of the LDPC extra symbol segment. It is set to 1 if the LDPC extra symbol segment is present in the solicited HE ~~or~~, EHT or UHR TB PPDUs and set to 0 otherwise.

Change the paragraph that begins with "The Pre-FEC Padding Factor..." and the following table as follows:

The Pre-FEC Padding Factor and PE Disambiguity subfields are defined in Table 9-58 (Pre-FEC Padding Factor and PE Disambiguity subfields) and have the same encoding as in their respective subfields in HE-SIG-A (see Table 27-21 (HE-SIG-A field of an HE MU PPDU)) ~~or~~, as in their respective subfields in EHT-SIG (see Table 36-33 (Common field for OFDMA transmission)), or as in their respective subfields in UHR-SIG (see Table 38-27 (Common field for OFDMA transmission)).

Table 9-58—Pre-FEC Padding Factor and PE Disambiguity subfields

Subfield	Description	Encoding
Pre-FEC Padding Factor	Indicates the pre-FEC padding factor	Set to 0 to indicate a pre-FEC padding factor of 4 Set to 1 to indicate a pre-FEC padding factor of 1 Set to 2 to indicate a pre-FEC padding factor of 2 Set to 3 to indicate a pre-FEC padding factor of 3
PE Disambiguity	Indicates PE disambiguity	When an HE TB PPDU is solicited, set~~Set~~ to 1 if the condition in Equation (27-118) is met; otherwise, it is set to 0 When an EHT TB PPDU is solicited, set to 1 if the condition in Equation (36-94) is met; otherwise, set to 0 When a UHR TB PPDU is solicited, set as defined in 38.3.17 (Packet extension)

Change the paragraph that begins with "When the Trigger frame solicits an EHT …" and four following paragraphs as follows:

When the Trigger frame solicits an EHT or UHR TB PPDU, each Spatial Reuse n subfield, $1 \le n \le 4$, of the EHT or UHR variant Common Info field is determined based on either the EHT/UHR Spatial Reuse 1 subfield or the EHT/UHR Spatial Reuse 2 subfield of the Special User Info field (see 9.3.1.22.3 (Special User Info field)) as described below.

Copyright © 2025 IEEE. All rights reserved.
This is an unapproved IEEE Standards Draft, subject to change.

When the Trigger frame solicits a 20 MHz EHT or UHR TB PPDU, each Spatial Reuse n subfield, $1 \le n \le 4$, of the Common Info field is set to the value of the EHT/UHR Spatial Reuse 1 subfield of the Special User Info field.

When the Trigger frame solicits a 40 MHz EHT or UHR TB PPDU, the Spatial Reuse 1 subfield and the Spatial Reuse 3 subfield of the Common Info field are set to the value of the EHT/UHR Spatial Reuse 1 subfield of the Special User Info field and the Spatial Reuse 2 subfield and the Spatial Reuse 4 subfield of the Common Info field are set to the value of the EHT/UHR Spatial Reuse 2 subfield of the Special User Info field.

When the Trigger frame solicits an 80 MHz EHT or UHR TB PPDU or a 160 MHz EHT or UHR TB PPDU, the Spatial Reuse 1 subfield and the Spatial Reuse 2 subfield of the Common Info field are set to the value of the EHT/UHR Spatial Reuse 1 subfield of the Special User Info field and the Spatial Reuse 3 subfield and the Spatial Reuse 4 subfield of the Common Info field are set to the value of the EHT/UHR Spatial Reuse 2 subfield of the Special User Info field.

When the Trigger frame solicits a 320 MHz EHT or UHR TB PPDU, each Spatial Reuse n subfield, $1 \le n \le 4$, of the Common Info field is set to the smaller of the values of the EHT/UHR Spatial Reuse 1 subfield and the EHT/UHR Spatial Reuse 2 subfield of the Special User Info field.

Change the paragraph that begins with "B53 of the EHT …" as follows:

~~B53 of the EHT variant Common Info field is reserved and is set to 0.~~

Change the paragraph that begins with "The UL HE-SIG-A2 …" as follows:

The UL HE-SIG-A2 Reserved subfield of the HE variant Common Info field carries the value to be included in the Reserved field in the HE-SIG-A2 subfield of the solicited HE TB PPDUs. A non-EHT HE AP sets the UL HE-SIG-A2 Reserved subfield of the HE variant Common Info field to all 1s. In an HE variant Common Info field, a UHR AP uses B60 as the IFCS Absent Flag subfield.

Change the paragraph that begins with "An HE/EHT P160 subfield …" and a following paragraph as follows:

~~An~~The HE/EHT P160 subfield of the EHT variant Common Info field is set to 0 to indicate that the solicited TB PPDU in the primary 160 MHz is an EHT TB PPDU. The HE/EHT P160 subfield of the EHT variant Common Info field is set to 1 to indicate that the solicited TB PPDU in the primary 160 MHz is an HE TB PPDU. ~~An~~The UHR P160 subfield of the UHR variant Common Info field is set to 0 to indicate that the solicited TB PPDU in the primary 160 MHz is a UHR TB PPDU. ~~An HE/EHT P160 subfield of the EHT variant Common Info field is set to 1 to indicate that the solicited TB PPDU in the primary 160 MHz is an HE TB PPDU.~~(#11560)

The Special User Info Field Flag subfield is always set to 0 in an EHT or UHR variant Common Info field, indicating that a Special User Info field is included in the Trigger frame that contains the EHT or UHR variant Common Info field.

Insert the following paragraphs and figure before the last paragraph that begins with "The Trigger Dependent Common Info subfield …":

The DRU/RRU Indication subfield of the UHR variant Common Info field indicates, for each 80 MHz frequency subblock, whether distributed-tone RU (DRU) or regular RU (RRU) transmission is solicited. The format of the DRU/RRU Indication subfield is defined in (#Ed)Figure 9-105a (DRU/RRU Indication subfield format). If the bandwidth for the UHR TB PPDU is 20 MHz, 40 MHz or 80 MHz, then B1–B3 in the

Copyright © 2025 IEEE. All rights reserved.
This is an unapproved IEEE Standards Draft, subject to change.

DRU/RRU Indication subfield are reserved and are set to all 1s. If the bandwidth for the UHR TB PPDU is 160 MHz, then B2–B3 in the DRU/RRU Indication subfield are reserved and are set to all 1s. To solicit a UHR TB PPDU using DRU transmission in an 80 MHz frequency subblock within the bandwidth for the UHR TB PPDU, the corresponding bit in the DRU/RRU Indication subfield is set to 0. Otherwise, it is set to 1.

	B0	B1	B2	B3
	DRU/RRU Indication for the lowest 80 MHz frequency subblock	DRU/RRU Indication for the second lowest 80 MHz frequency subblock	DRU/RRU Indication for the second highest 80 MHz frequency subblock	DRU/RRU Indication for the highest 80 MHz frequency subblock
Bits:	1	1	1	1

Figure 9-105a—DRU/RRU Indication subfield format

The IFCS Absent Flag subfield of the Common Info field indicates whether the intermediate FCS (IFCS) is present or not in the Trigger frame.

— Set to 0 to indicate the IFCS is present.

— Set to 1 to indicate the IFCS is not present.

NOTE 2—A non-UHR STA and a(#6071, 9637, 7172, 9426, 5906, 8212, 11857) UHR STA that does not support reception of the IFCS ignores the value of B60 in the Common Info field.(#Ed)

9.3.1.22.3 Special User Info field

Change the second and third paragraphs as follows:

The Special User Info field is identified by an AID12 value of 2007 and is optionally present in a Trigger frame that is generated by an EHT AP.

NOTE 1— An EHT AP does not use the value 2007 as an AID for any STA associated to it (see 35.15.1 (Basic EHT BSS operation) and 37.10 (UHR BSS operation)).

NOTE 2—The length of the Special User Info field is equal to the length of the other User Info fields present in the same Trigger frame, except when the Trigger frame is an MU-BAR Trigger frame (see 9.3.1.22.12 (MU-BAR Trigger frame format)).

NOTE 3—The Special User Info field is not included in the Trigger frame unless the Trigger frame includes one or more EHT variant User Info fields (see 35.5.2.1 (General)) or one or more UHR variant User Info fields (see 37.4.2.1 (General)), or the Trigger frame is a BSRP NTB Trigger frame (see 9.3.1.22.14 (BSRP Trigger frame format))(#11561).

NOTE 4—The format of the TB PPDU sent in response to a Trigger frame and the (#9842)presence of the Special User Info field in the Trigger frame are shown in Table 9-53 (Valid combinations of B54 and B55 in the Common Info field, PHY Version Identifier field in the Special User Info field, B39 in the User Info field, and solicited TB PPDU format(Ed)).

Change the sixth paragraph as follows:

The Special User Info field, if present, is located immediately after the Common Info field of the Trigger frame and carries information for the U-SIG field of a solicited EHT or UHR TB PPDU if the Trigger frame is neither an MU-RTS Trigger frame nor a BSRP NTB Trigger frame, and carries information for the solicited non-HT (duplicate) PPDU if the Trigger frame is an MU-RTS Trigger frame (see 9.3.1.22.13 (MU-RTS Trigger frame format) or a BSRP NTB Trigger frame (see 9.3.1.22.14 (BSRP Trigger frame format).

Copyright © 2025 IEEE. All rights reserved.
This is an unapproved IEEE Standards Draft, subject to change.

Change Figure 9-108 and a following paragraph as follows:

	B0 B11	B12 B14	B15 B16	B17 B20	B21 B24	B25 B36
	AID12	PHY Version Identifier	UL Bandwidth Extension	EHT/UHR Spatial Reuse 1	EHT/UHR Spatial Reuse 2	U-SIG Disregard And Validate
Bits:	12	3	2	4	4	12

	B37	B~~37~~38 B39	
	NPCA Primary Channel Indication	Reserved	Trigger Dependent User Info
	1	~~3~~2	variable

Figure 9-108—Special User Info field format(#Ed)

The PHY Version Identifier subfield indicates the variant of a Common Info field that is not an HE variant. If the Trigger frame is neither an MU-RTS Trigger frame nor a BSRP NTB Trigger frame, the PHY Version Identifier also indicates (#4216, #7587)the PHY version of the solicited TB PPDU that is not an HE TB PPDU. The PHY Version Identifier subfield is set to 0 for EHT and is set to 1 for UHR. The values from ~~1~~2 to 7 are reserved.

The UL Bandwidth Extension subfield, together with the UL BW subfield in the Common Info field, indicates the bandwidth of the solicited TB PPDU (i.e., the bandwidth in the U-SIG field of the EHT TB PPDU or UHR TB PPDU) if the Trigger frame is neither an MU-RTS Trigger frame (see 9.3.1.22.13 (MU-RTS Trigger frame format)), nor a BSRP NTB Trigger frame (see 9.3.1.22.14 (BSRP Trigger frame format)), or the bandwidth of the solicited non-HT PPDU or non-HT duplicate PPDU if the Trigger frame is a BSRP NTB Trigger frame(#4217, #5268, #7097, #10268, #11562, #11650). The UL Bandwidth Extension subfield is defined in Table 9-59 (UL Bandwidth Extension subfield encoding(#Ed)).

The NPCA Primary Channel Indication subfield indicates whether the Trigger frame is transmitted on the NPCA primary channel. If the PHY Version Identifier subfield is set to 1, the NPCA Primary Channel Indication field is set to 1 if the Trigger frame is transmitted by an NPCA STA that has switched to the NPCA primary channel (see 37.18 (Non-primary channel access (NPCA))) and is set to 0 otherwise. If the PHY Version Identifier subfield is set to 0, the NPCA Primary Channel Indication subfield is reserved.

Copyright © 2025 IEEE. All rights reserved.
This is an unapproved IEEE Standards Draft, subject to change.

Change Table 9-59 (UL Bandwidth Extension subfield encoding(#Ed)) and two following paragraphs as follows:

Table 9-59—UL Bandwidth Extension subfield encoding(#Ed)

UL BW	Bandwidth for HE TB PPDU (MHz)	UL Bandwidth Extension	Bandwidth for EHT/UHR TB PPDU or non-HT (duplicate) PPDU (MHz)
0	20	0	20
0	20	1	Reserved
0	20	2	Reserved
0	20	3	Reserved
1	40	0	40
1	40	1	Reserved
1	40	2	Reserved
1	40	3	Reserved
2	80	0	80
2	80	1	Reserved
2	80	2	Reserved
2	80	3	Reserved
3	160	0	Reserved
3	160	1	160
3	160	2	320 (for 320 MHz-1 defined in 36.3.24.2 (Channelization for 320 MHz channel))
3	160	3	320 (for 320 MHz-2 defined in 36.3.24.2 (Channelization for 320 MHz channel))

The EHT/UHR Spatial Reuse *n* subfield, $1 \le n \le 2$, carries the values to be included in the corresponding Spatial Reuse *n* subfield in the U-SIG field of the EHT or UHR TB PPDU. The values for the EHT/UHR Spatial Reuse *n* subfields are defined in Table 36-31 (U-SIG field of an EHT TB PPDU) and Table 38-25 (U-SIG field of a UHR TB PPDU).

The U-SIG Disregard And Validate subfield carries the values to be included in the Disregard and Validate subfields of the U-SIG field of the solicited EHT or UHR TB PPDUs. The U-SIG Disregard And Validate subfield is further divided into three subfields as shown in Figure 9-109 (U-SIG Disregard And Validate subfield format)(#Ed). The mapping from the subfields in the U-SIG Disregard And Validate subfield to subfields in the U-SIG field for an EHT or UHR TB PPDU is defined in Table 9-60 (Mapping from Special User Info field to U-SIG field in the EHT or UHR TB PPDU(#11563)). The Validate In U-SIG-2 subfield is set to 1. The values of the Disregard In U-SIG-1 and Disregard In U-SIG-2 subfields are defined in 35.5.2.2.4 (**Allowed settings of the Trigger frame fields and TRS Control subfield)**(#6774).

Copyright © 2025 IEEE. All rights reserved.
This is an unapproved IEEE Standards Draft, subject to change.

Change the title of Table 9-60 from "Mapping from Special User Info field to U-SIG-1 and U-SIG-2 fields in the EHT or UHR TB PPDU" to "Mapping from Special User Info field to U-SIG field in the EHT or UHR TB PPDU"(#11563)

Table 9-60—Mapping from Special User Info field to U-SIG field in the EHT or UHR TB PPDU(#11563)

Subfields in the Special User Info field	Corresponding subfield of U-SIG field in elicited EHT or UHR TB PPDU (see 35.5.2.3.2 (TXVECTOR parameters for EHT TB PPDU response to Trigger frame) and 37.4.2.3.2 (TXVECTOR parameters for UHR TB PPDU response to Trigger frame)
Disregard In U-SIG-1 (B0–B5)	Disregard subfield of U-SIG-1 ~~field~~ (B20–B25 of U-SIG-1 ~~field~~)(#11563)
Validate In U-SIG-2 (B6)	Validate subfield of U-SIG-2 ~~field~~ (B2 of U-SIG-2 ~~field~~)(#11563)
Disregard In U-SIG-2 (B7–B11)	Disregard subfield of U-SIG-2 ~~field~~ (B11–B15 of U-SIG-2 ~~field~~)(#11563)

9.3.1.22.4 HE variant User Info field

Change the first paragraph as follows:

The HE variant User Info field is defined in (#Ed)Figure 9-110 (HE variant User Info field format) for all Trigger frame variants except the NFRP Trigger frame, the MU-RTS TXS Trigger frame, ~~and~~ the Ranging Trigger frame, and the BSRP NTB Trigger frame, which are defined in 9.3.1.22.17 (NFRP Trigger frame format), 9.3.1.22.13 (MU-RTS Trigger frame format), and 9.3.1.22.18 (Ranging Trigger frame format), and 9.3.1.22.14 (BSRP Trigger frame format), respectively.

The AID12 subfield in the User Info field is encoded as defined in (#Ed)Table 9-61 (AID12 subfield encoding):

Table 9-61—AID12 subfield encoding

AID12 subfield	Description	Trigger frame variant applicability (see NOTE1)		
		HE	EHT	UHR
0	User Info field allocates one or more contiguous RA-RUs for associated STAs in an HE variant Trigger frame. User Info field is in a UHR variant BSRP NTB Trigger frame sent from a non-AP STA to an AP.(#4089)	Applicable	Not applicable	Applicable

Copyright © 2025 IEEE. All rights reserved.
This is an unapproved IEEE Standards Draft, subject to change.

Table 9-61—AID12 subfield encoding *(continued)*

AID12 subfield	Description	Trigger frame variant applicability (see NOTE1)		
		HE	EHT	UHR
1–~~2007~~2006	User Info field is addressed to an associated STA whose AID is equal to the value in the AID12 subfield in an HE variant or an EHT variant Trigger frame.(#4089) User Info field is addressed to an associated STA whose AID is equal to the value in the AID12 subfield in a UHR variant Trigger frame, or in a UHR variant BSRP Trigger frame sent from an AP to another AP whose AID is equal to the value in the AID12 subfield.(#4089)	Applicable	Applicable	Applicable
2007	User Info field is addressed to an associated STA whose AID is equal to the value in the AID12 subfield in an HE variant Trigger frame sent by a non-EHT HE AP. User Info field is a Special User Info field if the Special User Info Field Flag field in the EHT or UHR variant Common Info field is 0.	Applicable	Applicable	Applicable
2008	User Info field contains feedback (see 9.3.1.22.7 (Feedback User Info field)).(#4089)	Not applicable	Not applicable	Applicable
2009-2010	N/A	Not applicable	Not applicable	Not applicable
2011	User Info field contains a portion of an intermediate FCS (IFCS) (see 9.3.1.22.8 (Intermediate FCS)).(#4089)	Applicable	Applicable	Applicable
2012	User Info field contains an IFCS(#10269, 11564) Location Indication field (see 9.3.1.22.9 (IFCS Location Indication field)).(#4089)	Applicable	Applicable	Applicable
2~~008~~13–2044	~~Reserved~~N/A	Not applicable	Not applicable	Not applicable
2045	User Info field allocates one or more contiguous RA-RUs for unassociated STAs.(#4089)	Applicable	Not applicable	Not applicable
2046	Unallocated RU.(#4089)	Applicable	Applicable	Applicable
2047–4094	~~Reserved~~N/A	Not applicable	Not applicable	Not applicable
4095	Disallowed in a User Info field as it indicates the start of the Padding field.(#4089)	Applicable	Applicable	Applicable

Copyright © 2025 IEEE. All rights reserved.
This is an unapproved IEEE Standards Draft, subject to change.

Table 9-61—AID12 subfield encoding *(continued)*

AID12 subfield	Description	Trigger frame variant applicability (see NOTE1)		
		HE	EHT	UHR
NOTE 1— Not applicable means that the particular AID12 value is not used for that variant and is reserved.(#11565) NOTE 2—The Padding field, if present in a Trigger frame, is a field with all padding bits set to 1. The Padding field, if present, has a length of at least two octets and is located between the User Info List field and the FCS field (see 9.3.1.22.1 (General)).				

NOTE—The value 2007 in the AID12 subfield can be used for an HE variant User Info field if the Trigger frame is generated by a non-EHT HE AP, whereas the value 2007 in the AID12 subfield cannot be used for an HE variant User Info field if the Trigger frame is generated by an EHT AP (see 9.3.1.22.3 (Special User Info field) for details).

9.3.1.22.5 EHT variant User Info field

Insert a new child subclause of 9.3.1.22 as follows:

9.3.1.22.6 UHR variant User Info field

Insert the following paragraphs, figures, and tables:

The UHR variant User Info field is defined in (#Ed)Figure 9-114a (UHR variant User Info field format) for all Trigger frame variants except the NFRP Trigger frame, and the MU-RTS (#8020)Trigger frame(#7588).

	B0 B11	B12 B19	B20	B21 B25	B26	B27 B31	B32 B38	B39	
	AID12	RU Allocation	UL FEC Coding Type	UL UHR-MCS	2xLD PC	RRU SS Allocation/ DRU SS Allocation And DBW	UL Target Receive Power	PS160	Trigger Dependent User Info
Bits:	12	8	1	5	1	5	7	1	variable

Figure 9-114a—UHR variant User Info field format

The AID12 subfield of a UHR variant User Info field is encoded as defined in (#Ed)Figure 9-61 (AID12 subfield encoding) and has a value between 0 and 2006, where value 0 is only allowed in a UHR variant BSRP NTB Trigger frame sent by a non-AP STA to an AP(#7588).

The RU Allocation subfield in a UHR variant User Info field in a Trigger frame that is not an MU-RTS Trigger frame, along with the UL BW subfield and DRU/RRU Indication subfield in the Common Info field, the UL BW Extension subfield and NPCA Primary Channel Indication subfield in the Special User Info field, the PS160 subfield in the UHR variant User Info field, and the DRU Distribution BW field in the UHR variant User Info field if the assigned RU is a DRU, identifies the size and location of an RU, DRU(#5108) or MRU.

Copyright © 2025 IEEE. All rights reserved.
This is an unapproved IEEE Standards Draft, subject to change.

If the NPCA Primary Channel Indication field in the Special User Info field is set to 0, the setting of B0 of the RU Allocation field and the PS160 field and the interpretation of the primary and secondary channel configuration in Table 9-65 (Lookup table for X1 and N) is based on the primary and secondary channel configuration without NPCA. If the NPCA Primary Channel Indication field in the Special User Info field is set to 1, the setting of B0 of the RU Allocation field and the PS160 field and the interpretation of the primary and secondary channel configuration in Table 9-65 (Lookup table for X1 and N) is based on the NPCA primary and secondary channel configuration where the NPCA primary 80 MHz channel and NPCA primary 160 MHz channel, respectively, are the 80 MHz channel and 160 MHz channel that contain the NPCA primary channel.(#7623, #11566)

If the RU Allocation subfield of the User Info field indicates the assigned RU is located in an 80 MHz frequency subblock where the corresponding bit in the DRU/RRU Indication subfield in the UHR variant Common Info field is set to 1, or located in more than one 80 MHz frequency subblock where the corresponding bits in the DRU/RRU Indication subfield in the UHR variant Common Info field are set to all 1s, the assigned RU is an RRU or an MRU.

— The mapping of B7–B1 of the RU Allocation subfield along with the settings of B0 of the RU Allocation subfield and the PS160 subfield in the UHR variant User Info field is defined in Table 9-46l (Encoding of the PS160 and RU Allocation subfields in a EHT variant User Info field), where the bandwidth is obtained from the combination of the UL BW subfield and UL Bandwidth Extension subfields, and X1 and N are obtained from Table 9-46m (Lookup table for X1 and N). See 9.3.1.22.5 (EHT variant User Info field).

— The values of the PS160 subfield and B0 of the RU Allocation subfield indicate the 80 MHz frequency subblock in which the RU or MRU is located for each 26-tone RU, 52-tone RU, 106-tone RU, 242-tone RU, (#5271)484-tone RU, 996-tone RU, 52+26-tone MRU, 106+26-tone MRU, and 484+242-tone MRU(#5272). The 80 MHz frequency subblock is derived based on the corresponding PHY RU or MRU index column in Table 9-46l (Encoding of the PS160 and RU Allocation subfields in an EHT variant User Info field).

— The value of the PS160 subfield indicates the 160 MHz segment in which the RU or MRU is located for 2×996-tone RU, 996+484-tone MRU, and 996+484+242-tone MRU.

— For each 4×996-tone RU, 2×996+484-tone MRU, 3×996-tone MRU, and 3×996+484-tone MRU, the RU or MRU index is the same as that of the PHY RU or MRU index for the 320 MHz channel(#8520).

— If the bandwidth indicates 20 MHz, the mapping of the PHY RU index to the RU is defined in Table 27-8 (Data and pilot subcarrier indices for RUs in a 20 MHz HE PPDU and in a non-OFDMA 20 MHz HE PPDU).

— If the bandwidth indicates 40 MHz, the mapping of the PHY RU index to the RU is defined in Table 27-9 (Data and pilot subcarrier indices for RUs in a 40 MHz HE PPDU and in a non-OFDMA 40 MHz HE PPDU).

— If the bandwidth indicates 80 MHz, the mapping of the PHY RU index to the RU is defined in Table 36-5 (Data and pilot subcarrier indices for RUs in an 80 MHz EHT PPDU).

— If the bandwidth indicates 160 MHz, the mapping of the PHY RU index to the RU is defined in Table 36-6 (Data and pilot subcarrier indices for RUs in a 160 MHz EHT PPDU).

— If the bandwidth indicates 320 MHz, the mapping of the PHY RU index to the RU is defined in Table 36-7 (Data and pilot subcarrier indices for RUs in a 320 MHz EHT PPDU).

— If the bandwidth indicates 20 MHz, the mapping of the PHY MRU index to the MRU is defined in Table 36-8 (Indices for small size MRUs in an OFDMA 20 MHz EHT PPDU).

— If the bandwidth indicates 40 MHz, the mapping of the PHY MRU index to the MRU is defined in Table 36-9 (Indices for small size MRUs in an OFDMA 40 MHz EHT PPDU).

— If the bandwidth indicates 80 MHz, the mapping of the PHY MRU index to the MRU is defined in Table 36-10 (Indices for small size MRUs in an OFDMA 80 MHz EHT PPDU) and Table 36-13

Copyright © 2025 IEEE. All rights reserved.
This is an unapproved IEEE Standards Draft, subject to change.

(Indices for large size MRUs in an OFDMA 80 MHz EHT PPDU and in a non-OFDMA 80 MHz EHT PPDU).

— If the bandwidth indicates 160 MHz, the mapping of the PHY MRU index to the MRU is defined in Table 36-11 (Indices for small size MRUs in an OFDMA 160 MHz EHT PPDU) and Table 36-14 (Indices for large size MRUs in an OFDMA 160 MHz EHT PPDU and in a non-OFDMA 160 MHz EHT PPDU).

— If the bandwidth indicates 320 MHz, the mapping of the PHY MRU index to the MRU is defined in Table 36-12 (Indices for small size MRUs in an OFDMA 320 MHz EHT PPDU) and Table 36-15 (Indices for large size MRUs in an OFDMA 320 MHz EHT PPDU and in a non-OFDMA 320 MHz EHT PPDU).

If the RU Allocation subfield of the User Info field indicates the assigned RU is located in an 80 MHz frequency subblock where the corresponding bit in the DRU/RRU Indication subfield in the UHR variant Common Info field is set to 0, the assigned RU is a DRU.

— The mapping of B7–B1 of the RU Allocation subfield along with the settings of B0 of the RU Allocation subfield and the PS160 subfield in the UHR variant User Info field is defined in Table 9-65a (Encoding of the PS160 and RU Allocation subfields in a UHR variant User Info field for DBW 20 MHz) for DBW 20 MHz, Table 9-65b (Encoding of the PS160 and RU Allocation subfields in a UHR variant User Info field for DBW 40 MHz) for DBW 40 MHz, Table 9-65c (Encoding of the PS160 and RU Allocation subfields in a UHR variant User Info field for DBW 60 MHz) for DBW 60 MHz, and Table 9-65d (Encoding of the PS160 and RU Allocation subfields in a UHR variant User Info field for DBW 80 MHz) for DBW 80 MHz, where the bandwidth is obtained from the combination of the UL BW subfield and UL Bandwidth Extension subfields, and *N* are obtained from Table 9-46m (Lookup table for X1 and N). The values of the PS160 subfield and B0 of the RU Allocation subfield indicate the 80 MHz frequency subblock in which the DRU is located for each 26-tone RU, 52-tone RU, 106-tone RU, 242-tone RU and 484-tone RU. The 80 MHz frequency subblock is derived based on the corresponding PHY RU or MRU index column in Table 9-46l (Encoding of the PS160 and RU Allocation subfields in an EHT variant User Info field).

— If the bandwidth indicates 20 MHz, the mapping of the PHY DRU index to the DRU is defined in Table 38-6 (Data and pilot subcarrier indices for distributed RUs (DRU) in a 20 MHz UHR TB PPDU).

— If the bandwidth indicates 40 MHz, the mapping of the PHY DRU index to the DRU is defined in Table 38-7 (Data and pilot subcarrier indices for distributed RUs (DRU) in a 40 MHz UHR TB PPDU).

— If the bandwidth indicates 80 MHz and the DRU Distribution BW subfield indicates 60 MHz DBW(#9135), the mapping of the PHY DRU index to the DRU is in Table 38-8 (Data and pilot subcarrier indices for distributed RUs (DRU) in a 60 MHz UHR TB PPDU).

— If the bandwidth indicates 80 MHz and the DRU Distribution BW subfield indicates 80 MHz DBW, the mapping of the PHY DRU index to the DRU is in Table 38-9 (Data and pilot subcarrier indices for distributed RUs (DRU) in an 80 MHz UHR TB PPDU with 80 MHz DBW).

— If the bandwidth indicates 80 MHz, 160 MHz or 320 MHz and the DRU Distribution BW subfield indicates 20 MHz DBW, the mapping of the PHY DRU index to the DRU is defined in 38.3.2.2 (Tone plan for DRUs) by using Table 38-6 (Data and pilot subcarrier indices for distributed RUs (DRU) in a 20 MHz UHR TB PPDU) and Equation (38-1) through the frequency shift in Table 38-10 (Constant shift value Kshift for DRU on a frequency subblock of wide bandwidth).

— If the bandwidth indicates 80 MHz, 160 MHz or 320 MHz and the DRU Distribution BW subfield indicates 40 MHz DBW, the mapping of the PHY DRU index to the DRU is defined in 38.3.2.2 (Tone plan for DRUs) by using Table 38-7 (Data and pilot subcarrier indices for distributed RUs (DRU) in a 40 MHz UHR TB PPDU) and Equation (38-1) through the frequency shift in Table 38-10 (Constant shift value Kshift for DRU on a frequency subblock of wide bandwidth).

Copyright © 2025 IEEE. All rights reserved.
This is an unapproved IEEE Standards Draft, subject to change.

— If the bandwidth indicates 80 MHz, 160 MHz or 320 MHz and the DRU Distribution BW subfield indicates 60 MHz DBW, the mapping of the PHY DRU index to the DRU is defined in 38.3.2.2 (Tone plan for DRUs) by using Table 38-8 (Data and pilot subcarrier indices for distributed RUs (DRU) in a 60 MHz UHR TB PPDU) and Equation (38-1) through the frequency shift in Table 38-10 (Constant shift value Kshift for DRU on a frequency subblock of wide bandwidth).

— If the bandwidth indicates 160 MHz or 320 MHz and the DRU Distribution BW subfield indicates 80 MHz DBW, the mapping of the PHY DRU index to the DRU is defined in 38.3.2.2 (Tone plan for DRUs) by using Table 38-9 (Data and pilot subcarrier indices for distributed RUs (DRU) in an 80 MHz UHR TB PPDU with 80 MHz DBW) and Equation (38-1) through the frequency shift in Table 38-10 (Constant shift value Kshift for DRU on a frequency subblock of wide bandwidth).

Copyright © 2025 IEEE. All rights reserved.
This is an unapproved IEEE Standards Draft, subject to change.

Table 9-65a—Encoding of the PS160 and RU Allocation subfields in a UHR variant User Info field for DBW 20 MHz

PS160 subfield	B0 of the RU Allocation subfield	B7–B1 of the RU Allocation subfield	Bandwidth (MHz)	DRU size	DRU index (corresponding to Table 38-6 for DBW20)	20 MHz frequency subblock index (l)	PHY DRU index
0–3: 80 MHz frequency sub-block where the DRU is located		0–8	20, 80, 160, or 320	26	DRU1 to DRU9	$4\times N$	$37\times N$ + DRU index
		9–17	80, 160, or 320		DRU1 to DRU9	$4\times N+1$	$37\times N$ + 9 + DRU index
		18	80, 160, or 320		Reserved	Reserved	Reserved
		19–27	80, 160, or 320		DRU1 to DRU9	$4\times N+2$	$37\times N$ + 19 + DRU index
		28–36	80, 160, or 320		DRU1 to DRU9	$4\times N+3$	$37\times N$ + 28 + DRU index
		37–40	20, 80, 160, or 320	52	DRU1 to DRU4	$4\times N$	$16\times N$ + DRU index
		41–44	80, 160, or 320		DRU1 to DRU4	$4\times N+1$	$16\times N$ + 4 + DRU index
		45–48	80, 160, or 320		DRU1 to DRU4	$4\times N+2$	$16\times N$ + 8 + DRU index
		49–52	80, 160, or 320		DRU1 to DRU4	$4\times N+3$	$16\times N$ + 12 + DRU index
		53, 54	20, 80, 160, or 320	106	DRU1 and DRU2	$4\times N$	$8\times N$ + DRU index
		55, 56	80, 160, or 320		DRU1 and DRU2	$4\times N+1$	$8\times N$ + 2 + DRU index
		57, 58	80, 160, or 320		DRU1 and DRU2	$4\times N+2$	$8\times N$ + 4 + DRU index
		59, 60	80, 160, or 320		DRU1 and DRU2	$4\times N+3$	$8\times N$ + 6 + DRU index
		61–127	Reserved	Reserved	Reserved	Reserved	Reserved

Copyright © 2025 IEEE. All rights reserved.
This is an unapproved IEEE Standards Draft, subject to change.

Table 9-65b—Encoding of the PS160 and RU Allocation subfields in a UHR variant User Info field for DBW 40 MHz

PS160 subfield	B0 of the RU Allocation subfield	B7–B1 of the RU Allocation subfield	Bandwidth (MHz)	DRU size	DRU index (corresponding to Table 38-7 for DBW40)	40 MHz frequency subblock index (l)	PHY DRU index
0–3: 80 MHz frequency sub-block where the DRU is located		0–17	40, 80, 160, or 320	26	DRU1 to DRU18	$2\times N$	$37\times N$ + DRU index
		18	80, 160, or 320		Reserved	Reserved	Reserved
		19–36	80, 160, or 320		DRU1 to DRU18	$2\times N+1$	$37\times N$ + 19 + DRU index
		37–44	40, 80, 160, or 320	52	DRU1 to DRU8	$2\times N$	$16\times N$ + DRU index
		45–52	80, 160, or 320		DRU1 to DRU8	$2\times N+1$	$16\times N$ + 8 + DRU index
		53–56	40, 80, 160, or 320	106	DRU1 to DRU4	$2\times N$	$8\times N$ + DRU index
		57–60	80, 160, or 320		DRU1 to DRU4	$2\times N+1$	$8\times N$ + 4 + DRU index
		61,62	40, 80, 160, or 320	242	DRU1 and DRU2	$2\times N$	$4\times N$ + DRU index
		63,64	80, 160, or 320		DRU1 and DRU2	$2\times N+1$	$4\times N$ + 2 + DRU index
		65–127	Reserved	Reserved	Reserved	Reserved	Reserved

Copyright © 2025 IEEE. All rights reserved.
This is an unapproved IEEE Standards Draft, subject to change.

Table 9-65c—Encoding of the PS160 and RU Allocation subfields in a UHR variant User Info field for DBW 60 MHz

PS160 subfield	B0 of the RU Allocation subfield	B7–B1 of the RU Allocation subfield	Bandwidth (MHz)	DRU size	DRU index (corresponding to Table 38-8 for DBW60(#8175))	80 MHz frequency subblock index (l)	PHY DRU index
0–3: 80 MHz frequency sub-block where the DRU is located		0–36	Reserved	Reserved	Reserved	Reserved	Reserved
		37–48	80, 160, or 320	52	DRU1 to DRU12	N	$16\times N$ + DRU index
		49-52	Reserved	Reserved	Reserved	Reserved	Reserved
		53–58	80, 160, or 320	106	DRU1 to DRU 6	N	$8\times N$ + DRU index
		59-60	Reserved	Reserved	Reserved	Reserved	Reserved
		61–63	80, 160, or 320	242	DRU1 to DRU3	N	$4\times N$ + DRU index
		64–127	Reserved	Reserved	Reserved	Reserved	Reserved

Copyright © 2025 IEEE. All rights reserved.
This is an unapproved IEEE Standards Draft, subject to change.

Table 9-65d—Encoding of the PS160 and RU Allocation subfields in a UHR variant User Info field for DBW 80 MHz

PS160 subfield	B0 of the RU Allocation subfield	B7–B1 of the RU Allocation subfield	Bandwidth (MHz)	DRU size	DRU index (corresponding to Table 38-9 for DBW80)	80 MHz frequency subblock index (l)	PHY DRU index
0–3: 80 MHz frequency subblock where the DRU is located		0–36	Reserved	Reserved	Reserved	Reserved	Reserved
		37–52	80, 160, or 320	52	DRU1 to DRU16	*N*	16×*N* + DRU index
		53–60	80, 160, or 320	106	DRU1 to DRU8	*N*	8×*N* + DRU index
		61–64	80, 160, or 320	242	DRU1 to DRU4	*N*	4×*N* + DRU index
		65,66	80, 160, or 320	484	DRU1 and DRU2	*N*	2×*N* + DRU index
		67–127	Reserved	Reserved	Reserved	Reserved	Reserved

NOTE 1—B0 of the RU Allocation field is set to 0 to indicate that the DRU allocation applies to the primary 80 MHz channel and set to 1 to indicate that the RU allocation applies to the secondary 80 MHz channel in the primary 160 MHz, if PS160 field is equal to 0. B0 of the RU Allocation field is set to 0 to indicate that the DRU allocation applies to the lower 80 MHz in the secondary 160 MHz and is set to 1 to indicate that the DRU allocation applies to upper 80 MHz in the secondary 160 MHz, if PS160 field is equal to 1.(#11567)

The UL FEC Coding Type subfield of the User Info field indicates the code type of the solicited UHR TB PPDU. The UL FEC Coding Type subfield is set to 0 to indicate BCC and set to 1 to indicate LDPC.

The UL UHR-MCS subfield of the User Info field indicates the UHR-MCS of the solicited UHR TB PPDU. In a UHR variant User Info field, the encoding of the UL UHR-MCS subfield is defined in 38.3.11 (UHR modulation and coding schemes (UHR-MCSs) and Unequal modulation (UEQM)) and is set as defined in 37.4.2 (UHR UL MU operation).

If the UL FEC Coding Type subfield is set to 1, the 2xLDPC subfield of the User Info field indicates whether nominal LDPC codeword length of 3888 is used:

— Set to 0 to indicate the nominal LDPC codeword length of 648, 1296 or 1944 is used.

— Set to 1 to indicate the nominal LDPC codeword length of 3888 is used.

If the UL FEC Coding Type subfield is set to 0, B26 is set to 1.

If the RU Allocation subfield of the User Info field indicates the assigned RU is located in an 80 MHz frequency subblock where the corresponding bit in the DRU/RRU Indication subfield in the UHR variant Common Info field is set to 1, or located in more than one 80 MHz frequency subblock where the corresponding bits in the DRU/RRU Indication subfield in the UHR variant Common Info field are set to all 1s, the RRU SS Allocation subfield of the UHR variant User Info field associated with an RRU indicates the spatial

Copyright © 2025 IEEE. All rights reserved.
This is an unapproved IEEE Standards Draft, subject to change.

streams of the solicited UHR TB PPDU and the format is defined in (#Ed)Figure 9-114b (RRU SS Allocation subfield format of a UHR variant User Info field associated with an RRU).

	B0 B2	B3 B4
	Starting Spatial Stream	Number Of Spatial Streams
Bits:	3	2

Figure 9-114b—RRU SS Allocation subfield format of a UHR variant User Info field associated with an RRU

The Starting Spatial Stream subfield indicates the starting spatial stream and is set to the starting spatial stream minus 1 (see 37.4.2.3.2 (TXVECTOR parameters for UHR TB PPDU response to Trigger frame)) with a maximum value of 7 for the Starting Spatial Stream subfield (see 38.2.2 (TXVECTOR and RXVECTOR parameters)). The Starting Spatial Stream subfield is set to 0 if the corresponding RU or MRU is not allocated for MU-MIMO.

The Number Of Spatial Streams subfield indicates the number of spatial streams, and is set to the number of spatial streams minus 1 with a maximum value of 3 (see 38.2.2 (TXVECTOR and RXVECTOR parameters)).

If the RU Allocation subfield of the User Info field indicates the assigned RU is located in an 80 MHz frequency subblock where the corresponding bit in the DRU/RRU Indication subfield in the UHR variant Common Info field is set to 0, the DRU SS Allocation And DBW subfield of the UHR variant User Info field associated with a DRU indicates the DRU DBW and spatial streams of the solicited UHR TB PPDU and the format is defined in (#Ed)Figure 9-114c (DRU SS Allocation And DBW subfield format of a UHR variant User Info field associated with a DRU), where B2–B3 are set to 0.

	B0 B1	B2 B3	B4
	DRU Distribution BW	Reserved	Number Of Spatial Streams
Bits:(#Ed)	2	2	1

Figure 9-114c—DRU SS Allocation And DBW subfield format of a UHR variant User Info field associated with a DRU

The DRU Distribution BW subfield indicates the DBW of the assigned DRU and is encoded as follows:

— 0 for a DBW of 20 MHz.
— 1 for a DBW of 40 MHz.
— 2 for a DBW of 80 MHz.
— 3 for a DBW of 60 MHz.

The Number Of Spatial Streams subfield indicates the number of spatial streams, and is set to the number of spatial streams minus 1 with a maximum value of 1 (see 38.2.2 (TXVECTOR and RXVECTOR parameters)).

Copyright © 2025 IEEE. All rights reserved.
This is an unapproved IEEE Standards Draft, subject to change.

The UL Target Receive Power subfield indicates the expected receive signal power, measured at the AP's antenna connector and averaged over the antennas, for the UHR portion of the UHR TB PPDU transmitted on the assigned RU and is defined in Table 9-46k (UL Target Receive Power subfield in Trigger frame).

If the size of RU or MRU is smaller than or equal to 2×996-tones, then the PS160 subfield is set to 0 to indicate that the RU, DRU or MRU allocation applies to the primary 160 MHz channel and set to 1 to indicate that the RU, DRU(#11567) or MRU allocation applies to the secondary 160 MHz channel. Otherwise, the PS160 subfield is used to indicate the RU or MRU index along with the RU Allocation subfield as defined in Table 9-46l (Encoding of the PS160 and RU Allocation subfields in an EHT variant User Info field).

The Trigger Dependent User Info subfield is set as defined in 9.3.1.22.4 (HE variant User Info field).

Insert a new child subclause of 9.3.1.22 as follows:

9.3.1.22.7 Feedback User Info field

The Feedback User Info field is a User Info field that does not carry user specific information but carries feedback information.

The Feedback User Info field is identified by an AID12 value of 2008 and is optionally present in a BSRP NTB Trigger frame that is generated by a UHR non-AP STA.

NOTE—A UHR AP does not use the value 2008 as an AID for any STA associated to the AP (see 35.15.1 (Basic EHT BSS operation) and 37.10 (UHR BSS operation)).

The format of the Feedback User Info field is defined in (#Ed)Figure 9-114d (Feedback User Info field format).

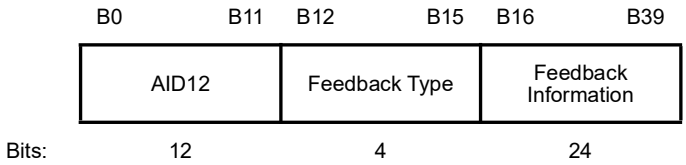

Figure 9-114d—Feedback User Info field format

The Feedback Type field indicates the type of feedback information included in the Feedback user Info field and follows the encoding shown in (#Ed)Table 9-65e (Feedback Type subfield encoding)

Table 9-65e—Feedback Type subfield encoding

Feedback Type	Feedback subfield type
0	Unsolicited Unavailability feedback
1	Reserved
2	Co-BF feedback
3	Co-TDMA feedback
4	Co-SR feedback
5-15	Reserved

Copyright © 2025 IEEE. All rights reserved.
This is an unapproved IEEE Standards Draft, subject to change.

If the Feedback Type field is set to 0 for Unavailability Feedback, then the format of the Feedback Information field is defined in (#Ed)Figure 9-114e (Feedback Information field format if the Feedback Type is set to 0). Other values are reserved.

	B0 – B9	B10 – B19	B20 – B23
	Unavailability Target Start Time	Unavailability Duration	Reserved
Bits:	10	10	4

Figure 9-114e—Feedback Information field format if the Feedback Type is set to 0

The Unavailability Target Start Time field indicates the value of TSF(15:6) at the time when the STA transmitting the Multi-STA BlockAck frame will become unavailable (see 11.2.1 (General)), except that this field is reserved (i.e., invalid and to be ignored by the recipient) if the Unavailability Duration subfield is equal to 0. The Unavailability Duration field indicates the duration in units of 64 µs over which the STA transmitting the BSRP NTB Trigger frame is unavailable, except that the value 0 indicates that the STA is available, and the value 1023 indicates that the STA is unavailable for an indefinite duration of time.

The Feedback User Info field is identified by setting the AID12 field to 2008 and is present in a BSRP Trigger frame transmitted as a Co-TDMA TB ICF by a Co-TDMA coordinating AP (see 37.15.2.3.2 (Polling phase)).

Editor's Note: The paragraph above needs to be aligned with the first few paragraphs of this subclause.

A Feedback User Info field having the format shown in Figure 9-114d (Feedback User Info field format) shall be included in the BSRP Trigger frame and MU-RTS Trigger frame that is addressed to one or more EMLSR or DPS STAs within a Co-BF transmission frame sequence or a Co-SR transmission frame sequence. The AID12 field value is set to 2008. The Feedback Type field is set to 2 indicating to the recipient STA(s) that this BSRP Trigger frame or MU-RTS Trigger frame is sent within a Co-BF transmission sequence, and is set to 4 indicating to the recipient STA(s) that this BSRP Trigger frame or MU-RTS Trigger frame is sent as an ICF within a Co-SR transmission frame sequence. The format of the Feedback Information field is shown in (#Ed)Figure 9-114f (Feedback Information field format if the Feedback Type is set to 2 or 4) that includes an Extended Timeout Duration field indicating the duration that the recipient STA(s) shall wait before initiating a switch back procedure. Switch back procedures can be either switching back to listen mode on the link of operation for EMLSR STAs or switching back to LC mode for DPS STAs. The Extended Timeout Duration is reported in units of 4 µs. The value 0 indicates that an EMLSR STA should follow normal EMLSR switch back procedures and a DPS STA should follow the normal DPS switch back procedures.

	B0 – B7	B8 – B23
	Extended Timeout Duration	Reserved
Bits:	8	16

Figure 9-114f—Feedback Information field format if the Feedback Type is set to 2 or 4

If the Feedback Type field is set to 3, then the format of the Feedback Information field is defined in Figure 9-114g (Feedback Information field if the Feedback Type field is set to 3)(#Ed).

The Primary AC field indicates the primary AC of the obtained TXOP by a Co-TDMA coordinating AP. The Primary AC field is encoded as the AC index (ACI) defined in Table 9-193 (ACI-to-AC coding).

Copyright © 2025 IEEE. All rights reserved.
This is an unapproved IEEE Standards Draft, subject to change.

	B0 B1	B2	B3 B10	B11 B23
	Primary AC	TXOP Return Solicited	Max TXOP Allocation Under Consideration	Reserved
Bits:	2	1	8	13

Figure 9-114g—Feedback Information field if the Feedback Type field is set to 3

The TXOP Return Solicited field indicates whether the Co-TDMA coordinating AP is soliciting a TXOP return from a Co-TDMA coordinated AP, as described in 37.15.2.3.5 (TXOP return phase). The TXOP Return Solicited field is set to 1 if the Co-TDMA coordinating AP is soliciting a TXOP return from a Co-TDMA coordinated AP; otherwise, it is set to 0.

The Max TXOP Allocation Under Consideration field indicates the maximum TXOP duration that the Co-TDMA coordinating AP considers for allocation to Co-TDMA coordinated AP(s), in units of 16 µs.

NOTE—A polled AP can take into account the value carried in the Max TXOP Allocation Under Consideration field to determine its response to a Co-TDMA ICF.

Insert a new child subclause of 9.3.1.22 as follows:

9.3.1.22.8 Intermediate FCS

Insert the following paragraphs:

The intermediate FCS (IFCS) is a CRC that is calculated following the rules in 9.2.4.9 (FCS field) except that the calculation fields are all of the fields of the MAC header and the Frame Body field up to and excluding the two User Info fields that contain the IFCS. After the two User Info fields that contain the IFCS, there might(#10358) be other User Info fields for STAs that do not require an IFCS, before the Padding field and FCS field.

The IFCS is carried in two contiguous User Info fields, each with AID12 subfield equal to 2011, as shown in (#Ed)Figure 9-114h (Formats of User Info fields with AID12 subfield equal to 2011).

	B0 B11	B12 B15	B16 B39
First User Info field	AID12	Reserved	IFCS[0:23]
Bits:	12	4	24

	B0 B11	B12 B15	B16 B23	B24 B39
Second User Info field	AID12	Reserved	IFCS[24:31]	Reserved
Bits:	12	4	8	16

Figure 9-114h—Formats of User Info fields with AID12 subfield equal to 2011

The two User Info fields that contain the IFCS are(#M529, #4334, #4521, #6358, #6776, #7592, #10359, #11497, #11569, #11633, #11942) present in a Trigger frame that is an ICF and satisfies the requirements defined in 37.22 (Use and requirements of initial Control frames), and are not present otherwise.

Insert a new child subclause of 9.3.1.22 as follows:

Copyright © 2025 IEEE. All rights reserved.
This is an unapproved IEEE Standards Draft, subject to change.

9.3.1.22.9 IFCS Location Indication field

The IFCS Location Indication field, if present, appears immediately after the Common Info field if the Special User Info field is not present and appears immediately after the Special User Info field otherwise.

The IFCS Location Indication field has the format shown in (#Ed)Figure 9-114i (Formats of User Info field with AID12 subfield equal to 2012) and the AID12 subfield is equal to 2012.

	B0 B11	B12 B15	B16 B23	B24 B39
	AID12	Reserved	IFCS Location	Reserved
Bits:	12	4	8	16

Figure 9-114i—Formats of User Info field with AID12 subfield equal to 2012

The IFCS Location field contains the number of User Info fields that appear immediately after the IFCS Location Indication field and up to and excluding the first User Info field with AID12 equal to 2011. The value 0 is reserved.

The IFCS Location field is present in a Trigger frame that is an ICF, and that satisfies the requirements defined in 37.22 (Use and requirements of initial Control frames), and is not present otherwise.

Change the subclause number of Basic Trigger frame format from 9.3.1.22.6 to 9.3.1.22.10 as follows:

9.3.1.22.10 Basic Trigger frame format

Change the subclause number of BFRP Trigger frame format from 9.3.1.22.7 to 9.3.1.22.11 as follows:

9.3.1.22.11 BFRP Trigger frame format

Add the following paragraph at the end of the subclause:

There is no UHR variant User Info field in a BFRP Trigger frame.(#9205)

Change the subclause number of MU-BAR Trigger frame format from 9.3.1.22.8 to 9.3.1.22.12 as follows:

9.3.1.22.12 MU-BAR Trigger frame format

Change the subclause number of MU-RTS Trigger frame format from 9.3.1.22.9 to 9.3.1.22.13 as follows:

Copyright © 2025 IEEE. All rights reserved.
This is an unapproved IEEE Standards Draft, subject to change.

9.3.1.22.13 MU-RTS Trigger frame format

Change Table 9-66 (TXS Mode subfield encoding) as follows:

Table 9-66—TXS Mode ~~sub~~field encoding

TXS Mode ~~sub~~field value	Description
0	MU-RTS that does not initiate TXS procedure.
1	MU-RTS that initiates TXS procedure wherein a scheduled STA can only transmit MPDU(s) addressed to its associated AP.
2	MU-RTS that initiates TXS procedure (as per 35.2.1.2) wherein a scheduled STA can transmit MPDU(s) addressed to its associated AP or addressed to another STA, or MU-RTS that allocates(#5568, #8240, #11944) time as part of a TXSPG procedure (see 37.23.1 (TXOP sharing for multiple P2P non-AP STAs)) to a P2P Group wherein non-AP STAs in the P2P Group can exchange one or more MPDU(s), or MU-RTS that allocates time as part of a Co-TDMA procedure (as per 37.15.2.3 (Coordinated time division multiple access (Co-TDMA))) to a Co-TDMA coordinated AP wherein a Co-TDMA coordinated AP can exchange one or more MPDU(s).
3	Reserved.

Add the following paragraph at(#10360) the end of 9.3.1.22.13:

The UHR variant User Info field in an MU-RTS(#M529, #4223, 5829, 5921, 6777, 7169, 7593, 8021, 10168, 11635, 11945) Trigger frame with a (#5905)UHR variant Common Info is defined in (#Ed)Figure 9-120a (UHR variant User Info field format in the MU-RTS Trigger frame).

	B0 B11	B12 B19	B20	B21 B38	B39
	AID12	RU Allocation	Remain In LC Mode	Reserved	PS160
Bits:	12	8	1	18	1

Figure 9-120a—UHR variant User Info field format in the MU-RTS Trigger frame

The Remain In LC Mode field indicates whether the receiving non-AP STA can stay in LC mode after receiving the MU-RTS Trigger(#5581) frame. The field is set to 1 to indicate that the frame exchange that is initiated by this frame is using parameters that are compliant with the LC mode of the non-AP STA and is set to 0 otherwise.

Change the subclause number of BSRP Trigger frame format from 9.3.1.22.10 to 9.3.1.22.14 as follows:

9.3.1.22.14 BSRP Trigger frame format

Add the following text at the end of the subclause(#6778, 8637, 11570):

Copyright © 2025 IEEE. All rights reserved.
This is an unapproved IEEE Standards Draft, subject to change.

A UHR variant BSRP Trigger frame that is individually addressed and that has the GI And UHR-LTF Type field equal to 3 is (#9845)a BSRP non-trigger based (NTB) Trigger frame. In a BSRP NTB Trigger frame:

— The Number Of UHR-LTF Symbols field, the LDPC Extra Symbol Segment field, the AP Tx Power field, the Pre-FEC Padding Factor field, the PE Disambiguity field, the UL Spatial Reuse field, the UHR P160 field, and DRU/RRU Indication field of the Common Info field are reserved.

— The Special User Info Field(#5480) Flag field of the UHR variant Common Info field is set to 0, indicating that a Special User Info field is present in the Trigger frame(#11647).

- The PHY Version Identifier field of the Special User Info field is equal to 1 (i.e., the Common Info field is a UHR variant Common Info field)(#11647), and the UL_Bandwidth Extension field and NPCA Primary Channel Indication field are set as defined in 9.3.1.22.3 (Special User Info field).
- The UHR Spatial Reuse 1 field, the UHR Spatial Reuse 2 field and the U-SIG Disregard And Validate field of the Special User Info field are reserved.

— In the User Info field with the AID12 field set to the AID of the addressed STA or to the value 0 to indicate that it is addressed to the associated AP(#4224, 11648) (see 9.3.1.22.1 (General)), all the other fields of this User Info field are reserved.

— In a User Info field where the AID12 field is set to the AP ID of an AP participating in a Co-TDMA procedure (see 37.15.2.3.2 (Polling phase)), the User Info field has the format shown in Figure 9-114d (Feedback User Info field format)(#4225, 11947).

- The Feedback Type field is set to 3 for Co-TDMA feedback(#4226).
- The (#4227)Feedback Information field has the format defined in (#4853, 5569, 7771, 11183)Figure 9-114g (Feedback Information field if the Feedback Type field is set to 3).(#4225, #4769, #7594, #8098)

Change the subclause number of GCR MU-BAR Trigger frame format from 9.3.1.22.11 to 9.3.1.22.15 as follows:

9.3.1.22.15 GCR MU-BAR Trigger frame format

Change the subclause number of BQRP Trigger frame format from 9.3.1.22.12 to 9.3.1.22.16 as follows:

9.3.1.22.16 BQRP Trigger frame format

Change the subclause number of NFRP Trigger frame format from 9.3.1.22.13 to 9.3.1.22.17 as follows:

9.3.1.22.17 NFRP Trigger frame format

Change the subclause number of Ranging Trigger frame format from 9.3.1.22.14 to 9.3.1.22.18 as follows:

9.3.1.22.18 Ranging Trigger frame format

9.3.3 (PV0) Management frames

9.3.3.2 Beacon frame format

Insert the following new rows to Table 9-74 (Beacon frame body) (not all lines shown) in numeric order:.

Copyright © 2025 IEEE. All rights reserved.
This is an unapproved IEEE Standards Draft, subject to change.

Table 9-74—Beacon frame body

Order	Information	Notes
…		
(#10595)<Lastassigned + 1>	UHR Operation	The UHR Operation element is present if dot11UHROptionImplemented is true; otherwise, the UHR Operation element is not present. The UHR Operation element does not carry the UHR Operation Parameters field.
(#12236, Ed)<Lastassigned + 2>	UHR Parameters Update	The UHR Parameters Update element is optionally present if dot11UHROptionImplemented is true; otherwise, the UHR Parameters Update element is not present.

9.3.3.5 Association Request frame format

Insert one new row to (#Ed)Table 9-76 (Association Request frame body) (not all lines shown) in numeric order:.

Table 9-76—Association Request frame body

Order	Information	Notes
…		
<Lastassigned + 1>	UHR Capabilities	The UHR Capabilities element is present if dot11UHROptionImplemented is true; otherwise, it is not present.

9.3.3.6 Association Response frame format

Insert two new rows to (#Ed)Table 9-77 (Association Response frame body) (not all lines shown) in numeric order:

Table 9-77—Association Response frame body

Order	Information	Notes
…		
<Lastassigned + 1>	UHR Capabilities	The UHR Capabilities element is present if dot11UHROptionImplemented is true; otherwise, it is not present.
<Lastassigned + 2>	UHR Operation	The UHR Operation element is present if dot11UHROptionImplemented is true; otherwise, it is not present.
<Lastassigned + 3>	AP Channel Report	One or more AP Channel Report elements are optionally present if dot11UHRImplemented is true.
(#12236, Ed)<Lastassigned + 4>	UHR Parameters Update	The UHR Parameters Update element is optionally present if dot11UHROptionImplemented is true; otherwise, the UHR Parameters Update element is not present.

Copyright © 2025 IEEE. All rights reserved.
This is an unapproved IEEE Standards Draft, subject to change.

9.3.3.7 Reassociation Request frame format

Insert one new row to (#Ed)Table 9-78 (Reassociation Request frame body) (not all lines shown) in numeric order:.

Table 9-78—Reassociation Request frame body

Order	Information	Notes
…		
<Lastassigned + 1>	UHR Capabilities	The UHR Capabilities element is present if dot11UHROptionImplemented is true; otherwise, it is not present.

9.3.3.8 Reassociation Response frame format

Insert two new rows to (#Ed)Table 9-79 (Reassociation Response frame body) (not all lines shown) in numeric order:

Table 9-79—Reassociation Response frame body

Order	Information	Notes
…		
<Lastassigned + 1>	UHR Capabilities	The UHR Capabilities element is present if dot11UHROptionImplemented is true; otherwise, it is not present.
<Lastassigned + 2>	UHR Operation	The UHR Operation element is present if dot11UHROptionImplemented is true; otherwise, it is not present.
<Lastassigned + 3>	AP Channel Report	One or more AP Channel Report elements are optionally present if dot11UHRImplemented is true.
(#12236, Ed)<Lastassigned + 4>	UHR Parameters Update	The UHR Parameters Update element is optionally present if dot11UHROptionImplemented is true; otherwise, the UHR Parameters Update element is not present.

9.3.3.9 Probe Request frame format

Insert one new row to (#Ed)Table 9-80 (Probe Request frame body) (not all lines shown) in numeric order:.

Table 9-80—Probe Request frame body

Order	Information	Notes
…		
<Lastassigned + 1>	UHR Capabilities	The UHR Capabilities element is present if dot11UHROptionImplemented is true; otherwise, it is not present.

Copyright © 2025 IEEE. All rights reserved.
This is an unapproved IEEE Standards Draft, subject to change.

9.3.3.10 Probe Response frame format

Insert two new rows to (#Ed)Table 9-81 (Probe Response frame body) (not all lines shown) in numeric order:

Table 9-81—Probe Response frame body

Order	Information	Notes
…		
<Lastassigned + 1>	UHR Capabilities	The UHR Capabilities element is present if dot11UHROptionImplemented is true; otherwise, it is not present.
<Lastassigned + 2>	UHR Operation	The UHR Operation element is present if dot11UHROptionImplemented is true; otherwise, it is not present.
<Lastassigned + 3>	Tx Power Indication	The Tx Power Indication element is present if dot11UHROptionImplemented is true; otherwise, it is optionally present.
(#12236)<Lastassigned + 4>	UHR Parameters Update	The UHR Parameters Update element is optionally present if dot11UHROptionImplemented is true; otherwise, the UHR Parameters Update element is not present.

9.3.3.11 Authentication frame format

Insert the new rows at the end of Table 9-83 (Presence of fields and elements in Authentication frames)(#Ed)

Table 9-83—Presence of fields and elements in Authentication frames

Authentication algorithm	Authentication transaction sequence number	Status code	Presence of fields 4 onwards
…			
MAPC PASN authentication	1	Reserved	The RSNE is present. The RSNXE is present if any subfield of the Extended RSN Capabilities field in this element, except the Field Length subfield, is nonzero. The PASN Parameters element is present. The Timeout Interval element is optionally present. The Wrapped Data element is present if the wrapped data format in the PASN Parameters element is non-zero and not reserved

Copyright © 2025 IEEE. All rights reserved.
This is an unapproved IEEE Standards Draft, subject to change.

Table 9-83—Presence of fields and elements in Authentication frames

Authentication algorithm	Authentication transaction sequence number	Status code	Presence of fields 4 onwards
MAPC PASN authentication	2	Status	The RSNE is present and the PASN Parameters element is present if Status Code field is 0. The RSNXE is present if any subfield of the Extended RSN Capabilities field in this element, except the Field Length subfield, is nonzero. The Timeout Interval element is optionally present. The Wrapped Data element is present if wrapped data format in the PASN Parameters element is nonzero and not reserved and the Status Code field is 0. The MIC element is present.
MAPC PASN authentication	3	Status	The PASN Parameters element is present if Status Code field is 0. The Wrapped Data element is present if wrapped data format in the PASN Parameters element is nonzero and not reserved; and the Status Code field is 0. The MIC element is present.

9.4 Management and Extension frame body components

9.4.1 Fields that are not elements

9.4.1.1 Authentication Algorithm Number field

make the following change as follows:

Authentication algorithm number = 6: FILS Public Key authentication

Authentication algorithm number = 7: PASN authentication

Authentication algorithm number = 8: IEEE 802.1X authentication

Authentication algorithm number = 9: EDPKE authentication

<u>Authentication algorithm number = 10: MAPC PASN authentication</u>

Authentication algorithm number = 65 535: vendor specific use

Copyright © 2025 IEEE. All rights reserved.
This is an unapproved IEEE Standards Draft, subject to change.

9.4.1.4 Capability Information field

Change (#Ed)Figure 9-162 (Capability Information field format (non-DMG STA)) as follows:

	B0	B1	B2	B3	B4	B5	B6	B7
	ESS	IBSS	~~Reserved~~ Enhanced Critical Update Flag	Reserved	Privacy	Short Preamble	Critical Update Flag	Nontransmitted BSSIDs Critical Update Flag
Bits	1	1	1	1	1	1	1	1

	B8	B9	B10	B11	B12	B13	B14	B15
	Spectrum Management	QoS	Short Slot Time	APSD	Radio Measurement	EPD	Reserved	Reserved
Bits	1	1	1	1	1	1	1	1

Figure 9-162—Capability Information field format (non-DMG STA)

Add the following paragraph before the paragraph starting "An AP sets the Privacy subfield" as shown below:

The Enhanced Critical Update(#6820) Flag field is set to 1 in Beacon and Probe Response frames transmitted by a UHR AP when conditions specified in 37.32.3 (Indication of enhanced critical updates) are met. Otherwise, the field is set to 0. The field is reserved in frames transmitted by a non-AP STA.

9.4.1.8 AID field

Change the second paragraph as follows:

The AID field for a non-DMG and non-S1G STA associated to a non-EHT AP is in the range 1 to 2007. As part of MAPC operation (see 37.15 (Multi-AP coordination (MAPC) framework)), an AP can assign an ID to another AP (referred to as an AP ID) by including the AID field in the frame exchanges during the MAPC negotiation phase, as defined in 37.15.1.3.2.2 (AP ID assignment). The AID field for an AP ID or a STA associated to an EHT AP or for a non-AP MLD associated to an AP MLD is in the range 1 to 2006.The AP ID value shares the same pool as AID values that can be assigned to associated STAs. This value is placed in the 14 LSBs of the AID field, with the two MSBs of the AID field set to 1.

Add the following sentence at the end of this subclause as shown below:

(#8462)A UHR AP does not assign AID values of 56 to 63 to any non-AP STA or any non-AP MLD.

9.4.1.9 Status Code field

Insert the following new rows to (#Ed)Table 9-92 (Status codes) (not all lines shown) while maintaining the numerical order and updating the reserved range:

Copyright © 2025 IEEE. All rights reserved.
This is an unapproved IEEE Standards Draft, subject to change.

Table 9-92—Status codes

Status code	Name	Meaning
…	…	…
154	(#Ed)REJECTED_ST_PREP	ST preparation request(#6035)(#7278) rejected due to any reason.
155	REJECTED_ST_EXEC	ST execution request rejected due to any of the following: —Exceeded timeout between the ST preparation response and the ST execution request. —The target AP MLD has not been prepared for the non-AP MLD for ST.
<ANA>(#6376)	DENIED_UHR_NOT_SUPPORTED	Association denied because the requesting STA does not support UHR features.
…	…	…

9.4.1.11 Action field

Change a few existing rows and insert the following new rows to (#Ed)Table 9-93 (Category values) (not all lines shown) while maintaining the numerical order and updating the reserved range:

Table 9-93—Category values

Code	Meaning	See subclause	Robust	Group addressed privacy
…				
36	EHT	9.6.37 (EHT Action frame details)	No	No
37	Protected EHT	9.6.38 (Protected EHT Action frame details)	Yes	No
...	...	...	...	...
43	Protected UHR	9.6.43 (Protected UHR Action frame details)	Yes	No
…	...	...	...	...

Editor's Note: 9.4.1.86 Number Of Stored AIDs field is in baseline IEEE P802.11bi D3.0.

Add the following subcaluse after 9.4.1.86 as follows:

9.4.1.87 DPS Operation Parameters field(#Ed)

The dynamic power save (DPS) Operation Parameters field is defined in Figure 9-207u (DPS Operation Parameters field format).(#Ed)

Copyright © 2025 IEEE. All rights reserved.
This is an unapproved IEEE Standards Draft, subject to change.

	B0 B5	B6 B7	B8 B13	B14 B15	B16	B17
	DPS Padding Delay	Reserved	DPS Transition Delay	Reserved	ICF Required	Parameterized Mode(#8543, 4523, 4644, 5583, 6297, 8680, 6298, 8681)
Bits:	6	2	6	2	1	1

	B18 B20	B21 B24	B25 B28	B29	B30 B31
	LC Mode Bandwidth	LC Mode Nss	LC Mode MCS	Mobile AP DPS Static HCM	Reserved
Bits:	3	4	4	1	2

Figure 9-207u—DPS Operation Parameters field format

The DPS Padding Delay field indicates the minimum MAC padding duration that is required by a DPS STA in an ICF to cause the STA to transition from the LC(#5584, 10271) mode to the HC mode. The DPS Padding Delay field is in units of 4 µs.

The DPS Transition Delay field indicates the amount of time required by a DPS STA to transition from the HC mode to the LC mode. The DPS Transition Delay field is in units of 4 µs.

The ICF Required field indicates whether(#4643, 8541) the DPS assisting STA needs to transmit an ICF(#9899) to the peer DPS STA before performing the frame exchanges with the peer DPS STA in a TXOP. The ICF Required field equal to 1 indicates that the transmission of the ICF(#9899, 11480, 5582, 11481) to the peer DPS STA prior to any frame exchange is needed. Otherwise the ICF transmission before the frame exchanges with the peer DPS STA is only needed if the frame exchange is performed in the HC mode.

The Parameterized Mode(#8543, 4523, 4644, 5583, 6297, 8680, 6298, 8681) field is set to 0 to indicate that only 20 MHz, 1 SS, non-HT PPDU format with the data rate of 6, 12, and 24 Mb/s as the default mode are supported by the DPS STA in the LC mode. The Parameterized Mode field is set to 1 to indicate that a bandwidth up to the bandwidth indicated in the LC Mode Bandwidth field, a number of spatial streams up to the NSS indicated in the LC Mode Nss field, and an MCS up to the MCS indicated in the LC Mode MCS fields are supported by the DPS STA in the LC mode as the parameterized mode. If the DPS STA sets the Parameterized Mode field to 1 then all PPDU formats supported in HC mode(#8544, 4522) are supported by the DPS STA in LC mode. If the Parameterized Mode field is equal to 0, then the LC Mode Bandwidth field, the LC Mode Nss field and the LC Mode MCS field are reserved.(#4885, 8290, 11498)

If the ICF Required field is equal to 0, then the Parameterized Mode(#8543, 4523, 4644, 5583, 6297, 8680, 6298, 8681) field is either equal to 0 or equal to 1, The Parameterize Mode(#8543, 4523, 4644, 5583, 6297, 8680, 6298, 8681) field is set to 0 if the ICF Required field is equal to 1.

Copyright © 2025 IEEE. All rights reserved.
This is an unapproved IEEE Standards Draft, subject to change.

The LC Mode Bandwidth field indicates the maximum bandwidth supported by the STA in the LC mode, as defined in Table 9-129u (LC Mode Bandwidth field encoding).(#11028, 11668, 7624, 11029)

Table 9-129u—LC Mode Bandwidth field encoding

LC Mode Bandwidth field value	Description
0	20 MHz
1	40 MHz
2	80 MHz
3	160 MHz
4	320 MHz
5–7	Reserved

The LC Mode Nss field indicates the maximum number of the spatial streams supported by the STA in the LC mode and is set to the maximum number of the spatial streams minus 1.(#11668, 7624, 11029)

The LC Mode MCS field indicates the highest MCS supported by the STA in the LC mode.

The Mobile AP DPS Static HCM field is set to 1 by a mobile(#6782) AP operating in DPS mode to indicate that it will remain in the DPS high capability mode until the next TBTT on that link, and is set to 0 otherwise. The field is reserved if the DPS Enabled field is set to 0 or if the AP does not support operating in high capability mode until the next TBTT.

9.4.2 Elements

9.4.2.1 General

Change (#Ed)Table 9-148 (Element IDs) (not all lines shown):

Table 9-148—Element IDs

Element	Element ID	Element ID Extension	Extensible	Fragmentable
…				
UHR Operation (see 9.4.2.353 (UHR Operation element))	255	151	Yes	No
UHR Capabilities (see 9.4.2.354 (UHR Capabilities element))	255	152	Yes	No
MAPC (see 9.4.2.355 (MAPC element))	255	153	Yes	No
SMD Information (see 9.4.2.356 (SMD Information element))	255	154	Yes	No
SMD BSS Transition Parameters(#7598) (see 9.4.2.357 (SMD BSS Transition Parameters element))	255	155	Yes(#11953)	Yes

Copyright © 2025 IEEE. All rights reserved.
This is an unapproved IEEE Standards Draft, subject to change.

Table 9-148—Element IDs *(continued)*

Element	Element ID	Element ID Extension	Extensible	Fragmentable
Extended Channel Usage(#7598) (see 9.4.2.358 (Extended Channel Usage element))	255	156	Yes	No
UHR Mode Change(#7598) (see 9.4.2.359 (UHR Mode Change element))	255	157	Yes	Yes
UHR Parameters Update(#7598) (see 9.4.2.360 (UHR Parameters Update element))	255	158	Yes	Yes
Tx Power Indication (see 9.4.2.361 (Tx Power Indication Element))	255	159	Yes	No

9.4.2.3 Supported Rates and BSS Membership Selectors element

Insert the following entry to Table 9-149 (BSS membership selector value encoding) (not all lines shown):(#Ed)

Table 9-149—BSS membership selector value encoding

Value	Feature	Interpretation
122	UHR PHY	Support for the mandatory features of Clause 38 (Ultra High Reliability (UHR) PHY specification) is required in order to join the BSS that was the source of the Supported Rates and BSS Membership Selectors element or Extended Supported Rates and BSS Membership Selectors element containing this value.

9.4.2.5 TIM element

9.4.2.5.1 General

Add the following paragraphs before the paragraph starting "When the TIM with a nonzero Partial Virtual Bitmap field is carried in an S1G PPDU …" in this subclause as shown below:

The TIM element carried in a Beacon frame transmitted by a UHR(#8462) AP includes the Critical Updates Indicator field, starting from(#12539) bit 56, subject to the conditions specified in 37.32.3 (Indication of enhanced critical updates).

The format of the Critical Updates Indicator field(#Ed) is as shown in (#Ed)Figure 9-243a (Critical Updates Indicator field format).

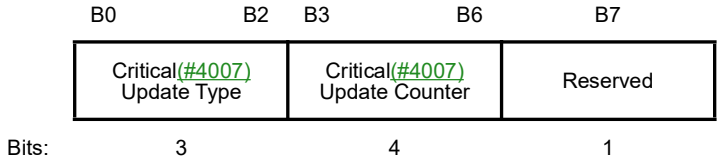

Figure 9-243a— Critical Updates Indicator field format

Copyright © 2025 IEEE. All rights reserved.
This is an unapproved IEEE Standards Draft, subject to change.

The Critical Update Type field indicates the type of critical update, and the value is set as shown in (#Ed)Table 9-149a (Encoding of Critical Update Type field).

Table 9-149a—Encoding of Critical Update Type field

Value	Type
0	No UHR update
1	Update to at least one UHR mode of operation
2–7	Reserved

The Critical Update Counter field(#Ed) carries a counter which is incremented when conditions specified in 37.32.3 (Indication of enhanced critical updates) are met.

9.4.2.19 Measurement Request element

9.4.2.19.7 Beacon request

Modify (#Ed)Table 9-159 (Measurement Mode definitions for Beacon request) as shown below:

Table 9-159—Measurement Mode definitions for Beacon request

Mode	Value
Passive	0
Active	1
Beacon Table	2
RTS/Active	3
Reserved	4~~3~~–255

9.4.2.20 Measurement Report element

9.4.2.20.7 Beacon report

Modify the following paragraph as shown below:

The Reported Frame Type subfield indicates the type of frame reported. A 0 indicates a Beacon or Probe Response frame; a 1 indicates a Measurement Pilot frame or CTS frame.

The RCPI field indicates the received channel power of the Beacon, Measurement Pilot, Probe Response frame, or CTS frame, which is a logarithmic function of the received signal power, as defined 9.4.2.36 (RCPI element).

The RSNI field indicates the received signal-to-noise indication for the Beacon, Measurement Pilot, Probe Response frame, or CTS frame, as described in 9.4.2.39 (RSNI element).

The BSSID field contains the BSSID from the Beacon, Measurement Pilot, Probe Response frame, or RTS frame that solicited a CTS frame.

Copyright © 2025 IEEE. All rights reserved.
This is an unapproved IEEE Standards Draft, subject to change.

9.4.2.23 RSNE

9.4.2.23.3 AKM suites

Insert the following new row (MAPC PASN) into Table 9-208 (AKM suite selectors)(#Ed):

Table 9-208—AKM suite selectors

OUI	Suite type	Meaning			Authentication algorithm numbers (see 9.4.1.1 (Authentication Algorithm Number field))	Cipher suite selector restriction
		Authentication type	Key management type	Key derivation type		
. . .						
00-0F-AC	30	MAPC PASN	MAPC PASN	MAPC PASN key management defined in 12.17 (Multi-AP Coordination Preassociation Security Negotiation)	Defined in 12.17.3 (Key establishment with MAPC PASN authentication)	None

9.4.2.25 Extended Capabilities element

Add the entry in Table 9-210 (Extended Capabilities field) as follows (not all lines shown):(#Ed)

Table 9-210—Extended Capabilities field

Bit	Information	Notes
…		
112	L4S	The L4S field indicates whether the AP supports ECN CE (Congestion Experienced) marking when congestion is experienced for L4S MSDUs in the downlink transmit queues at the MAC layer. This field is set to 1 if the AP has dot11L4SImplemented set to true, otherwise this field is set to 0.
113	Mobile AP	For an AP: Set to 1 to indicate that the AP is not fixed w.r.t. its immediate surroundings. Set to 0 otherwise. For a non-AP STA: This subfield is reserved.

9.4.2.35 Neighbor Report element

Change (#Ed)Figure 9-445 (BSSID Information field format) as follows:

Insert the following paragraphs before the paragraph ("The Operating Class and Channel Number fields...")

Copyright © 2025 IEEE. All rights reserved.
This is an unapproved IEEE Standards Draft, subject to change.

	B0 B1	B2	B3	B4 B9	B10	B11	B12	B13	B14
	AP Reachability	Security	Key Scope	Capabilities	Mobility Domain	High Throughput	Very High Throughput	FTM	High Efficiency
Bits:	2	1	1	6	1	1	1	1	1

	B15	B16	B17	B18	B19	B20	B21	B22	B23-~~B31~~
	ER BSS	Colocated AP	Unsolicited Probe Responses Active	Members Of ESS With 2.4/5 GHz Colocated AP	OCT Supported With Reporting AP	Colocated With 6 GHz AP	Extremely High Throughput	DMG Positioning	~~Reserved~~ Same SMD
Bits:	1	1	1	1	1	1	1	1	91

B24	B25 B31
Ultra High Reliability	Reserved
1	7

Figure 9-445—BSSID Information field format

The Same SMD subfield is set to 1 to indicate that the AP represented by this BSSID (reported AP) belongs to the same SMD as the reporting AP. Otherwise, the Same SMD subfield is set to 0.

The Ultra High Reliability subfield is set to 1 to indicate that the AP represented by this BSSID (reported AP) is a UHR AP. Otherwise, the Ultra High Reliability subfield is set to 0.

Change (#Ed)Table 9-230 (Optional subelement IDs for Neighbor Report) (not all lines shown) as follows:

Table 9-230—Optional subelement IDs for Neighbor Report

Subelement ID	Name	Extensible
…		(#11673)
13	UHR Capabilities	YES
14	UHR Operation	YES
15	SMD Information	YES
16	Tx Power Indication	YES
17~~7~~-38	Reserved	
…	...	...

Insert the following paragraph after the 65th paragraph ("The Data field of the Basic Multi-Link subelement ..."):

The Data field of the UHR Capabilities subelement has the same format as the Information field of the UHR Capabilities element defined in 9.4.2.354 (UHR Capabilities element).

Copyright © 2025 IEEE. All rights reserved.
This is an unapproved IEEE Standards Draft, subject to change.

The Data field of the UHR Operation subelement has the same format as the Information field of the UHR Operation element defined in 9.4.2.353 (UHR Operation element).

The Data field of the SMD Information subelement has the same format as the Information field of the SMD Information element defined in 9.4.2.356 (SMD Information element). The SMD Information subelement is not present if the Same SMD field in the BSSID Information field is equal to 1 or if(#11957) the reported AP is not covered by an SMD. Otherwise, the SMD Information subelement is present.

The (#11957)Data field of the Tx Power Indication has the same format as Information field of the Tx Power Indication element as defined in 9.4.2.361 (Tx Power Indication Element).(#4091)

The RSNE subelement has the same format as the RSNE element as defined in 9.4.2.23 (RSNE).

The RSNXE subelement has the same format as the RSNXE element as defined in 9.4.2.240 (RSNXE).

(#6304, 6305, 6306)The Supported Rates and BSS Membership Selectors subelement has the same format as the Supported Rates and BSS Membership Selectors element as defined in 9.4.2.3 (Supported Rates and BSS Membership Selectors element).

The Extended Supported Rates and BSS Membership Selectors subelement has the same format as the Extended Supported Rates and BSS Membership Selectors element as defined in 9.4.2.11 (Extended Supported Rates and BSS Membership Selectors element).

9.4.2.44 Multiple BSSID element

Change the following paragraph as shown below

The MaxBSSID Indicator field contains a value assigned to n, where 2^n is the maximum number of BSSIDs in the multiple BSSID set, including the reference BSSID (see 11.10.14 (Multiple BSSID set)). The maximum value of n is 8 for a non-UHR AP and 4 for a UHR AP.

Change the second item of the 11th paragraph (not all items shown) as follows:

— The Timestamp and Beacon Interval fields, TIM, DSSS Parameter Set, IBSS Parameter Set, Country, Channel Switch Announcement, Extended Channel Switch Announcement, Wide Bandwidth Channel Switch, Transmit Power Envelope, Supported Operating Classes, IBSS DFS, ERP Information, HT Capabilities, HT Operation, VHT Capabilities, and VHT Operation, S1G Beacon Compatibility, Short Beacon Interval, S1G Capabilities, S1G Operation, HE Capabilities, HE 6 GHz Band Capabilities, HE Operation, BSS Color Change Announcement, Spatial Reuse Parameter Set, Max Channel Switch Time, Quiet, Quiet Channel, and Multiple BSSID Configuration, EHT Capabilities, ~~and~~ EHT Operation elements, UHR Capabilities, and UHR Operation elements are not included in the Nontransmitted BSSID Profile subelement; the values of these elements for each nontransmitted BSSID are always the same as the corresponding transmitted BSSID element values.

9.4.2.169 Reduced Neighbor Report element

9.4.2.169.2 Neighbor AP Information field

Update (#Ed)Table 9-347 (TBTT Information field contents if the TBTT Information Field Type subfield is equal to 0) (not all lines shown) as follows:.

Copyright © 2025 IEEE. All rights reserved.
This is an unapproved IEEE Standards Draft, subject to change.

Table 9-347—TBTT Information field contents if the TBTT Information Field Type subfield is equal to 0

TBTT Information Length subfield value	TBTT Information field contents
…	
16	The Neighbor AP TBTT Offset subfield, the BSSID subfield, the Short-SSID subfield, the BSS Parameters subfield, the 20 MHz PSD subfield and the MLD Parameters subfield
17	The Neighbor AP TBTT Offset subfield, the BSSID subfield, the Short-SSID subfield, the BSS Parameters subfield, the 20 MHz PSD subfield, the MLD Parameters subfield and the Enhanced Critical Updates Information subfield
~~17~~18–255	The first 17~~6~~ octets of the field contain the Neighbor AP TBTT Offset subfield, the BSSID subfield, the Short-SSID subfield the BSS Parameters subfield, and the 20 MHz PSD subfield, ~~and~~ the MLD Parameters subfield and the Enhanced Critical Updates Information subfield (i.e., same contents as when the length of the TBTT Information field is 1~~6~~7). The remaining octets are reserved.

Change (#Ed) Figure 9-777 (TBTT Information field format) as follows:

	Neighbor AP TBTT Offset	BSSID (optional)	Short SSID (optional)	BSS parameters	20 MHz PSD	MLD Parameters	Enhanced Critical Updates Information
Octets:	1	0 or 6	0 or 4	0 or 1	0 or 1	0 or 3	0 or 1

Figure 9-777—TBTT Information field format

Add the following paragraph after the paragraph starting "The Disabled Link Indication subfield …"

The Enhanced Critical Updates Information field is present when the reported AP is a colocated(#5918) UHR AP (i.e., the Colocated AP field is set to 1). Otherwise, the Enhanced Critical Updates Information field is not present.

The format of the Enhanced Critical Updates Information field is as shown in (#8726, Ed)Figure 9-780a (Enhanced Critical Updates Information field format).

	B0 B3	B4 B6	B7
	Enhanced BSS Parameter Change Count	Critical Update Type	Enhanced All Updates Included
Bits:	4	3	1

Figure 9-780a—Enhanced Critical Updates Information field format

(#8458)The Enhanced BSS Parameter Change Count field carries an unsigned integer, initialized to 0. The value is initialized to 0 when the BSS is started. The field is incremented by 1 (modulo 16) when the conditions specified in 37.32.3 (Indication of enhanced critical updates) are met for the reported AP.

Copyright © 2025 IEEE. All rights reserved.
This is an unapproved IEEE Standards Draft, subject to change.

The Critical Update Type field indicates the type of critical update, and the value is set as shown in Table 9-149a (Encoding of Critical Update Type field).(#4228)

(#8458)The Enhanced All Updates Included field is set to 1 if the UHR Parameters Update element corresponding to the reported AP is included in the frame carrying the Reduced Neighbor Report element. Otherwise, it is set to 0.

Update Figure 9-778 (BSS Parameters subfield format) as shown below:

The format of the BSS Parameters subfield is defined in (#Ed)Figure 9-778 (BSS Parameters subfield format).

	B0	B1	B2	B3	B4	B5	B6	B7
	OCT Recommended	Same SSID	Multiple BSSID	Transmitted BSSID	Member Of ESS With 2.4/5 GHz Colocated AP	Unsolicited Probe Responses Active	Colocated AP	~~Reserved~~ Same SMD
Bits:	1	1	1	1	1	1	1	1

Figure 9-778—BSS Parameters subfield format

Insert the following paragraphs after "NOTE 3—For example, suppose the reported AP transmits …"

The Same SMD subfield is set to 1 when the reported AP belongs to the same SMD as the reporting AP. Otherwise, the Same SMD subfield is set to 0.

9.4.2.176 FILS Request Parameters element

Insert a new row to (#Ed)Table 9-356 (PHY Support Criterion subfield) (not all lines shown) and change the value of the reserved row as follows:

Table 9-356—PHY Support Criterion subfield

Value	Explanation
…	...
5	Indicates that a responding FILS STA is UHR capable.
~~5~~6–7	Reserved

9.4.2.186 Wrapped Data element

Change the third paragraph as follows:

The Wrapped Data field is the data used by the FILS authentication algorithm (see 12.11 (Authentication for FILS)), PASN authentication algorithm (see 12.13 (Preassociation security negotiation)), and EDPKE algorithm (see 12.16.9 (Enhanced Data Privacy Key Exchange)) and MAPC PASN authentication algorithm (see 12.17 (Multi-AP Coordination Preassociation Security Negotiation)).(#Ed)

Copyright © 2025 IEEE. All rights reserved.
This is an unapproved IEEE Standards Draft, subject to change.

9.4.2.198 TWT element

Change (#Ed) Figure 9-837 (Broadcast TWT Parameter Set field format) as follows:

	Request Type	Target Wake Time	Nominal Minimum TWT Wake Duration/ Target Wake Time Extension	TWT Wake Interval Mantissa	Broadcast TWT Info	Restricted TWT Traffic Info (optional)
Octets:	2	2	1	2	2	0 or 3

Figure 9-837—Broadcast TWT Parameter Set field format

Change the following paragraphs begin with ("The Nominal Minimum TWT Wake Duration field..."):

The Nominal Minimum TWT Wake Duration/Target Wake Time Extension field indicates:

— If the Restricted TWT Schedule Info subfield is reserved or set to a value different from 3, the Nominal Minimum TWT Wake Duration, that is the minimum amount of time, in the unit indicated by the Wake Duration Unit subfield, that the TWT requesting STA or TWT scheduled STA is expected to be awake in order to complete the frame exchange sequences for the period of TWT wake interval, where TWT wake interval is the average time that the TWT requesting STA or TWT scheduled STA expects to elapse between successive TWT SPs~~.~~,

— If the Restricted TWT Schedule Info subfield is set to the value 3, the Target Wake Time Extension, that is bit 6 to 9 of the TSF corresponding to the start time of the R-TWT SP scheduled for this Restricted TWT parameter set as the four MSBs of the Nominal Minimum TWT Wake Duration/ Target Wake Time Extension field. The four LSBs of the Nominal Minimum TWT Wake Duration/ Target Wake Time Extension field are reserved.

Change (#Ed) Table 9-369 (Restricted TWT Schedule Info subfield values) as follows:

Table 9-369—Restricted TWT Schedule Info subfield values

Restricted TWT Schedule Info subfield value	Description when included in a Restricted TWT Parameter Set field
0	The corresponding R-TWT schedule does not have any member STAs or the schedule is suspended for all the member STAs. Such an R-TWT schedule is referred to as an idle R-TWT schedule.
1	The corresponding R-TWT schedule has at least one member STA for which the schedule is not suspended. Such an R-TWT schedule is referred to as an active R-TWT schedule.
2	Indicates an active R-TWT schedule for which the R-TWT scheduling AP is unlikely to accept a request from a STA in the BSS to establish a new membership. Such an R-TWT schedule is referred to as a full R-TWT schedule (i.e., the AP might not have sufficient resources within this schedule for accepting new memberships).
3	Indicates that the advertised R-TWT schedule is active and is for an AP corresponding to a nontransmitted BSSID that is a member of the same multiple BSSID set or co-hosted BSSID set as the AP transmitting the Restricted TWT Schedule Info subfield, or for a Co-RTWT requesting AP.

Copyright © 2025 IEEE. All rights reserved.
This is an unapproved IEEE Standards Draft, subject to change.

9.4.2.240 RSNXE

Make the following change in (#Ed)Table 9-393 (Extended RSN Capabilities field):

The Extended RSN Capabilities field is shown in Table 9-393 (Extended RSN Capabilities field).

Table 9-393—Extended RSN Capabilities field

Bit	Information	Notes
...		
18	KEK In PASN	The field is set to 1 when dot11KEKPASNActivated is true to indicate support for deriving a KEK when using PASN or using MAPC PASN. Otherwise, the field is set to 0.
...		

9.4.2.323 Multi-Link element

9.4.2.323.2 Basic Multi-Link element

9.4.2.323.2.2 Presence Bitmap subfield of the Multi-Link Control field in a Basic Multi-Link element

Change (#11827, #Ed)Figure 9-1142 (Presence Bitmap subfield of the Basic Multi-Link element format) in this subclause as shown below:

The format of the Presence Bitmap subfield of the Multi-Link Control field in a Basic Multi-Link element is defined in Figure 9-1142 (Presence Bitmap subfield of the Basic Multi-Link element format).

	B0	B1	B2	B3	B4
	Link ID Info Present	BSS Parameters Change Count Present	Medium Synchronization Delay Information Present	EML Capabilities Present	MLD Capabilities And Operations Present
Bits:	1	1	1	1	1

	B5	B6	B7	B~~7~~8 B11
	AP MLD ID Present	Extended MLD Capabilities And Operations Present	Enhanced Critical Updates Information Present	Reserved
Bits:	1	1	1	4(#8592, 11419, 11852)

Figure 9-1142—Presence Bitmap subfield of the Basic Multi-Link element format

Add the following paragraph(#8723) at the end of 9.4.2.323.2.2:

(#8723)The Enhanced Critical Updates Information Present subfield is set to 1 if the Enhanced Critical Updates Information subfield is present in the Common Info field of the Basic Multi-Link element. Other-

Copyright © 2025 IEEE. All rights reserved.
This is an unapproved IEEE Standards Draft, subject to change.

wise, the Enhanced Critical Updates Information Present subfield is set to 0. A non-AP STA sets this subfield to 0 in the Basic Multi-Link element that it transmits. This subfield is set to 1 in the Basic Multi-Link element transmitted by an AP except when the element is carried in an Authentication frame or FT Action frame.

Update (#Ed)Figure 9-1143 (Common Info field of the Basic Multi-Link element format) in this subclause as shown below:

9.4.2.323.2.3 Common Info field of the Basic Multi-Link element

The format of the Common Info field of the Basic Multi-Link element is defined in Figure 9-1143 (Common Info field of the Basic Multi-Link element format).

	Common Info Length	MLD MAC Address	Link ID Info	BSS Parameters Change Count	Medium Synchronization Delay Information
Octets:	1	6	0 or 1	0 or 1	0 or 2
	EML Capabilities	MLD Capabilities And Operations	AP MLD ID	Extended MLD Capabilities And Operations	Enhanced Critical Updates Information
Octets:	0 or 2	0 or 2	0 or 1	0 or 2	0 or 1

Figure 9-1143—Common Info field of the Basic Multi-Link element format

Add the following at the end of 9.4.2.323.2.3:

The format of the Enhanced Critical Updates Information field is as shown in (#Ed, 4229, 4230)Figure 9-780a (Enhanced Critical Updates Information field format).

The subfields carried in the Enhanced Critical Updates Information field apply to the AP that is affiliated with an AP MLD described in the Basic Multi-Link element and matches one of the following:

— It is the AP that transmitted the Basic Multi-Link element.

— It is the AP that corresponds to a nontransmitted BSSID that is a member of the same multiple BSSID set as the AP that transmitted the Multiple BSSID element containing the profile for the nontransmitted BSSID that includes the Basic Multi-Link element.

The Enhanced BSS Parameter Change Count field carries an unsigned integer, initialized to 0. The value carried in the subfield is incremented by 1 (modulo 16) when conditions specified in 37.32.3 (Indication of enhanced critical updates) are met for the AP.

The Critical Update Type field indicates the type of critical update, and the value is set as shown in Table 9-149a (Encoding of Critical Update Type field).(#4228)

The Enhanced All Updates Included field is set to 1 when conditions specified in 37.32.3 (Indication of enhanced critical updates)(#7625, 4229) are met. Otherwise, the field is set to 0.

Update Figure 9-1147 (Extended MLD Capabilities And Operations subfield format) in this subclause as shown below:(#11779)

The format of the Extended MLD Capabilities And Operations subfield is defined in Figure 9-1147 (Extended MLD Capabilities And Operations subfield format).

Copyright © 2025 IEEE. All rights reserved.
This is an unapproved IEEE Standards Draft, subject to change.

	B0	B1 B4	B5	B6	B7
	Operation Parameter Update Support	Recommended Max Simultaneous Links	NSTR Status Update Support	EMLSR Enablement On One Link Support	BTM MLD Recommendation For Multiple APs Support
Bits:	1	4	1	1	1

	B8	B~~8~~9 B15
	Multi-Link Power Management Support	Reserved
Bits:	1	~~8~~7

Figure 9-1147—Extended MLD Capabilities And Operations subfield format

Add the following row at the next row of Table 9-453 (Subfields of the Extended MLD Capabilities And Operations subfield) in this subclause as shown below:(#11779)

The subfields of the Extended MLD Capabilities And Operations subfield are defined in Table 9-453 (Subfields of the Extended MLD Capabilities And Operations subfield).

Table 9-453—Subfields of the Extended MLD Capabilities And Operations subfield

Subfield	Definition	Encoding
...		
Multi-Link Power Management Support	Indicates whether or not multi-link power management is supported.	For an AP MLD: Set to 1 if the AP MLD has dot11UHRMLPMOptionImplemented equal to true. Set to 0 otherwise. For a non-AP MLD: Set to 1 if the non-AP MLD has dot11UHRMLPMOptionImplemented equal to true. Set to 0 otherwise.

9.4.2.323.2.4 Link Info field of the Basic Multi-Link element

Update (#Ed)Figure 9-1149 (STA Control field format of the Basic Multi-Link element) in this subclause as shown below:

The format of the STA Control field is defined in Figure 9-1149 (STA Control field format of the Basic Multi-Link element).

Copyright © 2025 IEEE. All rights reserved.
This is an unapproved IEEE Standards Draft, subject to change.

	B0 B3	B4	B5	B6	B7	B8	B9	B10	B11
	Link ID	Complete Profile	STA MAC Address Present	Beacon Interval Present	TSF Offset Present	DTIM Info Present	NSTR Link Pair Present	NSTR Bitmap Size	BSS Parameters Change Count Present
Bits:	4	1	1	1	1	1	1	1	1

	B12	B13	B~~12~~14 B15
	Enhanced Critical Updates Information Present	AP Conducted Tx Power Present	Reserved
Bits:	1	1	4~~2~~

Figure 9-1149—STA Control field format of the Basic Multi-Link element

Add the following before the paragraph starting "The format of the STA Info field is … ":

The Enhanced Critical Updates Information Present subfield is set to 1 if the Enhanced Critical Updates Information subfield is present in the STA Info field of the Basic Multi-Link element. Otherwise, the Enhanced Critical Updates Information Present subfield is set to 0. A non-AP STA sets this subfield to 0 in the Basic Multi-Link element that it transmits. An AP sets this subfield to 1 in the Basic Multi-Link element carried in a (Re)Association Response or Link Reconfiguration Response frames and sets it to 0 in other frames.

The AP Conducted Tx Power Present subfield indicates the presence of the AP Conducted Tx Power subfield in the STA Info field. It is set to 1 if the AP Conducted Tx Power subfield is present in the STA Info field. Otherwise, it is set to 0. A non-AP STA sets this subfield to 0 in the basic Multi Link element that the STA transmits. An AP MLD sets this subfield to 1 when the Per-STA Profile carries a complete profile.

Update (#Ed)Figure 9-1150 (STA Info field format of the Basic Multi-Link element) in this sub-clause as shown below:

The format of the STA Info field is defined in Figure 9-1150 (STA Info field format of the Basic Multi-Link element).

	STA Info Length	STA MAC Address	Beacon Interval	TSF Offset	DTIM Info	NSTR Indication Bitmap	BSS Parameters Change Count
Octets:	1	0 or 6	0 or 2	0 or 8	0 or 2	0 or 1 or 2	0 or 1

Enhanced Critical Updates Information	AP Conducted Tx Power
0 or 1	0 or 1

Figure 9-1150—STA Info field format of the Basic Multi-Link element

Copyright © 2025 IEEE. All rights reserved.
This is an unapproved IEEE Standards Draft, subject to change.

Add the following paragraph after the BSS Change Count Present subfield as shown below in 9.4.2.323.2.4:

The format of the Enhanced Critical Updates Information field is as shown in (#Ed, 4230)Figure 9-780a (Enhanced Critical Updates Information field format).

The Enhanced BSS Parameter Change Count field of the Enhanced Critical Updates Information field is initialized to 0 when the BSS is started. The field is incremented by 1 (modulo 16) when the conditions specified in 37.32.3 (Indication of enhanced critical updates) are met for the reported AP. (#6783, 7599, 8458)

(#8458)The Enhanced All Updates Included field is set to 1 if the UHR Parameters Update element is included in the STA Profile field as described in 37.32 (Enhanced BSS parameter critical update procedure(#12610)); otherwise, it is set to 0.

(#8458)When the Enhanced All Updates Included field is 1, the Critical Update Type field indicates the type of critical update, as shown in Table 9-149a (Encoding of Critical Update Type field); otherwise, it is reserved.

The AP Conducted Tx Power field has the same definition as the AP Conducted Tx Power field in the Tx Power Indication element, see 9.4.2.361 (Tx Power Indication Element).

9.4.2.323.4 Reconfiguration Multi-Link element

Modify Figure 9-1156 (Presence Bitmap subfield format of the Reconfiguration Multi-Link element) and the following paragraph as shown below:(#8279, 4637, Ed)

	B0	B1	B2	B3	B4	B45	B11
	MLD MAC Address Present	EML Capabilities Present	MLD Capabilities And Operations Present	Extended MLD Capabilities And Operations Present	Target AP MLD MAC Address Present	Reserved	
Bits:	1	1	1	1	1	~~8~~7	

Figure 9-1156—Presence Bitmap subfield format of the Reconfiguration Multi-Link element

The MLD MAC Address Present ~~sub~~field is set to 1 if the MLD MAC Address field is present in the Common Info field. Otherwise, the MLD MAC Address Present ~~sub~~field is set to 0. A non-AP STA that transmits a Link Reconfiguration Request frame, an ST preparation request or an ST execution request sets the MLD MAC Address Present field to 1.(#6868)

Update Table 9-454 (Reconfiguration Operation Type subfield encoding) as shown below.(#8279, 4637)

The Reconfiguration Operation Type field is set to indicate the type of (#11965)update for the link indicated by the Link ID field as per Table 9-454 (Reconfiguration Operation Type subfield encoding).

Copyright © 2025 IEEE. All rights reserved.
This is an unapproved IEEE Standards Draft, subject to change.

Table 9-454—Reconfiguration Operation Type subfield encoding

Value	Name
0	AP Removal
1	Operation Parameter Update
2	Add Link
3	Delete Link
4	NSTR Status Update
5	UHR Operating Mode and Parameters Update
6~~5~~–15	Reserved

Change the second last paragraph in 9.4.2.323.4 as shown below.

If the Complete Profile ~~sub~~field is set to 1, the STA Profile field includes the complete profile for the STA identified by the STA MAC Address as defined in 35.3.6.4 (Link reconfiguration to the setup links). If the Complete Profile ~~sub~~field is set to 0, the STA Profile field is not included, unless the Reconfiguration Operation Type field is set to 5, in a UHR(#6319) OMP request transmitted by a non-AP STA in which case the STA Profile field is included and the STA Profile field includes a UHR Mode Change element.

Add this paragraph after the paragraph that starts with "The Extended MLD Capabilities And Operations Present subfield is set to …

(#8928)The Target AP MLD MAC Address Present ~~sub~~field is set to 1 if the Target AP MLD MAC Address ~~sub~~field is present in the Common Info field. Otherwise, the Target AP MLD MAC Address Present ~~sub~~field is set to 0. A non-AP STA that transmits an ST preparation request or an ST execution request sets the Target AP MLD MAC Address Present field to 1.(#11967)

Modify (#Ed)Figure 9-1157 (Common Info field format of the Reconfiguration Multi-Link element) as shown below:

	Common Info Length	MLD MAC Address	EML Capabilities	MLD Capabilities And Operations	Extended MLD Capabilities And Operations	Target AP MLD MAC Address
Octets:	1	0 or 6	0 or 2	0 or 2	0 or 2	0 or 6

Figure 9-1157—Common Info field format of the Reconfiguration Multi-Link element

Add the paragraph after the paragraph that starts with "The Extended MLD Capabilities And Operations subfield has …"

(#8929)The Target AP MLD MAC Address subfield, if present, specifies the MLD MAC address of the target AP MLD.

Change Figure 9-1159 (STA Control field format for the Reconfiguration Multi-Link element) as follows:(#4377, 7716, 12534, 10605, 5704, 9477)

Copyright © 2025 IEEE. All rights reserved.
This is an unapproved IEEE Standards Draft, subject to change.

The format of the STA Control field is defined in Figure 9-1159 (STA Control field format for the Reconfiguration Multi-Link element).

	B0 B3	B4	B5	B6	B7 B10
	Link ID	Complete Profile	STA MAC Address Present	AP Removal Timer Present	Reconfiguration Operation Type
Bits:	4	1	1	1	4

	B11	B12	B13	B14	~~B14~~ B15
	Operation Parameters Present	NSTR Bitmap Size	NSTR Indication Bitmap Present	DSO Info Present	Reserved
Bits:	1	1	1	1	~~2~~1

Figure 9-1159—STA Control field format for the Reconfiguration Multi-Link element

Add the following paragraph after the paragraph start with "If the NSTR Indication Bitmap Present subfield"(#4377, 7716, 12534, 10605, 5704, 9477)

The DSO Info Present field is set to 1 to indicate the presence of an Offered 80 MHz DSO Subband field in the STA Info field when the Type field in a UHR Link Reconfiguration Notify frame is 3 and the UHR Link Reconfiguration Notify frame is transmitted by a 320 MHz BSS bandwidth DSO AP to an 80 MHz operating DSO non-AP STA, or to indicate the presence of a DSO Confirmation field in the STA Info field when the Type field in UHR Link Reconfiguration Notify frame is 4 and the UHR Link Reconfiguration Notify frame is transmitted by an 80 MHz operating non-AP STA to a 320 MHz BSS bandwidth DSO AP; otherwise, it is set to 0.

Change Figure 9-1160 (STA Info field format for the Reconfiguration Multi-Link element) as follows:(#4377, 6700, 7716, 12534, 10605, 5704, 9477)

The format of the STA Info field is defined in Figure 9-1160 (STA Info field format for the Reconfiguration Multi-Link element).

	STA Info Length	STA MAC Address	AP Removal Timer	Operation Parameters	NSTR Indication Bitmap
Octets:	1	0 or 6	0 or 2	0 or 3	0 or 1 or 2

	Offered 80 MHz DSO Subband	DSO Confirmation
Octets:	0 or 1	0 or 1

Figure 9-1160—STA Info field format for the Reconfiguration Multi-Link element

Add the following paragraphs and figures after the paragraph start with "The NSTR Indication Bitmap subfield"(#4377, 6700, 7716, 12534, 10605, 9477)

The Offered 80 MHz DSO Subband field indicates the 80 MHz DSO subband assigned by a 320 MHz BSS bandwidth DSO AP to an 80 MHz operating non-AP STA as shown in Figure 9-1160a (Offered 80 MHz DSO Subband field format).

Copyright © 2025 IEEE. All rights reserved.
This is an unapproved IEEE Standards Draft, subject to change.

	B0 B1	B2 B7
	DSO Subband Index	Reserved
Bits:	2	6

Figure 9-1160a—Offered 80 MHz DSO Subband field format

(#4377, 5704, 5705, 6700, 6704, 8059, 10577)The DSO Subband Index field indicates the AP's offered 80 MHz DSO subband when the AP's BSS bandwidth is 320 MHz and the non-AP STA's operating bandwidth is 80 MHz. The value of this field specifies the position of the offered 80 MHz DSO subband within the 320 MHz BSS bandwidth, where a value of 0 corresponds to the 80 MHz DSO subband lowest in frequency, 1 corresponds to the 80 MHz DSO subband next higher in frequency, 2 corresponds to 80 MHz DSO subband highest in frequency, and 3 is reserved.

The DSO Confirmation field indicates whether the offered 80 MHz DSO subband is accepted or rejected by an 80 MHz operating non-AP STA as shown in Figure 9-1160b (DSO Confirmation field format).

	B0	B1 B7
	Status	Reserved
Bits:	1	7

Figure 9-1160b—DSO Confirmation field format

The Status field is set to 1 to indicate that an 80 MHz operating non-AP STA accepts the offered 80 MHz DSO subband and 0 to indicate that it rejects the offered 80 MHz DSO subband.

9.4.2.327 QoS Characteristics element

Change the first paragraph of subclause 9.4.2.327 as follows:

The QoS Characteristics element contains a set of parameters that define the characteristics and QoS expectations of a traffic flow, in the context of a particular non-AP EHT STA, for use by the EHT AP and the non-AP EHT STA in support of QoS traffic transfer using the procedures defined in 11.25.2 (SCS procedures) and 35.8 (Restricted TWT (R-TWT)), or in the context of a particular non-AP UHR STA, for use by the UHR AP and the non-AP UHR STA in support of QoS traffic transfer using the procedures defined in 37.24 (Low-latency indication (LLI))).(#4526)

Update Figure 9-1182 (QoS Characteristics element format) as follows:(#Ed)

Copyright © 2025 IEEE. All rights reserved.
This is an unapproved IEEE Standards Draft, subject to change.

	Element ID	Length	Element ID Extension	Control Info	Minimum Service Interval	Maximum Service Interval	Minimum Data Rate
Octets:	1	1	1	4	4	4	3
	Delay Bound	Maximum MSDU Size	Service Start Time	Service Start Time LinkID	Mean Data Rate	Delay Bounded Burst Size	MSDU Lifetime
Octets:	3	0 or 2	0 or 4	0 or 1	0 or 3	0 or 4	0 or 2
	MSDU Delivery Info	Medium Time	P2P Group Information				
Octets:	0 or 1	0 or 2	0 or 2				

Figure 9-1182—QoS Characteristics element format

Update (#Ed)Figure 9-1183 (Control Info field format) as follows:

	B0 B1	B2 B5	B6 B8	B9 B24	B25 B28	B29	~~B29~~B30 B31
	Direction	TID	User Priority	Presence Bitmap Of Additional Parameters	LinkID	LLI Requested	Reserved
Bits:	2	4	3	16	4	1	2(#8593, 11420)

Figure 9-1183—Control Info field format

Change the five paragraph as follows:

The subfields of the Control Info field are defined as follows:

— The TID subfield contains the TID value of the data frames that are described by this element. The TID subfield is set to the same value as the User Priority subfield by a non-UHR STA (see 35.17 EHT SCS Procedure) and by a UHR STA that does not support the Additional TID feature (see 37.25 (UHR SCS procedure)(#5964)). The TID subfield is set(#7513, 5965) to the same value as the User Priority subfield or to a different value if the UHR STA supports the Additional TID feature. The values 8–15 are reserved.

— The User Priority subfield contains the user priority value (0–7) of the data frames that are described by this element. The User Priority subfield is set to the value of the User Priority subfield in the Intra-Access Category Priority element if the Intra-Access Category Priority element is present in the SCS Descriptor element.

— The Presence Bitmap Of Additional Parameters subfield contains a bitmap where the *i*-th entry of the bitmap is set to 1 if the *i*-th field starting from the Maximum MSDU Size field is present in this element.

— The LinkID subfield contains the link identifier that corresponds to the link for which the direct link transmissions are going to occur. This field is reserved if the Direction subfield is equal to any value but 2 (Direct link).

— The LLI Requested subfield specifies if the use of the (#5880)low-latency indication (LLI) mode is being requested for the traffic of the SCS stream described by the (#12606, #5027, #6347)QoS Characteristics element. The LLI Requested (#8933)field is set to 1 if the use of LLI mode is being requested for the traffic of the SCS stream described by the (#12606, #5027, #6347)QoS Characteristics element and is set to 0 otherwise. The LLI Requested field is reserved if the (#12606, #5027,

Copyright © 2025 IEEE. All rights reserved.
This is an unapproved IEEE Standards Draft, subject to change.

#6347)QoS Characteristics element is sent by a non-UHR non-AP STA or a UHR non-AP STA that does not support LLI or if the Direction subfield is 1 (#11174)(Downlink).

NOTE 1—The presence of the TID subfield is for any future expansion to enable carrying a TID value that is independent of the User Priority.

The Minimum Service Interval field contains the following:

— If the Direction subfield is set to 0 (Uplink), the Minimum Service Interval field contains an unsigned integer that specifies the minimum interval, in microseconds, between the start of two consecutive SPs that are allocated to the STA for UL frame exchanges and the value 0 is reserved unless the transmitting STA is a UHR STA that supports uplink LLI and has set the LLI Requested subfield in the Control Info field to 1.

— If the Direction subfield is set to 1 (Downlink), the Minimum Service Interval field contains an unsigned integer that specifies the minimum interval, in microseconds, between the start of two consecutive SPs that are allocated for DL frame exchange sequences and the value 0 indicates that this parameter is unspecified.

— If the Direction subfield is set to 2 (Direct link) the Minimum Service Interval field contains an unsigned integer that specifies the minimum interval, in microseconds, between the start of two consecutive SPs that are allocated to the STA for direct link frame exchanges and the value 0 is reserved unless the transmitting STA is a UHR STA that supports (#7514, 5967)peer-to-peer LLI and has set the LLI Requested subfield in the Control Info field to 1.

The Maximum Service Interval field contains the following:

— If the Direction subfield is set to 0 (Uplink), the Maximum Service Interval field contains an unsigned integer that specifies the maximum interval, in microseconds, between the start of two consecutive SPs that are allocated to the STA for UL frame exchanges and the value 0 is reserved unless the transmitting STA is a UHR STA that supports (#8698, #8935)uplink LLI and has set the LLI Requested subfield in the Control Info field to 1.

— If the Direction subfield is set to 1 (Downlink), the Maximum Service Interval field contains an unsigned integer that specifies the maximum interval, in microseconds, between the start of two consecutive SPs that are allocated for DL frame exchange sequences and the value 0 indicates that this parameter is unspecified.

— If the Direction subfield is set to 2 (Direct link) the Maximum Service Interval field contains an unsigned integer that specifies the maximum interval, in microseconds, between the start of two consecutive SPs that are allocated to the STA for direct link frame exchanges and the value 0 is reserved unless the transmitting STA is a UHR STA that supports peer-to-peer LLI and has set the LLI Requested subfield in the Control Info field to 1.

— The value of this field is greater than or equal to the value of the Minimum Service Interval field.

NOTE 2—Periodic traffic can be indicated by setting the Minimum Service Interval field and Maximum Service Interval field to the same value.

If the LLI Requested subfield in the Control Info field is 1 and the Minimum Service Interval field and the Maximum Service Interval field are equal to 0, then the minimum interval and the maximum interval values are unspecified, and the QoS (#12606, #5027, #6347)Characteristics element is used only for requesting the use of LLI mode for the traffic of the SCS stream described by this QoS (#12606, #5027, #6347)Characteristics element (#4232, #5968, #8704, #8703, 5880)(see 37.24 (Low-latency indication (LLI))).

NOTE 3—A STA can use (#7515)the TID subfield to identify traffic of the SCS stream to be used for LLI.

If the LLI Requested subfield in the Control Info field is 1 and the Minimum Service Interval field and the Maximum Service Interval field are not equal to 0, then the QoS (#12606, #5027, #6347)Characteristics element is used for requesting the use of LLI mode for the traffic of the SCS stream described by this QoS (#12606, #5027, #6347)Characteristics element (#4232, #5968, #8704, #8703, #5880)(see 37.24 (Low-

Copyright © 2025 IEEE. All rights reserved.
This is an unapproved IEEE Standards Draft, subject to change.

latency indication (LLI))) in addition to defining the characteristics and QoS expectations of a traffic flow (see 11.25.2 SCS procedures).

Add the following paragraphs, including the figure, at the end of clause 9.4.2.327 (QoS Characteristics element):

The P2P Group Information field format is defined in (#Ed)Figure 9-1184a (P2P Group Information field format).

	B0 – B11	B12 – B15
	AID12	Reserved
Bits:	12	4

Figure 9-1184a—P2P Group Information field format

The AID12 subfield identifies the AID12 value assigned by the AP for the P2P group for which the traffic characteristics are described by this element. The AID12 subfield is reserved when the QoS Characteristics element that carries the P2P Group Information field is contained in an SCS Descriptor element in an SCS Request frame with the Request Type field set to 0 (Add).

Insert the following new subclauses at the end of subclause 9.4.2, after 9.4.2.352 EPP Group Parameter Update element (in IEEE P802.11bi D3.0):(#Ed)

9.4.2.353 UHR Operation element

The operation of UHR STAs in a UHR BSS is controlled by the following:

— The HT Operation element, HE Operation element, EHT Operation element, and UHR Operation element if operating in the 2.4 GHz band

— The HT Operation element, VHT Operation element (if present), HE Operation element, EHT Operation element, and UHR Operation element if operating in the 5 GHz band

— The HE Operation element, EHT Operation element and UHR Operation element if operating in the 6 GHz band

The format of the UHR Operation element is shown in Figure 9-aa1 (UHR Operation element format).

	Element ID	Length	Element ID Extension	UHR Operation Parameters	Basic UHR-MCS And NSS Set	UHR Operation Informatio n	DPS Operation Parameters
Octets:	1	1	1	2	4	0, 3 or 5	0 or 4

	NPCA Operation	P-EDCA Operation Parameters	DBE Operation Parameters
Octets:	0 or 6	0 or 3	0 or 3

Figure 9-aa1—UHR Operation element format

Editor's Note: Will further update the figure index and table index after the figure and table indexes of REVmf, 11bf, 11bk and 11bi are aligned.

Copyright © 2025 IEEE. All rights reserved.
This is an unapproved IEEE Standards Draft, subject to change.

The Element ID, Length, and Element ID Extension fields are defined in 9.4.2.1 (General).

The format of the UHR Operation Parameters field is shown in Figure 9-aa2 (UHR Operation Parameters field format(#8446, 12508)).

	B0	B1	B2	B3	B4 B6	B7 B15
	DPS Enabled	NPCA Enabled	DBE Enabled	P-EDCA Enabled	DBE Bandwidth	Reserved
Bits:	1	1	1	1	3	9

Figure 9-aa2—UHR Operation Parameters field format(#8446, 12508)

The DPS Enabled field indicates whether DPS is enabled at the mobile AP transmitting this field. The DPS Enabled field is set to 1 if DPS is enabled; otherwise it is set to 0. The DPS Operation Parameters field is not present in a UHR Operation element if the UHR Operation element is carried in a Beacon frame or DPS is not enabled; otherwise it is present in the UHR Operation element.

The NPCA Enabled field indicates whether NPCA operation is enabled at the AP transmitting this field. The NPCA Enabled field is set to 1 if the NPCA operation is enabled; otherwise it is set to 0. The NPCA Operation Parameters field is not present in a UHR Operation element if the UHR Operation element is carried in a Beacon frame or NPCA operation is not enabled; otherwise it is present in the UHR Operation element.

The DBE Enabled field indicates whether (#6687)DBE mode is enabled at the AP (i.e. the AP is operating with a DBE bandwidth that is greater than the BSS bandwidth). The DBE Enabled field is set to 1 if DBE mode is enabled at the AP, and is set to 0 if DBE mode is not enabled at the AP.

The P-EDCA Enabled field indicates whether P-EDCA operation is enabled at the AP transmitting this field. The P-EDCA Enabled field is set to 1 to indicate that P-EDCA operation is enabled and set to 0 otherwise. The P-EDCA Operation Parameters field is not included in Beacon frames. The P-EDCA Operation Parameters field is included in Probe Response and (Re)Association Response frames if P-EDCA Enabled field is set to 1; otherwise, the P-EDCA Operation Parameters field is not included in Probe Response and (Re)Association Response frames.

(#8446, #12508)The DBE Bandwidth field is set to indicate the expanded DBE bandwidth for DBE mode if the DBE Enabled field is set to 1. If the DBE Enabled field is set to 0, the DBE Bandwidth field is reserved.

The DPS Operation Parameters field contains parameters for dynamic power save operation and is defined in 9.4.1.87 (DPS Operation Parameters field(#Ed)).(#Ed)

The format of the NPCA Operation Information field is defined in Figure 9-aa3 (NPCA Operation Parameters field format).

	B0 B3	B4 B7	B8 B13	B14 B19	B20 B21
	NPCA Primary Channel	NPCA Minimum Duration Threshold	NPCA Switch Delay	NPCA Switch Back Delay	Initial NPCA QSRC
Bits:	4	4	6	6	2

Figure 9-aa3—NPCA Operation Parameters field format

Copyright © 2025 IEEE. All rights reserved.
This is an unapproved IEEE Standards Draft, subject to change.

	B22	B23	B24 B31	B32 B47
	MOPLEN NPCA	NPCA Disabled Subchannel Bitmap Present	Reserved	NPCA Disabled Subchannel Bitmap
Bits:	1	1	8	0 or 16

Figure 9-aa3—NPCA Operation Parameters field format

The NPCA Primary Channel field indicates the channel number of a channel within the BSS bandwidth that corresponds to the channel that the NPCA AP and its associated NPCA non-AP STAs switch to in order to perform NPCA operation, as described in 37.18 (Non-primary channel access (NPCA)).

The NPCA Minimum Duration Threshold field indicates the minimum duration of inter-BSS activity (inter-BSS PPDU or inter-BSS TXOP) that is required to have been indicated on the primary channel of the BSS as a necessary condition to permit the NPCA AP and its associated NPCA non-AP STAs to switch to the NPCA primary channel to perform NPCA operation. The NPCA Minimum Duration Threshold field is set as defined in Table 9-bb1 (Encoding of the NPCA Minimum Duration Threshold field).(#Ed)

Table 9-bb1—Encoding of the NPCA Minimum Duration Threshold field

NPCA Minimum Duration Threshold field	Description
0-15	The NPCA minimum duration threshold T, in units of 128 µs, is T = 512 + NMDT × 128, where NMDT is the field value, which yields a minimum of 512 µs and a maximum of 2432 µs. NOTE—The minimum is chosen to cover at least the transmission time of NPCA ICF and ICR exchange plus a typical Data and Ack/BA exchange using non-HT or non-HT duplicate PPDU format with 6 Mb/s data rate.

The NPCA Switch Delay field indicates the time needed by an NPCA AP to switch from the BSS primary channel to the NPCA primary channel in the unit of 4 µs.

The NPCA Switch Back Delay field indicates the time needed by an NPCA AP to switch from the NPCA primary channel to the BSS primary channel in the unit of 4 µs.

The Initial NPCA QSRC field indicates the value that is used to initialize the EDCAF QSRC[AC] variables when an NPCA STA in the BSS switches to NPCA operation.

The MOPLEN NPCA field indicates which conditions can be used to initiate an NPCA operation. A value of 1 in this field indicates that both PHYLEN NPCA operation and MOPLEN NPCA operation are permitted in the BSS. A value of 0 in this field indicates that only PHYLEN NPCA operation is allowed in the BSS.

The NPCA Disabled Subchannel Bitmap Present field indicates whether the NPCA Disabled Subchannel Bitmap field is present. A 1 in this field indicates that the NPCA Disabled Subchannel Bitmap field is present.

The NPCA Disabled Subchannel Bitmap field is a bitmap where the lowest numbered bit corresponds to the 20 MHz subchannel that lies within the BSS bandwidth and is the lowest in frequency of the set of all 20

Copyright © 2025 IEEE. All rights reserved.
This is an unapproved IEEE Standards Draft, subject to change.

MHz subchannels within the BSS bandwidth. Each successive bit in the bitmap corresponds to the next higher frequency 20 MHz subchannel. A bit in the bitmap that lies within the BSS bandwidth is set to 1 to indicate that the corresponding 20 MHz subchannel is punctured and is set to 0 to indicate that the corresponding 20 MHz subchannel is not punctured. A bit in the bitmap that falls outside of the BSS bandwidth is reserved. This field is present when the value of the NPCA Disabled Subchannel Bitmap Field Present field is equal to 1, and not present, otherwise.

The P-EDCA Operation Parameters field contains parameters for P-EDCA operation as defined in Figure 9-aa4 (P-EDCA Operation Parameters field format).

	B0–B3	B4–B7	B8–B11	B12–B13	B14–B16
	P-EDCA ECWmin	P-EDCA ECWmax	P-EDCA AIFSN	CW DS	P-EDCA PSRC Threshold
Bits:	4	4	4	2	3

	B17–B18	B19–B23
	P-EDCA QSRC Threshold	Reserved
Bits:	2	4

Figure 9-aa4—P-EDCA Operation Parameters field format

The P-EDCA ECWmin, P-EDCA ECWmax and AIFSN fields indicate the CWmin, CWmax and AIFSN value that are used by a P-EDCA STA during P-EDCA contention as defined in 37.6 (Prioritized EDCA (P-EDCA)(#6086)). The P-EDCA ECWmin, ECWmax fields encode the value of P-EDCA Cwmin and P-EDCA CWmax respectively in exponential form. P-EDCA ECWmin and P-EDCA ECWmax values are defined so that:

$$\text{P-EDCA CWmin}=2^{\text{P-EDCA ECWmin}} - 1$$

$$\text{P-EDCA CWmax}=2^{\text{P-EDCA ECWmax}} - 1$$

Values of the P-EDCA ECWmin and P-EDCA ECWmax fields greater than 3 are reserved. Values of the P-EDCA AIFSN field that are greater than 2 are reserved.

The CW DS field indicate the CW_{ds} value used for the randomization of the transmission slot of the DS-CTS frame. The value 3 is reserved. The value 0 indicate that randomization not enabled.

The P-EDCA PSRC threshold field indicates the maximum number of allowed consecutive DS-CTS transmissions. The value 0 and values greater than 4 are reserved.

The P-EDCA QSRC threshold field indicates the value of the QSRC[AC_VO] counter to be allowed to start P-EDCA contention. The value 0 is reserved.

If the DBE Enabled field in the UHR Operation Parameters field is set to 1, the DBE Operation Parameters field is included in the Probe Response and (Re)Association Response frames, otherwise the DBE Operation Parameters field is not included in the Probe Response and (Re)Association Response frames. The DBE Operation Parameters field is not included in the Beacon frames.

Copyright © 2025 IEEE. All rights reserved.
This is an unapproved IEEE Standards Draft, subject to change.

The format of the DBE Operation Parameters field is defined in Figure 9-aa5 (DBE Operation Parameters field format(#10589, #12511)).

	B0 B2	B3	B4 B7	B8 B23
	DBE Bandwidth	DBE Disabled Subchannel Bitmap Present	Reserved	DBE Disabled Subchannel Bitmap
Bits:	3	1	4	0 or 16

Figure 9-aa5—DBE Operation Parameters field format(#10589, #12511)

The DBE Bandwidth field is set to indicate expanded bandwidth for DBE mode as defined in Table 9-bb2 (Encoding of the DBE Bandwidth field).

Table 9-bb2—Encoding of the DBE Bandwidth field

Field	Encoding
DBE Bandwidth	Value 0 is reserved. Set to 1 to indicate 40 MHz DBE bandwidth. Set to 2 to indicate 80 MHz DBE bandwidth. Set to 3 to indicate 160 MHz DBE bandwidth. Set to 4 to indicate 320-1 MHz DBE bandwidth. Set to 5 to indicate 320-2 MHz DBE bandwidth. Values 6 to 7 are reserved.

(#10589, #12511)The DBE Disabled Subchannel Bitmap Present field indicates whether the DBE Disabled Subchannel Bitmap field is present. This field is set to 1 to indicate that the DBE Disabled Subchannel Bitmap field is present, otherwise this field is set to 0.

(#10589, #12511)The DBE Disabled Subchannel Bitmap field is present if the DBE Disabled Subchannel Bitmap Present field is equal to 1 and indicates the set of punctured 20 MHz subchannels within the DBE Bandwidth, otherwise this field is not present.

The DBE Disabled Subchannel Bitmap field is set to indicate disabled 20 MHz subchannels within the DBE Bandwidth. (#10590)The DBE Disabled Subchannel Bitmap field is a bitmap where the lowest numbered bit corresponds to the 20 MHz subchannel that lies within the DBE bandwidth and is the lowest in frequency of the set of all 20 MHz subchannels within the DBE bandwidth. Each successive bit in the bitmap corresponds to the next higher frequency 20 MHz subchannel in the DBE bandwidth. A bit in the bitmap and that lies within the DBE bandwidth is set to 1 to indicate that the corresponding 20 MHz subchannel is punctured and is set to 0 to indicate that the corresponding 20 MHz subchannel is not punctured. A bit in the bitmap that falls outside of the DBE bandwidth is reserved.

9.4.2.354 UHR Capabilities element

9.4.2.354.1 General

A STA declares that it is a UHR STA by transmitting the UHR Capabilities element.

The UHR Capabilities element contains a number of fields that are used to advertise the UHR capabilities of a UHR STA. The UHR Capabilities element is defined in Figure 9-aa6 (UHR Capabilities element format).

Copyright © 2025 IEEE. All rights reserved.
This is an unapproved IEEE Standards Draft, subject to change.

	Element ID	Length	Element ID Extension	UHR MAC Capabilities Information	UHR PHY Capabilities Information
Octets:	1	1	1	...	...

Figure 9-aa6—UHR Capabilities element format

The Element ID, Length, and Element ID Extension fields are defined in 9.4.2.1 (General).

The UHR MAC Capabilities Information field and UHR PHY Capabilities Information field are defined in the subclauses below.

Editor's Note: The length of the UHR MAC Capabilities Information field was proposed to be 4 byte, the Editor makes it undefined as the bits needed are more than 4 byte.

9.4.2.354.2 UHR MAC Capabilities Information field

The format of the UHR MAC Capabilities Information field is defined in Figure 9-aa7 (UHR MAC Capabilities Information field format).

Copyright © 2025 IEEE. All rights reserved.
This is an unapproved IEEE Standards Draft, subject to change.

	B0	B1	B2	B3	B4	B5	B6
	DPS Support	DPS Assisting Support	DPS AP Static HCM Support	Reserved(#11779)	NPCA Support	Enhanced BSR Support	Additional Mapped TID Support
Bits:	1	1	1	1	1	1	1

	B7	B8	B9	B10	B11	B12	B13
	EOTSP Support	DSO Support	P-EDCA Support	DBE Support	UL LLI Support	Peer-to-Peer LLI Support	PUO Support
Bits:	1	1	1	1	1	1	1

	B14	B15	B16	B17	B18	B19	B20
	AP PUO Support	DUO Support	OM Control UL MU Data Disable RX Support	AOM Support	IFCS Location Support	UHR TRS Support	TXSPG Support
Bits:	1	1	1	1	1	1	1

	B21	B22 B25	B26 B28	B29 B33	B34	B35	B36
	TXOP Return Support In TXSPG	UHR Operating Mode And Parameters Update Timeout	Parameter Update Adv Notification Interval	Update Indication In TIM Interval	Bounded ESS	BTM Assurance	Co-BF Support (#7905)
Bits:	1	4	3	5	1	1	1

	B37 Bx	
	Reserved	DBE Capability Parameters
Bits:	...	variable

Figure 9-aa7—UHR MAC Capabilities Information field format

The fields of the UHR MAC Capabilities Information field are defined in Table 9-bb3 (Fields of the UHR MAC Capabilities Information field).

Table 9-bb3—Fields of the UHR MAC Capabilities Information field

Field	Definition	Encoding
DPS Support	Indicates whether or not DPS operation is supported.	Set to 1 if dot11DynamicPowerSaveSupport is true (see 37.17.1 (Dynamic power save (DPS) operation)). Set to 0 otherwise.
DPS Assisting Support	Indicates whether or not the transmission of an ICF for DPS operation is supported.	Set to 1 if dot11DynamicPowerSaveAssisting-Support is true (see 37.17.1 (Dynamic power save (DPS) operation)). Set to 0 otherwise.

Copyright © 2025 IEEE. All rights reserved.
This is an unapproved IEEE Standards Draft, subject to change.

Table 9-bb3—Fields of the UHR MAC Capabilities Information field *(continued)*

Field	Definition	Encoding
DPS Static HCM Support	Indicates whether or not maintaining the DPS HC mode from one Beacon frame till next TBTT is supported.	For a mobile AP Set to 1 if the mobile AP, while operating in DPS mode, is capable of operating in DPS HC mode from one Beacon frame till the next TBTT (see 37.17.2 (Mobile AP's DPS operation)). Set to 0 otherwise. Reserved for a non-AP STA.
NPCA Support	Indicates whether NPCA operation is supported.	Set to 1 to indicate that NPCA operation is supported. Set to 0 to indicate that NPCA operation is not supported.(#11779)
Enhanced BSR Support	For an AP, indicates support for receiving a frame with an EBSR Control field. For a non-AP STA, indicates support for transmitting a frame with an EBSR Control field.	If the +HTC-HE Support subfield is 1: Set to 1 if supported. Set to 0 otherwise. Reserved if the +HTC-HE Support subfield is 0
Additional Mapped TID Support	Indicates whether the STA supports the mapping of up to one additional TID from AC_BE and up to one additional TID from AC_BK to AC_VO and AC_VI access categories for an SCS stream.	For a UHR STA that has set the SCS Traffic Description Support subfield in the EHT Capabilities element to 1: Set to 1 to indicate that the STA supports mapping of up to one additional TID from AC_BE and up to one additional TID from AC_BK to AC_VO and AC_VI access categories for an SCS stream (see 37.25 (UHR SCS procedure)(#5964)). Set to 0 otherwise.
EOTSP Support	Indicates whether EOTSP indication is supported.	Set to 1 to indicate EOTSP indication during TWT SP is supported. Set to 0 to indicate EOTSP indication during TWT SP is not supported.
DSO Support	Indicates whether or not the DSO operation is supported.	Set to 1 if dot11DSOOptionActivated is equal to true (see 37.26 (Dynamic subband operation (DSO)(#7567))). Set to 0 otherwise.
P-EDCA Support	Indicates whether or not P-EDCA is supported.	Set to 1 if dot11PEDCAOptionActivated is true (see 37.6 (Prioritized EDCA (P-EDCA)(#6086))). Set to 0 otherwise.
DBE Support	Indicates whether the DBE operation is supported.	Set to 1 if dot11DBEOptionActivated is true (see 37.28 (Dynamic bandwidth expansion (DBE))). Set to 0 otherwise.
UL LLI Support	Indicates whether or not UL LLI is supported	Set to 1 if dot11LLIOptionActivated is true and UL LLI is supported (see 37.24 (Low-latency indication (LLI))). Set to 0 otherwise.
Peer-to-peer LLI Support	Indicates whether or not Peer-to-peer LLI is supported	Set to 1 if dot11LLIOptionActivated is true and Peer-to-peer LLI is supported (see 37.24 (Low-latency indication (LLI))). Set to 0 otherwise.

Copyright © 2025 IEEE. All rights reserved.
This is an unapproved IEEE Standards Draft, subject to change.

Table 9-bb3—Fields of the UHR MAC Capabilities Information field *(continued)*

Field	Definition	Encoding
PUO Support	Indicates whether or not PUO is supported for a non-AP STA. Indicates whether or not an AP supports being a PUO assisting AP.	For a non-AP STA, set to 1 if dot11PUOOptionImplemented is true (see 37.19.3 (Non-AP STA periodic unavailability operation (PUO) mode)) and set to 0 otherwise. For an AP, set to 1 if the AP supports being a PUO Assisting AP (see 37.19.3 (Non-AP STA periodic unavailability operation (PUO) mode)) 0 and set to 0 otherwise.
AP PUO Support	Indicates whether or not AP PUO is supported for an AP. Indicates whether or not a non-AP STA supports being an AP PUO assisting non-AP STA.	For a non-AP STA, set to 1 if the non-AP STA supports being an AP PUO Assisting non-AP STA (see 37.19.4 (AP PUO mode)) and set to 0 otherwise. For an AP, set to 1 if dot11APPUOOptionImplemented is true (see 37.19.4 (AP PUO mode)) and set to 0 otherwise.
DUO Support	Indicates whether or not DUO is supported	For a non-AP STA, set to 1 if dot11DUOOptionImplemented is true (see 37.19.2 (Dynamic (#7566)unavailability operation (DUO) mode)) and set to 0 otherwise. For an AP, set to 1 if dot11DUOAssistingOptionImplemented is true (see 37.19.2 (Dynamic (#7566)unavailability operation (DUO) mode)) and set to 0 otherwise.
OM Control UL MU Data Disable RX Support	Indicates whether OM Control UL MU Data Disable Rx is supported for an AP	For an AP, set to 1 if the AP supports interpretation of the UL MU Data Disable subfield of the OM Control subfield as described in 26.5.2 (UL MU operation), and set to 0 otherwise. For a non-AP STA, reserved.
AOM Support	Indicates whether adaptive operation mode (AOM) is supported.	Set to 1 to indicate that AOM is supported. Set to 0 to indicate that AOM is not supported.
IFCS Location Support	Indicates whether transmission of the IFCS Location field is supported.	Set to 1 to indicate that transmission of the IFCS Location field in Trigger frames that are sent as ICFs is supported. Set to 0 to otherwise.
UHR TRS Support	For a non-AP STA, indicates support for transmitting a UHR TB PPDU after receiving a frame with a TRS Control field.	Set to 1 if the STA is a non-AP STA that has set the +HTC-HE Support field to 1 and supports transmitting a UHR TB PPDU after receiving a frame with a TRS Control field. Set to 0 otherwise. Reserved for an AP or if the +HTC-HE Support field is 0.
TXSPG Support	Indicates whether TXSPG operation is supported.	Set to 1 to indicate that TXSPG operation is supported. Set to 0 to indicate that TXSPG operation is not supported.
TXOP Return Support In TXSPG	Indicates whether the TXOP return procedure for TXSPG operation is supported.	Set to 1 to indicate that TXOP return in TXSPG operation is supported. Set to 0 to indicate that TXOP return in TXSPG operation is not supported.

Copyright © 2025 IEEE. All rights reserved.
This is an unapproved IEEE Standards Draft, subject to change.

Table 9-bb3—Fields of the UHR MAC Capabilities Information field *(continued)*

Field	Definition	Encoding
Parameter Update Adv Notification Interval	Specifies how far in advance, expressed as number of TBTTs, the AP initiates the advanced notification procedure (as described in 37.28.2) for an upcoming critical update	At an AP, set to the value of dot11UHRParamUpdateAdvNotificationInterval. Reserved for non-AP STA.
Update Indication In TIM Interval	Specifies the duration, expressed as number of TBTTs, for which the AP includes the Critical Updates Indicator field(#Ed) within the Partial Virtual Bitmap field of the TIM element after a critical update has taken effect.	At an AP, set to the value of dot11UpdateIndicationInPVBInterval. Reserved for non-AP STA.
(#7905)Co-BF Support	Indicates whether or not Co-BF operation is supported.	Set to 1 if dot11CoBFOptionImplemented is true. Set to 0 otherwise.

When the UHR Operating Mode And Parameters Update Timeout field is included in a frame sent by an AP affiliated with an AP MLD, the UHR Operating Mode And Parameters Update Timeout field is set as defined in Table 9-bb4 (Encoding of the UHR Operating Mode And Parameters Update Timeout field). When the UHR Operating Mode And Parameters Update Timeout field is included in a frame sent by a non-AP STA affiliated with a non-AP MLD, the UHR Operating Mode And Parameters Update Timeout field is reserved.

Table 9-bb4—Encoding of the UHR Operating Mode And Parameters Update Timeout field

UHR Operating Mode And Parameters Update Timeout sub-field value	UHR Operating Mode And Parameters Update Timeout
0	0 TUs
1	128 µs
2	256 µs
3	512 µs
4	1 TU
5	2 TUs
6	4 TUs
7	8 TUs
8	16 TUs
9	32 TUs

Copyright © 2025 IEEE. All rights reserved.
This is an unapproved IEEE Standards Draft, subject to change.

Table 9-bb4—Encoding of the UHR Operating Mode And Parameters Update Timeout field

UHR Operating Mode And Parameters Update Timeout sub-field value	UHR Operating Mode And Parameters Update Timeout
10	64 TUs
11	128 TUs
12-15	Reserved

The Bounded ESS field is set to 1 by an AP if the set of primary channels of the BSSs in the ESS the AP is a member of is fixed and advertised (see 37.33 (Bounded and BTM-assured ESSs, and mobile APs) for the exact definition), and set to 0 otherwise. This field is reserved when transmitted by a non-AP STA.

The BTM Assurance field is set to 1 by an AP if it uses BSS transition management to ensure that associated STAs are proactively steered to an optimal AP in the ESS (see 37.33 (Bounded and BTM-assured ESSs, and mobile APs)), and set to 0 otherwise. This field is reserved when transmitted by a non-AP STA.

If the DBE Support field is set to 1, an AP includes a DBE Capability Parameters field in the UHR MAC Capabilities Information field. If the DBE Support field is set to 0, an AP does not include the DBE Capability Parameters field. A non-AP STA does not include the DBE Capability Parameters field in the UHR MAC Capabilities Information field.

The format of the DBE Capability Parameters field is defined in (#M529, 5935)Figure 9-aa8 (DBE Capability Parameters field format).

	B0 B2	B3	B4	B5 B7	B8 B31	B32 B55
	DBE Maximum Supported Bandwidth	EHT-MCS Map (BW=160 MHz) Present	EHT-MCS Map (BW=320 MHz) Present	Reserved	EHT-MCS Map (BW=160 MHz)	EHT-MCS Map (BW=320 MHz)
Bits:	3	1	1	3	0 or 24	0 or 24

Figure 9-aa8—DBE Capability Parameters field format

The DBE Maximum Supported Bandwidth field indicates the maximum bandwidth that the AP supports for DBE operation and is set as defined in Table 9-bb5 (Encoding of the DBE Maximum Supported Bandwidth field).

Table 9-bb5—Encoding of the DBE Maximum Supported Bandwidth field

Field	Encoding
DBE Maximum Supported Bandwidth	Value 0 is reserved. Set to 1 to indicate 40 MHz DBE bandwidth. Set to 2 to indicate 80 MHz DBE bandwidth. Set to 3 to indicate 160 MHz DBE bandwidth. Set to 4 to indicate 320 MHz DBE bandwidth. Values 5 to 7 are reserved.

Copyright © 2025 IEEE. All rights reserved.
This is an unapproved IEEE Standards Draft, subject to change.

The EHT-MCS Map (BW=160 MHz) Present field indicates whether the EHT-MCS Map (BW=160 MHz) field is present in the DBE Capability Parameters field. This field is set to 1 if the EHT-MCS Map (BW=160 MHz) field is present in the DBE Capability Parameters field. Otherwise, this field is set to 0.

The EHT-MCS Map (BW=320 MHz) Present field indicates whether the EHT-MCS Map (BW=320 MHz) field is present in the DBE Capability Parameters field. This field is set to 1 if the EHT-MCS Map (BW=320 MHz) field is included in the DBE Capability Parameters field. Otherwise, this field is set to 0.

The EHT-MCS Map (BW=160 MHz) field indicates the combinations of EHT-MCS 0-13, and number of spatial streams NSS, that the AP supports for reception and the combinations that it supports for transmission for 160 MHz DBE bandwidth. This field is defined in 9.4.2.323.4 (Supported EHT-MCS And NSS Set field).

The EHT-MCS Map (BW=320 MHz) field indicates the combinations of EHT-MCS 0-13, and number of spatial streams NSS, that the AP supports for reception and the combinations that it supports for transmission for 320 MHz DBE bandwidth. This field is defined in 9.4.2.323.4 (Supported EHT-MCS And NSS Set field).

9.4.2.354.3 UHR PHY Capabilities Information field

The format of the UHR PHY Capabilities Information field is defined in Figure 9-aa9 (UHR PHY Capabilities Information field format).

	B0	B1	B2	B3	B4
	Max Nss Rx for sounding NDP (≤ 80 MHz)	Max Nss,total Rx for DL MU-MIMO (≤ 80 MHz)	Max Nss Rx for sounding NDP (= 160 MHz)	Max Nss,total Rx for DL MU-MIMO (= 160 MHz)	Max Nss Rx for sounding NDP (= 320 MHz).
Bits:	1	1	1	1	1

B5	B6	B7	...	...
Max Nss,total Rx for DL MU-MIMO (= 320 MHz)	ELR Rx Support	ELR Tx Support	...	...
1	1	1	...	...

Figure 9-aa9—UHR PHY Capabilities Information field format

The subfields of the UHR PHY Capabilities Information field are defined in Table 9-bb6 (Subfields of the UHR PHY Capabilities Information field).

Copyright © 2025 IEEE. All rights reserved.
This is an unapproved IEEE Standards Draft, subject to change.

Table 9-bb6—Subfields of the UHR PHY Capabilities Information field

Subfield	Definition	Encoding
Max Nss Rx for sounding NDP (≤ 80 MHz)	For a PPDU bandwidth less than or equal to 80 MHz, indicates the maximum number of spatial streams supported by the STA for the reception of an EHT sounding NDP.	Set to 0 if up to 4 spatial streams are supported. Set to 1 if up to 8 spatial streams are supported.
Max Nss,total Rx for DL MU-MIMO (≤ 80 MHz)	For a PPDU bandwidth less than or equal to 80 MHz, indicates the maximum total number of spatial streams (summed over all users) on an RU or MRU, supported by the STA for the reception of that RU or MRU in a UHR DL MU-MIMO transmission.	For a non-AP STA: Set to 0 if up to 4 total spatial streams are supported. Set to 1 if up to 8 total spatial streams are supported. Reserved for an AP.
Max Nss Rx for sounding NDP (= 160 MHz)	For a PPDU bandwidth of 160 MHz, indicates the maximum number of spatial streams supported by the STA for the reception of a sounding NDP.	Set to 0 if up to 4 spatial streams are supported. Set to 1 if up to 8 spatial streams are supported.
Max Nss,total Rx for DL MU-MIMO (= 160 MHz)	For a PPDU bandwidth of 160 MHz, indicates the maximum total number of spatial streams (summed over all users) on an RU or MRU, supported by the STA for the reception of that RU or MRU in a UHR DL MU-MIMO transmission.	For a non-AP STA: Set to 0 if up to 4 total spatial streams are supported. Set to 1 if up to 8 total spatial streams are supported. Reserved for an AP.
Max Nss Rx for sounding NDP (= 320 MHz)	For a PPDU bandwidth of 320 MHz, indicates the maximum number of spatial streams supported by the STA for the reception of an EHT sounding NDP.	Set to 0 if up to 4 spatial streams are supported. Set to 1 if up to 8 spatial streams are supported.
Max Nss,total Rx for DL MU-MIMO (= 320 MHz)	For a PPDU bandwidth of 320 MHz, indicates the maximum total number of spatial streams (summed over all users) on an RU or MRU, supported by the STA for the reception of that RU or MRU in a UHR DL MU-MIMO transmission.	For a non-AP STA: Set to 0 if up to 4 total spatial streams are supported. Set to 1 if up to 8 total spatial streams are supported. Reserved for an AP.
ELR Rx Support	Indicates whether reception of enhanced long range (ELR) PPDUs is supported.	Set to 1 to indicate that reception of ELR PPDUs is supported. Set to 0 otherwise.
ELR Tx Support	Indicates whether transmission of ELR PPDUs is supported.	Set to 1 to indicate that transmission of ELR PPDUs is supported. Set to 0 otherwise.
...	....	...

Copyright © 2025 IEEE. All rights reserved.
This is an unapproved IEEE Standards Draft, subject to change.

9.4.2.355 MAPC element

9.4.2.355.1 General

The format of the MAPC element is shown in Figure 9-aa10 (MAPC element format). The usage of this element is described in 37.15 (Multi-AP coordination (MAPC) framework).

	Element ID	Length	Element ID Extension	MAPC Control	MAPC Common Info	MAPC Schemes Info
Octets:	1	1	1	1	variable	variable

Figure 9-aa10—MAPC element format

The Element ID, Length, and Element ID Extension fields are defined in 9.4.2.1 (General).

(#7778)The MAPC Control field is defined in 9.4.2.355.2 (MAPC Control field(#7779)).

(#7778)The MAPC Common Info field is defined in 9.4.2.355.3 (MAPC Common Info field(#7780)).

(#7778)The MAPC Schemes Info field is defined in 9.4.2.355.4 (MAPC Schemes Info field).

9.4.2.355.2 MAPC Control field(#7779)

The format of the MAPC Control field is defined in Figure 9-aa11 (MAPC Control field format).

	B0	B1 B7
	AP ID Present	Reserved
Bits:	1	7

Figure 9-aa11—MAPC Control field format

The AP ID Present field is set to 1 if the AP ID field is present in the MAPC Common Info field, and it is set to 0 otherwise.

9.4.2.355.3 MAPC Common Info field(#7780)

The MAPC Common Info field carries information that is common to all the MAPC schemes. The format of the MAPC Common Info field is defined in (#7781)Figure 9-aa12 (MAPC Common Info field format).

	MAPC Common Info Length	MAPC Capabilities	MAPC Parameters	AP ID
Octets:	1	2	2	0 or 2

Figure 9-aa12—MAPC Common Info field format

The MAPC Common Info Length field indicates the number of octets in the MAPC Common Info field including one octet for the MAPC Common Info Length field.

The format of the MAPC Capabilities field is defined in Figure 9-aa13 (MAPC Capabilities field format).

Copyright © 2025 IEEE. All rights reserved.
This is an unapproved IEEE Standards Draft, subject to change.

	B0	B1	B2	B3	B4	B5
	AP TB PPDU Response Supported	Co-BF Supported	Co-SR Supported	Co-TDMA Supported	Co-RTWT Supported	Co-CR Supported
Bits:	1	1	1	1	1	1

	B6	B7 B15
	MAPC Security Supported	Reserved
Bits:	1	9

Figure 9-aa13—MAPC Capabilities field format

The AP TB PPDU Response Supported field is set to 1 if the AP supports transmitting a TB PPDU in response to a Trigger frame. Otherwise, the AP TB PPDU Response Supported field is set to 0 to indicate that the AP does not support transmitting a TB PPDU in response to a Trigger frame.

The Co-BF Supported field is set to 1 if the AP supports Co-BF. Otherwise, the Co-BF Supported field is set to 0.

The Co-SR Supported field is set to 1 if the AP supports Co-SR. Otherwise, the Co-SR Supported field is set to 0.

The Co-TDMA Supported field is set to 1 if the AP supports Co-TDMA. Otherwise, the Co-TDMA Supported field is set to 0.

The Co-RTWT Supported field is set to 1 if the AP supports Co-RTWT. Otherwise, the Co-RTWT Supported field is set to 0.

The Co-CR Supported field is set to 1 if the AP supports Co-CR. Otherwise, the Co-CR Supported field is set to 0.

The MAPC Security Supported field is set to 1 if the AP supports MAPC security. Otherwise, the Security Supported field is set to 0. If the MAPC Security Supported field is set to 1 then the Security Profile subelement is included in the MAPC Schemes Info field.

The format of the MAPC Parameters field is defined in Figure 9-aa14 (MAPC Parameters field format).

Copyright © 2025 IEEE. All rights reserved.
This is an unapproved IEEE Standards Draft, subject to change.

	B0	B1	B2	B3	B4	B5
	Co-BF Agreement Establishment Enabled	Co-SR Agreement Establishment Enabled	Co-TDMA Agreement Establishment Enabled	Co-RTWT Agreement Establishment Enabled	Co-CR Agreement Establishment Enabled	Protected Negotiations Required
Bits:	1	1	1	1	1	1

B6 B15
Reserved
10

Figure 9-aa14—MAPC Parameters field format

The Co-BF Agreement Establishment Enabled field is set to 1 if the Co-BF Supported field is set to 1 and the AP has enabled MAPC negotiations for establishing new MAPC agreements for Co-BF. Otherwise, the Co-BF Agreement Establishment Enabled field is set to 0.

The Co-SR Agreement Establishment Enabled field is set to 1 if the Co-SR Supported field is set to 1 and the AP has enabled MAPC negotiations for establishing new MAPC agreements for Co-SR. Otherwise, the Co-SR Agreement Establishment Enabled field is set to 0.

The Co-TDMA Agreement Establishment Enabled field is set to 1 if the Co-TDMA Supported field is set to 1 and the AP has enabled MAPC negotiations for establishing new MAPC agreements for Co-TDMA. Otherwise, the Co-TDMA Agreement Establishment Enabled field is set to 0.

The Co-RTWT Agreement Establishment Enabled field is set to 1 if the Co-RTWT Supported field is set to 1 and the AP has enabled MAPC negotiations for establishing new MAPC agreements for Co-RTWT. Otherwise, the Co-RTWT Agreement Establishment Enabled field is set to 0.

The Co-CR Agreement Establishment Enabled field is set to 1 if the Co-CR Supported field is set to 1 and the AP has enabled MAPC negotiations for establishing new MAPC agreements for Co-CR. Otherwise, the Co-CR Agreement Establishment Enabled field is set to 0.

The AP ID field is used to assign an AP ID to another AP. The AP ID field is optionally included in the MAPC Common Info field of a MAPC element (see (#Ed)Figure 9-aa12 (MAPC Common Info field format)) as defined in 37.15.1.3.2.2 (AP ID assignment).

The Protected Negotiations Required field is set to 1 if the use of the Protected MAPC Negotiation Request frame and the Protected MAPC Negotiation Response frame to perform any MAPC agreement negotiation with the AP is mandatory and is set to 0 if the use of the Protected MAPC Negotiation Request frame and the Protected MAPC Negotiation Response frame to perform any MAPC agreement negotiation with the AP is optional.

9.4.2.355.4 MAPC Schemes Info field

9.4.2.355.4.1 General

The MAPC Schemes Info field carries information specific to one or more MAPC schemes and is optionally present. When the MAPC Schemes Info field is present, it contains one or more subelements.

Copyright © 2025 IEEE. All rights reserved.
This is an unapproved IEEE Standards Draft, subject to change.

(#7786, Ed)The subelement format and ordering of subelements are defined in 9.4.3 (Subelements). The Subelement ID field values for the subelements are shown in Table 9-bb7 (Optional subelement IDs of the MAPC Scheme Info field).

Table 9-bb7—Optional subelement IDs of the MAPC Scheme Info field

Subelement ID	Subelement name	Extensible
0	Per-Scheme Profile	Yes
1	Security Profile	Yes
2-220	Reserved	
221	Vendor Specific	Vendor defined
222-253	Reserved	
254	Fragment	No
255	Reserved	

The format of the Per-Scheme Profile subelement is defined in Figure 9-aa15 (Per-Scheme Profile subelement format).

	Subelement ID	Length	MAPC Scheme Control	MAPC Scheme Parameter Set	MAPC Scheme Request Set
Octets:	1	1	1	variable	variable

Figure 9-aa15—Per-Scheme Profile subelement format

The format of the MAPC Scheme Control field is defined in Figure 9-aa16 (MAPC Scheme Control field format).

	B0 B3	B4 B7
	MAPC Scheme Type	Reserved
Bits:	4	4

Figure 9-aa16—MAPC Scheme Control field format

Copyright © 2025 IEEE. All rights reserved.
This is an unapproved IEEE Standards Draft, subject to change.

The MAPC Scheme Type field indicates a value that identifies a MAPC scheme as defined in Table 9-bb8 (MAPC Scheme Type field values).

Table 9-bb8—MAPC Scheme Type field values

Value	Meaning
0	Co-BF profile
1	Co-SR profile
2	Co-TDMA profile
3	Co-RTWT profile
4	Co-CR profile
5-15	Reserved

The MAPC Schemes Info field contains zero or one Co-BF profile, Co-SR profile, Co-TDMA profile, Co-RTWT profile and Co-CR profile.

The MAPC Scheme Parameter Set field carries parameters specific to the AP for the MAPC scheme indicated by the MAPC Scheme Type field. The MAPC Scheme Parameter Set field is optionally included and it has a format defined for each MAPC scheme in 9.4.2.355.4.2 (Co-BF profile), 9.4.2.355.4.3 (Co-SR profile), 9.4.2.355.4.4 (Co-TDMA profile), 9.4.2.355.4.5 (Co-RTWT profile) and 9.4.2.355.4.6 (Co-CR profile), respectively.

The MAPC Scheme Request Set field is optionally included. When the MAPC element that includes the Per-Scheme Profile subelement is carried in a MAPC Negotiation Request frame, the MAPC Scheme Request Set field is included and carries information related to request(s) for MAPC agreement(s) specific to the MAPC scheme indicated by the MAPC Scheme Type field. When the MAPC element that includes the Per-Scheme Profile subelement is carried in a MAPC Negotiation Response frame, the MAPC Scheme Request Set field is included and carries information related to response(s) (#7789)solicited by request(s) for MAPC agreement(s) specific to the MAPC scheme indicated by the MAPC Scheme Type field. The MAPC Scheme Request Set field is not included when the Per-Scheme Profile subelement is carried in MAPC Discovery Request frame or a MAPC Discovery Response frame. The MAPC Scheme Request Set field carried in a Co-BF, Co-SR, or Co-TDMA profile contains a single MAPC Scheme Request field. The MAPC Scheme Request Set field carried in a Co-RTWT profile contains one or more MAPC Scheme Request fields, each corresponding to an R-TWT schedule.

The format of the MAPC Scheme Request field is defined in Figure 9-aa17 (MAPC Scheme Request field format).

	MAPC Request Control	MAPC Per-Scheme Info	MAPC Request Parameter Set
Octets:	1	0 or 1	variable

Figure 9-aa17—MAPC Scheme Request field format

The MAPC Request Control field format is defined in Figure 9-aa18 (MAPC Request Control field format).

Copyright © 2025 IEEE. All rights reserved.
This is an unapproved IEEE Standards Draft, subject to change.

	B0 B2	B3	B4 B7
	MAPC Operation Type	MAPC Per-Scheme Info Present	Reserved
Bits:	3	1	4

Figure 9-aa18—MAPC Request Control field format

The MAPC Operation Type field indicates the type of operation to be carried out. Table 9-bb9 (MAPC Operation Type field values) shows the values and meaning of the MAPC Operation Type field, and the frame that carries the MAPC element with this MAPC Operation Type value.

Table 9-bb9—MAPC Operation Type field values

Value	Meaning	Contained in
0	Agreement establishment	MAPC Negotiation Request frame
1	Agreement update	MAPC Negotiation Request frame
2	Agreement teardown	MAPC Negotiation Request frame
3	Agreement Accept	MAPC Negotiation Response frame
4	Agreement Reject	MAPC Negotiation Response frame
5	Agreement Alternate	MAPC Negotiation Response frame
6-7	Reserved	

The MAPC Per-Scheme Info Present field is set to 1 when the MAPC Per-Scheme Info field is included. Otherwise, MAPC Per-Scheme Info Present field is set to 0.

The MAPC Per-Scheme Info field carries information specific to the MAPC scheme identified by the MAPC Scheme Type field. The MAPC Per-Scheme Info field is defined for each MAPC scheme in 9.4.2.355.4.2 (Co-BF profile), 9.4.2.355.4.3 (Co-SR profile), 9.4.2.355.4.4 (Co-TDMA profile), 9.4.2.355.4.5 (Co-RTWT profile), and 9.4.2.355.4.6 (Co-CR profile), respectively.

The MAPC Request Parameter Set field carries parameters specific to a request and is optionally included. The format of the MAPC Request Parameter Set field is defined for each MAPC scheme in 9.4.2.355.4.2 (Co-BF profile), 9.4.2.355.4.3 (Co-SR profile), 9.4.2.355.4.4 (Co-TDMA profile), 9.4.2.355.4.5 (Co-RTWT profile), and 9.4.2.355.4.6 (Co-CR profile), respectively. The MAPC Request Parameter Set is included according to the rules defined in 37.15.2 (Procedures for specific multi-AP coordination schemes) for each specific MAPC scheme.

The format of the Security Profile subelement is defined in Figure 9-aa19 (Security Profile subelement format).

The MAPC Schemes Info field contains zero or one Security Profile subelement if the MAPC element is carried in a MAPC Discovery Request frame or a MAPC Discovery Response frame. The MAPC Schemes Info field contains one Security Profile subelement when the MAPC element is carried in a MAPC Authentication frame.(#7794)

Copyright © 2025 IEEE. All rights reserved.
This is an unapproved IEEE Standards Draft, subject to change.

	Subelement ID	Length	RSNE	RSNXE	MAPC Security Info
Octets:	1	2	variable	variable	variable

Figure 9-aa19—Security Profile subelement format

The RSNE field is optional.(#11996) If present, the RSNE field is formatted as defined in 9.4.2.23 (RSNE). The Preauthentication, Joint Multi-band RSNA, PeerKey Enabled, BIP Compact Encapsulation and Extended Key ID for Individually Addressed Frame field in the RSN Capabilities field of the RSNE field are reserved.(#4157, 4158, 7001, 7002,10800, 10801)

The RSNXE field is optional.(#Ed) If present, the RSNXE field is formatted as defined in 9.4.2.240 (RSNXE). And all the fields in RSNXE field are reserved except the Field length field, SAE Hash-to-element field and KEK In PASN field.(#4157, 4158, 7001, 7002, 10800, 10801)

NOTE—The values of the RSNE and the RSNXE fields in the MAPC element might be different from the values of the RSNE and RSNXE advertised by the AP to non-AP STAs(#11997).

The MAPC Security Info field is optional. If present, the MAPC Security Info field(#11997) includes the authentication frame body. If the Authentication Algorithm Number field included in the authentication frame body sets to 10 (MAPC PASN Authentication), the two UHR APs shall complete the MAPC authentication procedure following the rule defined in 12.17 (Multi-AP Coordination Preassociation Security Negotiation).

9.4.2.355.4.2 Co-BF profile

The MAPC Scheme Type field is set to the value for Co-BF as indicated in Table 9-bb8 (MAPC Scheme Type field values).

The MAPC Scheme Parameter Set field of the Co-BF profile is defined in Figure 9-aa20 (MAPC Scheme Parameter Set field of the Co-BF profile format).

	B0 B1	B2 B3	B4	B5 B7
	Number of Supported Sounding Reports	Number of Supported Joint Sounding Reports	2x LTF + 0.8 µs GI Supported	Reserved
Bits:	2	2	1	3

Figure 9-aa20—MAPC Scheme Parameter Set field of the Co-BF profile format

The Number of Supported Sounding Reports field indicates the maximum number of OBSS Sounding Reports that the AP can store for this Co-BF pair that is equal to the value of the field plus 1.

The Number of Supported Joint Sounding Reports field indicates the maximum number of Joint Sounding Reports that the AP can store for this Co-BF pair that is equal to the value of the field plus 1. The value of the Number of Supported Joint Sounding Reports field is not larger than the value of the Number of Supported Sounding Reports field indicated between the same pair of APs.

The 2× LTF + 0.8 µs GI Supported field indicates whether the AP supports the use of 2× LTF + 0.8 µs GI or not while operating in Co-BF with the peer AP with which the Co-BF agreement is being established. The field is set to 1 when 2× LTF + 0.8 µs GI is supported by the AP.

Copyright © 2025 IEEE. All rights reserved.
This is an unapproved IEEE Standards Draft, subject to change.

If the Co-BF profile includes the MAPC Scheme Request Set field, the Co-BF profile includes one MAPC Scheme Request Set field where the MAPC Per-Scheme Info Present field is set to 0, and the MAPC Request Parameter Set field is not included.

9.4.2.355.4.3 Co-SR profile

The MAPC Scheme Type field is set to the value for Co-SR as indicated in Table 9-bb8 (MAPC Scheme Type field values).

The MAPC Scheme Parameter Set field of the Co-SR profile is defined in Figure 9-aa21 (MAPC Scheme Parameter Set field of the Co-SR profile format).

	B0 B5	B6 B7
	Minimum Transmit Power	Reserved
Bits:	6	2

Figure 9-aa21—MAPC Scheme Parameter Set field of the Co-SR profile format

The Minimum Transmit Power field indicates the minimum acceptable transmit power of the AP in Co-SR transmission as Co-SR coordinated AP.

If the Co-SR profile includes the MAPC Scheme Request Set field, the Co-SR profile includes one MAPC Scheme Request Set field where the MAPC Per-Scheme Info Present field is set to 0, and the MAPC Request Parameter Set field is not included.

9.4.2.355.4.4 Co-TDMA profile

The MAPC Scheme Type field is set to the value corresponding to the Co-TDMA profile, as indicated in Table 9-bb8 (MAPC Scheme Type field values).

The MAPC Scheme Parameter Set field is always present in a Co-TDMA profile and carries parameters specific to the AP for the Co-TDMA procedure. The MAPC Scheme Parameter Set field format for Co-TDMA negotiations is defined in Figure 9-aa22 (MAPC Scheme Parameter Set field format for Co-TDMA negotiations).

	Co-TDMA Capabilities(#4243)	Bandwidth Control	BSS Color Information
Octets:	1	2 or 4	1

Figure 9-aa22—MAPC Scheme Parameter Set field format for Co-TDMA negotiations

The Co-TDMA Capabilities field carries the capabilities of an AP related to the Co-TDMA procedure and is defined in Figure 9-aa23 (Co-TDMA Capabilities field format).

Copyright © 2025 IEEE. All rights reserved.
This is an unapproved IEEE Standards Draft, subject to change.

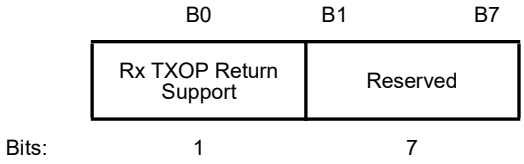

Figure 9-aa23—Co-TDMA Capabilities field format

The Rx TXOP Return Support field is set to 1 if the AP, when operating as a Co-TDMA coordinating AP, supports receiving a TXOP return from a Co-TDMA coordinated AP to which it has allocated a portion of its TXOP; otherwise, it is set to 0.

The format of the Bandwidth Control field of the MAPC Scheme Parameter Set field is defined in Figure 9-aa24 (Bandwidth Control field format), which specifies the bandwidth configuration of the AP.

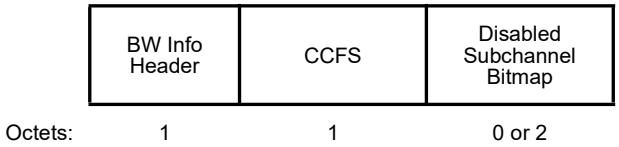

Figure 9-aa24—Bandwidth Control field format

The BW Info Header field is defined in Figure 9-aa25 (BW Info Header field format).

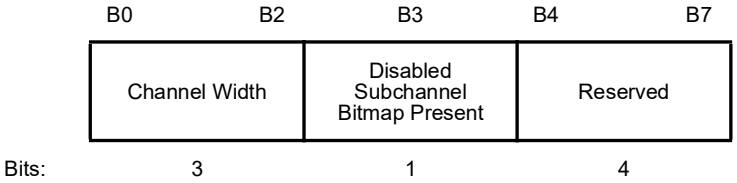

Figure 9-aa25—BW Info Header field format

The Channel Width and CCFS fields are defined in Table 9-bb10 (Channel Width and CCFS fields).

Table 9-bb10—Channel Width and CCFS fields

Field	Definition	Encoding
Channel Width	The BSS bandwidth	Set to 0 for 20 MHz BSS bandwidth Set to 1 for 40 MHz BSS bandwidth Set to 2 for 80 MHz BSS bandwidth Set to 3 for 160 MHz BSS bandwidth Set to 4 for 320 MHz BSS bandwidth Values in the ranges 5 to 7 are reserved.
CCFS	The channel center frequency for a 20, 40, 80, 160, or 320 MHz BSS bandwidth.	For 20, 40, 80, 160 or 320, indicates the channel center frequency index for 20, 40, 80, 160, or 320 MHz channel on which the BSS operates.

Copyright © 2025 IEEE. All rights reserved.
This is an unapproved IEEE Standards Draft, subject to change.

The Disabled Subchannel Bitmap field in the Bandwidth Control field is present if the Disabled Subchannel Bitmap Present field in the BW Info Header field is set to 1 and provides a list of subchannels that are punctured within the BSS bandwidth. Otherwise, the Disabled Subchannel Bitmap field is not present.

The encoding of the Disabled Subchannel Bitmap field in the Bandwidth Control field is the same as that of the Disabled Subchannel Bitmap field defined in the Figure 9-1074k (EHT Operation Information field format).

NOTE—An AP that receives a MAPC Negotiation Request frame can determine the overlapping BSS bandwidth based on the bandwidth configuration information included in the Bandwidth Control field.

The BSS Color Information field in the MAPC Scheme Parameter Set field indicates the BSS color of the transmitting AP, and is defined as in Figure 9-aa26 (BSS Color Information field format).

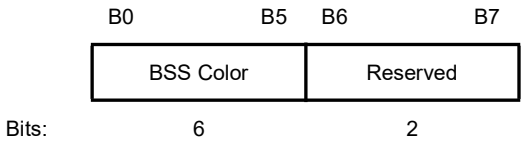

Figure 9-aa26—BSS Color Information field format

The BSS Color field is an unsigned integer whose value is the BSS Color of the BSS corresponding to the transmitting AP.

If the Co-TDMA profile includes the MAPC Scheme Request Set field, the MAPC Scheme Request Set field includes one MAPC Scheme Request field where the MAPC Per-Scheme Info Present field is set to 0, and the MAPC Request Parameter Set field is not included.

9.4.2.355.4.5 Co-RTWT profile

The MAPC Scheme Type field is set to the value for Co-RTWT (#7806)profile as indicated in Table 9-bb8 (MAPC Scheme Type field values).

The MAPC Scheme Parameter Set field is not included.

The MAPC Per-Scheme Info Present field shall be set to 1.

The format of the MAPC Per-Scheme Info field is defined in Figure 9-aa27 (MAPC Per-Scheme Info field of the Co-RTWT profile format)..

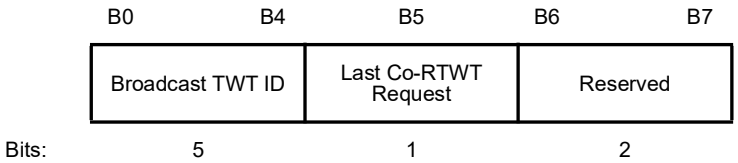

Figure 9-aa27—MAPC Per-Scheme Info field of the Co-RTWT profile format

The Broadcast TWT ID field carries the identifier of the R-TWT schedule.

The Last Co-RTWT Request field is set to 0 to indicate that the Co-RTWT profile carries a subsequent MAPC Scheme Request field that follows this MAPC Scheme Request field. The Last Co-RTWT Request field is set to 1 to indicate that this is the last MAPC Scheme Request field in the Co-RTWT profile.

Copyright © 2025 IEEE. All rights reserved.
This is an unapproved IEEE Standards Draft, subject to change.

The MAPC Request Parameter Set field contains a Co-RTWT Parameter Set field with format defined in Figure 9-aa28 (Co-RTWT Parameter Set field format).

	Target Wake Time	Nominal Minimum TWT Wake Duration	TWT Wake Interval Mantissa	Service Period Info
Octets:	8	1	2	2

Figure 9-aa28— Co-RTWT Parameter Set field format

The Target Wake Time field contains an unsigned integer corresponding to the R-TWT SP start time expressed in terms of the TSF of the Co-RTWT requesting AP.

The Nominal Minimum TWT Wake Duration field indicates the nominal duration of the R-TWT SPs, in units of 256 µs.

The TWT Wake Interval Mantissa field is set to the value of the mantissa of the TWT wake interval value in microseconds, base 2.

The format of the Service Period Info field is defined in Figure 9-aa29 (Service Period Info field format).

	B0 B4	B5 B12	B13 B14	B15
	TWT Wake Interval Exponent	Broadcast TWT Persistence	Restricted TWT Schedule Info	Reserved
Bits:	5	8	2	1

Figure 9-aa29—Service Period Info field format

The TWT Wake Interval Exponent field is set to the value of the exponent of the TWT wake interval value in microseconds, base 2. The TWT wake interval is the time between successive R-TWT SPs start times and is equal to (TWT Wake Interval Mantissa) × $2^{(\text{TWT Wake Interval Exponent})}$.

The Broadcast TWT Persistence field indicates the number of TBTTs of the Co-RTWT requesting AP during which the R-TWT SPs corresponding to this Co-RTWT parameter set are present. The number of TBTTs of the Co-RTWT requesting AP during which the R-TWT SPs are present is equal to the value in the Broadcast TWT Persistence field plus 1, except that the value 255 indicates that the R-TWT SPs are present until explicitly terminated.

The Restricted TWT Schedule Info field is defined in Table 9-369 (Restricted TWT Schedule Info subfield values).

9.4.2.355.4.6 Co-CR profile

The MAPC Scheme Type field is set to the value for Co-CR (#7806)profile as indicated in Table 9-bb8 (MAPC Scheme Type field values).

The MAPC Scheme Request Set field carried in a Co-CR profile contains one or more MAPC Scheme Request fields.

The format of the MAPC Per-Scheme Info field of the Co-CR profile is defined in Figure 9-aa30 (MAPC Per Scheme Info field of the Co-CR profile format).

Copyright © 2025 IEEE. All rights reserved.
This is an unapproved IEEE Standards Draft, subject to change.

	B0 – B4	B5	B6 – B7
	Co-CR Agreement ID	Last Co-CR Request	Reserved
Bits:	5	1	2

Figure 9-aa30— MAPC Per Scheme Info field of the Co-CR profile format

The Co-CR Agreement ID field contains an integer identifying a specific Co-CR agreement. The values 0 and 31 of this field are reserved. The Co-CR Agreement ID field is reserved when the corresponding MAPC element is carried in a MAPC Negotiation Request frame.

The Last Co-CR Request field is set to 0 to indicate that the Co-CR profile carries a subsequent MAPC Scheme Request field that follows this MAPC Scheme Request field. The Last Co-CR Request field is set to 1 to indicate that this is the last MAPC Scheme Request field in the Co-CR profile.

The format of the MAPC Request Parameter Set field contains a Co-CR Parameter Set field with format defined in Figure 9-aa31 (Co-CR Parameter Set field format).

	Control	Operating Class and Channel	Recommendation Periods Information	Recommendation Timeout
Octets:	1	2	0 or 6	0 or 4

Figure 9-aa31—Co-CR Parameter Set field format

The Control field format of the Co-CR Parameter Set field is shown Figure 9-aa32 (Control field format of the Co-CR Parameter Set field).

	B0	B1	B2 – B7
	Recommendation Periods Info Present	Recommendation Timeout Info Present	Reserved
Bits:	1	1	6

Figure 9-aa32—Control field format of the Co-CR Parameter Set field

The Recommendation Periods Info Present subfield in the Control field indicates whether or not the Recommendation Periods Information field is present in the Co-CR Parameter Set field. If the subfield is set to 1, then the Recommendation Periods Information field is present in the Co-CR Parameter Set field; otherwise, it is not present.

The Recommendation Timeout Info Present subfield in the Control field indicates whether or not the Recommendation Timeout field is present in the Co-CR Parameter Set field. If the subfield is set to 1, then the Recommendation Periods Information field is present in the Co-CR Parameter Set field; otherwise, it is not present.

At least one of the Recommendation Periods Info Present field and the Recommendation Timeout Info Present field is equal to 1.

The Operating Class and Channel field is defined in 9.4.1.22 (Operating Class and Channel field).

Copyright © 2025 IEEE. All rights reserved.
This is an unapproved IEEE Standards Draft, subject to change.

The Recommendation Periods Information field describes a series of time windows during which the channel recommendation identified by this parameter set applies. The format of the Recommendation Periods Information field is shown in Figure 9-aa33 (Recommendation Periods Info field format).

	Recommendation Start Time	Recommendation SP Duration	Recommendation Interval Mantissa	Recommendation Interval Exponent
Octets:	2	1	2	1

Figure 9-aa33—Recommendation Periods Info field format

The Recommendation Start Time field contains a positive unsigned integer corresponding to the TSF value of the Co-CR requesting AP indicating the start time of the first Co-CR recommendation service period (SP) in the series of SPs described by this Co-CR Parameter Set field. The lowest bit of the Recommendation Start Time field is set to bit 10 of the corresponding TSF value Co-CR requesting AP (i.e., the field represents bits 10 through 25 of the TSF).

The Recommendation SP Duration field indicates the duration of time, in units of TU, based on the TSF of the transmitter, during which the Co-CR channel recommendation applies.

The Recommendation Interval Mantissa subfield is set to the value of the mantissa of the Recommendation SP interval value in microsecond, base 2, based on the TSF of the transmitter.

The Recommendation Interval Exponent subfield is set to the value of the exponent of the Recommendation SP interval value in microsecond, base 2, based on the TSF of the transmitter.

The Recommendation Timeout field contains an unsigned 32-bit integer, indicating the lifetime of the channel recommendation, in units of TUs, based on the TSF of the transmitter.

9.4.2.356 SMD Information element

The SMD Information element provides the information related to the SMD. The format of the SMD Information element is shown in Figure 9-aa34 (SMD Information element format).

	Element ID	Length	Element ID Extension	SMD Identifier	SMD Capabilities	Timeout Value
Octets:	1	1	1	6	1	2

Figure 9-aa34—SMD Information element format

The Element ID, Length, and Element ID Extension fields are defined in 9.4.2.1 (General).

The SMD Identifier field indicates a unique identifier for the SMD and is in the format of a 48-bit MAC address.

The format of the SMD Capabilities field is defined in Figure 9-aa35 (SMD Capabilities field format).

Copyright © 2025 IEEE. All rights reserved.
This is an unapproved IEEE Standards Draft, subject to change.

	B0	B1 B3	B4	B5	B6 B7
	DL Data Forwarding	Max Number Of Prepared Target AP MLDs	SMD Type	PTK Mode	Reserved
Bits:	1	3	1	1	2

Figure 9-aa35—SMD Capabilities field format

The DL Data Forwarding field is set to 1 if forwarding of buffered DL data of a non-AP MLD from the current AP MLD to a target AP MLD is supported by the SMD and is set to 0 otherwise.

The Max Number Of Prepared Target AP MLDs field(#6031)(#6871) indicates the maximum number of prepared target AP MLDs.

The SMD Type field indicates the type of the SMD. The SMD Type field is set to 0 when per-AP MLD MAC SAPs are used in the SMD and is set to 1 when one MAC SAP is used in the SMD.

The PTK Mode field indicates the protection mode for the communications between the non-AP MLD and its current AP MLD and between the non-AP MLD and a target AP MLD. The field is set to 0 if the SMD-ME uses the Per-SMD PTK and is set to 1 if the SMD-ME uses the Per-AP MLD PTK (see (37.16.1 (General)).

The Timeout Value field is set to the timeout between the ST preparation response and ST execution request in units of TU that applies across all the AP MLDs managed by the SMD-ME of the SMD.

9.4.2.357 SMD BSS Transition Parameters element

The SMD BSS Transition Parameters element contains parameters related to the SMD BSS transition (see 37.16 (Seamless mobility domain (SMD) BSS transition(#9915))). The format of the SMD BSS Transition Parameters element is defined in Figure 9-aa36 (SMD BSS Transition Parameters element format).

	Element ID	Length	Element ID Extension	ST Info
Octets:	1	1	1	variable

Figure 9-aa36— SMD BSS Transition Parameters element format

The Element ID, Length, and Element ID Extension fields are defined in 9.4.2.1 (General).

The ST Info field carries the ST parameters and its format depends on the frame that carries the SMD BSS Transition Parameters element (i.e., ST preparation request, ST preparation response, ST execution request, and ST execution response).

If the SMD BSS Transition Parameters element is carried in an ST preparation request, the format of the ST Info field is defined in Figure 9-aa37 (ST Info field format in an ST preparation request).

	Common Info	Listen Interval	Presence Bitmap	SCS List
Octets:	1	2	1	variable

Figure 9-aa37—ST Info field format in an ST preparation request

Copyright © 2025 IEEE. All rights reserved.
This is an unapproved IEEE Standards Draft, subject to change.

The Common Info field is defined in Figure 9-aa38 (Common Info field format in an ST preparation request).

	B0	B1(#8598)	B2(#8598) B7
	Request DL SN Not Transferred	Request UL SN Not Transferred	Reserved
Bits:	1	1	6

Figure 9-aa38—Common Info field format in an ST preparation request

The Request DL SN Not Transferred field is set to 1 if the non-AP MLD requests that the next SN for all TIDs are not to be transferred to the target AP MLD. Otherwise, the Request DL SN Not Transferred field is set to 0.

The Request UL SN Not Transferred field is set to 1 if the non-AP MLD requests that the latest SN that has been passed up for all TIDs are not to be transferred to the target AP MLD. Otherwise, the Request UL SN Not Transferred field is set to 0.

The Listen Interval field has the same definition as the Listen Interval field (see 9.4.1.6 (Listen Interval)).

The Presence Bitmap field is defined in Figure 9-aa39 (Presence Bitmap field format in an ST preparation request).

	B0	B1 B7
	SCS List Present	Reserved
Bits:	1	7

Figure 9-aa39—Presence Bitmap field format in an ST preparation request

The SCS List Present field is set to 1 if the SCS List field is present in the ST Info field. Otherwise, the SCS List Present field is set to 0.

The SCS List field is defined in Figure 9-aa40 (SCS List field format).

	Number Of SCS IDs	SCS Info
Octets:	1	variable

Figure 9-aa40—SCS List field format

The Number Of SCS IDs field is set to the number of SCS ID fields included in the SCS Info field of the SCS List field. The value 0 is reserved.

The SCS Info field contains one or more SCS ID fields.

	SCS ID
Octets:	1

Figure 9-aa41—SCS ID field format

Copyright © 2025 IEEE. All rights reserved.
This is an unapproved IEEE Standards Draft, subject to change.

The SCS ID field is set to the SCS identifier of the SCS flow the non-AP MLD requests a target AP MLD to prioritize (see 37.16.5.2 (Target links preparation)) if the target AP MLD cannot accommodate all the SCS flows for the non-AP MLD. The SCS IDs are listed in order of decreasing priority.

If the SMD BSS Transition Parameters element is carried in an ST preparation response, the format of the ST Info field is defined in Figure 9-aa42 (ST Info field format in an ST preparation response).

	Status Code	Reserved	Presence Bitmap	AID	DL BA Info	UL BA Info	SCS List
Octets:	2	1	1	0 or 2	variable	variable	variable

Figure 9-aa42—ST Info field format in an ST preparation response

The Status Code field is defined in 9.4.1.9 (Status Code field)(#6310).

The Presence Bitmap field is defined in Figure 9-aa43 (Presence Bitmap field format in an ST preparation response).

	B0	B1	B2	B3	B4 B7
	AID Present	DL BA Info Present	UL BA Info Present	SCS List Present	Reserved
Bits:	1	1	1	1	4

Figure 9-aa43—Presence Bitmap field format in an ST preparation response

The AID Present field is set to 1 if the AID field is present in the ST Info field. Otherwise, the AID Present field is set to 0.

The DL BA Info Present field is set to 1 if the DL BA Info field is present in the ST Info field. Otherwise, the DL BA Info Present field is set to 0.

The UL BA Info Present field is set to 1 if the UL BA Info field is present in the ST Info field. Otherwise, the UL BA Info Present field is set to 0.

The SCS List Present field is set to 1 if the SCS List field is present in the ST Info field. Otherwise, the SCS List Present field is set to 0.

(#9010)If the Status Code is set to REJECTED_ST_PREP, then the AID Present field, the DL BA Info Present field, the UL BA Info Present field, and the SCS List Present field are set to 0.

The AID field is set to the AID assigned to the non-AP MLD by the target AP MLD.

The DL BA Info field is defined in Figure 9-aa44 (DL BA Info field format).

	B0 B7	
	DL TID Bitmap	DL BA Parameters Info
Bits:	8	variable

Figure 9-aa44—DL BA Info field format

Copyright © 2025 IEEE. All rights reserved.
This is an unapproved IEEE Standards Draft, subject to change.

The DL TID Bitmap field indicates which TIDs are present in the DL BA Info field (i.e., the field identifies the TIDs for which the block ack parameters are provided in the DL BA Parameters Info field). A value of 1 in bit position *n* of the TID Bitmap field indicates that the block ack parameters corresponding to TID *n* is present in the DL BA Info field.

The DL BA Parameters Info field contains one or more Extended BA Parameters Info fields. One for each TID that is indicated in the DL TID Bitmap field.

The Extended BA Parameters Info field is defined in Figure 9-aa45 (Extended BA Parameters Info field format).

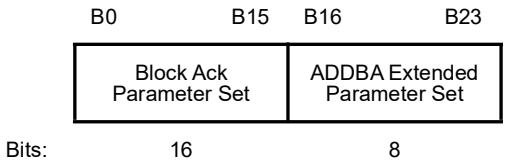

Figure 9-aa45—Extended BA Parameters Info field format

The Block Ack Parameter Set field is defined in 9.4.1.13 (Block Ack Parameter Set field).

The ADDBA Extended Parameter Set field is defined in 9.4.2.138 (ADDBA Extension element).

The UL BA Info field is defined in Figure 9-aa46 (UL BA Info field format).

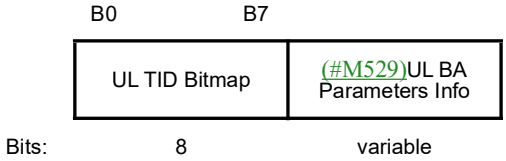

Figure 9-aa46—UL BA Info field format

The UL TID Bitmap field indicates which TIDs are present in the UL BA Info field (i.e., the field identifies the TIDs for which the block ack parameters are provided in the UL BA Parameters Info field). A value of 1 in bit position n of the UL TID Bitmap field indicates that the block ack parameters corresponding to TID *n* is present in the UL BA Info field.

The UL BA Parameters Info field contains one or more Extended BA Parameters Info fields. One for each TID that is indicated in the UL TID Bitmap field(#5426).

The SCS List field is defined in Figure 9-aa40 (SCS List field format) and is present in the ST Info field if the SCS List Present bit in the Presence Bitmap field is set to 1, otherwise it is not present.

The Number Of SCS IDs field is set to the number of SCS ID fields included in the SCS List field. The value 0 is reserved.

The *n*th SCS ID field is set to the SCS ID of the *n*th SCS flow(#6978) accepted by the target AP MLD.

If the SMD BSS Transition Parameters element is carried in an ST execution request, the format of the ST Info field is defined in Figure 9-aa47 (ST Info field format in an ST execution request).

Copyright © 2025 IEEE. All rights reserved.
This is an unapproved IEEE Standards Draft, subject to change.

	Reserved	Presence Bitmap	DL TID Bitmap
Octets:	1	1	1

Figure 9-aa47— ST Info field format in an ST execution request

The Presence Bitmap field is defined in Figure 9-aa48 (Presence Bitmap field of the ST Info field format in an ST execution request).

	B0	B1 B7
	DL TID Bitmap Present	Reserved
Bits:	1(#8599)(#4516)(#4592)(#5672)	7

Figure 9-aa48—Presence Bitmap field of the ST Info field format in an ST execution request

The DL TID Bitmap Present field is set to 1 if the DL TID Bitmap field is present in this element. Otherwise, this field is set to 0.

The DL TID Bitmap field indicates for which TID(s) the non-AP MLD requests to receive the indication of DL traffic status information of the TID (indicating any DL traffic buffered or not for the TID). The non-AP MLD sets the bit position corresponding to a(#12472) the TID to 1 to indicate the non-AP MLD is to receive DL traffic status information of that TID.

If the SMD BSS Transition Parameters element is carried in an ST execution response, the format of the ST Info field is defined in Figure 9-aa49 (ST Info field format in an ST execution response).

	Status Code	Reserved	Presence Bitmap	Nominal Maximum DL Draining Period Duration	Latest UL SN
Octets:	2	1	1	0 or 2	variable

Figure 9-aa49— ST Info field format in an ST execution response

The Status Code field is defined in 9.4.1.9 (Status Code field)(#6313).

The Presence Bitmap field is defined in Figure 9-aa50 (Presence Bitmap field format of the ST Info field in an ST execution response(#5427)).

Copyright © 2025 IEEE. All rights reserved.
This is an unapproved IEEE Standards Draft, subject to change.

	B0	B1	B2 B7
	Nominal Maximum DL Draining Period Duration Present(#6979)(#7254)(#11422)(#5673)	Latest UL SN Present	Reserved
Bits:	1	1	6

Figure 9-aa50—Presence Bitmap field format of the ST Info field in an ST execution response(#5427)

The Nominal Maximum DL Draining Period Duration Present field is set to 1 if the Nominal Maximum DL Draining Period Duration field is included in the ST Info field. Otherwise, this field is set to 0.

The Latest UL SN Present field is set to 1 if the Latest UL SN field is included in the ST Info field. This field is set to 1 if the Status Code field is SUCCESS. Otherwise, this field is set to 0.

The Nominal Maximum DL Draining Period Duration field is set to the value of the nominal maximum DL draining period duration(#6048) used for ST in units of TU (see 37.16.6 (SMD BSS transition execution procedure via the current AP MLD)). The value 0 is reserved.

The Latest UL SN field is defined in Figure 9-aa51 (Latest UL SN field format).

	B0 B7					
	TID Bitmap	Latest UL SN For TID 0	Latest UL SN For TID 1	...	Latest UL SN For TID 7	Reserved
Bits:	8	0 or 12	0 or 12	...	0 or 12	0 to 7

Figure 9-aa51—Latest UL SN field format

The TID Bitmap field indicates which TIDs are present in this subelement. A value of 1 in bit position *n* of the TID Bitmap field indicates the latest UL SN information for TID n is present in the Next DL SN field.

The Latest UL SN For TID n field contains the latest SN that has been passed up (and will be passed up) to the next MAC process for the existing UL Block Ack agreement corresponding to TID *n* by the current AP MLD.

9.4.2.358 Extended Channel Usage element

The format of the Extended Channel Usage element is shown in Figure 9-aa52 (Extended Channel Usage element format).

	Element ID	Length	Element ID Extension	Channel Usage Parameter Sets
Octets:	1	1	1	variable

Figure 9-aa52—Extended Channel Usage element format

The Element ID, Length, and Element ID Extension fields are defined in 9.4.2.1 (General).

Copyright © 2025 IEEE. All rights reserved.
This is an unapproved IEEE Standards Draft, subject to change.

The Channel Usage Parameter Sets field in the Extended Channel Usage element may contain one or more Channel Usage Parameter Set field(s). The format of the Channel Usage Parameter Set field is shown in Figure 9-aa53 (Channel Usage Parameter Set field format).

	Usage Mode	Operating Class and Channel	Presence Indicator	Recommendation Periods Information	Recommendation Timeout
Octets:	1	2	1	0 or 6	0 or 4

Figure 9-aa53—Channel Usage Parameter Set field format

The encoding of the Usage Mode field in the Channel Usage Parameter Set field is shown in Table 9-bb11 (Usage Mode field encoding).

Table 9-bb11—Usage Mode field encoding

Value	Usage Mode
0-5	Reserved
6	Channel-usage-aidable BSS that has coordinated with one or more neighboring BSS in providing the channel recommendation identified by the Operating Class and Channel field of the corresponding Channel Usage Parameter Set field.
7-254	Reserved
255	Unknown request

The Operating Class and Channel field is defined in 9.4.1.22 (Operating Class and Channel field).

The Presence Indicator field format of the Channel Usage Parameter Set field is shown in Figure 9-aa54 (Presence Indicator field).

	B0	B1	B2 B7
	Recommendation Periods Info Present	Recommendation Timeout Info Present	Reserved
Bits:	1	1	6

Figure 9-aa54—Presence Indicator field

The Recommendation Periods Info Present subfield in the Presence Indicator field indicates whether or not the Recommendation Periods Information field is present in the corresponding Channel Usage Parameter Set field. If the subfield is set to 1, then the Recommendation Periods Information field is present in the Channel Usage Parameter Set; otherwise, it is not present.

The Recommendation Timeout Info Present subfield indicates whether or not the Recommendation Timeout field is present in the Channel Usage Parameter Set field. If the subfield is set to 1, then the

Copyright © 2025 IEEE. All rights reserved.
This is an unapproved IEEE Standards Draft, subject to change.

Recommendation Timeout field is present in the corresponding Channel Usage Parameter Set; otherwise, it is not present.

The Recommendation Periods Information field describes a series of time windows during which the channel recommendation identified by this parameter set applies. The format of the Recommendation Periods Information field is shown in Figure 9-aa55 (Recommendation Periods Information field format).

	Recommendation Start Time	Recommendation SP Duration	Recommendation Interval Mantissa	Recommendation Interval Exponent
Octets:	2	1	2	1

Figure 9-aa55—Recommendation Periods Information field format

The Recommendation Start Time field contains a positive unsigned integer corresponding to the TSF value of the AP advertising this element indicating the start time of the first service period (SP) in the series of SPs described by this Extended Channel Usage element. The lowest bit of the Recommendation Start Time field is set to bit 10 of the corresponding TSF value of the advertising AP (i.e., the field represents bits 10 through 25 of the TSF).

The Recommendation SP Duration field indicates the duration of time, in units of TU of the TSF of the transmitter, during which the channel recommendation advertised by this channel usage parameter set applies.

The Recommendation Interval Mantissa subfield is set to the value of the mantissa of the Recommendation SP interval value in microsecond, base 2, based on the TSF of the transmitter.

The Recommendation Interval Exponent subfield is set to the value of the exponent of the Recommendation SP interval value in microsecond, base 2, based on the TSF of the transmitter.

The Recommendation Timeout field in the Channel Usage Parameter Set field contains an unsigned 32-bit integer, indicating the lifetime of the channel recommendation, in units of TUs, based on the TSF of the transmitter.

9.4.2.359 UHR Mode Change element

9.4.2.359.1 General(#Ed)

The format of the UHR Mode Change element is shown in Figure 9-aa56 (UHR Mode Change element format).

	Element ID	Length	Element ID Extension	Mode Tuple List
Octets:	1	1	1	variable

Figure 9-aa56— UHR Mode Change element format

The Mode Tuple List field contains one or more Mode Tuple fields.

The Mode Tuple field is defined in Figure 9-aa57 (Mode Tuple field format).

Copyright © 2025 IEEE. All rights reserved.
This is an unapproved IEEE Standards Draft, subject to change.

	B0 B5	B6	B7	B8 B11	B12 B15	
	Mode ID	Mode Enable	Mode Update	Mode Length	Mode Specific Control	Mode Specific Parameters
Bits:	6	1	1	4	4	variable

Figure 9-aa57—Mode Tuple field format

The Mode ID field contains the identifier for the UHR mode associated with the mode tuple. The encoding of this field is defined in Table 9-bb12 (Encoding of the Mode ID field).

Table 9-bb12—Encoding of the Mode ID field

Value	Mode
0	DPS
1	NPCA
2	DUO
3	DSO
4	P-EDCA
5	ELR Reception
6	AOM
7	LLI
8	Co-BF
9	Co-SR
10	EMLSR
11	DBE
12-63	Reserved

The Mode Enable field indicates whether the non-AP STA is requesting to enable or disable the mode identified by the Mode ID. The field is set to 1 if the non-AP STA is requesting to enable the mode and is set to 0 if the non-AP STA is requesting to disable the mode.

The Mode Update field indicates whether the non-AP STA is requesting to update the parameters of an already enabled mode. The field is set to 1 if the non-AP STA is requesting to update the parameters of an already enabled mode and it is set to 0 otherwise. The field is reserved if the Mode Enable field is set to 0.

The Mode Length field indicates the number of octets in the Mode Specific(#4616, 5675, 8280, 8647, 8669, 9856) Parameters field.

The Mode Length, Mode Specific Control, and Mode Specific Parameters fields are not included if the Mode Enable field is set to 0 or the value in the Mode ID field corresponds to a mode without parameters.

The definition of the Mode Specific Control field and the Mode Specific Parameters field depends on the value of the Mode ID field for that mode tuple. The Mode Specific Parameters field is described in the subclauses below.

Copyright © 2025 IEEE. All rights reserved.
This is an unapproved IEEE Standards Draft, subject to change.

9.4.2.359.2 Mode Specific Parameters for DPS

When the value of the Mode ID field is 0,

— the Mode Tuple field corresponds to DPS, and

— the Mode Specific Control field is reserved, and

— the Mode Specific Parameters field carries the parameters for DPS.

The Mode Specific Parameters field for DPS and the encoding of fields in the Mode Specific Parameters field for DPS is the same as the DPS Operation Parameters field defined in 9.4.1.87 (DPS Operation Parameters field(#Ed)).

NOTE—Even if a non-AP STA intends to update a subset of parameters for DPS mode, the non-AP STA provides all parameters.

9.4.2.359.3 Mode Specific Parameters for NPCA

(#4095, #6786)When the value of the Mode ID field is 1,

— the Mode Tuple field corresponds to NPCA, and

— the Mode Specific Control field is reserved, and

— the Mode Specific Parameters field carries the parameters for NPCA.

The Mode Specific Parameters field for NPCA is defined in Figure 9-aa58 (Mode Specific Parameters field for NPCA).

	B0 B5	B6 B11	B12 B15
	NPCA Switch(#4830, 5484, 8300) Delay	NPCA Switch Back Delay	Reserved
Bits:	6	6	4

Figure 9-aa58—Mode Specific Parameters field for NPCA

The encoding of fields in the Mode Specific Parameters field for NPCA is the same as the encoding of the corresponding fields in the NPCA Operation Parameters field defined in 9.4.2.353 (UHR Operation element).

NOTE—Even if a non-AP STA intends to update a subset of parameters for NPCA mode, the non-AP STA provides all parameters.

9.4.2.359.4 Mode Specific Parameters for DUO

(#4096)When the value of the Mode ID field is 2,

— the Mode Tuple field corresponds to DUO, and

— the Mode Update field is reserved, and

— the Mode Specific Control field is reserved, and

— the Mode Specific Parameters field is not present.

9.4.2.359.5 Mode-specific parameters for DSO(#5237, 5698, 6699, 6700, 7713, 7724, 10577)

When the value of the Mode ID field is 3,

Copyright © 2025 IEEE. All rights reserved.
This is an unapproved IEEE Standards Draft, subject to change.

— the Mode Tuple field corresponds to DSO, and
— the Mode Specific Control field is reserved, and
— the Mode Specific Parameters field carries the parameters for DSO.

The Mode Specific Parameters field for DSO is defined in Figure 9-aa59 (Mode Specific Parameters field for DSO).

	B0 B5	B6 B11	B12 B13	B14 B15
	DSO Padding Delay	DSO Switch Back Delay	Preferred 80 MHz DSO Subband	Reserved
Bits:	6	6	2	2

Figure 9-aa59—Mode Specific Parameters field for DSO

The DSO Padding Delay field indicates the minimum MAC padding duration, in units of 4 µs, that a DSO non-AP STA requires in an ICF to switch from its primary subband to its DSO subband.

The DSO Switch Back Delay field indicates the time, in units of 4 µs, required by the DSO non-AP STA to switch from its DSO subband to its primary subband.

The Preferred 80 MHz DSO Subband field indicates the DSO non-AP STA's preferred 80 MHz DSO subband when the AP's BSS bandwidth is 320 MHz and the non-AP STA's operating bandwidth is 80 MHz; this field is reserved for all other cases. The value of this field specifies the position of the preferred 80 MHz DSO subband within the 320 MHz BSS bandwidth, where a value of 0 corresponds to the 80 MHz DSO subband lowest in frequency, 1 corresponds to the 80 MHz DSO subband next higher in frequency, 2 corresponds to 80 MHz DSO subband highest in frequency, and 3 is reserved.

9.4.2.359.6 Mode Specific Parameters for P-EDCA

(#4097)When the value of the Mode ID field is 4,
— the Mode Tuple field corresponds to P-EDCA, and
— the Mode Update field is reserved, and
— the Mode Specific Control field is reserved, and
— the Mode Specific Parameters field is not present.

9.4.2.359.7 Mode Specific Parameters for ELR Reception

(#4098)When the value of the Mode ID field is 5,
— the Mode Tuple field corresponds to ELR Reception, and
— the Mode Update field is reserved, and
— the Mode Specific Control field is reserved, and
— the Mode Specific Parameters field is not present.

9.4.2.359.8 Mode Specific Parameters for AOM

(#4099)When the value of the Mode ID field is 6,
— the Mode Tuple field corresponds to AOM, and
— the Mode Specific Control field is reserved, and
— the Mode Specific Parameters field carries the parameters for AOM.

Copyright © 2025 IEEE. All rights reserved.
This is an unapproved IEEE Standards Draft, subject to change.

NOTE—Even if an AOM STA intends to update a subset of parameters for AOM, the AOM STA provides all parameters.

The Mode Specific Parameters field for adaptive operation mode (AOM) provides AOM parameters and has the format that is shown in Figure 9-aa60 (Mode Specific Parameters field for AOM).

	B0–B11	B12–B23	B24–B28	B29–B32	B33–B36
	Maximum Rx PPDU Duration	Maximum Tx PPDU Duration	Maximum MCS	Maximum NSS	Maximum Bandwidth
Bits:	12	12	5	4	4

	B37	B38	B39–B54	B55
	LDPC Mode Suspend	HT-Immediate BA Suspend	Disabled Subchannel Bitmap	Reserved
Bits:	1	1	16	1

Figure 9-aa60—Mode Specific Parameters field for AOM

The Maximum Rx PPDU Duration field indicates the maximum PPDU duration, in units of 4 microseconds, that is supported by the AOM STA for reception of PPDUs. The Maximum Rx PPDU Duration field indicates a value that is greater than or equal to 24 µs and less than or equal to 5484 µs for UHR STAs.

The Maximum Tx PPDU Duration field indicates the maximum PPDU duration, in units of 4 microseconds, that is supported by the AOM STA for transmission of TB PPDUs. The Maximum Tx PPDU Duration field indicates a value that is greater than or equal to 24 µs and less than or equal to 5484 µs for UHR STAs.

The Maximum MCS field indicates the maximum value of the MCS is supported by the AOM STA for both reception of PPDUs and transmission of TB PPDUs. The Maximum MCS field is encoded as follows:

— 0 indicates support for MCS 0 to 7.

— 1 indicates support for MCS 0 to 9.

— 2 indicates support for MCS 0 to 11.

— 3 indicates support for MCS 0 to 13.

The Maximum NSS field indicates the maximum number of spatial streams that is supported by the AOM STA for both reception of PPDUs and transmission of TB PPDUs.

The Maximum Bandwidth field indicates the operating channel width supported by the AOM STA for both reception of PPDUs and transmission of TB PPDUs. The Maximum Bandwidth field is set to 0 for primary 20 MHz, 1 for primary 40 MHz, 2 for primary 80 MHz, and 3 for primary 160 MHz, and 4 for 320 MHz.

The LDPC Mode Suspend field indicates whether the LDPC mode support by the AOM STA for both reception of PPDUs and transmission of TB PPDUs is suspended or not. The LDPC Mode Suspend(#8065) field is set to 1 if LDPC is suspended; set to 0 if LDPC is not suspended.

The HT-Immediate BA Suspend field indicates whether all HT-immediate block ack agreements for which the AOM STA is the recipient of the block ack agreement, are suspended or not. The HT-Immediate BA Mode Suspend field is set to 1 if all HT-immediate block ack agreements are suspended; and is set to 0 if all existing HT-immediate blockack agreements are not suspended.

Copyright © 2025 IEEE. All rights reserved.
This is an unapproved IEEE Standards Draft, subject to change.

The Disabled Subchannel Bitmap field indicates whether one or more of the 20 MHz subchannels that lie within the BSS operating channel width are enabled or disabled for both reception and transmission of PPDUs. The Disabled Subchannel Bitmap field is a 16-bit bitmap where the lowest numbered bit corresponds to the 20 MHz subchannel that lies within (#4813)operating channel width and is the lowest in frequency of the set of all 20 MHz subchannels within operating channel width. Each successive bit in the bitmap corresponds to the next higher frequency 20 MHz subchannel. A bit in the bitmap that lies within operating channel width is set to 1 to indicate that the corresponding 20 MHz subchannel is punctured and is set to 0 to indicate that the corresponding 20 MHz subchannel is not punctured. A bit in the bitmap that falls outside of the operating channel width is reserved.

9.4.2.359.9 Mode Specific Parameters for LLI

(#4100)When the value of the Mode ID field is 7,

— the Mode Tuple field corresponds to LLI, and

— the Mode Update field is reserved, and

— the Mode Specific Control field is reserved, and

— the Mode Specific Parameters field is not present.

9.4.2.359.10 Mode Specific Parameters for Co-BF

(#4101)When the value of the Mode ID field is 8,

— the Mode Tuple field corresponds to Co-BF, and

— the Mode Update field is reserved, and

— the Mode Specific Control field is reserved, and

— the Mode Specific Parameters field is not present.

9.4.2.359.11 Mode Specific Parameters for Co-SR

(#4102)When the value of the Mode ID field is 9,

— the Mode Tuple field corresponds to Co-SR, and

— the Mode Update field is reserved, and

— the Mode Specific Control field is reserved, and

— the Mode Specific Parameters field is not present.

9.4.2.359.12 Mode Specific Parameters for EMLSR

(#4103)When the value of the Mode ID field is 10,

— the Mode Tuple field corresponds to EMLSR and

— the Mode Specific Control field is reserved, and

The Mode Specific Parameters field for EMLSR is defined in Figure 9-aa61 (Mode Specific Parameters field for EMLSR).

The EMLSR Link Bitmap field indicates the subset of the enabled links that is used by a UHR non-AP MLD in the EMLSR mode. The bit position *i* of the EMLSR Link Bitmap field corresponds to the link with the Link ID field equal to *i* and is set to 1 to indicate that the link is used by the UHR non-AP MLD for the EMLSR mode and is a member of the EMLSR link(s); otherwise, the bit position is set to 0.

Copyright © 2025 IEEE. All rights reserved.
This is an unapproved IEEE Standards Draft, subject to change.

	B0 B15	B16 B21	B22 B27	B28	B29 B31
	EMLSR Link Bitmap	EMLSR Padding Delay	EMLSR Transition Delay	In-Device Coexistence Activities	Reserved
Bits:	16	6	6	1	3

Figure 9-aa61—Mode Specific Parameters field for EMLSR

The EMLSR Padding Delay field indicates the minimum MAC padding duration of the ICF(#5908) requested by the UHR non-AP MLD as defined in 35.5.2.2.3 (Padding for a Trigger frame) starting from 0 µs and in units of 4 µs.

The EMLSR Transition Delay field indicates the transition delay time needed by a non-AP MLD to switch from exchanging PPDUs on one of the enabled link(s) to the listening operation on the enabled link(s) in units of 4 µs.

The In-Device Coexistence Activities field indicates whether the non-AP MLD has in-device coexistence activities on its EMLSR link(s). When DUO is supported on all of the EMLSR link(s) indicated by the EMLSR Link Bitmap at the APs, the field is not used. When DUO is not supported on one or more EMLSR Link(s), the field is set to 1 to indicate the non-AP MLD has in-device coexistence activities on the EMLSR link(s) on which DUO is not supported, and set to 0 to indicate the non-AP MLD has no, or does not know whether it has, in-device coexistence activities on the EMLSR link(s) on which DUO is not supported, and the field is ignored by the AP on the EMLSR Link(s) on which DUO is supported. When included in a frame transmitted by an AP affiliated with an AP MLD, the In-device Coexistence Activities field is reserved.

NOTE—Even if a non-AP STA intends to update a subset of parameters for EMLSR, the non-AP STA provides all parameters.

9.4.2.359.13 Mode Specific Parameters for DBE

(#4104)When the value of the Mode ID field is 11,

— the Mode Tuple field corresponds to DBE, and

— the Mode Specific Control field is reserved, and

— the Mode Specific Parameters field is not present.

9.4.2.360 UHR Parameters Update element

9.4.2.360.1 General(#Ed)

The format of the UHR Parameters Update element is shown in Figure 9-aa62 (UHR Parameters Update element format).

	Element ID	Length	Element ID Extension	Countdown Timer	Mode Tuple List
Octets:	1	1	1	1	variable

Figure 9-aa62— UHR Parameters Update element format

The Countdown Timer field is set to the number of TBTTs until the TBTT at which the update(s) indicated in the UHR Parameters Update element take effect at the AP corresponding to the element. The Countdown Timer field value 1 indicates that the update(s) takes effect at the next TBTT. A Countdown Timer field

Copyright © 2025 IEEE. All rights reserved.
This is an unapproved IEEE Standards Draft, subject to change.

value greater than 127 indicates that the update(s) indicated in the element have already taken effect. If the Countdown Timer field is set to a value greater than 127, the update(s) took effect at the TBTT in the past given by the Countdown Timer field minus 127.

The Mode Tuple List field contains one or more Mode Tuple fields.

The Mode Tuple field is defined in Figure 9-aa63 (Mode Tuple field format).

	B0 – B5	B6	B7	B8 – B15	
	Mode ID	Mode Enable	Mode Update	Mode Length	Mode Specific Parameters
Bits:	6	1	1	8	variable

Figure 9-aa63— Mode Tuple field format

The Mode ID field contains the identifier for the UHR mode associated with the mode tuple. The encoding of this field is defined in Table 9-bb13 (Encoding of the Mode ID field).

Table 9-bb13— Encoding of the Mode ID field

Value	Mode
0	DPS
1	NPCA
2	DUO
3	P-EDCA
4	DBE
5	AP PUO
6	ELR Reception
7-63	Reserved

The Mode Enable field indicates whether the AP intends to enable or disable the mode identified by the Mode ID field at the TBTT indicated in the Countdown Timer field. The field is set to 1 if the AP intends to enable the mode and is set to 0 if the AP intends to disable the mode.

The Mode Update field indicates whether the AP intends to update the parameters of an already enabled mode. The field is set to 1 if the AP intends to update the parameters of an already enabled mode and it is set to 0 otherwise. The field is reserved if the Mode Enable field is set to 0.

The Mode Length field indicates the number of octets in the Mode Specific(#4617, 8675, 9000) Parameters field.

The Mode Length and Mode Specific Parameters fields are not included if the Mode Enable field is set to 0 or the value in the Mode ID field corresponds to a mode without parameters.

The definition of the Mode Specific Parameters field depends on the value of the Mode ID field for that mode tuple. The Mode Specific Parameters field is described in the subclauses below.

Copyright © 2025 IEEE. All rights reserved.
This is an unapproved IEEE Standards Draft, subject to change.

9.4.2.360.2 Mode Specific Parameters for DPS

When the value of the Mode ID field is 0,

— the Mode Tuple field corresponds to DPS, and

— the Mode Specific Parameters field carries the parameters for DPS.

The Mode Specific Parameters field for DPS and the encoding of fields in the Mode Specific Parameters field for DPS is the same as the DPS Operation Parameters field defined in 9.4.1.87 (DPS Operation Parameters field(#Ed)).

NOTE—An AP that is not a mobile AP(#8678) does not carry a Mode Tuple field with the Mode ID field set to 0.

9.4.2.360.3 Mode Specific Parameters for NPCA

When the value of the Mode ID field is 1,

— the Mode Tuple field corresponds to NPCA, and

— the Mode Specific Parameters field carries the parameters for NPCA.

The Mode Specific Parameters field for NPCA is defined in Figure 9-aa64 (Mode Specific Parameters field for NPCA format).(#4831, 4248, 6685, 7631, 11423, 11855)

	B0 B7	B8 B11	B12 B17	B18 B23	B24 B25
	NPCA Primary Channel	NPCA Minimum Duration Threshold	NPCA Switch Delay	NPCA Switch Back Delay	Initial NPCA QSRC
Bits:	8	4	6	6	2

	B26	B27	B28 B31	B32 B47
	MOPLEN NPCA	NPCA Disabled Subchannel Bitmap Present	Reserved	NPCA Disabled Subchannel Bitmap
Bits:	1	1	4	0 or 16

Figure 9-aa64— Mode Specific Parameters field for NPCA format

The encoding of fields in the Mode Specific Parameters field for NPCA is the same as the encoding of the corresponding fields in the NPCA Operation Parameters field defined in 9.4.2.353 (UHR Operation element)).

9.4.2.360.4 Mode Specific Parameters for DUO

When the value of the Mode ID field is 2,

— the Mode Tuple field corresponds to DUO, and

— the Mode Enable field is reserved, and

— the Mode Update field is reserved, and

— the Mode Specific Parameters field carries the parameters for DUO.

The Mode Specific Parameters field for DUO is as defined in Figure 9-aa65 (Mode Specific Parameters field for DUO format).

Copyright © 2025 IEEE. All rights reserved.
This is an unapproved IEEE Standards Draft, subject to change.

MaxStandaloneDUOBSRP	Reserved

Bits:

Figure 9-aa65— Mode Specific Parameters field for DUO format

9.4.2.360.5 Mode Specific Parameters for P-EDCA

When the value of the Mode ID field is 3,

— the Mode Tuple field corresponds to P-EDCA, and

— the Mode Specific Parameters field carries the parameters for P-EDCA.

The Mode Specific(#4618) Parameters field for P-EDCA is as defined in Figure 9-aa66 (Mode Specific Parameters field for P-EDCA format).(#4618, 8697, 9987, 11424, 11856)

B0–B3	B4–B7	B8–B11	B12–B13	B14–B16
P-EDCA CWmin	P-EDCA CWmax	P-EDCA AIFSN	CW DS	P-EDCA PSRC threshold
Bits: 4	4	4	2	3

B17–B18	B19–B23
P-EDCA QSRC threshold	Reserved
Bits: 2	5

Figure 9-aa66—Mode Specific Parameters field for P-EDCA format

The encoding of fields in the Mode Specific Parameters field for P-EDCA is the same as the encoding of the corresponding fields in the P-EDCA Operation Parameters field defined in 9.4.2.353 (UHR Operation element).

9.4.2.360.6 Mode Specific Parameters for DBE

When the value of the Mode ID field is 4,

— the Mode Tuple field corresponds to DBE, and

— the Mode Specific Parameters field carries the parameters for DBE.

The Mode Specific Parameters field for DBE is as defined in Figure 9-aa67 (Mode Specific Parameters field for DBE format(#10589, #12511)).

B0–B2	B3	B4–B7	B8–B23
DBE Bandwidth	DBE Disabled Subchannel Bitmap Present	Reserved	DBE Disabled Subchannel Bitmap
Bits: 3	1	4	0 or 16

Figure 9-aa67—Mode Specific Parameters field for DBE format(#10589, #12511)

Copyright © 2025 IEEE. All rights reserved.
This is an unapproved IEEE Standards Draft, subject to change.

The encoding of fields in the Mode Specific Parameters field for DBE is the same as the encoding of the corresponding fields in the DBE Operation Parameters field as defined in 9.4.2.353 (UHR Operation element).

9.4.2.360.7 Mode Specific Parameters for AP PUO

When the value of the Mode ID field is 5,

— the Mode Tuple field corresponds to AP PUO, and

— the Mode Specific Parameters field is not present, and

— the parameters for AP PUO are carried in a TWT element as defined in 37.19.4 (AP PUO mode).

9.4.2.360.8 Mode Specific Parameters for ELR Reception

When the value of the Mode ID field is 6,

— the Mode Tuple field corresponds to ELR Reception, and

— the Mode Update field is reserved, and

— the Mode Specific Parameters field is not present.

9.4.2.361 Tx Power Indication Element

The Tx Power Indication element signals the transmission power of the Beacon frames. The element format is shown in(#4105) Figure 9-aa68 (Tx Power Indication element format).

	Element ID	Length	Element ID Extension	AP Conducted Tx Power
Octets:	1	1	1	1

Figure 9-aa68—Tx Power Indication element format

The AP Conducted Tx Power field indicates the AP's combined transmit power at the transmit antenna connector of all the antennas used to transmit the Beacon PPDU in units of dBm/20 MHz. The transmit power in dBm/20 MHz, PTX, is calculated as PTX = -20 + 2×*FVal*, where *FVal* is the value of the AP Conducted Tx Power subfield, except for the value 31, which is reserved.

	B0 B4	B5 B7
	AP Conducted Tx Power	Reserved
Bits:	5	3

Figure 9-aa69—AP Conducted Tx Power field format

NOTE 1—The AP Conducted (#4988)(#9846)Tx Power field is the total conducted power and does not include antenna gain. This is different from the Transmit Power field in 9.4.2.15(TPC Report element) which indicates the EIRP including antenna gain.

NOTE 2—The calculation of the AP Conducted Tx(#4989) Power field is similar to 9.2.4.7.1（TRS Control field）.

Copyright © 2025 IEEE. All rights reserved.
This is an unapproved IEEE Standards Draft, subject to change.

9.6 Action frame format details

9.6.7 Public Action frame details

9.6.7.1 Public Action field

Change (#Ed)Table 9-516 (Public Action field values) as follows:

Table 9-516—Public Action field values

Public Action field value	Description
...	...
66	MAPC Discovery Request
67	MAPC Discovery Response
68	MAPC Authentication
69	MAPC Negotiation Request
70	MAPC Negotiation Response
71	MAPC TXOP Return
...	...

9.6.7.17 TDLS Discovery Response frame format

Insert one new row to Table 9-527 (TDLS Discovery Response Action field format) (not all lines shown) in numeric order: (#Ed)

Table 9-527—TDLS Discovery Response Action field format

Order	Information	Notes
…	…	…
22	(#11670)UHR Capabilities	The UHR Capabilities element is present if dot11UHROptionImplemented is true; otherwise, it is not present.
…	…	…

9.6.7.36 FILS Discovery frame format

Change (#Ed)Table 9-537 (BSS Operating Channel Width) as follows:

Copyright © 2025 IEEE. All rights reserved.
This is an unapproved IEEE Standards Draft, subject to change.

Table 9-537—BSS Operating Channel Width

BSS Operating Channel Width field	HR/DSSS, OFDM, ERP, HT, VHT, or HE BSS operating channel width	EHT or UHR BSS operating channel width	TVHT BSS operating channel width
0	20 MHz or 22 MHz	20 MHz or 22 MHz	TVHT_W
1	40 MHz	40 MHz	TVHT_W+W
2	80 MHz	80 MHz	TVHT_2W
3	160 MHz or 80+80 MHz	160 MHz	TVHT_4W or TVHT_2W+2W
4	Reserved	320 MHz	Reserved
5–7	Reserved	Reserved	Reserved

Change (#Ed)Table 9-539 (PHY Index subfield) (not all lines shown) as follows:

Table 9-539—PHY Index subfield

PHY Index subfield	PHY
…	
6	UHR (see Clause 38(Ultra-high reliability (UHR) PHY specification))
~~6~~–7	Reserved

Insert the following column in (#Ed, 11671, 4144, 5730)Table 9-540 (FILS Minimum Rate):

Table 9-540—FILS Minimum Rate

FILS Minimum Rate subfield	PHY Index subfield is 0 (HR/DSSS)	PHY Index subfield is 1 (ERP-OFDM)	PHY Index subfield is 2 (HT)	PHY Index subfield is 3 (VHT or TVHT)	PHY Index subfield is 4 (HE)	PHY Index subfield is 5 (EHT)	PHY Index subfield is 6 (UHR)
0	1 Mb/s	6 Mb/s	HT-MCS 0	VHT-MCS 0	HE-MCS 0	EHT-MCS 0	UHR-MCS 0
1	2 Mb/s	9 Mb/s	HT-MCS 1	VHT-MCS 1	HE-MCS 1	EHT-MCS 1	UHR-MCS 1
2	5.5 Mb/s	12 Mb/s	HT-MCS 2	VHT-MCS 2	HE-MCS 2	EHT-MCS 2	UHR-MCS 2
3	11 Mb/s	18 Mb/s	HT-MCS 3	VHT-MCS 3	HE-MCS 3	EHT-MCS 3	UHR-MCS 3
4	Reserved	24 Mb/s	HT-MCS 4	VHT-MCS 4	HE-MCS 4	EHT-MCS 4	UHR-MCS 4
5–7	Reserved	Reserved	Reserved	Reserved	Reserved	Reserved	Reserved

Copyright © 2025 IEEE. All rights reserved.
This is an unapproved IEEE Standards Draft, subject to change.

9.6.7.65 MAPC Discovery Request frame format(#Ed)

The MAPC Discovery Request frame is used by an AP to advertise its capabilities and common parameters for MAPC. The format of the MAPC Discovery Request frame is defined in Figure 9-aa70 (MAPC Discovery Request frame format). (#4251, 4636)

	Category	Public Action	Dialog Token	MAPC Discovery Info
Octets:	1	1	1	variable

Figure 9-aa70—MAPC Discovery Request frame format

The Category field is defined in 9.4.1.11 (Action field).

The Public Action field is defined in 9.6.7.1 (Public Action field).

The Dialog Token field is defined in 9.4.1.12 (Dialog Token field) and is set to a nonzero value chosen by the AP sending the MAPC Discovery Request frame.(#4147)

The MAPC Discovery Info field carries a MAPC element as defined in 9.4.2.355 (MAPC element).

NOTE—When a MAPC element carrying per-scheme profiles is included in a MAPC Discovery Request frame, the MAPC Scheme Request Set field is not included in the reported per-scheme profiles.

9.6.7.66 MAPC Discovery Response frame format

The MAPC Discovery Response frame is sent by an AP in response to a MAPC Discovery Request frame to advertise its MAPC capabilities, common parameters and other requested MAPC information(#5516). The format of the MAPC Discovery Response frame is defined in Figure 9-aa71 (MAPC Discovery Response frame format).

	Category	Public Action	Dialog Token	MAPC Discovery Info
Octets:	1	1	1	variable

Figure 9-aa71—MAPC Discovery Response frame format

The Category field is defined in 9.4.1.11 (Action field).

The Public Action field is defined in 9.6.7.1 (Public Action field).

The Dialog Token field is defined in 9.4.1.12 (Dialog Token field) and is set to the value in the corresponding MAPC Discovery Request frame.(#4143, 8466)

The MAPC Discovery Info field carries a MAPC element as defined in 9.4.2.355 (MAPC element).

NOTE—When a MAPC element carrying per-scheme profiles is included in a MAPC Discovery Response frame, the MAPC Scheme Request Set field is not included in the reported per-scheme profiles.

Copyright © 2025 IEEE. All rights reserved.
This is an unapproved IEEE Standards Draft, subject to change.

9.6.7.67 MAPC Authentication frame format

The MAPC Authentication frame is used by two UHR APs to complete the MAPC security negotiation procedure. The format of the MAPC Authentication frame is defined in Figure 9-aa72 (MAPC Authentication frame format)(#Ed).

	Category	Public Action	Dialog Token	MAPC Authentication
Octets:	1	1	1	variable

Figure 9-aa72—MAPC Authentication frame format

The Category field is defined in 9.4.1.11 (Action field).

The Public Action field is defined in 9.6.7.1 (Public Action field).

The Dialog Token field is set to a nonzero value chosen by the AP sending the MAPC Authentication frame.

The MAPC Authentication field carries a MAPC element as defined in 9.4.2.355 (MAPC element).

NOTE—The Security Profile subelement of MAPC element is included in a MAPC Authentication frame, and the RSNE field and RSNXE field are not included in the Security Profile subelement.

9.6.7.68 MAPC Negotiation Request frame format

The MAPC Negotiation Request frame is used by an AP to request to establish, update, or teardown agreement(s) for MAPC scheme(s). The format of the MAPC Negotiation Request frame is defined in Figure 9-aa73 (MAPC Negotiation Request frame format).

	Category	Public Action/ Protected Dual Of Public Action	Dialog Token	MAPC Negotiation Info
Octets:	1	1	1	variable

Figure 9-aa73—MAPC Negotiation Request frame format

The Category field is defined in 9.4.1.11 (Action field).

The Public Action/Protected Dual of Public Action field is defined in 9.6.7.1 (Public Action field) and in 9.6.10 (Protected Dual Of Public Action frames).

The Dialog Token field is set to a nonzero value chosen by the AP sending the MAPC Negotiation Request frame.

The MAPC Negotiation Info field carries a MAPC element as defined in 9.4.2.355 (MAPC element).

NOTE—When a MAPC element carrying per-scheme profiles is included in a MAPC Negotiation Request frame, the MAPC Scheme Request Set field is included in the reported per-scheme profiles.

9.6.7.69 MAPC Negotiation Response frame format

The MAPC Negotiation Response frame is used by an AP to respond to another AP that transmits a MAPC Negotiation Request frame. The format of the MAPC Negotiation Response frame is defined in Figure 9-aa74 (MAPC Negotiation Response frame format).

Copyright © 2025 IEEE. All rights reserved.
This is an unapproved IEEE Standards Draft, subject to change.

	Category	Public Action/ Protected Dual Of Public Action	Dialog Token	Status Code	MAPC Negotiation Info
Octets:	1	1	1	2	variable

Figure 9-aa74—MAPC Negotiation Response frame format

The Category field is defined in 9.4.1.11 (Action field).

The Public Action/Protected Dual Of Public Action field is defined in 9.6.7.1 (Public Action field) and in 9.6.10 (Protected Dual Of Public Action frames).

The Dialog Token field is set to a nonzero value chosen by the AP sending the MAPC Negotiation Response frame.

The Status Code field is defined in 9.4.1.9 (Status Code field). Status Code field indicates the status of a MAPC negotiation as indicated in Table 9-80 (Status codes) and it is set by following the rules defined in 37.15.1.3 (MAPC agreement negotiation).

The MAPC Negotiation Info field carries a MAPC element as defined in 9.4.2.355 (MAPC element).

NOTE—When a MAPC element carrying per-scheme profiles is included in a MAPC Negotiation Response frame, the MAPC Scheme Request Set field is included in the reported per-scheme profiles.

9.6.7.70 MAPC TXOP Return frame format

The MAPC TXOP Return frame is transmitted by a Co-TDMA coordinated AP to return the TXOP back to the Co-TDMA coordinating AP. The format of the MAPC TXOP Return frame Action field is shown in Figure 9-aa75 (MAPC TXOP Return frame Action field format).

	Category	Public Action
Octets:	1	1

Figure 9-aa75—MAPC TXOP Return frame Action field format

The Category field is defined in 9.4.1.11 (Action field).

The Public Action field is defined in 9.6.7.1 (Public Action field).

9.6.10 Protected Dual of Public Action frame details

Make the following changes to (#Ed)Table 9-561 (Public Action field values defined for Protected Dual of Public Action frames) (only relevant rows shown) as follows:

Copyright © 2025 IEEE. All rights reserved.
This is an unapproved IEEE Standards Draft, subject to change.

Table 9-561—Public Action field values defined for Protected Dual of Public Action frames

Public Action field value	Description	Defined in
…	…	…
42	Protected MAPC Negotiation Request	9.6.7.68 (MAPC Negotiation Request frame format)
43	Protected MAPC Negotiation Response	9.6.7.69 (MAPC Negotiation Response frame format)
…	…	…

9.6.12 TDLS Action field formats

9.6.12.2 TDLS Setup Request Action field format

Insert one new row to Table 9-570 (Information for TDLS Setup Request Action field) (not all lines shown) in numeric order: (#Ed)

Table 9-570—Information for TDLS Setup Request Action field

Order	Information	Notes
…	…	…
28	UHR Capabilities(#4430)	The UHR Capabilities element is present if dot11UHROptionImplemented is true; otherwise, it is not present.
…	…	…

9.6.12.3 TDLS Setup Response Action field format

Insert one new row to Table 9-571 (Information for TDLS Setup Response Action field) (not all lines shown) in numeric order: (#Ed)

Table 9-571—Information for TDLS Setup Response Action field

Order	Information	Notes
…	…	…
30	UHR Operation(#4430)	The UHR Operation element is present if dot11UHROptionImplemented is true; otherwise, it is not present.
…	…	…

Copyright © 2025 IEEE. All rights reserved.
This is an unapproved IEEE Standards Draft, subject to change.

9.6.12.4 TDLS Setup Confirm Action field format

Insert one new row to Table 9-572 (Information for TDLS Setup Confirm Action field) (not all lines shown) in numeric order: (#Ed)

Table 9-572—Information for TDLS Setup Confirm Action field

Order	Information	Notes
…	…	…
17	UHR Capabilities	The UHR Capabilities element is present if dot11UHROptionImplemented is true; otherwise, it is not present.
…	…	…

9.6.15 Self-protected Action frame details(#7561)

9.6.15.2 Mesh Peering Open frame format

9.6.15.2.2 Mesh Peering Open frame details

Insert two new rows to Table 9-595 (Mesh Peering Open frame Action field format) (not all lines shown) in numeric order: (#Ed)

Table 9-595—Mesh Peering Open frame Action field format

Order	Information	Notes
…	…	…
27	UHR Capabilities	The UHR Capabilities element is present if dot11UHROptionImplemented is true; otherwise, it is not present.
28	UHR Operation	The UHR Operation element is present if dot11UHROptionImplemented is true; otherwise, it is not present.
…	…	…

9.6.15.3 Mesh Peering Confirm frame format

9.6.15.3.2 Mesh Peering Confirm frame details

Insert two new rows to Table 9-596 (Mesh Peering Confirm frame Action field format) (not all lines shown) in numeric order: (#Ed)

Copyright © 2025 IEEE. All rights reserved.
This is an unapproved IEEE Standards Draft, subject to change.

Table 9-596—Mesh Peering Confirm frame Action field format

Order	Information	Notes
…	…	…
23	UHR Capabilities	The UHR Capabilities element is present if dot11UHROptionImplemented is true; otherwise, it is not present.
24	UHR Operation	The UHR Operation element is present if dot11UHROptionImplemented is true; otherwise, it is not present.
…	…	…

Add a new subclause (#Ed)9.6.43 (Protected UHR Action frame details) after 9.6.42 EDP Action frame details:

9.6.43 Protected UHR Action frame details

9.6.43.1 Protected UHR Action field

A Protected UHR Action field, in the octet immediately after the Category field, differentiates the Protected UHR Action frame formats. The Protected UHR Action field values associated with each frame format within the UHR category are defined in (#7261)Table 9-658ba (Protected UHR Action field values).

Table 9-658ba—Protected UHR Action field values

Value	Meaning	Time priority
0	UHR Link Reconfiguration Request	No
1	UHR Link Reconfiguration Response	No
2	UHR Link Reconfiguration Notify	No

Editor's Note: Will further update the table index after the table indexes of REVmf, 11bf, 11bk and 11bi are aligned.

9.6.43.2 UHR Link Reconfiguration Request frame format

The UHR Link Reconfiguration Request frame is used by a UHR MLD for performing SMD BSS transition (see 37.16 (Seamless mobility domain (SMD) BSS transition(#9915))) and by a UHR non-AP MLD for performing enablement, disablement or parameter updates of operating modes (see 37.31 (Procedure for operating mode and parameter updates)).(#4585, 6321, 7632, 7816, 10497, 11674, 12024)

The UHR Link Reconfiguration Request frame is an Action frame of category Protected UHR. The Action field of a UHR Link Reconfiguration Request frame contains the information shown in (#7262)Table 9-658bb (UHR Link Reconfiguration Request frame Action field format).

Copyright © 2025 IEEE. All rights reserved.
This is an unapproved IEEE Standards Draft, subject to change.

Table 9-658bb—UHR Link Reconfiguration Request frame Action field format

Order	Meaning
1	Category
2	Protected UHR Action
3	Dialog Token
4	Type
5	Reconfiguration Multi-Link element (see 9.4.2.323 (Multi-Link element))
6	OCI element (see 9.4.2.235 (OCI element)) (optional)
7	SMD BSS Transition Parameters element (see 9.4.2.357 (SMD BSS Transition Parameters element)) (optional)
8	Diffie-Hellman Parameter element (see 9.4.2.312 (Diffie-Hellman Parameter element)) (optional)(#7263)(#7195)(#6372)
9	Nonce element (see 9.4.2.188 (Nonce element)) (optional)

The Category field is defined in 9.4.1.11 (Action field) and is set to Protected UHR. The Protected UHR Action field is defined in 9.6.43.1 (Protected UHR Action field).

The Protected UHR Action field is defined in 9.6.43.1 (Protected UHR Action field).

The Dialog Token field is set to a nonzero value chosen by the non-AP MLD sending the UHR Link Reconfiguration Request frame.

The Type field is defined in Figure 9-aa76 (Type field format).

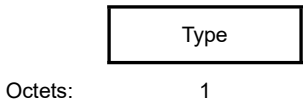

Figure 9-aa76 —Type field format

Editor's Note: Will further update the figure index after the figure indexes of REVmf, 11bf, 11bk and 11bi are aligned.

The Type field indicates the type of the UHR Link Reconfiguration Request frame and is set as defined in Table 9-658bc (Type field encoding).(#4205, 4432, 4586, 4615, 4959, 5054, 5677, 5731, 5999, 6183, 6318, 7092, 7269, 7270, 7271, 7633, 7817, 9858, 10408, 10499, 12025, 12476)

Table 9-658bc—Type field encoding

Value	Meaning
0	ST preparation (see 37.16.5 (SMD BSS transition preparation procedure)).
1	ST execution (see 37.16.6 (SMD BSS transition execution procedure via the current AP MLD) and 37.16.7 (SMD BSS transition execution procedure via the target AP MLD)).

Copyright © 2025 IEEE. All rights reserved.
This is an unapproved IEEE Standards Draft, subject to change.

Table 9-658bc—Type field encoding *(continued)*

Value	Meaning
2	Reserved
3	OMP request (see 37.31 (Procedure for operating mode and parameter updates)
4-255	Reserved

The Reconfiguration Multi-Link element is defined in 9.4.2.323 (Multi-Link element)). This element does not contain any per-STA profile in the Link Info field of the Reconfiguration Multi-link element if the Type field is set to 1 (ST execution).

The OCI element is defined in 9.4.2.323 (Multi-Link element).

The SMD BSS Transition Parameters element is defined in 9.4.2.357 (SMD BSS Transition Parameters element). This element is present if the Type field is set to 0 or 1. Otherwise, the element is not present.

The Diffie-Hellman Parameter(#7195)(#6372) element is defined in 9.4.2.312 (Diffie-Hellman Parameter element)(#7191)(#7263)(#4256).

The Nonce element is defined in 9.4.2.188 (Nonce element).

9.6.43.3 UHR Link Reconfiguration Response frame format

The UHR Link Reconfiguration Response frame is used by a UHR non-AP MLD and UHR AP MLD for performing SMD BSS transition (see 37.16 (Seamless mobility domain (SMD) BSS transition(#9915))).

The UHR Link Reconfiguration Response frame is sent by an AP MLD in response to a UHR Link Reconfiguration Request frame received from a non-AP MLD to accept or reject a target AP MLD preparation or to accept an ST execution.

The UHR Link Reconfiguration Response frame is an Action frame of category Protected UHR. The Action field of a UHR Link Reconfiguration Response frame contains the information shown in (#7265)Table 9-658bd (UHR Link Reconfiguration Response frame Action field format).

Table 9-658bd—UHR Link Reconfiguration Response frame Action field format

Order	Meaning
1	Category
2	Protected UHR Action
3	Dialog Token
4	Type
5	Count
6	Reconfiguration Status List
7	Group Key Data (optional)
8	OCI element (see 9.4.2.235 (OCI element)) (optional)

Copyright © 2025 IEEE. All rights reserved.
This is an unapproved IEEE Standards Draft, subject to change.

Table 9-658bd—UHR Link Reconfiguration Response frame Action field format

Order	Meaning
9	Basic Multi-Link element (see 9.4.2.322.2 (Basic Multi-Link element)) (optional)
10	SMD BSS Transition Parameters element (see 9.4.2.357 (SMD BSS Transition Parameters element)) (optional)
11	MSCS Descriptor element as defined in the (Re)Association Response (see 9.4.2.242 (MSCS Descriptor element)) (optional)
12	Diffie-Hellman Parameter element (see 9.4.2.312 (Diffie-Hellman Parameter element)) (optional)(#7195)(#6372)
13	Nonce element (see 9.4.2.188 (Nonce element)) (optional)

The Category field is defined in 9.4.1.11 (Action field) and is set to Protected UHR. The Protected UHR Action field is defined in 9.6.43.1 (Protected UHR Action field).

The Protected UHR Action field is defined in 9.6.43.1 (Protected UHR Action field).

The Dialog Token field is set to the value of the Dialog Token field from the corresponding UHR Link Reconfiguration Request frame.

The Type field is defined in Table 9-658be (Type field encoding) and is set to the value of the Type field of the corresponding UHR Link Reconfiguration Request frame.

Table 9-658be—Type field encoding

Value	Meaning
0	ST preparation (see 37.16.5 (SMD BSS transition preparation procedure)).
1	ST execution (see 37.16.6 (SMD BSS transition execution procedure via the current AP MLD) and 37.16.7 (SMD BSS transition execution procedure via the target AP MLD)).
2-255	Reserved

The Count field has the same definition as the Count field in the Link Reconfiguration Response frame (see 9.6.38.14 (Link Reconfiguration Response frame format)).

The Reconfiguration Status List field has the same definition as the Reconfiguration Status List field in the Link (#5163, 5676)Reconfiguration Response frame (see 9.6.38.14 (Link Reconfiguration Response frame format)).

The Group Key Data field has the same definition as the Group Key Data field in the Link Reconfiguration Response frame (see 9.6.38.14 (Link Reconfiguration Response frame format)). This field is present if the Type field is 1. Otherwise, this field is not present.

The OCI element is defined in 9.4.2.323 (Multi-Link element).

Copyright © 2025 IEEE. All rights reserved.
This is an unapproved IEEE Standards Draft, subject to change.

The Basic Multi-Link element is defined in 9.4.2.323.2 (Basic Multi-Link element). This element is present if the Type field is 0 and target AP MLD accepts at least one of the requested links, else this element is not present.

The SMD BSS Transition Parameters element is defined in 9.4.2.357 (SMD BSS Transition Parameters element). This field is present only if any of the following is true:

— The Type field indicates 0 (ST preparation) and the target AP MLD accepts at least one of the links requested by the non-AP MLD in the ST preparation request.

— The Type field 1 (ST execution) and the Status Code is SUCCESS.

The Diffie-Hellman Parameter(#7195)(#6372) element is defined in 9.4.2.312 (Diffie-Hellman Parameter element)(#7195)(#6372).

The Nonce element is defined in 9.4.2.188 (Nonce element).

9.6.43.4 UHR Link Reconfiguration Notify frame format

The UHR Link Reconfiguration Notify frame is used by a UHR MLD for performing SMD BSS transition (see 37.16 (Seamless mobility domain (SMD) BSS transition(#9915))) and by a UHR AP MLD for performing enablement, disablement or parameter updates of operating modes (see 37.31 (Procedure for operating mode and parameter updates)).(#4587, 6322, 7634, 7818, 11674, 12032, 12479)

The UHR Link Reconfiguration Notify frame is an Action or Action No Ack frame of category Protected UHR. The Action field of a UHR Link Reconfiguration Notify frame contains the information shown in Table 9-658bf (UHR Link Reconfiguration Notify frame Action field format).

Table 9-658bf—UHR Link Reconfiguration Notify frame Action field format

Order	Meaning
1	Category
2	Protected UHR Action
3	Dialog Token
4	Type
5	DL Data Drain Info (optional)
6	Reconfiguration Multi-Link element (see 9.4.2.323.4 (Reconfiguration Multi-Link element)) (optional)(#4377, 7716, 12534, 10605, 5704, 9477)

The Category field is defined in 9.4.1.11 (Action field) and is set to Protected UHR.

The Protected UHR Action field is defined in (#7267)9.6.43.1 (Protected UHR Action field).

The Dialog Token field is set to the value of the Dialog Token field from the corresponding UHR Link Reconfiguration Request frame.

The Type field indicates the type of the UHR Link Reconfiguration Notify frame and is set per Table 9-658bg (Type field encoding).

Copyright © 2025 IEEE. All rights reserved.
This is an unapproved IEEE Standards Draft, subject to change.

Table 9-658bg—Type field encoding

Value	Meaning
0-1	Reserved.
2	An indication of early termination of the DL draining period or no more DL data (see 37.16.9 (Downlink draining period)).
3	OMP response (see 37.31 (Procedure for operating mode and parameter updates))
4	A confirmation response to a UHR Link Reconfiguration Notify frame received from a DSO AP with Type field equal to 3.(#5704, 12535, 8642, 10577)
5-255	Reserved.

The DL Data Drain Info field is included only if the Type field is set to 2. The format of the DL Data Drain Info field is shown in Figure 9-aa77 (DL Data Drain Info field format)(#Ed).

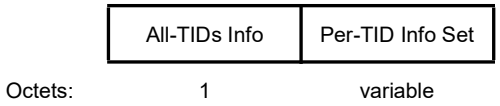

Figure 9-aa77 —DL Data Drain Info field format

The format of the All-TIDs(#4991) Info field is shown in Figure 9-aa78 (All-TIDs Info field format).

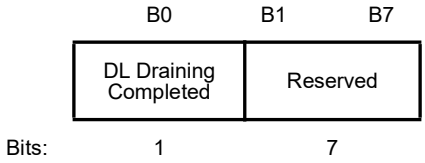

Figure 9-aa78—All-TIDs Info field format

The DL Draining Completed field is set by a non-AP MLD as follows:

— 0 to indicate the non-AP MLD has terminated the DL draining period (see (#Ed)37.16.9 (Downlink draining period)).

— The value 1 is reserved.

The DL Draining Completed field is set by an AP MLD as follows:

— 0 to indicate DL data transmissions are terminated for all TIDs.

— 1 to indicate DL data transmissions are pending for a subset of TIDs.

The Per-TID Info Set field is not present when the UHR Link Reconfiguration Notify frame including the DL Data Drain Info field is transmitted by a non-AP MLD.

When the UHR Link Reconfiguration Notify frame including the DL Data Drain Info field is transmitted by an AP MLD, the Per-TID Info Set field is not present if the DL Draining Completed field is set to 0. The Per-TID Info Set field is optionally present if the DL Draining Completed field is 1. The Per-TID Info Set field includes one or more Per-TID Info fields if the DL Draining Completed field is 1. Each Per-TID Info field indicates whether the DL data is completed or not for that TID.

Copyright © 2025 IEEE. All rights reserved.
This is an unapproved IEEE Standards Draft, subject to change.

The format of the Per-TID Info field is defined in Figure 9-aa79 (Per-TID Info field format).

	B0 B3	B4	B5 B7
	TID	TID DL Draining Completed	Reserved
Bits:	4	1	3

Figure 9-aa79—Per-TID Info field format

The TID field is set to the TID for which the traffic is indicated.

The TID DL Draining Completed field is set to 1 if there are no more buffered DL traffic for the TID specified in the TID field. This field is set to 0 otherwise.

(#4377, 7716, 12534, 10605, 5704, 9477)The Reconfiguration Multi-Link element is defined in 9.4.2.323.4 (Reconfiguration Multi-Link element). This element is present if:

— The Type field is 3 and the UHR Link Reconfiguration Notify frame is transmitted by a 320 MHz BSS bandwidth DSO AP to an 80 MHz operating DSO non-AP STA that is requesting to enable DSO mode, or

— The Type field is 4 and the UHR Link Reconfiguration Notify frame is transmitted by an 80 MHz operating DSO non-AP STA to a 320 MHz BSS bandwidth DSO AP,

— Otherwise, this element is not present.

9.7 Aggregate MPDU (A-MPDU)

Modify the subclause 9.7.1 (A-MPDU format) in the context of 9.7 (A-MPDU) as follows:

Change the fourth paragraph as follows:

The EOF Padding field is shown in (#Ed)Figure 9-1450 (EOF Padding field format). This is present only in a VHT, EDMG, S1G, HE, ~~or~~ EHT, or UHR PPDU.

Change the sixth paragraph as follows:

In a VHT, EDMG, S1G, HE, ~~or~~ EHT, or UHR PPDU, the following padding is present, as determined by the rules in 10.12.6 (A-MPDU padding for VHT, HE, EHT or S1G PPDU):

— 0–3 octets in the Padding subfield of the final A-MPDU subframe (see (#Ed)Figure 9-1451 (A-MPDU subframe format)) before any EOF padding subframes. The content of these octets is unspecified.

— Zero or more EOF padding subframes in the EOF Padding Subframes subfield.

— 0–3 octets in the EOF Padding Octets subfield. The content of these octets is unspecified.

Change the ninth paragraph as follows:

The maximum length of an A-MPDU in an HT PPDU is 65 535 octets. The maximum length of an A-MPDU in a DMG PPDU is 262 143 octets. The maximum length of an A-MPDU pre-EOF padding in a VHT PPDU is 1 048 575 octets. The maximum length of an A-MPDU pre-EOF padding in an HE PPDU is 6 500 631 octets. The maximum length of an A-MPDU in an EDMG PPDU is 4 194 303 octets. The maximum length of an A-MPDU pre-EOF padding in an EHT and a UHR PPDU is 15 523 200 octets. The

Copyright © 2025 IEEE. All rights reserved.
This is an unapproved IEEE Standards Draft, subject to change.

length of an A-MPDU addressed to a particular STA can be further constrained as described in 10.12.2 (A-MPDU length limit rules).

Change (#Ed)Table 9-724 (MPDU delimiter fields) as follows:

Table 9-724—MPDU delimiter fields

Field	Size (bits)	Description
EOF/Tag	1	End of frame indication if the MPDU Length field is 0. Set to 1 in an A-MPDU subframe that has 0 in the MPDU Length field and that is used to pad the A-MPDU in a VHT, HE, ~~or~~ EHT, or UHR PPDU as described in 10.12.6 (A-MPDU padding for VHT, HE, EHT or S1G PPDU). Set to 1 in the MPDU delimiter of an S-MPDU as described in 10.12.7 (Setting the EOF/Tag field of the MPDU delimiter). Tagged/untagged indication if the MPDU Length field is nonzero. Set to 1 in an MPDU delimiter preceding a QoS Data frame or Management frame soliciting an Ack frame or Per AID TID Info field with the Ack Type field set to 1 in a Multi-STA BlockAck frame in a response that is contained in an ack-enabled multi-TID A-MPDU as described in 26.6.3.4 (Ack-enabled multi-TID A-MPDU operation) and ack-enabled single-TID A-MPDU as described in 26.6.3.2 (Ack-enabled single-TID A-MPDU operation). Set to 0 otherwise. In a DMG PPDU, this field is reserved. In an EDMG PPDU, it is set to 1 in EOF padding subframes and set to 0 otherwise (see 10.12.7 (Setting the EOF/Tag field of the MPDU delimiter)).
Reserved	1	
MPDU Length	14	Length of the MPDU in octets. Set to 0 if no MPDU is present. An A-MPDU subframe with 0 in the MPDU Length field is used as defined in 10.12.3 (Minimum MPDU start spacing rules) to meet the minimum MPDU start spacing requirement and also to pad the A-MPDU to fill the available octets in a VHT, HE, ~~or~~ EHT, or UHR PPDU as defined in 10.12.6 (A-MPDU padding for VHT, HE, EHT or S1G PPDU).
CRC	8	8-bit CRC of the preceding 16 bits.
Delimiter Signature	8	Pattern that can be used to detect an MPDU delimiter when scanning for an MPDU delimiter. The unique pattern is 0x4E, which is the ASCII value of the character “N”.

Change the 12th paragraph as follows:

The format of the MPDU Length field when transmitted by a non-DMG STA is shown in Figure 9-1327 (MPDU Length field format (non-DMG)). The MPDU Length Low subfield contains the 12 low order bits of the MPDU length. In a VHT, HE, ~~or~~ EHT, or UHR PPDU, the MPDU Length High subfield contains the two high order bits of the MPDU length. In an HT PPDU, the MPDU Length High subfield is reserved.

Change Equation (9-16) as follows:

$$\cancel{L_{MPDU} = \begin{cases} L_{low} + L_{high} \times 4096, & \text{for a VHT, HE, and EHT PPDU} \\ L_{low}, & \text{for an HT PPDU} \\ L, & \text{for a DMG and EDMG PPDU} \end{cases}} \qquad \cancel{(9\text{-}16)}$$

Copyright © 2025 IEEE. All rights reserved.
This is an unapproved IEEE Standards Draft, subject to change.

$$L_{MPDU} = \begin{cases} L_{low} + L_{high} \times 4096, & \text{for a VHT, HE, EHT or UHR PPDU} \\ L_{low}, & \text{for an HT PPDU} \\ L, & \text{for a DMG and EDMG PPDU} \end{cases} \quad (9\text{-}16)$$

Change the 15th paragraph as follows:

NOTE 2—The format of the MPDU Length field maintains a common encoding structure for HT, VHT, HE, ~~and~~ EHT and UHR PPDUs. For HT PPDUs, only the MPDU Length Low subfield is used, while for VHT, HE, ~~and~~ EHT and UHR PPDUs, both subfields are used.

9.7.3 A-MPDU contents

Change the first paragraph as follows:

In a non-DMG PPDU, an A-MPDU is a sequence of A-MPDU subframes carried in a single PPDU with one of the following combinations of RXVECTOR or TXVECTOR parameter values:

— The FORMAT parameter set to VHT
— The FORMAT parameter set to HT_MF or HT_GF and the AGGREGATION parameter set to 1
— The FORMAT parameter set to S1G, S1G_DUP_1M, or S1G_DUP_2M and the AGGREGATION parameter set to 1
— The FORMAT parameter set to HE_SU, HE_MU, HE_TB, or HE_ER_SU
— The FORMAT parameter set to NGV
— The FORMAT parameter set to EHT_MU or EHT_TB
— The FORMAT parameter set to UHR_MU, UHR_ELR or UHR_TB

Change the sixth paragraph as follows:

The Duration/ID fields in the MAC headers of all MPDUs in an A-MPDU carry the same value. The Duration/ID fields in the MAC headers of the MPDUs in the A-MPDUs carried in a VHT ~~MU PPDU~~, an HE ~~MU PPDU~~, ~~and~~ an EHT ~~MU PPDU~~, and a UHR MU PPDU carry the same value.

Change the tenth paragraph as follows:

A VHT ~~MU PPDU~~, S1G ~~MU PPDU~~, ~~and~~ HE ~~MU PPDU~~, and EHT ~~MU PPDU~~, and UHR MU PPDU do not carry more than one A-MPDU that contains one or more MPDUs soliciting an immediate response if the immediate response is carried in a PPDU that is ~~neither~~not an HE ~~TB PPDU~~, ~~nor~~ an EHT ~~TB PPDU~~. An HE ~~MU PPDU~~ and an EHT ~~MU PPDU~~, and a UHR MU PPDU can carry more than one A-MPDU each of which contains one or more MPDUs soliciting an immediate response if the immediate response is carried in an HE ~~TB PPDU~~, or an EHT ~~TB PPDU~~, or UHR TB PPDU.

Change the 12th paragraph as follows:

NOTE 4—If a STA supports A-MSDUs of 7935 octets (indicated by the Maximum A-MSDU Length field in the HT Capabilities element or in a Reconfiguration Multi-Link element with Reconfiguration Operation Type subfield in the STA Control field equal to 1 and Maximum A-MSDU Length Present subfield in the STA Info field equal to 1 (see 35.3.6.6 (Non-AP MLD operation parameter update))), A-MSDUs transmitted by that TA within an A-MPDU carried in a PPDU with FORMAT HT_MF or HT_GF or within an MPDU carried in a non-HT PPDU are constrained so that the length of the QoS Data frame carrying the A-MSDU is no more than 4095 octets. The 4095-octet MPDU length limit does not apply to A-MPDUs carried in VHT, HE, EHT, UHR or DMG PPDUs. The use of A-MSDU within A-MPDU might be further constrained as described in 9.4.1.13 (Block Ack Parameter Set field) through the operation of the A-MSDU Supported field.

Change (#Ed)Table 9-725 (A-MPDU contexts) (only relevant rows shown) as follows:

Copyright © 2025 IEEE. All rights reserved.
This is an unapproved IEEE Standards Draft, subject to change.

Table 9-725—A-MPDU contexts

Name of Context	Definition of Context	Table defining permitted contents
…	…	…
Control Response	The A-MPDU is transmitted by a STA that is neither a TXOP holder nor an RD responder, or the A-MPDU is transmitted by an HE AP in response to an HE TB PPDU, ~~or~~ an EHT AP in response to an EHT TB PPDU, or UHR AP in response to a UHR TB PPDU, and the transmitter also needs to transmit one of the following immediate response frames: — Ack frame — BlockAck frame with a TID for which an HT-immediate block ack agreement exists — Multi-STA BlockAck frame for acknowledging multi-TID A-MPDU — Multi-STA BlockAck frame for acknowledging an MPDU that solicits an immediate response and for reporting feedback	Table 9-728 (A-MPDU contents in the control response context)
S-MPDU context	The A-MPDU is transmitted within a VHT, an HE, an EHT, or a UHR PPDU, ~~an HE PPDU, or an EHT PPDU~~ and contains an S-MPDU	Table 9-664 (A-MPDU contents in the S-MPDU context)
…	…	…

Change (#Ed)Table 9-728 (A-MPDU contents in the control response context) (only relevant rows shown) as follows:

Change the title of Table 9-730(#Ed) as follows:

Table 9-730—A-MPDU contents in the HE, EHT, or UHR non-ack-enabled single-TID immediate response context ~~or in the EHT non-ack-enabled single-TID immediate response context~~

Change the title of Table 9-731 as follows:

Table 9-731—A-MPDU contents in the HE, EHT, or UHR ack-enabled single-TID immediate response context ~~or in the EHT ack-enabled single-TID immediate response context~~

Change the title of Table 9-732 as follows:

Table 9-732—A-MPDU contents in the HE, EHT, or UHR non-ack-enabled multi-TID immediate response context ~~or in the EHT non-ack-enabled multi-TID immediate response context~~

Change the title of Table 9-733 as follows:

Table 9-733—A-MPDU contents in the HE, EHT, or UHR ack-enabled multi-TID immediate response context ~~or in the EHT ack-enabled multi-TID immediate response context~~

Copyright © 2025 IEEE. All rights reserved.
This is an unapproved IEEE Standards Draft, subject to change.

Table 9-728—A-MPDU contents in the control response context

MPDU	Conditions	
Ack	Ack frame transmitted in response to an MPDU that requires an Ack frame.	One of Ack and compressed BlockAck frame is present at the start of the A-MPDU between two STAs that are not both HE STAs; these are not present other than at the start of the A-MPDU. One of Ack, Compressed BlockAck, and Multi-STA BlockAck frame is present at the start of the A-MPDU between two HE STAs; these are not present other than at the start of the A-MPDU.
BlockAck	Compressed BlockAck frame with a TID that corresponds to an HT-immediate block ack agreement. See NOTE. Multi-STA BlockAck frame if the preceding PPDU: — is — ~~either~~ an HE ~~or~~ an EHT, or a UHR TB PPDU that solicits an immediate response (see 26.4.4.5 (Responding to an HE TB PPDU with an SU PPDU)), 35.4 (EHT acknowledgment procedure), and 37.6 (UHR acknowledgment procedure)) — ~~or~~ an HE ~~or~~ an EHT, or a UHR PPDU that carries a multi-TID A-MPDU or ack-enabled multi-TID A-MPDU (see 26.6.3 (Multi-TID AMPDU and ack-enabled single-TID AMPDU))~~.~~, — is a PPDU that carries a BSRP Trigger frame that is sent as an ICF and is addressing a STA that is operating in a mode that allows including feedback in the Multi-STA BlockAck (see 37.19.2 (Dynamic (#7566)unavailability operation (DUO) mode)) and 37.24 (Low-latency indication (LLI))), — or is a PPDU that requires an immediate acknowledgment or block acknowledgment and is addressing a STA that is operating in a mode that allows sending feedback in the Multi-STA BlockAck frame.	
EDMG Multi-TID BlockAck	If the preceding PPDU that carried a multi-TID A-MPDU contains an implicit or explicit block ack requests for multiple TIDs for which an HT-immediate block ack agreement exists, one or several copies of the same EDMG Multi-TID BlockAck frame.	
…	…	
QoS Null frame with No Ack ack policy	If sent to an HE STA. QoS Null frames with No Ack ack policy.	

Copyright © 2025 IEEE. All rights reserved.
This is an unapproved IEEE Standards Draft, subject to change.

10. MAC sublayer functional description

10.2 MAC architecture

10.2.1 General

Replace Figure 10-1 (STA MAC architecture (Non-DMG non-CMMG non-S1G)) as follows:

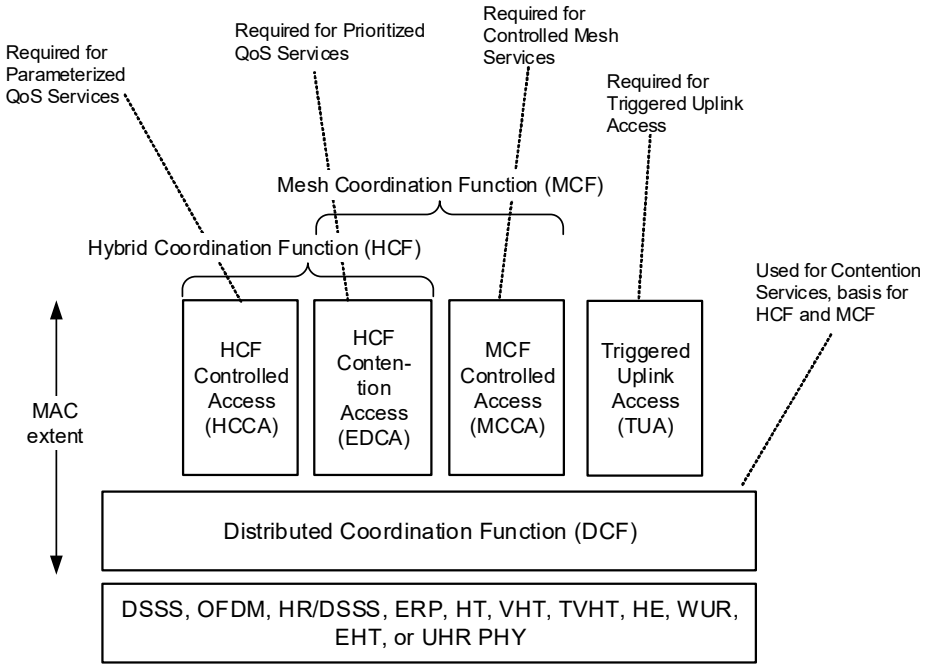

Figure 10-1—STA MAC architecture (Non-DMG non-CMMG non-S1G)

10.6 Multirate support(#Ed)

10.6.10 Modulation classes(#Ed)

Change Table 10-9 (Modulation classes) as follows:

Copyright © 2025 IEEE. All rights reserved.
This is an unapproved IEEE Standards Draft, subject to change.

Table 10-9—Modulation classes

Description of modulation	Condition that selects this modulation class					
	Clause 15 (DSSS PHY specification for the 2.4 GHz band designated for ISM applications) to Clause 18 (Extended Rate PHY (ERP) specification) PHYs or Clause 20 (Directional multi-gigabit (DMG) PHY specification) PHY, or Clause 24 (China directional multi-gigabit (CDMG) PHY specification) PHY, or Clause 25 (China millimeter-wave multi-gigabit (CMMG) PHY specification) PHY or Clause 28 (Enhanced directional multi-gigabit (EDMG) PHY specification) PHY	**Clause 19 (High-throughput (HT) PHY specification) PHY**	**Clause 21 (Very high throughput (VHT) PHY specification) PHY**	**Clause 27 (High-efficiency (HE) PHY specification) PHY**	**Clause 36 PHY**	**Clause 38 (Ultra high reliability (UHR) PHY specification) PHY**
DSSS and HR/DSSS	Clause 15 (DSSS PHY specification for the 2.4 GHz band designated for ISM applications) or Clause 16 (High rate direct sequence spread spectrum (HR/DSSS) PHY specification) transmission	FORMAT is NON_HT. NON_HT_-MODULATION is ERP-DSSS or ERP-CCK.	N/A	FORMAT is NON_HT. NON_HT_-MODULATION is ERP-DSSS or ERP-CCK.	FORMAT is NON_HT. NON_HT_-MODULATION is ERP-DSSS or ERP-CCK.	FORMAT is NON_HT. NON_HT_-MODULATION is ERP-DSSS or ERP-CCK.
ERP-OFDM	18.4 (ERP operating specifications (general)) transmission	FORMAT is NON_HT. NON_HT_-MODULATION is ERP-OFDM.	N/A	FORMAT is NON_HT. NON_HT_-MODULATION is ERP-OFDM.	FORMAT is NON_HT. NON_HT_-MODULATION is ERP-OFDM.	FORMAT is NON_HT. NON_HT_-MODULATION is ERP-OFDM.
OFDM	Clause 17 transmission	FORMAT is NON_HT. NON_HT_-MODULATION is OFDM or NON_HT_DUP_OFDM.	FORMAT is NON_HT. NON_HT_-MODULATION is OFDM or NON_HT_DUP_OFDM.	FORMAT is NON_HT. NON_HT_-MODULATION is OFDM or NON_HT_DUP_OFDM.	FORMAT is NON_HT. NON_HT_-MODULATION is OFDM or NON_HT_DUP_OFDM.	FORMAT is NON_HT. NON_HT_-MODULATION is OFDM or NON_HT_DUP_OFDM.

Copyright © 2025 IEEE. All rights reserved.
This is an unapproved IEEE Standards Draft, subject to change.

Table 10-9—Modulation classes *(continued)*

Description of modulation	Condition that selects this modulation class					
	Clause 15 (DSSS PHY specification for the 2.4 GHz band designated for ISM applications) to Clause 18 (Extended Rate PHY (ERP) specification) PHYs or Clause 20 (Directional multi-gigabit (DMG) PHY specification) PHY, or Clause 24 (China directional multi-gigabit (CDMG) PHY specification) PHY, or Clause 25 (China millimeter-wave multi-gigabit (CMMG) PHY specification) PHY or Clause 28 (Enhanced directional multi-gigabit (EDMG) PHY specification) PHY	**Clause 19 (High-throughput (HT) PHY specification) PHY**	**Clause 21 (Very high throughput (VHT) PHY specification) PHY**	**Clause 27 (High-efficiency (HE) PHY specification) PHY**	**Clause 36 PHY**	**Clause 38 (Ultra high reliability (UHR) PHY specification) PHY**
HT	N/A	FORMAT is HT_MF or HT_GF.	FORMAT is HT_MF or HT_GF.	FORMAT is HT_MF or HT_GF.	FORMAT is HT_MF or HT_GF.	FORMAT is HT_MF or HT_GF.
DMG Control	Clause 20 (Directional multi-gigabit (DMG) PHY specification) transmission and MCS is 0	N/A	N/A	N/A	N/A	N/A
DMG SC	Clause 20 (Directional multi-gigabit (DMG) PHY specification) transmission and $1 \leq MCS \leq 12.6$	N/A	N/A	N/A	N/A	N/A
DMG Low-power SC	Clause 20 (Directional multi-gigabit (DMG) PHY specification) transmission and $25 \leq MCS \leq 31$	N/A	N/A	N/A	N/A	N/A
VHT	N/A	N/A	FORMAT is VHT.	FORMAT is VHT.	FORMAT is VHT.	FORMAT is VHT.
CDMG Control	Clause 24 (China directional multi-gigabit (CDMG) PHY specification) transmission and MCS is 0	N/A	N/A	N/A	N/A	N/A

Copyright © 2025 IEEE. All rights reserved.
This is an unapproved IEEE Standards Draft, subject to change.

Table 10-9—Modulation classes *(continued)*

Description of modulation	Condition that selects this modulation class					
	Clause 15 (DSSS PHY specification for the 2.4 GHz band designated for ISM applications) to Clause 18 (Extended Rate PHY (ERP) specification) PHYs or Clause 20 (Directional multi-gigabit (DMG) PHY specification) PHY, or Clause 24 (China directional multi-gigabit (CDMG) PHY specification) PHY, or Clause 25 (China millimeter-wave multi-gigabit (CMMG) PHY specification) PHY or Clause 28 (Enhanced directional multi-gigabit (EDMG) PHY specification) PHY	**Clause 19 (High-throughput (HT) PHY specification) PHY**	**Clause 21 (Very high throughput (VHT) PHY specification) PHY**	**Clause 27 (High-efficiency (HE) PHY specification) PHY**	**Clause 36 PHY**	**<u>Clause 38 (Ultra high reliability (UHR) PHY specification) PHY</u>**
CDMG SC	Clause 24 (China directional multi-gigabit (CDMG) PHY specification) transmission and $1 \le MCS \le 16$	N/A	N/A	N/A	N/A	<u>N/A</u>
CDMG Low-power SC	Clause 24 (China directional multi-gigabit (CDMG) PHY specification) transmission and $17 \le MCS \le 23$	N/A	N/A	N/A	N/A	<u>N/A</u>
CMMG Control	Clause 25 (China millimeter-wave multi-gigabit (CMMG) PHY specification) transmission and MCS is 0	N/A	N/A	N/A	N/A	<u>N/A</u>
CMMG SC	Clause 25 (China millimeter-wave multi-gigabit (CMMG) PHY specification) transmission and $1 \le MCS \le 8$	N/A	N/A	N/A	N/A	<u>N/A</u>

Copyright © 2025 IEEE. All rights reserved.
This is an unapproved IEEE Standards Draft, subject to change.

Table 10-9—Modulation classes *(continued)*

Description of modulation	Condition that selects this modulation class					
	Clause 15 (DSSS PHY specification for the 2.4 GHz band designated for ISM applications) to Clause 18 (Extended Rate PHY (ERP) specification) PHYs or Clause 20 (Directional multi-gigabit (DMG) PHY specification) PHY, or Clause 24 (China directional multi-gigabit (CDMG) PHY specification) PHY, or Clause 25 (China millimeter-wave multi-gigabit (CMMG) PHY specification) PHY or Clause 28 (Enhanced directional multi-gigabit (EDMG) PHY specification) PHY	**Clause 19 (High-throughput (HT) PHY specification) PHY**	**Clause 21 (Very high throughput (VHT) PHY specification) PHY**	**Clause 27 (High-efficiency (HE) PHY specification) PHY**	**Clause 36 PHY**	**Clause 38 (Ultra high reliability (UHR) PHY specification) PHY**
CMMG OFDM	Clause 25 (China millimeter-wave multi-gigabit (CMMG) PHY specification) transmission and $9 \le MCS \le 16$	N/A	N/A	N/A	N/A	N/A
HE	N/A	N/A	N/A	FORMAT is HE_SU, HE_ER_SU, HE_MU or HE_TB	FORMAT is HE_SU, HE_ER_SU, HE_MU or HE_TB	FORMAT is HE_SU, HE_ER_SU, HE_MU or HE_TB
EDMG Control	Clause 28 (Enhanced directional multi-gigabit (EDMG) PHY specification) transmission FORMAT is EDMG and EDMG_MODULATION is EDMG_C_MODE	N/A	N/A	N/A	N/A	N/A

Copyright © 2025 IEEE. All rights reserved.
This is an unapproved IEEE Standards Draft, subject to change.

Table 10-9—Modulation classes *(continued)*

Description of modulation	Condition that selects this modulation class					
	Clause 15 (DSSS PHY specification for the 2.4 GHz band designated for ISM applications) to Clause 18 (Extended Rate PHY (ERP) specification) PHYs or Clause 20 (Directional multi-gigabit (DMG) PHY specification) PHY, or Clause 24 (China directional multi-gigabit (CDMG) PHY specification) PHY, or Clause 25 (China millimeter-wave multi-gigabit (CMMG) PHY specification) PHY or Clause 28 (Enhanced directional multi-gigabit (EDMG) PHY specification) PHY	**Clause 19 (High-throughput (HT) PHY specification) PHY**	**Clause 21 (Very high throughput (VHT) PHY specification) PHY**	**Clause 27 (High-efficiency (HE) PHY specification) PHY**	**Clause 36 PHY**	**Clause 38 (Ultra high reliability (UHR) PHY specification) PHY**
EDMG SC	Clause 28 (Enhanced directional multi-gigabit (EDMG) PHY specification) transmission FORMAT is EDMG, EDMG_MODULATION is EDMG_SC_MODE	N/A	N/A	N/A	N/A	N/A
EDMG OFDM	Clause 28 (Enhanced directional multi-gigabit (EDMG) PHY specification) transmission FORMAT is EDMG, EDMG_MODULATION is EDMG_OFDM_MODE	N/A	N/A	N/A	N/A	N/A
EHT	N/A	N/A	N/A	N/A	FORMAT is EHT_MU or EHT_TB	FORMAT is EHT_MU or EHT_TB

Copyright © 2025 IEEE. All rights reserved.
This is an unapproved IEEE Standards Draft, subject to change.

Table 10-9—Modulation classes *(continued)*

Description of modulation	Condition that selects this modulation class					
	Clause 15 (DSSS PHY specification for the 2.4 GHz band designated for ISM applications) to Clause 18 (Extended Rate PHY (ERP) specification) PHYs or Clause 20 (Directional multi-gigabit (DMG) PHY specification) PHY, or Clause 24 (China directional multi-gigabit (CDMG) PHY specification) PHY, or Clause 25 (China millimeter-wave multi-gigabit (CMMG) PHY specification) PHY or Clause 28 (Enhanced directional multi-gigabit (EDMG) PHY specification) PHY	**Clause 19 (High-throughput (HT) PHY specification) PHY**	**Clause 21 (Very high throughput (VHT) PHY specification) PHY**	**Clause 27 (High-efficiency (HE) PHY specification) PHY**	**Clause 36 PHY**	**Clause 38 (Ultra high reliability (UHR) PHY specification) PHY**
UHR	N/A	N/A	N/A	N/A	N/A	FORMAT is UHR_MU, UHR_TB or UHR_ELR

Change the following subclause:

10.6.11 Non-HT basic rate calculation

This subclause defines how to convert an HT-MCS, a VHT-MCS, an HE-MCS, ~~or~~ an EHT-MCS, or a UHR-MCS to a non-HT basic rate for the purpose of determining the rate of the response frame. It consists of two steps as follows:

a) Use the modulation and coding rate determined from the HT-MCS (defined in 19.5 (Parameters for HT-MCSs)), ~~or~~ VHT-MCS (defined in 21.5 (Parameters for VHT-MCSs)), HE-MCS (defined in 27.5 (Parameters for HE-MCSs), ~~or~~ EHT-MCS (defined in 36.5 (Parameters for EHT-MCSs)) or UHR-MCS (defined in 38.5 (Parameters for UHR-MCSs)) to locate a non-HT reference rate by lookup into Table 10-10 (Non-HT reference rate).[1] In the case of an MCS with UEQM, the modulation of stream 1 is used.

b) The non-HT basic rate is the highest rate in the BSSBasicRateSet parameter that is less than or equal to this non-HT reference rate.

[1] For example, if an HT PPDU transmission uses 64-QAM and coding rate of 3/4, the related non-HT reference rate is 54 Mb/s.

Copyright © 2025 IEEE. All rights reserved.
This is an unapproved IEEE Standards Draft, subject to change.

Table 10-10—Non-HT reference rate

Modulation	Coding rate (R)	Non-HT reference rate (Mb/s)
BPSK	1/2	6
BPSK	3/4	9
QPSK	1/2	12
QPSK	2/3	12
QPSK	3/4	18
16-QAM	1/2	24
16-QAM	2/3	24
16-QAM	3/4	36
16-QAM	5/6	36
64-QAM	1/2	48
64-QAM	2/3	48
64-QAM	3/4	54
64-QAM	5/6	54
256-QAM	2/3	54
256-QAM	3/4	54
256-QAM	5/6	54
1024-QAM	3/4	54
1024-QAM	5/6	54
4096-QAM	3/4	54
4096-QAM	5/6	54

NOTE 1—The selection of a non-HT basic rate for the frame sent in response to an HE or EHT PPDU is not influenced by DCM encoding in the HE, ~~or~~ EHT or UHR PPDU.

10.8 HT Control field operation

Change Table 10-12 (Conditions for including Control subfield variants) (only relevant row shown) as follows:

Copyright © 2025 IEEE. All rights reserved.
This is an unapproved IEEE Standards Draft, subject to change.

Table 10-12—Conditions for including Control subfield variants

Control subfield variant	Condition
…	…
EBSR	The transmitting non-AP STA follows the corresponding enhanced buffer status report procedure, as described in 37.11 (Enhanced Buffer status report operation)and the recipient AP has set the Enhanced BSR Support field in the UHR MAC Capabilities Information field in the UHR Capabilities elements it transmits to 1.
MLPM	The transmitting non-AP STA affiliated with an MLPM non-AP MLD follows the multi-link power management procedure as described in 37.17.3 (Multi-link power management) and the recipient STA is affiliated with an MLPM AP MLD.
ONES	The transmitting STA may include a ONES Control subfield in an MPDU that is not carried in an HE/EHT TB PPDU (see 26.5.2.4 (A-MPDU contents in an HE TB PPDU)) when there is nothing to report in A-Control subfield. NOTE—According to 35.5.2.3.1 (General), a non-AP EHT STA that transmits an EHT TB PPDU follows the same rules defined in 26.5.2.4 (A-MPDU contents in an HE TB PPDU) where rules related to HE TB PPDUs also apply to EHT TB PPDUs.

10.12 A-MPDU operation

Change the title of subclause 10.12.6 as follows:

10.12.6 A-MPDU padding for VHT, HE, EHT, UHR or S1G PPDU

10.13 PPDU duration constraint

Insert the following paragraph at the end of the 10.13 subclause:

A UHR STA shall not transmit a UHR PPDU that has a duration (as determined by the PLME-TXTIME.confirm primitive defined in 6.7.6 (PLME-TXTIME.confirm)) that is greater than aPPDUMax-Time defined in Table 38-60 (UHR PHY characteristics).

10.23 HCF

10.23.2.2 EDCA backoff procedure

Modify the text as follows:

In addition, the backoff procedure may be invoked by an EDCAF if:

i) For the EDCAF that is the TXOP holder, the transmission by the TXOP holder of an MPDU in a non-initial PPDU of a TXOP fails, as defined in this subclause and an MPDU in the non-initial PPDU does not solicit an HE TB PPDU.

j) For the EDCAF that is the TXOP holder, the transmission by the TXOP holder of all MPDUs in a non-initial PPDU of a TXOP fails, as defined in this subclause, and the PPDU contains an MPDU that solicits an HE TB PPDU.

k) If explicitly indicated, such as in 37.10 (Non-primary channel access (NPCA)).

Copyright © 2025 IEEE. All rights reserved.
This is an unapproved IEEE Standards Draft, subject to change.

If the backoff procedure is invoked for reason k) above, CW[AC] and QSRC[AC] shall be set according to the descriptions found in 37.10 (Non-primary channel access (NPCA)).

Copyright © 2025 IEEE. All rights reserved.
This is an unapproved IEEE Standards Draft, subject to change.

11. MLME

11.1 Synchronization

11.1.4 Acquiring synchronization, scanning

11.1.4.3 Active scanning and probing procedures

11.1.4.3.2 Active scanning procedure for a non-DMG STA

Update bullet b) in the second paragraph in this subclause as shown below:

For each channel to be scanned:

b) If the STA is a FILS STA, a UHR STA or a 6 GHz HE STA, set the FILSProbeTimer to 0 and starts the FILSProbeTimer. While the FILSProbeTimer is less than dot11FILSProbeDelay, the STA may skip a Probe Request frame transmission and proceed to step g) after setting the ActiveScanningTimer to 0 and starting the ActiveScanningTimer, if one of the following conditions matches:

11.1.4.3.4 Criteria for sending a response

Update the following paragraphs in this subclause as shown below:

The FILS STA that is a non-UHR STA shall respond with the next Beacon frame, as described in 11.1.3 (Maintaining synchronization), to Probe Request frames addressed to individual or broadcast address if all of the following conditions are met:

— The STA is queuing a Beacon frame for transmission;

— The next TBTT of the responding STA is within dot11FILSBeaconResponseWindow;

— The next TBTT is no later than any deadline of Max Channel Time indicated in the FILS Request Parameter element of the Probe Request frame(s), if present; and

— The Beacon frame contains all elements requested by the Request element.

If the next Beacon frame is not used as a response, a Probe Response frame is transmitted. The Probe Response frame shall be addressed to the broadcast or the address of the transmitter of the Probe Request frame. The Probe Response frame should be addressed to the broadcast if both the soliciting STA and the responding STAs are UHR STAs. The Probe Response frame may be transmitted to all or some of the Probe Request frames received from FILS STAs. A first FILS STA may choose not to respond to Probe Request frames from a second FILS STA addressed to the broadcast address if the first STA receives an acknowledged Probe Response frame addressed to the second STA containing the SSID of the first STA's BSS. A non-S1G AP shall remain in the awake state, and shall respond to Probe Request frames, subject to the criteria above.

11.10 Radio measurement procedures

11.10.9.1 Beacon report

11.10.9.1.1 General

If dot11RMBeaconTableMeasurementActivated is false and the measurement mode in the measurement request is Beacon Table, the measuring STA shall reject the measurement request by returning(#9939) a Beacon report with the Incapable subfield set in the Measurement Report Mode field.

Copyright © 2025 IEEE. All rights reserved.
This is an unapproved IEEE Standards Draft, subject to change.

If the measurement mode of the measurement request is RTS/Active, the measuring STA may perform the measurements on the requested channel per the procedure as defined when the measurement mode is Active or by the following procedure:

- Send an RTS frame at the 20 MHz primary channel to the individual address specified by the BSSID field of the measurement request frame.
- Set a measurement duration timer.
- At the end of the measurement duration, process the CTS frames solicited by the RTS frame sent by the measuring STA.

NOTE—The CTS frames are transmitted as defined in 10.3.2.9 (CTS and DMG CTS procedure).

Add the following to the end of Section 11.49 as follows:

11.49 Reduced neighbor report

NOTE 3—An AP is not required to report non-colocated(#5918) APs in the Reduced Neighbor Report element that is carried in its Beacon and FILS Discovery frames. If a UHR AP reports a non-colocated AP in the Reduced Neighbor Report element it transmits, it does not include the Enhanced Critical Updates Information field in the TBTT Information field corresponding to the reported AP.

Copyright © 2025 IEEE. All rights reserved.
This is an unapproved IEEE Standards Draft, subject to change.

12. Security

12.2 Framework

12.2.4 RSNA establishment

Insert the following paragraphs after "i)" as follows:

i) The destination STA chosen by the transmitter is the correct destination. For example, Address Resolution Protocol (ARP) and Internet Control Message Protocol (ICMP) are methods of determining the destination STA's MAC address that are not secure from attacks by other members of the ESS. One of the possible solutions to this problem might be for the STA to send or receive only frames whose final DA or SA are the AP and for the AP to provide a network layer routing function. However, such solutions are outside the scope of this standard.

j) If an RSNA uses MAPC PASN authentication, an RSNA capable STA establishes an RSNA as described in 12.17 (Multi-AP Coordination Preassociation Security Negotiation).

Insert the following paragraphs at the end of the subclause as follows:

When an RSNA is established between a non-AP MLD and an SMD-ME, the SMD Information element (see 9.4.2.356 (SMD Information element)) shall be included in Authentication frames and (Re)Association Request and Response frames.

12.6 RSNA security association management

12.6.1 Security associations

12.6.1.1 Security association definitions

12.6.1.1.1 General

Make the changes as follows:

A security association is a set of policy(ies) and key(s) used to protect information. The information in the security association is stored by each party of the security association, needs to be consistent among all parties, and needs to have an identity. The identity is a compact name of the key and other bits of security association information to fit into a table index or an MPDU. The following types of security associations are supported by an RSNA STA:

— PMKSA: A result of a successful IEEE 802.1X exchange, OWE exchange, SAE authentication, FILS authentication, or preshared PMK information. A PMKSA can be cached.

— PMK-R0 security association: A result of a successful FT initial mobility domain association.

— PMK-R1 security association: A result of a successful FT initial mobility domain association or FT authentication sequence.

— Mesh PMKSA: A result of successful completion of the active authentication protocol.

— PTKSA: A result of a successful 4-way handshake, FT 4-way handshake, FT authentication sequence, FILS authentication, PASN authentication, ~~or~~ EDPKE authentication, or MAPC PASN authentication.

12.6.1.1.6 PTKSA

Make the changes as follows:

Copyright © 2025 IEEE. All rights reserved.
This is an unapproved IEEE Standards Draft, subject to change.

The PTKSA results from a successful 4-way handshake, FT 4-way handshake, FT protocol, FT resource request protocol, FILS authentication, PASN authentication, ~~or~~ EDPKE authentication or MAPC PASN authentication. This security association is also bidirectional. PTKSAs, except those established using PASN authentication, ~~or~~ EDPKE authentication or MAPC PASN authentication, have the same lifetime as the PMKSA or PMK-R1 security Association, whichever comes first. PTKSAs for PASN authentication, ~~or~~ EDPKE authentication or MAPC PASN authentication have a minimum of the lifetime of the PMKSA used and the timeout negotiated, if any, during PASN authentication or MAPC PASN authentication. Because the PTKSA is tied to the PMKSA or to a PMK-R1 security association, it only has the additional information from the 4-way handshake, FT Protocol authentication, FILS authentication, PASN authentication, ~~or~~ EDPKE authentication or MAPC PASN authentication. There shall be only one PTKSA per key ID per band (see 12.6.20 (Multi-band RSNA)) or per MLD setup (see 35.3.5 (ML (re)setup)) with the same Supplicant and Authenticator MAC addresses.

Add the following new section:

12.17 Multi-AP Coordination Preassociation Security Negotiation

12.17.1 General

If dot11MAPCPASNActivated is true, then dot11KEKPASNActivated shall be set to true.

Multi-AP coordination preassociation security negotiation (MAPC PASN) is an RSNA authentication protocol between two MAPC APs that relies on the existence of a PMKSA for an AKMP, termed Base AKMP for MAPC PASN. It is a non-RSNA protocol when there is no PMKSA norcorresponding Base AKMP. The protocol supports PTKSA establishment with and without mutual authentication.

MAPC PASN is initialized by the MAPC requesting AP, and has three MAPC Authentication frames exchanged between a MAPC requesting AP and a MAPC responding AP to generate a PTKSA, to protect the individually addressed MAPC Negotiation Request frame and individually addressed MAPC Negotiation Response frame.MAPC PASN uses the PASN procedures defined in 12.13 (Preassociation security negotiation) with the following differences:

— SAE AKMP 00-0F-AC:8 or 00-0F-AC: 24 can be used as the Base AKMP.

— The three MAPC Authentication frames are exchanged between two UHR APs.

— The functionalities of the non-AP STA defined in PASN procedures (see 12.13 (Preassociation security negotiation) shall be performed by the MAPC requesting AP.

— The functionalities of the AP defined in PASN procedures (see 12.13 (Preassociation security negotiation) shall be performed by the MAPC responding AP.

— The three MAPC Authentication frames have the Authentication Algorithm Number field set to 10 (MAPC PASN Authentication).

12.17.2 Discovery of a(#9635, 7648) MAPC PASN capable AP

A UHR AP indicates it is capable of performing MAPC PASN by including the MAPC PASN AKMP as part of the RSNE included in a MAPC Discovery Request frame or a MAPC Discovery Response frame. When a MAPC PASN AKMP is advertised, the UHR AP shall also include at least one additional AKMP in the RSNE

Copyright © 2025 IEEE. All rights reserved.
This is an unapproved IEEE Standards Draft, subject to change.

unless it allows PTKSA derivation without authentication using the ephemeral keys exchanged during MAPC PASN authentication.

12.17.3 Key establishment with MAPC PASN authentication

12.17.3.1 Overview

This subclause defines the procedures for establishing a PTKSA and the corresponding shared keys between the MAPC PASN capable AP. The same procedures as specified in 12.13.1 (Overview) are used with the following differences:

— The three MAPC Authentication frames have the Authentication Algorithm Number field set to 10 (MAPC PASN Authentication).

— MAPC PASN AKMP is used instead of PASN AKMP.

— The RSNE indicates MAPC PASN instead of PASN.

12.17.3.2 MAPC PASN Frame Construction and Processing

The same procedures as specified in 12.13.3.2 (PASN Frame Construction and Processing) are used with the following differences:

— The three MAPC Authentication frames have the Authentication Algorithm Number field set to 10 (MAPC PASN Authentication).

— MAPC PASN AKMP is used instead of PASN AKMP.

— The RSNE indicates MAPC PASN instead of PASN.

— The PTK is generated as specified in 12.17.3.4 (PTKSA derivation with MAPC PASN authentication).

12.17.3.3 MAPC PASN authentication with SAE

The same procedures as specified in 12.13.5 (PASN authentication with SAE) are used.

12.17.3.4 PTKSA derivation with MAPC PASN authentication

The same procedures as specified in 12.13.8 (PTKSA derivation with PASN authentication) are used.

The following modifications shall be used for PTK computation:

— The MAPC requesting AP MAC address is used instead of the SPA.

— The MAPC responding AP MAC address is used instead of the BSSID.

12.17.3.5 MIC Computation with MAPC PASN authentication

12.17.3.5.1 MIC computation for second MAPC PASN frame

The same procedures as specified in 12.13.9.1 (MIC computation for second PASN frame) are used with the following differences:

— The MAPC requesting AP MAC address is used instead of the SPA.

— The MAPC responding AP MAC address is used instead of the BSSID.

— The MAPC responding AP RSN is used instead of Beacon RSNE.

— The MAPC responding AP RSNXE is used instead of Beacon RSNXE.

Copyright © 2025 IEEE. All rights reserved.
This is an unapproved IEEE Standards Draft, subject to change.

12.17.3.5.2 MIC computation for third MAPC PASN frame

The same procedures as specified in 12.13.9.2 (MIC computation for third PASN frame) are used with the following differences:

— The MAPC requesting AP MAC address is used instead of the SPA.

— The MAPC responding AP MAC address is used instead of the BSSID.

Copyright © 2025 IEEE. All rights reserved.
This is an unapproved IEEE Standards Draft, subject to change.

35. Extremely high throughput (EHT) MAC specification

35.8 Restricted TWT (R-TWT)(#7562)

35.8.3 R-TWT announcement

35.8.3.1 Rules for R-TWT scheduling AP

Add a paragraph between the second to last and the last paragraph in 35.8.3.1 (Rules for R-TWT scheduling AP) as shown below:

An R-TWT scheduling AP when announcing an R-TWT schedule, shall set the Target Wake Time field in the TWT element in transmitted Management frames to TSF [10:25], where TSF corresponds to the first R-TWT SP start time of the corresponding R-TWT schedule.

A UHR R-TWT scheduling AP when announcing an R-TWT schedule with the Restricted TWT Schedule Info subfield set to 3, shall set the four MSBs of the Nominal Minimum TWT Wake Duration/Target Wake Time Extension field in the TWT element in transmitted Management frames to TSF [6:9], where TSF corresponds to the start time of the R-TWT SP scheduled for this Restricted TWT parameter set. When the UHR R-TWT scheduling AP announces an R-TWT schedule with the Restricted TWT Schedule Info subfield set to 3, the TSF timer at which that R-TWT is scheduled has bits 0 to 5 equal to 0 and bits 26 to 63 equal to the same value as the respective bits in the current value of the TSF timer of the UHR R-TWT scheduling AP.

The R-TWT scheduling AP shall determine the start time of R-TWT SPs that happen after the first R-TWT SP (next R-TWT SP start time) in a periodic R-TWT schedule based on the start time of the first R-TWT SP and the TWT wake interval of the corresponding R-TWT schedule.

35.8.3.2 Rules for R-TWT scheduled STA

Add the following at the end of subclause 35.8.3.2 (Rules for R-TWT scheduled STA):

When Restricted TWT Schedule Info subfield set to 3, a UHR non-AP STA obtains the start time of the R-TWT SP as follows: the TSF timer at which that R-TWT is scheduled has bits 0 to 5 equal to 0, bits 6 to 9 equal to the four MSBs of the Nominal Minimum TWT Wake Duration/Target Wake Time Extension field, bits 10 to 25 equal to the value of the Target Wake Time field, and bits 26 to 63 equal to the same value as the respective bits in the current value of the TSF timer of the UHR R-TWT scheduling AP.

35.17 EHT SCS procedure

Update the 12th paragraph in subclause 35.17 EHT SCS Procedure in 802.11be as follows:

The SCS Descriptor element that is included in an SCS Response frame shall not contain any Intra-Access Category Priority element, TCLAS Elements field or TCLAS Processing Element field. The Request Type field value in the corresponding SCS Descriptor element is reserved. The following fields in the QoS Characteristics element included in the corresponding SCS Descriptor element in the SCS Response frame may differ from the corresponding values in the requested SCS stream: Minimum Service Interval, Maximum Service Interval, Service Start Time, ~~and~~ Medium Time and LLI Request.

Copyright © 2025 IEEE. All rights reserved.
This is an unapproved IEEE Standards Draft, subject to change.

36. Extremely high throughput (EHT) PHY specification

36.3.11.4 Transmitted signal

Add equation numbers (36-11a) and (36-11b) to two equations after Table 36-26 as follows:

$$N_{20\text{MHz}} = \begin{cases} 1, & \text{if CH_BANDWIDTH is CBW20} \\ 2, & \text{if CH_BANDWIDTH is CBW40} \\ 4, & \text{if CH_BANDWIDTH is CBW80} \\ 8, & \text{if CH_BANDWIDTH is CBW160} \\ 16, & \text{if CH_BANDWIDTH_IN_NON_HT is CBW320 or} \\ & \quad \text{CH_BANDWIDTH is CBW320-1 or CBW320-2} \end{cases} \tag{36-11a}$$

$\Omega_{20\text{MHz}}$ is a set of 20 MHz channels where pre-EHT modulated fields are located. The set of 20 MHz channels contains one or more values in the range 0 to $N_{20\text{MHz}} - 1$ for an EHT MU PPDU with preamble puncturing, or an EHT TB PPDU, and it contains all values in the range 0 to $N_{20\text{MHz}} - 1$ for an EHT MU PPDU without preamble puncturing.

$|\Omega_{20\text{MHz}}|$ is the cardinality of the set of 20 MHz channels $\Omega_{20\text{MHz}}$.

$\varepsilon_{\text{Field}}$ is the power deboosting factor of the corresponding pre-EHT modulated field relative to the L-SIG field defined as:

$$\varepsilon_{\text{Field}} = \begin{cases} \sqrt{\dfrac{N_{\text{L-LTF}}^{\text{Tone}}}{N_{\text{L-SIG}}^{\text{Tone}}}}, & \text{for the L-STF and L-LTF fields} \\ 1, & \text{otherwise} \end{cases} \tag{36-11b}$$

$|K_r|$ is the cardinality of the set of subcarriers K_r.

Γ_r^{Field} equals the number of modulated subcarriers within K_r (see Table 36-23 (Frequently used parameters)) for the EHT-STF and Data fields. For the EHT-LTF field, Γ_r^{Field} is defined as below to ensure per tone power are the same for both EHT-LTF and Data fields, regardless of 1×, 2×, or 4× EHT-LTF.

$$\Gamma_r^{\text{EHT-LTF}} = \begin{cases} |K_r|, & \text{for a } 4 \times \text{EHT-LTF} \\ |K_r|/2, & \text{for a } 2 \times \text{EHT-LTF} \\ |K_r|/4, & \text{for an } 1 \times \text{EHT-LTF} \end{cases}$$

Copyright © 2025 IEEE. All rights reserved.
This is an unapproved IEEE Standards Draft, subject to change.

Insert new Clauses 37 and 38 following Clause 36 as follows:

37. Ultra-high reliability (UHR) MAC specification

37.1 Introduction

The UHR STA MAC and MLME requirements are defined in Clause 37 (Ultra-high reliability (UHR) MAC specification), with additional requirements defined in Clause 35 (Extremely high throughput (EHT) MAC specification), Clause 26 (High efficiency (HE) MAC specification) and Clause 10 (MAC sublayer functional description), the MLME requirements defined in Clause 11 (MLME), and the security functions defined in Clause 12 (Security). When requirements in other clauses overlap with those described in Clause 37 (Ultra-high reliability (UHR) MAC specification), the requirements in Clause 37 (Ultra-high reliability (UHR) MAC specification) supersede the requirements in Clause 10 (MAC sublayer functional description), Clause 11 (MLME), Clause 12 (Security), or Clause 26 (High efficiency (HE) MAC specification) or Clause 35 (Extremely high throughput (EHT) MAC specification).

37.2 UHR channel access

37.2.1 Setting and resetting the NAV with BSRP Trigger frame

A UHR STA shall follow the rules defined in 10.3.2.4 (Setting and resetting the NAV), and the additional following rules, unless otherwise specified:

— A STA that used information from an BSRP Trigger frame or a BSRP NTB Trigger frame as the most recent basis to update its NAV setting is permitted to reset its NAV if no PHYRX-EARLYSIG.indication or PHYRXSTART.indication primitive is received from the PHY during a BSRPNAVTimeout period starting when the MAC receives a PHY-RXEND.indication primitive corresponding to the detection of the BSRP Trigger frame or BSRP NTB Trigger frame. The BSRP-NAVTimeout period is equal to (2 × aSIFSTime) + ICR_Time + aRxPHYStartDelay + (2 × aSlot-Time).

NOTE—The ICR_Time is calculated based on the UL Length field of the received BSRP Trigger frame or BSRP NTB Trigger frame.

37.3 UHR spatial(#7563) reuse operation

A UHR STA follows the rules defined in 35.10.2 (OBSS PD-based spatial reuse operation), except that the condition 5 defined in 26.10.2.2 (General operation with non-SRG OBSS PD level) is updated as follows:

— The received PPDU is one of the following:
  - For non-EHT PPDU, the SPATIAL_REUSE subfield (if present) is not set to PSR_AND_NON_SRG_OBSS_PD_PROHIBITED.
  - For other PPDUs, the SPATIAL_REUSE subfield is present and is not set to PSR_AND_NON_SRG_OBSS_PD_PROHIBITED.

NOTE—As a result, a UHR STA is not allowed to use OBSS PD-based spatial reuse when the received PPDU is a UHR ELR PPDU or a value of PHY Version Identifier field in U-SIG is one of Validate values.

An AP shall not enable PSR spatial reuse if NPCA operation is enabled as described in 37.18 (Non-primary channel access (NPCA)).

Copyright © 2025 IEEE. All rights reserved.
This is an unapproved IEEE Standards Draft, subject to change.

37.4 UHR MU operation

37.4.1 UHR DL MU operation

37.4.1.1 General

When transmitting or receiving a UHR MU PPDU, the rules defined in 35.5.1.1 (General) and 35.5.1.2 (RU allocation in an EHT MU PPDU) that apply to an EHT MU PPDU shall also apply to the UHR MU PPDU. In cases where a rule in 35.5.1.1 (General) or 35.5.1.2 (RU allocation in an EHT MU PPDU) refers to RUs and MRUs in an EHT MU PPDU, the rules also apply to RUs and MRUs in a UHR MU PPDU along with the additional rules defined below.

A UHR AP shall not transmit a UHR MU PPDU with an RU or MRU that is narrower than the PPDU bandwidth and that is allocated to more than one STA (DL MU-MIMO within OFDMA) unless the AP has received from each STA a UHR Capabilities element with the Partial Bandwidth DL MU-MIMO field in the UHR PHY Capabilities Information field equal to 1.

37.4.1.2 RU allocation in a UHR MU PPDU

A UHR STA shall follow the rules defined below and, in 26.5.1.3 (RU allocation in an HE MU PPDU) and in 35.5.1.2 (RU allocation in an EHT MU PPDU), where

— Rules related to HE or EHT STAs also apply to UHR STAs.

— Rules related to HE or EHT MU PPDUs also apply to UHR MU PPDUs.

— Rules related to RUs in an HE MU PPDU or RUs and MRUs in an EHT MU PPDU also applies to RUs and MRUs in a UHR MU PPDU

In a 40 MHz, 80 MHz, 160 MHz or 320 MHz UHR MU PPDU, an AP shall not allocate to a 20 MHz operating non-AP STA an RU or MRU that is not supported by the STA as indicated in 38.3.2.4 (RU and MRU restrictions for 20 MHz operation).

A UHR AP (#10421, 6082, 6794, 7652, 8886, 9425, 9245)that has not switched to the NPCA primary channel, or that is not a DSO AP initiating a DSO frame exchange requiring the DSO non-AP STA(s) to switch to the DSO subband, shall not allocate any RU or MRU outside of the primary 20 MHz in a 40 MHz, 80 MHz, 160 MHz, or 320 MHz UHR MU or UHR TB PPDU to a 20 MHz operating non-AP UHR STA.

A UHR AP, while it has not switched to the NPCA primary channel or not a DSO AP initiating a DSO frame exchange that requires the DSO non-AP STA(s) to switch to the DSO subband, shall not allocate an RU or MRU in the secondary 160 MHz channel of a 320 MHz UHR MU PPDU or UHR TB PPDU to an 80 MHz operating non-AP UHR STA. A UHR AP, while it has not switched to the NPCA primary channel or not a DSO AP initiating a DSO frame exchange that requires the DSO non-AP STA(s) to switch to the DSO subband, shall not allocate an RU or MRU in the secondary 80 MHz channel of a 160 MHz or 320 MHz UHR MU or UHR TB PPDU to an 80 MHz operating non-AP UHR STA.

A UHR AP (#10423)that has not switched to the NPCA primary channel, or that is not a DSO AP initiating a DSO frame exchange requiring the DSO non-AP STA(s) to switch to the DSO subband, shall not allocate any RU or MRU in the secondary 160 MHz channel of a 320 MHz UHR MU PPDU or UHR TB PPDU to a 160 MHz operating non-AP UHR STA.

A UHR AP that is an NPCA AP that has switched to the NPCA primary channel, shall not allocate an RU or MRU to (#5770)any of the following:

— An associated 20 MHz operating non-AP NPCA STA in any of channel(s) other than the 20 MHz channel including the NPCA primary channel in a 20, 40, 80, 160 or 320 MHz UHR MU or UHR TB PPDU.

Copyright © 2025 IEEE. All rights reserved.
This is an unapproved IEEE Standards Draft, subject to change.

— An associated 80 MHz operating non-AP NPCA STA in any of channel(s) other than the 80 MHz channel including the NPCA primary channel in an 80, 160 or 320 MHz UHR MU or UHR TB PPDU.
— An associated 160 MHz operating non-AP NPCA STA in any of channel(s) other than the 160 MHz channel including the NPCA primary channel in a 160 or 320 MHz UHR MU or UHR TB PPDU.

37.4.2 UHR UL MU operation

37.4.2.1 General

UHR UL MU operation allows an AP to solicit simultaneous immediate response frames from one or more non-AP UHR STAs. UHR UL MU operation expands the UL MU functionalities inherited from EHT (#11185)with the addition of the rules described in 38.3.2.2 (Tone plan for DRUs) and 38.3.4 (Transmission of DRU). The rules defined in 35.5.2.1 (General) that apply to an EHT STA shall also apply to a UHR STA.

A UHR AP shall not set the UL UHR-MCS field of a UHR variant User Info field to 15 in a Trigger frame if the RU assigned by that User Info field is used for UL MU MIMO transmission (#9016)or DRU transmission.

(#9116)A UHR AP shall set the UL FEC Coding Type field of a UHR variant User Info field to 1 in a Trigger frame if the RU assigned by that User Info field is used for UL MU MIMO transmission.

A non-AP UHR STA shall set the UHR TRS Support field in the UHR MAC Capabilities Information field in the UHR Capabilities element to 1 if dot11UHRTRSOptionImplemented is true; otherwise, the STA shall set the field to 0.

A UHR AP shall not include the Special User Info field in a Trigger frame if the Trigger frame does not include an EHT or UHR variant User Info field.

37.4.2.2 Rules for soliciting UL MU frames

37.4.2.2.1 General

A UHR STA shall follow the rules below and defined in 35.5.2.2.1 (General), where

— Rules related to EHT STAs also apply to UHR STAs.
— Rules related to triggering frames (#9018)soliciting EHT TB PPDUs also apply to triggering frames soliciting UHR TB PPDUs.
— Rules related to Trigger frame being aggregated in an A-MPDU within a(#5885) UHR MU PPDU follows that of EHT MU PPDU.

A UHR AP shall not transmit an HE or EHT PPDU that carries a Trigger frame soliciting a UHR TB PPDU.

A UHR AP shall not transmit a UHR PPDU that carries a Trigger frame soliciting an HE or EHT TB PPDU.

A UHR AP shall not transmit a Trigger frame soliciting an OFDMA transmission using a UHR TB PPDU that uses UL MU-MIMO within an RU or MRU to a non-AP UHR STA from which the AP has not received a UHR Capabilities element with the Partial Bandwidth UL MU-MIMO field of the UHR Capabilities Information field equal to 1.

In a 40 MHz, 80 MHz, 160 MHz, or 320 MHz UHR TB PPDU, an AP shall not allocate to a 20 MHz operating non-AP STA an RU or MRU that is not supported by the STA as defined in 38.3.2.4 (RU and MRU restrictions for 20 MHz operation).

Copyright © 2025 IEEE. All rights reserved.
This is an unapproved IEEE Standards Draft, subject to change.

37.4.2.2.2 Requirements for allocating resources

A UHR AP shall follow the requirements for allocating resources specified in 35.5.2.2.2 (Requirements for allocating resources) where rules related to EHT STAs also apply to UHR STAs, and rules related to EHT TB PPDUs also apply to UHR TB PPDUs.

37.4.2.2.3 Allowed settings of the Trigger frame fields and TRS Control subfield

A UHR AP may transmit a Trigger frame that solicits a UHR TB PPDU from a UHR STA subject to the rules defined in 26.5.2.2 (Rules for soliciting UL MU frames), 35.5.2.2 (Rules for soliciting UL MU frames) and the additional rules defined below.

A UHR AP shall not transmit a Trigger frame that solicits (#8887)any of the following:

— an HE TB PPDU and an EHT TB PPDU together.
— an HE TB PPDU and a UHR TB PPDU together.
— an EHT TB PPDU and a UHR TB PPDU together.
— an HE TB PPDU, an EHT TB PPDU and a UHR TB PPDU together.

A UHR AP shall set the UL Length field of a transmitted Trigger frame that solicits a UHR TB PPDU to the value given by Equation (27-11) with m = 2, except that TXTIME is defined by Equation (38-75) in 38.4.3 (TXTIME and PSDU_LENGTH calculation).

NOTE—This is the same rule as that of an AP that transmits a Trigger frame that solicits an HE TB PPDU (see 26.5.2.2.4 (Allowed settings of the Trigger frame fields and TRS Control field)) or EHT TB PPDU (see 35.5.2.2.4 (Allowed settings of the Trigger frame fields and TRS Control field)).

An AP shall not send a frame with a TRS Control field that solicits a UHR TB PPDU to a non-AP STA from which the AP has not received a UHR MAC Capabilities Information field in the UHR Capabilities element with the UHR TRS Support field equal to 1.

An AP shall not send a PPDU that is not a UHR PPDU, that carries a TRS Control field soliciting a transmission of UHR TB PPDU.

37.4.2.3 Non-AP STA behavior for UL MU operation

37.4.2.3.1 General

A UHR STA shall follow the rules below and defined in 35.5.2.3.1 (General), where

— Rules related to EHT STAs also apply to UHR STAs.
— Rules related to EHT variant User Info field also apply to UHR variant User Info field.
— Rules related to (#9019)EHT TB PPDUs also apply to UHR TB PPDUs.

(#5087)When a non-AP UHR STA receives a Trigger frame that is not MU-RTS or BSRP NTB Trigger frame, and that contains a User Info field with an AID12 field that matches the STA's AID, the STA shall respond as follows:

— If the User Info field is an HE variant, respond with an HE TB PPDU.
— If the User Info field is an EHT variant, respond with an EHT TB PPDU.
— If the User Info field is a UHR variant, respond with a UHR TB PPDU.

Copyright © 2025 IEEE. All rights reserved.
This is an unapproved IEEE Standards Draft, subject to change.

A non-AP UHR STA shall not send a UHR TB PPDU unless the STA is explicitly triggered by an AP in the operation modes described in 37.4.2.3.2 (TXVECTOR parameters for UHR TB PPDU response to Trigger frame).

37.4.2.3.2 TXVECTOR parameters for UHR TB PPDU response to Trigger frame

Editor's Note: It is a placeholder subclause

37.4.2.3.3 TXVECTOR parameters for UHR TB PPDU response to TRS Control subfield

Editor's Note: It is a placeholder subclause

37.4.2.3.4 Conditions for not responding with a TB PPDU

A UHR STA shall follow the rules defined in (#9343)35.5.2.3.4 (Conditions for not responding with a TB PPDU), where

— Rules related to EHT STAs also apply to UHR STAs.

— Rules related to triggering frames (#9021)soliciting EHT TB PPDUs also apply to triggering frames soliciting UHR TB PPDUs.

— Rules related to EHT TB PPDUs also apply to UHR TB PPDUs.

37.5 Intra-BSS and inter-BSS PPDU classification for UHR STA

A UHR STA shall follow the rules defined in 35.2.3 (Intra-BSS and inter-BSS PPDU classification for EHT STA) to classify a PPDU as intra-BSS or inter-BSS PPDU, with the following addition:

— Rules related to an EHT MU PPDU that is not in an EHT SU transmission also apply to a UHR MU PPDU that is not in a UHR SU transmission

A UHR STA shall classify a received PPDU as an inter-BSS PPDU if all of the following conditions are met:

— the PPDU is a UHR MU PPDU where the RXVECTOR parameter UPLINK_FLAG is 0

— the RXVECTOR parameter PPDU_TYPE is 1 or 2

— the RXVECTOR parameter BSS_COLOR and the RXVECTOR parameter BSS_COLOR_2 are not 0 and are not the BSS color of the BSS of which the STA is a member

— the BSS color is not disabled (see 26.17.3.3 (Disabling BSS color)).

A UHR STA shall classify the received PPDU as an intra-BSS PPDU if all of the following conditions are met:

— the PPDU is a UHR MU PPDU where the RXVECTOR parameter UPLINK_FLAG is 0,

— the RXVECTOR parameter PPDU_TYPE is 1 or 2

— one of the RXVECTOR parameter BSS_COLOR and the RXVECTOR parameter BSS_COLOR_2 is the BSS color of the BSS of which the STA is a member or the BSS color of any TDLS direct links to which the STA belongs if the STA is a UHR STA associated with a non-UHR AP

— the BSS color is not disabled (see 26.17.3.3 (Disabling BSS color)).

37.6 Prioritized EDCA (P-EDCA)(#6086)

Prioritized EDCA (P-EDCA) is an enhancement of the EDCA mechanism (see 10.23.2 (HCF contention based channel access (EDCA)) that reduces the access delay distribution tail for AC_VO traffic. The use of

Copyright © 2025 IEEE. All rights reserved.
This is an unapproved IEEE Standards Draft, subject to change.

P-EDCA by a UHR STA balances the impact on STAs that do not support (#8252)or that do not enable P-EDCA by the rules and restrictions that are defined below.

A STA that has dot11PEDCAOptionActivated equal to true is called a P-EDCA STA and shall set the P-EDCA Support field(#8253) of the UHR MAC Capabilities Information field of the UHR Capabilities element to 1, otherwise the STA shall set the P-EDCA Support field(#8253) of the UHR MAC Capabilities Information field of the UHR Capabilities element to 0.

An AP that intends to enable, disable or update the parameters of P-EDCA mode shall follow the procedure defined in 37.32 (Enhanced BSS parameter critical update procedure(#12610)) to notify its associated non-AP STAs. An AP that has enabled P-EDCA operation shall set the P-EDCA Enabled field in (#7655 8676 8890)the UHR Operation element to 1.

If the most recent (#7656)Mode Tuple field corresponding to P-EDCA from the AP does not carry the Mode Specific Parameters field for P-EDCA, then the default P-EDCA parameters specified in this subclause shall apply.

When a non-AP STA that supports P-EDCA mode (re)associates with an AP, P-EDCA mode is disabled by default for the non-AP STA. A UHR non-AP STA that supports P-EDCA mode and that intends to enable or disable P-EDCA mode shall follow the procedure defined in 37.31 (Procedure for operating mode and parameter updates). The associated AP shall accept the request and follow the procedure defined in 37.31 (Procedure for operating mode and parameter updates).

NOTE 1(#6338)—For a non-AP STA to enable P-EDCA mode, the associated AP must support P-EDCA and must have P-EDCA enabled for the BSS (see 37.31 (Procedure for operating mode and parameter updates)).

P-EDCA STAs shall maintain a P-EDCA STA retry counter, PSRC[AC_VO]. The initial value for PSRC[AC_VO] shall be 0. PSRC[AC_VO] shall be incremented by 1 with every transmission of the (#6798)Defer Signal CTS (DS-CTS) frame. PSRC[AC_VO] shall be set to 0 when QSRC[AC_VO] is set to 0.

A P-EDCA STA may start a P-EDCA contention if all of the following conditions are satisfied:

— P-EDCA is enabled by the AP in the BSS and the P-EDCA non-AP STA has notified the AP of its intent to use P-EDCA on the link.
— The P-EDCA STA has pending AC_VO buffered traffic.(#4189, 4822)
— QSRC[AC_VO] is equal to(#4555, 7657, 12651) or greater than dot11PEDCARetryThreshold and PSRC[AC_VO] is less than dot11PEDCAConsecutiveAttempt.(#4189, 4823)

To start the P-EDCA contention, the P-EDCA STA shall transmit a (#6798)DS-CTS frame. (#7658, 8693)The transmission of the DS-CTS frame shall occur at the DSAIFS[AC_VO] slot boundary if the STA's CS mechanism (see 10.3.2.1 (CS mechanism)) determines that the medium is idle.

The DSAIFS[AC_VO] is a duration derived from the (#4262)following equation:

$$\text{DSAIFS[AC_VO]} = \text{aSIFSTime} + (\text{AIFSN} + \text{DS}_r) \times \text{aSlotTime}$$

where AIFSN is 2 and DS_r is an integer value chosen randomly with a uniform distribution taking values in the range 0 to CW_{ds}[AC_VO] for every transmission of DS-CTS frame.(#7658 8693) The DS-CTS frame shall be transmitted in a non-HT(#5167) or non-HT duplicate PPDU format, using 6 Mb/s data rate, and SCRAMBLER_INITIAL_VALUE is fixed as [0, 0, 0, 0, 0, 1, 0] (seed value = 32). The RA field shall be set to the MAC address 00:0F:AC:47:43:00, and the Duration field shall be set to the value of the P-EDCA contention duration in Table 37-1 (Default P-EDCA parameter set).

Copyright © 2025 IEEE. All rights reserved.
This is an unapproved IEEE Standards Draft, subject to change.

The P-EDCA contention shall start immediately after the end of the transmitted DS-CTS frame and shall follow the random backoff procedure defined in 10.23.2.4 (Obtaining an EDCA TXOP) except that:

— Only EDCAF[AC_VO] shall be allowed to contend during the P-EDCA contention. Operation of the other EDCAFs is suspended.

— The EDCAF[AC_VO] shall initialize AIFSN, CWmin, and CWmax with the values of P-EDCA AIFSN, P-EDCA CWmin, and P-EDCA CWmax respectively. CW[AC_VO] shall be initialized to CWmin[AC_VO].

— The EDCAF[AC_VO] shall set the backoff counter to an integer value chosen randomly with a uniform distribution taking values in the range 0 to CW[AC_VO].

Table 37-1 (Default P-EDCA parameter set) defines the default P-EDCA (#4824 7659)parameters used by a P-EDCA STA when the AP does not advertise a P-EDCA parameter set for the P-EDCA contention, for the transmission of a DS-CTS frame, and for the conditions to start P-EDCA (#5168)contention. If the AP advertises (#4825 7660)a P-EDCA parameter set for the parameters in Table 37-1 (Default P-EDCA parameter set), then the P-EDCA STA shall update the P-EDCA parameter set to the most (#4825)recently received P-EDCA parameter set.

A P-EDCA STA that initiates a TXOP (see 10.23.2.4) during a P-EDCA contention shall transmit an RTS frame as (#7661)the initial frame in the TXOP.

Table 37-1—Default P-EDCA parameter set

AC	P-EDCA CWmin	P-EDCA CWmax	P-EDCA AIFSN	P-EDCA contention duration	CW_{ds}	P-EDCA PSRC threshold	P-EDCA QSRC threshold
AC_VO	7	7	2	97 µs	0	1	2
NOTE 1—The NAV set by the Duration field of the DS-CTS frame protects the medium for the maximum P-EDCA contention duration: aSIFSTime + (AIFSN + CWMax) * aSlotTime. Hence, the values relate as follows: 97 µs = 16 µs + (2 + 7) × 9 µs NOTE 2—The value of the P-EDCA contention duration is fixed and is not advertised by the AP.							

A P-EDCA STA that successfully (as defined in 10.23.2.2 EDCA Backoff procedure) delivered one or more pending MPDUs in a TXOP obtained during P-EDCA contention shall not start P-EDCA contention until conditions to start P-EDCA (#5168)contention are satisfied. Additionally, the EDCAF[AC_VO] shall update AIFSN, CWmin, and CWmax with the values in dot11EDCATable (dot11QAPEDCATable for the AP) and an operation of EDCAF[AC_VI], EDCAF[AC_BE], EDCAF[AC_BK] is resumed. Additionally, CW[AC_VO] shall be initialized to CWmin[AC_VO].

NOTE 2(#6338)—After successful delivery of one or more pending MPDUs the STA resets QSRC[AC_VO], therefore conditions to start P-EDCA contention are no longer satisfied.

A P-EDCA STA that participated in a P-EDCA contention but did not initiate a TXOP (see 10.23.2.4) during the P-EDCA contention or that initiated a TXOP but did not receive the CTS frame in response to the RTS frame used to initiate the TXOP may start another P-EDCA contention by sending the DS-CTS frame at DSAIFSN[AC_VO] slot boundary if the STA's CS mechanism (see 10.3.2.1 (CS mechanism))(#5055, 7197) determines that the medium is idle, for up to dot11PEDCAConsecutiveAttempt. If PSRC[AC_VO] reaches dot11PEDCAConsecutiveAttempt transmission attempts, the P-EDCA STA shall not attempt to start P-EDCA contention until the QSRC[AC_VO] counter is reset and all the conditions to start P-EDCA (#5198) contention defined in this subclause are satisfied. Additionally, the EDCAF[AC_VO] shall update the AIFSN, CWmin, and CWmax with the values in dot11EDCATable (dot11QAPEDCATable for the AP) and an operation of the EDCAF[AC_VI], EDCAF[AC_BE], EDCAF[AC_BK] is resumed. Additionally,

Copyright © 2025 IEEE. All rights reserved.
This is an unapproved IEEE Standards Draft, subject to change.

CW[AC_VO] shall be set to the lesser of CWmax[AC_VO] and $2^{QSRC[AC_VO]} \times$ (CWmin[AC_VO] + 1) – 1(#7196, 8256, 4826) (see 10.23.2.2 EDCA backoff procedure).

NOTE 3(#6338)—The STA follows the EIFS, CTSTimeout, and NAVTimeout deferral rules before attempting to transmit a DS-CTS to start a P-EDCA contention.

37.7 UHR Acknowledgement Procedure

37.7.1 Overview

The UHR acknowledgment procedure builds on the features defined for HT-immediate block ack (see 10.25.6 (HT-immediate block ack extensions)), HE acknowledgement (see 26.4 (HE acknowledgment procedure)) and EHT acknowledgement (see 35.4 (EHT acknowledgment procedure)).

A UHR AP that sends a PPDU that solicits an acknowledgment or block acknowledgment from a UHR STA, which has enabled DUO or has enabled LLI, shall ensure that 1) the value of the Duration/ID field of MPDU(s) carried in the PPDU, and 2) the resources that are allocated in any triggering frames carried in the PPDU, are calculated to account for an immediate response that is a Multi-STA BlockAck frame that, in addition to Per AID TID Info field(s) that contain the solicited (block) acknowledgment context(s), also contains at least

— One Per AID TID Info field that carries unavailability feedback if the non-AP STA has enabled DUO (see 37.19.2 (Dynamic (#7566)unavailability operation (DUO) mode)) [8 octets]

— One Per AID TID Info field that carries low-latency feedback if the non-AP STA has enabled LLI (see 37.24 (Low-latency indication (LLI))) [8 octets]

— Zero or more Per AID TID Info fields that carry padding [variable octets].

A UHR non-AP STA that sends a PPDU that solicits an acknowledgment or block acknowledgment from a peer UHR STA, shall ensure that the value of the Duration/ID field of the MPDU(s) carried in the PPDU are calculated to account for an immediate response that is a Multi-STA BlockAck frame that, in addition to the Per AID TID Info field(s) that contain the solicited (block) acknowledgment context(s), also contains at least:

— Zero or more Per AID TID Info fields that carry padding [variable octets].

A UHR STA, which has enabled DUO or has enabled LLI that receives a PPDU that contains frames requiring an acknowledgment or block acknowledgment shall respond with a Multi-STA BlockAck frame that, in addition to the acknowledgment context(s) defined in 26.4.2 (Acknowledgment context in a Multi-STA BlockAck frame, shall contain after the Per AID TID Info fields with acknowledgment context(s) at least:

— Zero or one Per AID TID Info field that carries unavailability feedback if the STA is a non-AP STA that has enabled DUO (see 37.19.2 (Dynamic (#7566)unavailability operation (DUO) mode)) (8 octets)

— Zero or one Per AID TID Info field that carries low-latency feedback if the STA is a non-AP STA that has enabled LLI (see 37.24 (Low-latency indication (LLI))) [8 octets]

— Zero or more Per AID TID Info fields that carry padding [variable octets]

The total number of Per AID TID Info fields in the BA Information field of the Multi-STA BlockAck frame shall be greater than zero, the Per AID TID Info fields shall appear in the BA Information field in the same order of appearance as in the above list except that low-latency feedback may appear before unavailability feedback, and no Per AID TID Info fields shall appear after the last Per AID TID Info field that carries padding, if such a Per AID TID Info field is present.

Copyright © 2025 IEEE. All rights reserved.
This is an unapproved IEEE Standards Draft, subject to change.

A UHR STA that receives a Multi-STA BlockAck frame that is a response to frames soliciting it shall examine and process each Per AID TID Info field received in the Multi-STA BlockAck frame using the procedure defined in 26.4.2 (Acknowledgment context in a Multi-STA BlockAck frame), and 37.19.2 (Dynamic (#7566)unavailability operation (DUO) mode) or 37.24 (Low-latency indication (LLI)) when feedback context is also carried in the same Multi-STA BlockAck frame.

A UHR STA that responds to a UHR MU PPDU with a UHR TB PPDU follows the same rules as an EHT STA that responds to an HE MU PPDU, HE SU PPDU or HE ER SU PPDU with a TB PPDU as defined in 26.4.4.4 (Responding to an HE MU PPDU, HE SU PPDU, or HE ER SU PPDU with an HE TB PPDU) with the following changes:

— Replacing HE MU PPDU, HE SU PPDU or HE ER SU PPDU by UHR MU PPDU
— Replacing HE TB PPDU by UHR TB PPDU
— Replacing HE STA by UHR STA.

A UHR STA that transmits a UHR ELR PPDU follows the rules defined in 37.10.2 (Enhanced long range (ELR) operation)).

A UHR STA that responds to a UHR MU PPDU with a PPDU carrying a frame addressed to a single STA follows the same rules as an HE STA that responds to an HE MU PPDU with an SU PPDU as defined in 26.4.4.3 (Responding to an HE MU PPDU with an SU PPDU) with the following changes:

— Replacing HE MU PPDU by UHR MU PPDU
— Replacing SU PPDU by a PPDU carrying a frame addressed to a single STA
— Replacing HE STA by UHR STA.

A UHR AP that responds to a UHR TB PPDU with a PPDU other than a UHR MU PPDU addressed to multiple STAs follows the same rules as an HE AP that responds to an HE TB PPDU with an SU PPDU as defined in 26.4.4.5 (Responding to an HE TB PPDU with an SU PPDU) with the following changes:

— Replacing HE TB PPDU by UHR TB PPDU
— Replacing SU PPDU by a PPDU carrying a frame addressed to a single STA
— Replacing HE STA by UHR STA.

A UHR AP that responds to a UHR TB PPDU with a UHR MU PPDU follows the same rules as an HE AP that responds to an HE TB PPDU with an HE MU PPDU as defined in 26.4.4.6 (Responding to an HE TB PPDU with an HE MU PPDU) with the following changes:

— Replacing HE TB PPDU by UHR TB PPDU
— Replacing HE MU PPDU by UHR MU PPDU
— Replacing HE STA by UHR STA.

37.8 Rules for initial Control and initial Control response frames

37.8.1 General

UHR defines four initial Control frames (ICFs) that are used for different modes of operation (i.e., DPS, NPCA, EMLSR, DUO and DSO), namely RTS, MU-RTS Trigger, BSRP Trigger, and BSRP NTB Trigger frames. An ICF can be used for more than one mode and a mode can use more than one ICF subject to the rules in this subclause.

A UHR non-AP STA that is required to send an ICF to an AP for mobile AP DPS or NPCA shall use an RTS, or BSRP NTB Trigger frame as the ICF subject to the following:

Copyright © 2025 IEEE. All rights reserved.
This is an unapproved IEEE Standards Draft, subject to change.

— The ICF shall satisfy the requirements defined in 37.17.1 (Dynamic power save (DPS) operation) if the mobile AP has enabled DPS.

— If the ICF is sent on the NPCA primary channel, then the ICF shall additionally satisfy the requirements defined in 37.18 (Non-primary channel access (NPCA)).

- RTS is not allowed in the NPCA primary channel

— If the UHR non-AP STA has enabled DUO, then the STA shall additionally follow the requirements defined in 37.19.2 (Dynamic (#7566)unavailability operation (DUO) mode) if the ICF carries unsolicited unavailability feedback.

A UHR AP that is required to send an ICF to a non-AP STA, for non-AP STA DPS, NPCA, EMLSR, DUO, or DSO, shall use an RTS, MU-RTS Trigger, BSRP Trigger, or BSRP NTB Trigger frame as the ICF subject to the following:

— The ICF shall satisfy the requirements defined in 37.17.1 (Dynamic power save (DPS) operation) if the STA has enabled DPS, the requirements defined in 37.21 (Enhanced multi-link single-radio (EMLSR) operation for a UHR non-AP MLD) if the STA is affiliated with a non-AP MLD and is operating on an EMLSR link, and the requirements defined in 37.19.2 (Dynamic (#7566)unavailability operation (DUO) mode) if the STA has enabled DUO.

- RTS frame is not allowed unless the STA has only enabled DPS with zero length DPS padding.
- MU-RTS Trigger frame is not allowed if DUO is enabled.
- BSRP NTB Trigger frame is allowed but only if DUO is enabled; otherwise, is not allowed.

— If the ICF is sent on the NPCA primary channel, then the ICF shall additionally satisfy the requirements defined in 37.18 (Non-primary channel access (NPCA)).

- RTS is not allowed on the NPCA primary channel,
- BSRP NTB Trigger is allowed but only if DUO is enabled; otherwise, is not allowed.

— If the ICF is intended to cause the STA to switch to a DSO subband then the ICF shall additionally satisfy the requirements defined in 37.26 (Dynamic subband operation (DSO)(#7567)).

- RTS, MU-RTS Trigger and BSRP NTB Trigger frames are not allowed.

A UHR STA that transmits an ICF that is an MU-RTS Trigger, BSRP Trigger, or BSRP NTB Trigger frame, in addition to satisfying the requirements defined in 35.5.2.2.3 (Padding for a Trigger frame), shall also satisfy any applicable requirements that are defined in 37.22 (Use and requirements of initial Control frames), and in the subclauses below.

A UHR STA shall carry an ICF in a non-HT PPDU or a non-HT duplicate PPDU.

A UHR STA responds to an RTS frame and to an MU-RTS Trigger frame as defined in 10.3.2.9 (CTS and DMG CTS procedure) and in 35.2.2 (MU-RTS Trigger/CTS frame exchange procedure for EHT STAs), respectively, and responds to a BSRP Trigger and BSRP NTB Trigger frames as defined in the subclauses below while satisfying the requirements defined in 37.2.1 (Setting and resetting the NAV with BSRP Trigger frame).

37.8.2 BSRP Trigger frame soliciting a TB PPDU

A UHR AP that transmits a BSRP Trigger frame to a UHR non-AP STA shall allocate, within the BSRP Trigger frame, sufficient resources for the STA to generate a TB PPDU response that:

— Contains one or more QoS Null frames as required by 26.5.2.4 (A-MPDU contents in an HE TB PPDU) if the UHR non-AP STA has not enabled DUO, and has not enabled LLI or,

— Contains one Multi-STA BlockAck frame, in addition to the one or more QoS Null frames required by 26.5.2.4 (A-MPDU contents in an HE TB PPDU), if the non-AP STA has enabled DUO or has enabled LLI, wherein the Multi-STA BlockAck frame is expected to contain at least all of the following Per AID TID Info fields:

Copyright © 2025 IEEE. All rights reserved.
This is an unapproved IEEE Standards Draft, subject to change.

- One Per AID TID Info field with Ack Type field equal to 1 and TID field equal to 13 (2 octets).
- One Per AID TID Info field that carries unavailability feedback if the non-AP STA has enabled DUO (see 37.19.2 (Dynamic (#7566)unavailability operation (DUO) mode)) (8 octets).
- One Per AID TID Info field that carries low-latency feedback if the non-AP STA has enabled LLI (see 37.24 (Low-latency indication (LLI))) (8 octets).
- Zero or more Per AID TID Info fields that carry padding (variable octets).

A UHR non-AP STA that receives a BSRP Trigger frame from its associated UHR AP, which addresses the STA in a User Info field of the BSRP Trigger frame, shall respond, subject to the rules defined in 26.5.2 (UL MU operation), with a TB PPDU that:

— Contains one or more QoS Null frames as required by 26.5.2.4 (A-MPDU contents in HE TB PPDU) if the non-AP STA has not enabled DUO, and has not enabled LLI, or

— Contains one Multi-STA BlockAck frame, in addition to the one or more QoS Null frames required by 26.5.2.4 (A-MPDU contents in an HE TB PPDU), if the non-AP STA has enabled DUO or has enabled LLI, wherein the Multi-STA BlockAck frame shall be the first MPDU of the A-MPDU and shall contain at least the following Per AID TID Info fields:

  - Zero or one Per AID TID Info field with Ack Type field equal to 1 and TID field equal to 13 (2 octets).
  - Zero or one Per AID TID Info field that carries unavailability feedback if non-AP STA has enabled DUO (see 37.19.2 (Dynamic (#7566)unavailability operation (DUO) mode)) (8 octets).
  - Zero or one Per AID TID Info field that carries low-latency feedback if the non-AP STA has enabled LLI (see 37.24 (Low-latency indication (LLI))) (8 octets).
  - Zero or more Per AID TID Info fields that carry padding, which may be used to ensure that the length of the response TB PPDU is equal to the length of the TB PPDU that is solicited by the BSRP Trigger frame (variable octets). The non-AP STA may also use A-MPDU padding, instead of Per AID TID Info fields that carry padding, to satisfy any of these requirements.

The total number of Per AID TID Info fields in the BA Information field of the Multi-STA BlockAck frame shall be greater than zero, and there shall be at least one Per AID TID Info field that is either

— a Per AID TID Info field with Ack Type equal to 1 and TID equal to 13 (ICR context) or,

— a Per AID TID Info field that carries unavailability feedback or,

— a Per AID TID Info field that carries low-latency feedback.

The Per AID TID Info fields shall appear in the BA Information field in the same order of appearance as in the above list except that low-latency feedback may appear before unavailability feedback, and no Per AID TID Info fields shall appear after the last Per AID TID Info field that carries padding, if such a Per AID TID Info field is present.

37.8.3 BSRP NTB Trigger frame soliciting a non-HT (duplicate) PPDU

A UHR STA that transmits a BSRP NTB Trigger frame to a peer UHR STA shall set the UL length field of the BSRP NTB Trigger frame to the value of the L-SIG LENGTH field of the response non-HT (duplicate) PPDU, and shall ensure that the value is calculated assuming that the response PPDU is sent using a rate that is equal to the primary rate, which is defined below, and that the PPDU includes a Multi-STA BlockAck frame that contains at least all the following Per AID TID Info fields:

— One Per AID TID Info field with Ack Type field equal to 1 and TID field equal to 13 (2 octets).

— One Per AID TID Info field that carries unavailability feedback if the peer STA is a non-AP STA that has enabled DUO (see 37.19.2 (Dynamic (#7566)unavailability operation (DUO) mode)) (8 octets).

— One Per AID TID Info field that carries low-latency feedback if the peer STA is a non-AP STA that has enabled LLI (see 37.24 (Low-latency indication (LLI))) (8 octets).

Copyright © 2025 IEEE. All rights reserved.
This is an unapproved IEEE Standards Draft, subject to change.

— Zero or more Per AID TID Info fields that carry padding (variable octets).

A UHR STA that receives a BSRP NTB Trigger frame from its peer UHR STA, which addresses the STA in a User Info field of the BSRP NTB Trigger frame, shall respond, subject to the rules defined in 26.5.2.5 (UL MU CS mechanism), with a non-HT (duplicate) PPDU that:

— Has the L-SIG LENGTH equal to the value of the UL Length field of the soliciting BSRP NTB Trigger frame.
— Has a rate that is equal to either the primary rate or the alternate rate, if one exists, wherein:
  - The primary rate is defined as the highest rate in the BSSBasicRateSet parameter that is less than or equal to the rate (or non-HT reference rate; see 10.6.11 (Non-HT basic rate calculation)) of the BSRP NTB Trigger frame. If no rate in the BSSBasicRateSet parameter meets these conditions, the primary rate is defined to be the highest mandatory rate of the attached PHY that is less than or equal to the rate (or non-HT reference rate; see 10.6.11 (Non-HT basic rate calculation)) of the BSRP NTB Trigger frame.
  - The alternate rate is defined as the rate that is selected following the rules in 10.6.6.5.4 (Selection of an alternate rate or MCS for a control response frame).
— Carries an individually addressed Multi-STA BlockAck frame that contains at least:
  - Zero or one Per AID TID Info field with Ack Type field equal to 1 and TID field equal to 13 (2 octets).
  - Zero or one Per AID TID Info field that carries unavailability feedback if the peer STA is a non-AP STA that has enabled DUO (see 37.19.2 (Dynamic (#7566)unavailability operation (DUO) mode)) (8 octets).
  - Zero or one Per AID TID Info field that carries low-latency feedback if the peer STA is a non-AP STA that has enabled LLI (see 37.24 (Low-latency indication (LLI))) (8 octets).
  - Zero or more Per AID TID Info fields that carry padding, and is used to ensure that the length of the response PSDU is equal to the UL Length field of the BSRP NTB Trigger frame (variable octets).

The total number of Per AID TID Info fields in the BA Information field of the Multi-STA BlockAck frame shall be greater than zero, the Per AID TID Info fields shall appear in the BA Information field in the same order of appearance as in the above list except that low-latency feedback may appear before unavailability feedback, and no Per AID TID Info fields shall appear after the last Per AID TID Info field that carries padding, if such a Per AID TID Info field is present.

37.9 A-MPDU operation in a UHR PPDU

A-MPDU operation for a UHR PPDU shall follow the procedure defined in 10.12 (A-MPDU operation), where:

— Rules related to an EHT (mesh) STA and an EHT AP also apply to a UHR (mesh) STA and a UHR AP.
— Rules related to an EHT PPDU also apply to a UHR PPDU.

A UHR STA shall follow the rules defined in 35.6 (A-MPDU operation in an EHT PPDU) with the following changes:

— Replacing an EHT STA by a UHR STA.
— Replacing an EHT PPDU by a UHR PPDU.

Copyright © 2025 IEEE. All rights reserved.
This is an unapproved IEEE Standards Draft, subject to change.

37.10 UHR BSS operation

37.10.1 Basic UHR BSS operation

A UHR STA has dot11UHROptionImplemented equal to true.

NOTE—A UHR AP sets dot11MultiLinkActivated to true and is affiliated with an AP MLD. A non-AP UHR STA with dot11MultiLinkActivated equal to true is affiliated with a non-AP MLD. A non-AP UHR STA with dot11MultiLinkActivated equal to false is not affiliated with any non-AP MLD.

A STA operating in the 2.4 GHz band that sets dot11UHROptionImplemented to true shall set dot11EHTOptionImplemented, dot11HEOptionImplemented, dot11HighThroughputOptionImplemented to true. A STA operating in the 5 GHz or 6 GHz band that sets dot11UHROptionImplemented to true shall set dot11EHTOptionImplemented, dot11HEOptionImplemented, dot11VHTOptionImplemented and dot11HighThroughputOptionImplemented to true.

A UHR STA operating in the 6 GHz band is a VHT STA except that it is exempt from following VHT and HT functionalities and/or requirements that are not applicable or that are superseded by equivalent HE functionalities and/or requirements (see Clause 26 (High Efficiency (HE) MAC specification) and Clause 27 (High Efficiency (HE) PHY specification)), or equivalent EHT functionalities and/or requirements (see Clause 35 (Extremely high throughput (EHT) MAC specification) and Clause 36 (Extremely high throughput (EHT) PHY specification), or equivalent UHR functionalities and/or requirements (see Clause 37 (Ultra-high reliability (UHR) MAC specification) and Clause 38 (Ultra-high reliability (UHR) PHY specification), and that it shall use the HE format, EHT format or UHR format instead of the VHT, HT_GF, or HT_MF format for PPDUs transmitted in the 6 GHz band.

If a UHR BSS operating channel width is announced in the EHT Operation element, then a UHR AP shall announce the BSS operating channel width(s) to non-EHT non-AP STAs with the restrictions as described in 35.15.1 (Basic EHT BSS operation).

(#8462)A UHR AP shall not assign AID values of 56 to 63 to any non-AP STA or any non-AP MLD.

37.10.2 Enhanced long range (ELR) operation

A UHR AP operating in the 5 GHz band or 6 GHz band shall set dot11EnhancedLongRangeTxActivated to false. A UHR non-AP STA may set dot11EnhancedLongRangeTxActivated to true.

A UHR STA may transmit an ELR PPDU to a peer UHR STA if all of the following conditions are true:

— dot11EnhancedLongRangeTxActivated is equal to true,
— the ELR Tx Support field transmitted in its UHR Capabilities element is equal to 1,
— the STA is an AP and is operating in the 2.4 GHz band or the STA is a non-AP STA,
— the peer UHR STA has set the ELR Rx Support field to 1 in its UHR Capabilities element,
— the peer UHR STA has enabled the reception of ELR PPDUs, either by following the procedure defined in 37.32 (Enhanced BSS parameter critical update procedure(#12610)) if the peer STA is an AP or by following the procedure defined in 37.31 (Procedure for operating mode and parameter updates) if the peer STA is a non-AP STA.

Otherwise, the UHR STA shall not transmit an ELR PPDU to the peer STA.

A UHR STA that intends to transmit an ELR PPDU shall ensure that:

— The TXVECTOR parameters STA_ID, UPLINK_FLAG, TXOP_DURATION, and BSS_COLOR are set as defined in 37.11.1 (Setting TXVECTOR parameters for a UHR PPDU),

Copyright © 2025 IEEE. All rights reserved.
This is an unapproved IEEE Standards Draft, subject to change.

— The TXVECTOR parameter MCS indicates either UHR-MCS 0 or UHR-MCS 1 unless the ELR PPDU carries a control response frame in which case the TXVECTOR parameter MCS indicates UHR-MCS 0,
— The PPDU is transmitted in the primary 20 MHz of the BSS,
— The frame(s) carried in the ELR PPDU are individually addressed to the peer STA.

NOTE 1—The value 0 for the TXVECTOR parameter BSS_COLOR is disallowed for ELR PPDUs (i.e., only the active BSS color can be used).

A UHR STA that responds to an ELR PPDU shall use CBW20 for the PPDU that carries the response frame.

A UHR STA shall send Control frames following the rules defined in 10.6.6 (Rate selection for Control frames) with the following exceptions:

— A Control frame sent by a UHR STA in response to an ELR PPDU that does not contain a triggering frame should be carried in an ELR PPDU unless the most recent non-TB PPDU sent by the UHR STA to the recipient of the Control frame, after association, was not an ELR PPDU. In this case the Control frame should be carried in a non-HT PPDU.
— A Control frame sent by a UHR STA in response to a UHR PPDU or a non-HT PPDU that does not contain a triggering frame should be carried in a non-HT PPDU, unless the most recent non-TB PPDU sent by the UHR STA to the recipient of the Control frame, after association, was an ELR PPDU. In this case the Control frame should be carried in an ELR PPDU, unless other conditions, which are out of scope of the standard, apply.
  - The channel bandwidth of the PPDU that elicited the response frame may be greater than 20 MHz only if the UHR STA that sent the Control frame is a non-AP STA
— A Control frame may be carried in an ELR PPDU if the Control frame is not solicited by another frame and is not a Trigger frame.

NOTE 2—A change in the format of the PPDU containing the control response frame (between non-HT and ELR PPDU) occurs in subsequent TXOPs. A STA, which solicits a control response frame from a responding STA, is expected to account for the PPDU format of the control response frame to calculate the expected duration of the TXOP. The responding STA determines that the most recent PPDU sent to the soliciting STA is received if it receives an immediate acknowledgment by the soliciting STA in response to the PPDU.

37.11 Enhanced Buffer status report operation

A UHR STA shall set the Enhanced BSR Support field in the UHR MAC Capabilities Information field of the UHR Capabilities element transmitted by the STA to 1 if dot11UHREBSRImplemented is true; otherwise, the UHR STA shall set the Enhanced BSR Support field to 0.

A UHR STA with dot11UHREBSRImplemented equal to true shall follow the rules defined in 26.5.5 (Buffer status report operation) and the rules defined below.

NOTE—A UHR STA with dot11UHREBSRImplemented equal to false follows the rules defined in 26.5.5 (Buffer status report operation).(#11727)

A non-AP UHR STA may provide buffer status reports in the EBSR Control field (see 9.2.4.7.13 (EBSR Control)(#10364) to assist its associated AP in allocating UL MU resources (see 26.5.5 Buffer status report operation). When the queue size for a given TID is greater than the largest value that can be indicated in the Queue Size field in the QoS Control field, the non-AP UHR STA may indicate the queue size in the EBSR Control field of a frame that is sent to the AP.

Copyright © 2025 IEEE. All rights reserved.
This is an unapproved IEEE Standards Draft, subject to change.

A non-AP UHR STA shall not transmit a frame with an EBSR Control field to its associated AP unless the non-AP UHR STA has received from the AP a UHR Capabilities element with the Enhanced BSR Support field in the UHR MAC Capabilities Information field equal to 1.

A non-AP UHR STA may report its buffer status in the EBSR Control field either in a frame (see 10.8 (HT Control field operation) that is transmitted to its associated AP (unsolicited EBSR) or in response to a BSRP Trigger frame addressed to the non-AP UHR STA with one or more QoS Null frames carrying the EBSR Control field (solicited EBSR) as defined in 10.8 (HT Control field operation), 26.5.5 (Buffer status report operation) and as defined below.

— For the TID indicated in the TID field of the EBSR Control field, the non-AP UHR STA shall indicate the queue size in the Queue Size Indicator field of the EBSR Control field; if the non-AP STA intends to indicate a queue size greater than 35 570 688 octets for that TID, then the non-AP STA shall set the value of the Queue Size Indicator field to 255.

— If there is a Queue Size subfield in a QoS Control field transmitted in the same MPDU or A-MPDU as an EBSR Control field, and the TID indicated in the TID subfield of the QoS Control field is the same as the TID indicated in the TID field of the EBSR Control field, the value of the Queue Size subfield of the QoS Control subfield with that TID shall be set to 254.

NOTE—A non-AP UHR STA can report the buffer status of one TID in the QoS Control subfield and of another TID in the EBSR Control field of the same MPDU or A-MPDU.

37.12 Nominal packet padding values selection rules

For a UHR MU PPDU, the PE requirements of UEQM with the constellation order x of the first spatial stream is equal to the PE requirements of EQM with the constellation order x.

37.13 Rules related to the PHY interface of a UHR STA

37.13.1 Setting TXVECTOR parameters for a UHR PPDU

37.13.1.1 STA_ID

A UHR STA shall set the TXVECTOR parameter STA_ID following the rules defined in 35.11.1.1 (STA_ID) with the following additions:

— The rules that apply to an EHT MU PPDU shall also apply to a UHR MU PPDU and a UHR ELR PPDU.

37.13.1.2 POWER_BOOST_FACTOR

A UHR STA shall set the the TXVECTOR parameter POWER_BOOST_FACTOR following the rules defined in 35.11.1.2 (POWER_BOOST_FACTOR) with the following additions:

— The rules that apply to an OFDMA EHT MU PPDU shall also apply to an OFDMA UHR MU PPDU.

— The rules that apply to a non-OFDMA EHT MU PPDU shall also apply to a non-OFDMA UHR MU PPDU.

NOTE—The POWER_BOOST_FACTOR is not present in the TXVECTOR in a UHR TB PPDU or a UHR ELR PPDU.

Copyright © 2025 IEEE. All rights reserved.
This is an unapproved IEEE Standards Draft, subject to change.

37.13.1.3 UPLINK_FLAG

A UHR STA shall set the TXVECTOR parameter UPLINK_FLAG following the rules defined in 26.11.2 (UPLINK_FLAG) and 35.11.1.3 (UPLINK_FLAG) with the following additions:

— The rules that apply to an EHT MU PPDU shall also apply to a UHR MU PPDU.

— The rules that apply to an HE ER PPDU shall also apply to a UHR ELR PPDU.

37.13.1.4 BSS_COLOR

A UHR STA shall set the TXVECTOR parameter BSS_COLOR following the rules defined in 35.11.1.4 (BSS_COLOR) with the following additions:

— The rules that apply to an EHT MU PPDU shall also apply to a UHR MU PPDU.

A UHR STA that transmits a UHR ELR PPDU shall set the TXVECTOR parameter BSS_COLOR to the BSS Color subfield of the most recently received or transmitted HE Operation element exchanged within the BSS that the UHR STA is a member of.

NOTE—The value 0 for the TXVECTOR parameter BSS_COLOR is disallowed for ELR PPDUs (i.e., only the active BSS color can be used). The BSS Color subfield in the HE Operation element is never 0.

37.13.1.5 TXOP_DURATION

A UHR STA shall set the TXVECTOR parameter TXOP_DURATION following the rules defined in 26.11.5 (TXOP_DURATION) and 35.11.1.5 (TXOP_DURATION) with the following additions:

— The rules that apply to an EHT MU PPDU shall also apply to a UHR MU PPDU.

— The rules that apply to an HE ER PPDU shall also apply to a UHR ELR PPDU.

37.14 UHR Co-BF sounding operation

37.14.1 General

Transmit beamforming, DL MU-MIMO and Co-BF require knowledge of the channel state to compute a steering matrix that is applied to the transmit signal to optimize reception at one or more receivers. UHR STAs use the EHT sounding protocol as defined in 35.7 (EHT sounding operation) to determine the channel state information for beamformed transmissions other than Co-BF.

UHR STAs use the UHR sounding protocol which is the same as the EHT TB sounding protocol defined in 35.7 (EHT sounding operation) except as specified in this subclause to determine the channel state information for Co-BF transmission. For Co-BF, the UHR sounding protocol provides an explicit feedback mechanism, defined as UHR Co-BF sounding sequences that include UHR Co-BF sequential NDP sounding sequence and UHR Co-BF joint NDP sounding sequence. In the UHR Co-BF sounding sequences, the UHR Co-BF beamformee measures the channel using a training signal as defined in 38.3.23 (EHT sounding NDP for UHR Co-BF sounding sequence) transmitted by one or two UHR beamformers and sends back a transformed estimate of the channel state (see 37.14.3 (Rules for UHR Co-BF sounding protocol sequences)). The UHR beamformer uses this estimate to derive the steering matrix.

A UHR Co-BF beamformee shall return an estimate of the channel state via an EHT compressed beamforming/CQI report (see 35.7.1 (General)) using MU feedback type. A UHR Co-BF beamformee shall segment the EHT Compressed Beamforming/CQI Report frame if necessary (see 37.14.4 (Rules for generating segmented feedback for Co-BF))

A UHR Co-BF beamformer shall support a maximum MPDU length for the EHT Compressed Beamforming/CQI Report frame that is the minimum of 11 454 octets and the maximum length of the EHT

Copyright © 2025 IEEE. All rights reserved.
This is an unapproved IEEE Standards Draft, subject to change.

Compressed Beamforming/CQI Report frame that the UHR Co-BF beamformer intends to solicit from its UHR Co-BF beamformee(s).

37.14.2 UHR Co-BF sounding protocol

The term *UHR Co-BF beamformer* refers to a UHR AP that operates as an MU beamformer. The term *UHR Co-BF beamformee* refers to a UHR non-AP STA that operates as an MU beamformee. A UHR Co-BF beamformee is only required to support full bandwidth MU feedback.

The type of feedback solicited by a UHR Co-BF beamformer from a UHR Co-BF beamformee is indicated in the Feedback Type And Ng and Codebook Size fields in the STA Info field identifying the UHR Co-BF beamformee in the UHR NDP Announcement frame as defined in (#Ed)Table 9-50 (Feedback Type And Ng field and Codebook Size field encoding for HE TB sounding).

The bandwidth of the feedback solicited by a UHR Co-BF beamformer from a UHR Co-BF beamformee depends on the Partial BW Info field in the STA Info field identifying the UHR Co-BF beamformee in the UHR NDP Announcement frame, the bandwidth of the PPDU carrying the UHR NDP Announcement frame, and the operating bandwidth of the UHR Co-BF beamformee. The bandwidth of the PPDU carrying the UHR NDP Announcement frame and the subsequent EHT sounding NDP shall be the same.

Full bandwidth MU feedback refers to the feedback mode where the feedback RU or MRU size indicated in the Partial BW Info field of the UHR NDP Announcement frame spans all the available bandwidth within a UHR Co-BF beamformee's operating bandwidth.

— If the UHR Co-BF beamformee's operating bandwidth is larger than or equal to the bandwidth of the EHT sounding NDP, the available bandwidth is the entire PPDU bandwidth of the EHT sounding NDP when preamble puncturing is not applied on the PPDU and is the entire occupied PPDU bandwidth of the EHT sounding NDP when preamble puncturing is applied on the PPDU.

A UHR Co-BF beamformer shall set the Partial BW Info field in a UHR NDP Announcement frame to a value that is listed in (#Ed)Table 9-52 (Settings for BW, Partial Bandwidth Info field in the EHT NDP Announcement frame).

A UHR NDP Announcement frame shall not request feedback on any RU that is signalled as punctured in the U-SIG field of the EHT sounding NDP that follows the UHR NDP Announcement frame.

A UHR Co-BF beamformee indicates the maximum supported data rate used in the EHT TB PPDU carrying the EHT compressed beamforming/CQI report in the TB Sounding Feedback Rate Limit field in the UHR PHY Capabilities Infor-mation field in the UHR Capabilities element it transmits.

A UHR Co-BF beamformer shall not solicit an EHT TB PPDU with a BFRP Trigger frame that indicates a data rate greater than the data rate indicated by the UHR Co-BF beamformee in the TB Sounding Feedback Rate Limit field. The data rate indicated in the BFRP Trigger frame is computed based on the RU Allocation field, PS160 field, UL EHT-MCS field, and SS Allocation field in the EHT variant User Info field of the BFRP Trigger frame. The data rate is computed based on 1.6 µs GI.

37.14.3 Rules for UHR Co-BF sounding protocol sequences

A UHR Co-BF beamformer that initiates a UHR Co-BF sounding sequence, using a Co-BF Sounding Invite frame is the initiating AP. A UHR Co-BF beamformer that responds to the Co-BF Sounding Invite frame from the initiating AP is the responding AP.

In order to perform a UHR Co-BF sounding, an initiating AP shall transmit a UHR NDP Announcement frame with three or more STA Info fields and the RA field set to the broadcast address. STA Info fields shall

Copyright © 2025 IEEE. All rights reserved.
This is an unapproved IEEE Standards Draft, subject to change.

only be identified with the AP ID and the AID values corresponding to the responding AP and the non-AP UHR STAs associated with the initiating AP.

The UHR NDP Announcement frame shall be followed after a SIFS by an EHT sounding NDP transmitted from the responding AP in a UHR Co-BF sequential NDP sounding sequence, or EHT sounding NDPs simultaneously transmitted from the initiating AP and the responding AP in a UHR Co-BF joint NDP sounding sequence. The EHT sounding NDP(s) shall be followed after a SIFS by a BFRP Trigger frame from the initiating AP. Subsequent BFRP Trigger frames, if any, in the UHR Co-BF sounding sequence shall be transmitted a SIFS after the EHT TB PPDU transmitted in response to the previous BFRP Trigger frame. Each UHR Co-BF beamformee that is addressed by a BFRP Trigger frame shall respond after a SIFS with an EHT TB PPDU. All BFRP Trigger frames used within the UHR Co-BF sounding sequence shall be EHT variant BFRP Trigger frames.(#9205)

A UHR Co-BF sequential NDP sounding sequence comprises an EHT TB sounding sequence (see 35.7.3 (Rules for generating segmented feedback)) and a cross-BSS UHR Co-BF sounding sequence. A UHR Co-BF beamformer shall support a UHR Co-BF sequential NDP sounding sequence.

A UHR Co-BF sequential NDP sounding sequence initiated by one AP comprises an EHT TB sounding sequence to collect channel state information from its associated non-AP STA(s), and a cross-BSS UHR Co-BF sounding sequence for the responding AP to collect channel state information from the same STA(s). The cross-BSS UHR Co-BF sounding sequence uses the same sounding sequence as EHT TB sounding except that the initiating AP transmits the UHR NDP Announcement frame to solicit the EHT sounding NDP from the responding AP. The UHR NDP Announcement frame shall only be sent to the responding AP and the non-AP UHR STA(s) associated with the initiating AP. An example of a UHR Co-BF sequential NDP sounding sequence initiated by AP1 is shown in Figure 37-1 (UHR Co-BF sequential NDP sounding sequence initiated by AP1).

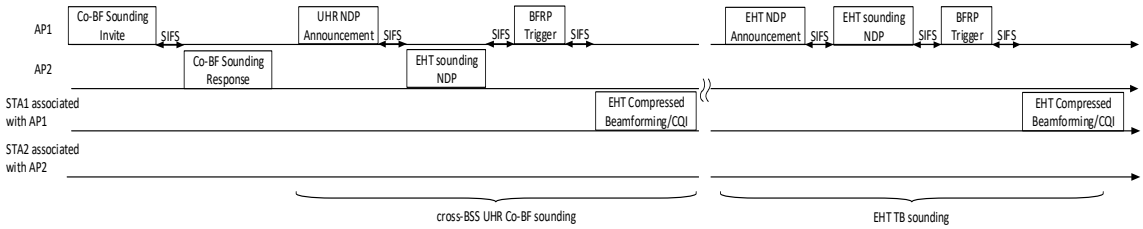

Figure 37-1—UHR Co-BF sequential NDP sounding sequence initiated by AP1

NOTE 1—The EHT TB sounding sequence and Cross-BSS UHR Co-BF sounding sequence in a UHR Co-BF sequential NDP sounding sequence are allowed to be in different TXOPs or in the same TXOP.

If EHT TB sounding sequence and cross-BSS UHR Co-BF sounding sequence in a UHR Co-BF sequential NDP sounding sequence are in different TXOPs, the ordering of the EHT TB sounding sequence and the cross-BSS UHR Co-BF sounding sequence is implementation dependent. A beamformer may skip the EHT TB sounding sequence if it already has the in-BSS channel state information needed from all its associated STA(s).

If EHT TB sounding sequence and cross-BSS UHR Co-BF sounding sequence in a UHR Co-BF sequential NDP sounding sequence are in the same TXOP, the cross-BSS UHR Co-BF sounding sequence shall be done first. The subsequent EHT NDP Announcement in the EHT TB sounding sequence shall be transmitted SIFS after the EHT TB PPDU.

Before the cross-BSS UHR Co-BF sounding sequence, a Co-BF Sounding Invite frame and a Co-BF Sounding Response frame shall be exchanged between the initiating AP and responding AP. The responding AP may indicate it accepts or declines to par-ticipate in the cross-BSS UHR Co-BF sounding sequence in the Co-BF Sounding Response frame. The information of the min-imum sounding NSS capability of the participating non-AP STAs are exchanged by the Co-BF Sounding Invite frame and the Co-BF Sounding Response frame.

Copyright © 2025 IEEE. All rights reserved.
This is an unapproved IEEE Standards Draft, subject to change.

In UHR Co-BF sequential NDP sounding sequence, to collect all the required channel state to compute a steering matrix for Co-BF transmission, both UHR Co-BF beamfomers shall initiate the UHR Co-BF sequential NDP sounding sequence to solicit the channel state from their own associated non-AP STA(s). An example of a UHR Co-BF sequential NDP sounding sequence initiated by AP2 is shown in Figure 37-2 (UHR Co-BF sequential NDP sounding sequence initiated by AP2).

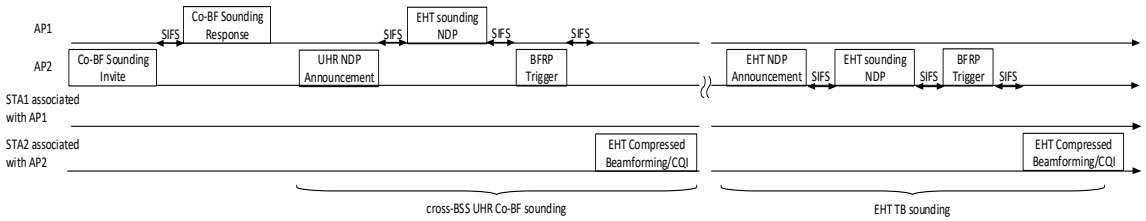

Figure 37-2—UHR Co-BF sequential NDP sounding sequence initiated by AP2

NOTE 2—The EHT TB sounding sequence and cross-BSS UHR Co-BF sounding sequence in a UHR Co-BF sequential NDP sounding sequence are allowed to be in different TXOPs or in the same TXOP.

NOTE 3—The UHR Co-BF sequential NDP sounding sequences initiated by a pair of UHR Co-BF beamformers are allowed to be done in the same TXOP or different TXOPs.

When the UHR Co-BF sequential NDP sounding sequences initiated by a pair of UHR Co-BF beamformers are both done in the same TXOP, then each UHR Co-BF beamformer only performs one UHR Co-BF sequential NDP sounding sequence. In the case of same TXOP, the TXOP duration is not allowed to exceed 8 ms.

A UHR Co-BF beamformer may support UHR Co-BF joint NDP sounding sequence.

The UHR Co-BF joint NDP sounding sequence use the same sounding sequence as EHT TB sounding except that the initiating AP transmits the UHR NDP Announcement frame followed after a SIFS by EHT sounding NDPs transmitted simultaneously by both the initiating AP and responding AP. The UHR NDP Announcement frame shall only be sent to the responding AP and the non-AP UHR STAs associated with the initiating AP. An example of a UHR Co-BF joint NDP sounding sequence initiated by AP1 is shown in Figure 37-3 (UHR Co-BF joint NDP sounding sequence initiated by AP1).

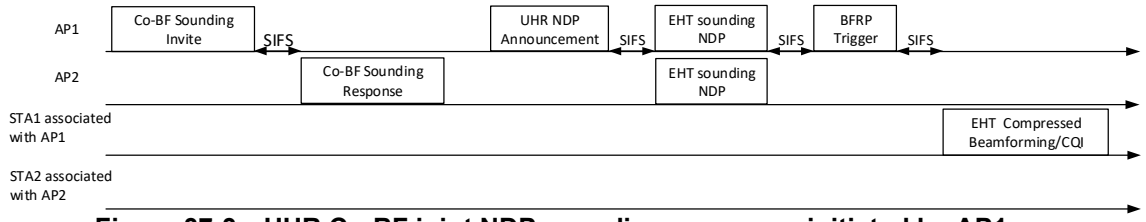

Figure 37-3—UHR Co-BF joint NDP sounding sequence initiated by AP1

Before the UHR Co-BF joint NDP sounding sequence, a Co-BF Sounding Invite frame and a Co-BF Sounding Response frame shall be exchanged between the initiating AP and responding AP. The responding AP may indicate it accepts or declines to participate the UHR Co-BF joint NDP sounding sequence in the Co-BF Sounding Response frame. The information of the minimum sounding NSS capability of the participating non-AP STAs are exchanged by the Co-BF Sounding Invite frame and the Co-BF Sounding Response frame.

In UHR Co-BF joint NDP sounding sequence, to collect all the required channel state to compute a steering matrix for Co-BF transmission, both UHR Co-BF beamformers shall initiate the UHR TB joint NDP

Copyright © 2025 IEEE. All rights reserved.
This is an unapproved IEEE Standards Draft, subject to change.

sounding. An example of a UHR Co-BF joint NDP sounding sequence initiated by AP2 is shown in Figure 37-4 (UHR Co-BF joint NDP sounding sequence initiated by AP2).

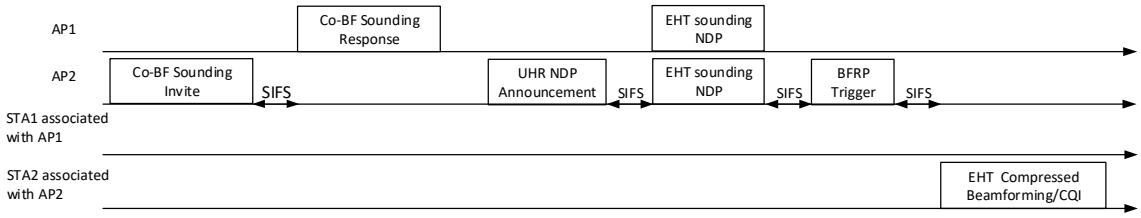

Figure 37-4—UHR Co-BF joint NDP sounding sequence initiated by AP2

NOTE 4—The UHR Co-BF joint NDP sounding sequences initiated by a pair of UHR Co-BF beamformers are allowed to be done in the same TXOP or different TXOPs.

In either the cross-BSS UHR Co-BF sounding sequence or the UHR Co-BF joint NDP sounding sequence, the responding AP uses the information carried in the BFRP Trigger frame to receive the subsequent EHT TB PPDU transmitted by the non-AP STA(s) associated with the initiating AP

When the UHR Co-BF joint NDP sounding sequences initiated by a pair of UHR Co-BF beamformers are both done in the same TXOP, then each UHR Co-BF beamformer only performs one UHR Co-BF joint NDP sounding sequence. In the case of same TXOP, the TXOP duration is not allowed to exceed 8 ms.

A UHR Co-BF beamformer that sends a BFRP Trigger frame shall set the Feedback Segment Retransmission Bitmap fields of the BFRP Trigger frame to all 1s.

A UHR Co-BF beamformer initiates a UHR Co-BF sounding sequence if the feedback is computed based on parameters (see 9.4.2.354.3 (UHR PHY Capabilities Information field)) supported by the UHR Co-BF beamformee(s) associated with the initiating AP. A UHR Co-BF beamformer shall not initiate a UHR Co-BF sounding sequence if the feedback would be computed based on parameters not supported by the UHR Co-BF beamformee(s) associated with the initiating AP (see 37.14.2 (UHR Co-BF sounding protocol)).

A UHR Co-BF beamformer that transmits a UHR NDP Announcement frame shall set the AID11 field of the first STA Info field to 2047 and the AID11 field of the second STA Info field to the responding AP identifier (see 9.3.1.19.6 (UHR NDP Announcement frame format)).

In a UHR Co-BF sounding sequence, the Starting Spatial Streams field in the UHR NDP Announcement shall be set to 0 in a UHR Co-BF sequential NDP sounding sequence and set to 1 in a UHR Co-BF joint NDP sounding sequence.

A UHR Co-BF beamformer that transmits a UHR NDP Announcement frame to one or more UHR Co-BF beamformees shall set the AID11 field to the 11 LSBs of the AID of each UHR Co-BF beamformee starting from the third STA Info field. A UHR NDP Announcement frame shall not include multiple STA Info fields that have the same value in the AID11 field.

In a UHR Co-BF sounding sequence, a STA Info field in the UHR NDP Announcement frame that solicits MU feedback indicates the subcarrier grouping, *Ng*, codebook size and the number of columns, *Nc*, to be used by the UHR Co-BF beamformee identified by the STA Info field for the generation of the MU feedback.

A UHR Co-BF beamformer that transmits a UHR NDP Announcement frame shall set the Partial BW Info field in a STA Info field to indicate the feedback subcarrier indices of the solicited EHT compressed beamforming/CQI report (see 9.3.1.19 (NDP Announcement frame format)). A UHR Co-BF beamformer shall set the Partial BW Info field such that the subcarrier indices *scidx(i)*, *i*=0, 1, ..., *Ns*-1 (see 9.4.1.73

Copyright © 2025 IEEE. All rights reserved.
This is an unapproved IEEE Standards Draft, subject to change.

(EHT Compressed Beamforming Report field)), fall within the operating channel width of the corresponding UHR Co-BF beamformee.

The UHR Co-BF beamformer shall set the TXVECTOR parameter CH_BANDWIDTH or CH_BANDWIDTH_IN_NON_HT, the Partial BW Info field of the UHR NDP Announcement frame, depending on the operating channel width of the beamformee, the operating channel width of the beamformer, and the feedback RU or MRU size, as defined in (#Ed)Table 9-52 (Settings for BW, Partial Bandwidth Info field in the EHT NDP Announcement frame).

A UHR Co-BF beamformee that receives a UHR NDP Announcement frame as part of a UHR Co-BF sounding sequence with a STA Info field identifying it soliciting MU feedback shall generate a UHR compressed beamforming/CQI report using the feedback type, *Ng*, codebook size, and *Nc* indicated in the STA Info field.

If the UHR Co-BF beamformee receives a BFRP Trigger frame with a matching User Info field, the UHR Co-BF beamformee transmits an EHT TB PPDU containing the EHT compressed beamforming/CQI report following the rules defined in 35.5.2.3 (Non-AP STA behavior for UL MU operation).

A UHR Co-BF beamformee that transmits an EHT Compressed Beamforming/CQI frame sets the Partial BW Info field of the EHT MIMO Control field to indicate the range of subcarriers for which compressed beamforming/CQI information is provided. The Partial BW Info field shall be set to the value of the Partial BW Info field of the NDP Announcement frame for the UHR Co-BF beamformee.

An AP that sends a BFRP Trigger frame shall allocate sufficient resources for the EHT TB PPDU response for each UHR Co-BF beamformee to include all the solicited feedback, including feedback that is segmented and including an HT Control field in each frame.

A UHR Co-BF beamformer that sends a BFRP Trigger frame to solicit the EHT TB PPDU from more than one UHR Co-BF beamformee in a cross-BSS UHR Co-BF sounding sequence or a UHR Co-BF joint NDP sounding sequence shall apply non-MU-MIMO OFDMA.

37.14.4 Rules for generating segmented feedback for Co-BF

A UHR Co-BF beamformee receiving a BFRP Trigger frame with a matching STA Info field, transmits a EHT TB PPDU containing the EHT compressed beamforming/CQI report following the segmentation rules defined in 35.7.4 (Rules for generating segmented feedback).

A UHR Co-BF beamformer that sends a BFRP Trigger frame to retrieve an EHT compressed beamforming/CQI report from a UHR Co-BF beamformee shall solicit all possible EHT Sounding Feedback Segment fields (feedback segments) by setting all of the bits in the Feedback Segment Retransmission Bitmap field to 1 in the User Info field identifying the UHR Co-BF beamformee.

A UHR Co-BF beamformer that fails to receive some or all of the feedback segments of the EHT compressed beam-forming/CQI report from the UHR Co-BF beamformee shall not use a BFRP Trigger frame to request retransmission of the feedback segments.

37.14.5 Sounding NDP transmission for UHR Co-BF sounding sequence

For UHR Co-BF sounding uses EHT sounding NDP, the TXVECTOR parameters for an EHT sounding NDP shall be set as follows:

— FORMAT is set to EHT_MU.
— APEP_LENGTH is set to 0.
— EHT_LTF_TYPE is set to 2×EHT-LTF.

Copyright © 2025 IEEE. All rights reserved.
This is an unapproved IEEE Standards Draft, subject to change.

— GI_TYPE is set to either 0.8 µs GI or 1.6 µs GI.
— Number Of EHT-LTF Symbols is set to 4 or 8.
— NSS is set to 4 or 8 spatial streams.
— CH_BANDWIDTH is set to the value indicated in the special STA info field (see 9.3.1.19.6 (UHR NDP Announcement frame format)).
— SPATIAL_REUSE is set to PSR_AND_NON_SRG_OBSS_PD_PROHIBITED (see 35.11.2 (SPATIAL_REUSE)).
— BSS_COLOR is set to the value indicated in the special STA info field (see 9.3.1.19.6 (UHR NDP Announcement frame format)).
— TXOP_DURATION set to either 127 or a value defined in Equation (35-3).

The intended recipient(s) of an EHT sounding NDP is (are) the STA(s) addressed by the STA Info field(s) in the immediately preceding UHR NDP Announcement frame.

37.15 Multi-AP coordination (MAPC) framework

37.15.1 Common procedures for all multi-AP coordination schemes

37.15.1.1 General

The MAPC framework includes a set of schemes (such as Co-BF, Co-SR, Co-TDMA, Co-RTWT, and Co-CR) and procedures in which APs operating their BSSs on the same primary 20 MHz channel coordinate to reduce interference levels and to improve network performance such as medium utilization efficiency, communication reliability, and latency.

An AP may use a MAPC scheme with another AP if it has established an agreement for that MAPC scheme by following the procedures defined in 37.15.1 (Common procedures for all multi-AP coordination schemes) or via other means (#7874)that are out of the scope of this standard.

This subclause details the common procedures applicable for all the coordination schemes. The MAPC discovery procedure is defined in 37.15.1.2 (MAPC discovery). The MAPC agreement negotiation procedure is defined in 37.15.1.3 (MAPC agreement negotiation).

NOTE—For example, two APs that belong to the same ESS can enable the use of MAPC schemes via other means than the MAPC discovery and MAPC agreement negotiation procedures defined in this subclause.

All other procedures that are specific per coordination scheme are detailed in 37.15.2 (Procedures for specific multi-AP coordination schemes).

37.15.1.2 MAPC discovery

This subclause defines MAPC discovery procedures for APs to advertise and discover MAPC capabilities and parameters of other APs.

An AP may advertise its MAPC capabilities, common MAPC parameters, and parameters specific to MAPC schemes by transmitting a MAPC Discovery Request frame (see 9.6.7.65 (MAPC Discovery Request frame format(#Ed))) to the broadcast address, or as an individually addressed frame to another AP.

If an AP receives a soliciting MAPC Discovery Request frame from a transmitting AP, the AP shall respond by sending a MAPC Discovery Response frame to the broadcast address or as an individually addressed Management frame to the transmitting AP. The value of the Dialog Token field of the MAPC Discovery

Copyright © 2025 IEEE. All rights reserved.
This is an unapproved IEEE Standards Draft, subject to change.

Response frame (see Figure 9-aa71 (MAPC Discovery Response frame format)) by the AP shall be set equal to the value of the Dialog Token field of the soliciting MAPC Discovery Request frame.

An AP that transmits a MAPC Discovery Request frame or a MAPC Discovery Response frame may include a Per-Scheme Profile subelement in the reported MAPC element for each MAPC scheme for which it signals a capability (see Figure 9-aa13 (MAPC Capabilities field format)). The AP shall not include the MAPC Scheme Request Set field in the reported Per-Scheme Profile subelements.

If an AP that transmits a MAPC Discovery Request frame or a MAPC Discovery Response frame to a peer AP sets the MAPC Security Supported field carried in the MAPC element to 1, the AP shall include an(#7676, 8218) RSNE field and RSNXE field in the Security Profile subelement of(#5559, 4141, 7636, 7676, 8218, 5559, 4141, 7636) the MAPC element.

37.15.1.3 MAPC agreement negotiation

37.15.1.3.1 General

This subclause defines procedures for MAPC agreement negotiation. An AP shall follow the rules defined in this subclause to establish, update or tear down agreements for MAPC through negotiation, in addition to the specific rules for multi-AP coordination schemes defined in 37.15.2 (Procedures for specific multi-AP coordination schemes).

A MAPC requesting AP is an AP that initiates a MAPC negotiation for one or more MAPC schemes with another AP.

A MAPC requesting AP shall not initiate a MAPC negotiation for a specific MAPC scheme with a peer AP if the peer AP has set the corresponding field for the support of that MAPC scheme in the MAPC Common Info field (see Figure 9-aa13 (MAPC Capabilities field format)) reported in the MAPC Discovery Request frame, MAPC Discovery Response frame, or MAPC Negotiation Request frame most recently received by the MAPC requesting AP to 0.

A MAPC responding AP is an AP that responds to a MAPC requesting AP.

A MAPC requesting AP may initiate a MAPC negotiation for one or more MAPC schemes by sending an individually addressed MAPC Negotiation Request frame (see 9.6.7.68 (MAPC Negotiation Request frame format)) to another AP. The MAPC Negotiation Request frame shall include a MAPC element including at least one Per-Scheme Profile subelement in the MAPC Schemes Info field. Additionally, the MAPC requesting AP shall not include the Per-Scheme Profile subelement for a specific MAPC scheme in the MAPC element (see Table 9-bb8 (MAPC Scheme Type field values)) if it has not indicated support for that MAPC scheme in the MAPC Capabilities field carried in the MAPC element (see Figure 9-aa13 (MAPC Capabilities field format)). If a Per-Scheme Profile subelement is included in the MAPC element, it shall carry the MAPC Scheme Request Set field including at least one MAPC Scheme Request field.

NOTE—Each Per-Scheme Profile subelement of the MAPC Schemes Info field in a MAPC Negotiation Request frame carries request(s) for a specific MAPC scheme (see 9.4.2.355.4 (MAPC Schemes Info field)).

A MAPC responding AP that receives an individually addressed MAPC Negotiation Request frame from a MAPC requesting AP shall respond by sending an individually addressed MAPC Negotiation Response frame to the MAPC requesting AP. The value of the Dialog Token field of the MAPC Negotiation Response frame (see Figure 9-aa74 (MAPC Negotiation Response frame format)) shall be set equal to the value of the Dialog Token field of the MAPC Negotiation Request frame (see Figure 9-aa73 (MAPC Negotiation Request frame format)). The Status Code field shall be set to SUCCESS if the MAPC responding AP accepts at least one of the requests carried in the received MAPC Negotiation Request frame. Otherwise, the MAPC responding AP shall set the corresponding Status field to indicate an appropriate rejection status

Copyright © 2025 IEEE. All rights reserved.
This is an unapproved IEEE Standards Draft, subject to change.

code as per (#Ed)Table 9-92 (Status codes). The MAPC Negotiation Response frame shall include a MAPC element including one Per-Scheme Profile subelement in the MAPC Schemes Info field for each Per-Scheme Profile subelement included by the MAPC requesting AP in the MAPC Negotiation Request frame. In the MAPC Negotiation Response frame, each Per-Scheme Profile subelement shall include a MAPC Scheme Request field with MAPC Operation Type field set to 3, 4 or 5 (see Table 9-bb9 (MAPC Operation Type field values)). If the MAPC Operation Type field is set to 3 or 4, the MAPC Request Parameter Set field shall not be included. To accept a request, the MAPC Operation Type field shall be set to 3. To reject a request, the MAPC Operation Type field shall be set to 4. To reject a request and to indicate that the MAPC responding AP may accept a subsequent request with parameter values as those included by the MAPC responding AP in the MAPC Request Parameter Set, the MAPC Operation Type field shall be set to 5. (#7957)The MAPC responding AP shall not set the MAPC Operation Type field, included in the MAPC Scheme Request field and carried in the MAPC Negotiation Response frame to 5, if a MAPC Request Parameter Set field is not present for that MAPC scheme.

After two APs establish a MAPC agreement, any of the two APs may initiate a MAPC negotiation as MAPC requesting AP to update or teardown the MAPC agreement.

37.15.1.3.2 MAPC agreement establishment

37.15.1.3.2.1 General

To request for a new agreement establishment, the MAPC requesting AP shall set the MAPC Operation Type field to 0 (see Table 9-bb9 (MAPC Operation Type field values)). If the MAPC Operation Type field is set to 0, the MAPC Request Parameter Set (#7886)field is included according to the rules defined in 37.15.2 (Procedures for specific multi-AP coordination schemes) for each specific MAPC scheme.

A MAPC requesting AP shall not request to establish a new agreement for a specific MAPC scheme if the MAPC responding AP has set to 0 the corresponding field (see Figure 9-aa14 (MAPC Parameters field format))(#5306) for enabling MAPC agreement establishment for that MAPC scheme in the MAPC Discovery Request frame, MAPC Discovery Response frame, or MAPC Negotiation Request frame most recently received by the MAPC requesting AP.

To accept, reject, or reject with a suggestion for alternative parameters for a MAPC agreement establishment, the MAPC responding AP shall follow the rules defined in 37.15.1.3.1 (General).

If the MAPC responding AP has accepted the request to establish a new MAPC agreement for a specific MAPC scheme, the MAPC requesting AP and the MAPC responding AP have established a MAPC agreement for that specific MAPC scheme.

NOTE—If, for example, a MAPC requesting AP transmits a MAPC Negotiation Request frame including a Co-BF profile and a Co-RTWT profile, where the Co-BF profile includes a MAPC Scheme Request field for a new agreement establishment request (MAPC Operation Type is set to 0) and the Co-RTWT profile includes three MAPC Scheme Request fields for three new agreement establishment requests, the MAPC responding AP responds with a MAPC Negotiation Response frame including a Co-BF profile and a Co-RTWT profile, where the Co-BF profile includes a MAPC Scheme Request field indicating the response to the agreement establishment request and the Co-RTWT profile includes three MAPC Scheme Request fields each indicating the response to the corresponding agreement establishment. In this example the MAPC requesting AP and the MAPC responding AP can establish up to one Co-BF agreement, and up to three Co-RTWT agreements (one for each R-TWT schedule).

A MAPC requesting AP and a MAPC responding AP may establish up to one MAPC agreement for each one of Co-BF, Co-SR, and Co-TDMA, and up to one MAPC agreement per R-TWT schedule for Co-RTWT.

(#4182)A MAPC requesting AP shall not set any MAPC Operation Type field, carried in the MAPC Scheme Request Set field of the Per-Scheme Profile subelement for a MAPC scheme included in the MAPC

Copyright © 2025 IEEE. All rights reserved.
This is an unapproved IEEE Standards Draft, subject to change.

Negotiation Request frame sent to a MAPC responding AP to indicate Agreement update or Agreement teardown (see Table 9-bb9 (MAPC Operation Type field values)), if there is no established agreement for the corresponding MAPC scheme between the MAPC requesting AP and the MAPC responding AP.

37.15.1.3.2.2 AP ID assignment

When an AP participates in a MAPC negotiation to establish new MAPC agreement(s) as defined in 37.15.1.3.2 (MAPC agreement establishment), the AP shall additionally follow the rules defined in this subclause to assign an AP ID to a peer AP with which the AP establishes a MAPC agreement.

The AP ID is as described in 9.4.1.8 (AID field).

The same AP ID value shall not be assigned by the AP or by its affiliated MLD to any other STA.

NOTE 1—The peer AP might obtain the same or different AP IDs from other APs after MAPC negotiations.

NOTE 2—The STA is an associated non-AP STA, an unassociated non-AP STA that has been allocated a (Ranging session Identifier) RSID, or any other coordinated AP, or a non-AP MLD that is associated with the AP MLD.

The same AP ID value shall not be assigned by any other AP within the same multiple BSSID set to any other STA.

The AP ID value shall not be assigned by any other AP MLD that has any affiliated AP within the same multiple BSSID set to any other non-AP MLD.

The AP ID value shall be greater than 2^n where n (#4739)is the value carried in the (#7894)MaxBSSID Indicator field of the Multiple BSSID element if the AP belongs to a multiple BSSID set.

To assign an AP ID to another AP, an AP shall include the AP ID field in a MAPC element (see 9.4.2.355 (MAPC element))).

A MAPC requesting AP shall (#10833)not include the AP ID field in the MAPC element carried in the transmitted MAPC Negotiation Request frame, (#10833)unless the MAPC requesting AP and the MAPC responding AP do not have an established MAPC agreement for any one of the Co-BF, Co-SR, or Co-TDMA (#7895)MAPC schemes and the MAPC requesting AP is requesting to establish a new MAPC agreement for any one of the Co-BF, Co-SR, or Co-TDMA (#7895)MAPC schemes by following the rules defined in 37.15.1.3.2 (MAPC agreement establishment).

A MAPC responding AP shall (#10833)not include the AP ID field in the MAPC element carried in the transmitted MAPC Negotiation Response frame, (#10833)unless the MAPC requesting AP and the MAPC responding AP do not have an established MAPC agreement for any one of the Co-BF, Co-SR, or Co-TDMA (#7896)MAPC schemes and it is accepting a new MAPC agreement for any one of Co-BF, Co-SR, or Co-TDMA (#7896)MAPC schemes by following the rules defined in 37.15.1.3.2 (MAPC agreement establishment).

NOTE—For example, if the MAPC responding AP rejects all the requests for new agreements establishment, and there are no previously existing agreements, then the AP ID assignment from the MAPC requesting AP is considered void, and the MAPC responding AP does not assign an AP ID in the MAPC Negotiation Response frame.

The AP IDs assigned (#5773)by the MAPC requesting AP and the MAPC responding AP (#5773)are no longer valid if all the established agreements among the Co-BF, Co-SR, and Co-TDMA (#7897)MAPC schemes (#5773)cease to exist between the two APs.

Copyright © 2025 IEEE. All rights reserved.
This is an unapproved IEEE Standards Draft, subject to change.

37.15.1.3.3 MAPC agreement update

To request a parameter update for an established MAPC agreement, the MAPC requesting AP shall set the MAPC Operation Type field to 1 (see Table 9-bb9 (MAPC Operation Type field values)). If the MAPC Operation Type field is set to 1, the MAPC Request Parameter Set is included according to the rules defined in 37.15.2 (Procedures for specific multi-AP coordination schemes) for each specific MAPC scheme.

To accept, reject or reject with a suggestion for alternative parameters for an update of an existing MAPC agreement, the MAPC responding AP shall follow the rules defined in 37.15.1.3.1 (General). If the MAPC responding AP rejects the update by setting the MAPC Operation Type field to 4 or 5, the agreement update procedure fails and the parameters of the MAPC agreement are not updated.

37.15.1.3.4 MAPC agreement teardown

To request the teardown of an established agreement, the MAPC requesting AP shall set the MAPC Operation Type field to 2 (see Table 9-bb9 (MAPC Operation Type field values)) in the MAPC Scheme Request field that carries the request. If the MAPC Operation Type field is set to 2, the MAPC Request Parameter Set field shall not be included.

The MAPC responding AP shall accept the request to teardown an existing MAPC agreement by following the rules defined in 37.15.1.3.1 (General).

NOTE—When a MAPC requesting AP tears down the last MAPC agreement among Co-BF, Co-SR, and Co-TDMA with a MAPC responding AP, the mutually assigned AP IDs are released and their values can be reassigned.

37.15.2 Procedures for specific multi-AP coordination schemes

37.15.2.1 Coordinated beamforming (Co-BF)

37.15.2.1.1 General

The objective of coordinated beamforming (Co-BF) is to allow more efficient medium usage by enabling concurrent transmissions of two APs with multiple transmit chains to non-AP STAs associated with the two APs respectively. (#12087)To achieve this, each AP transmits to the associated STA(s) (#10842)while minimizing interference to the non-AP STA(s) associated with the other AP by using the CSI (#7899)reports of the channels between each AP and the recipient (#10843)STA(s) of the other AP of the Co-BF transmission. (#7900)Each of the APs that have established a Co-BF agreement between the two APs shall obtain(#4181, 4389, 4421, 4857, 4984, 5115, 5309, 5476, 5575, 6606, 6804, 7456, 7686, 7902, 8309, 8334, 8578, 8907, 8976, 10844, 9869) the CSI reports required for performing the Co-BF transmission using the UHR Co-BF sounding procedure as described in 37.14 (UHR Co-BF sounding operation).

(#4764)NOTE—The number of participating APs in a Co-BF transmission, the maximum number of spatial streams for each recipient STA of the Co-BF transmission, the maximum number of non-AP STAs participating in the Co-BF transmission and other parameters are defined in 38.3.21.4 (Number of APs, STAs and spatial streams in a Co-BF PPDU).

(#7904)An AP with dot11CoBFOptionImplemented equal to true shall set the Co-BF Supported field to 1 in the MAPC Capabilities field of the MAPC element that it transmits. A Co-BF coordinating AP is an AP with dot11CoBFOptionImplemented equal to true that obtains a TXOP and transmits a Co-BF Invite frame to invite another AP to perform Co-BF transmission. A Co-BF coordinated AP is an AP with dot11CoBFOptionImplemented equal to true that receives a Co-BF Invite frame from the Co-BF coordinating AP to perform Co-BF transmission. The Co-BF transmission sequence (#10845)is defined in 37.15.2.1.3 (Co-BF transmission sequence(#10845)), and shall be initiated by the Co-BF coordinating AP. (#10846)An AP shall not schedule a non-AP STA in a Co-BF sounding sequence or a Co-BF frame

Copyright © 2025 IEEE. All rights reserved.
This is an unapproved IEEE Standards Draft, subject to change.

exchange sequence if the non-AP STA has set the Co-BF Support field to 0 in the UHR MAC Capabilities Information field of the UHR Capabilities element that it transmits..

An AP shall not initiate a(#10848) Co-BF transmission sequence with another AP unless the two APs have established a MAPC agreement for Co-BF according to the procedure defined in 37.15.2.1.2 (Co-BF negotiation) or by other means outside of the scope of this standard. (#10854)An AP that has established a Co-BF agreement with a peer AP may operate as both a Co-BF coordinating AP and a Co-BF coordinated AP.

(#7905)A non-AP STA with dot11CoBFOptionImplemented equal to true shall set the Co-BF Support field to 1 in the UHR MAC Capabilities Information field of the UHR Capabilities element that it transmits. When a non-AP STA (#10849)with dot11CoBFOptionImplemented equal to true (re)associates with an AP, the Co-BF operation is disabled by default. (#7689)A non-AP STA with dot11CoBFOptionImplemented equal to true may enable or disable the Co-BF operation by following the procedure defined in 37.31 (Procedure for operating mode and parameter updates). (#10846)An AP shall not schedule a non-AP STA in a Co-BF sounding sequence or a Co-BF frame exchange sequence if the non-AP STA has disabled Co-BF operation. (#12089)The associated AP shall accept the request and follow the procedure defined in 37.31 (Procedure for operating mode and parameter updates).

37.15.2.1.2 Co-BF negotiation

A MAPC requesting AP that follows the rules defined in 37.15.1.3 (MAPC agreement negotiation) to establish, update, or tear down a Co-BF agreement with a MAPC responding AP shall additionally follow the rules defined in this subclause. An AP that responds to a MAPC requesting AP in a MAPC agreement negotiation for a Co-BF agreement that follows the rules defined in 37.15.1.3 (MAPC agreement negotiation) shall additionally follow the rules defined in this subclause.

A MAPC requesting AP shall include a Co-BF profile in the MAPC element carried in the MAPC Negotiation Request frame initiating the MAPC agreement negotiation for a Co-BF agreement. The Co-BF profile shall include one MAPC Scheme Request field (#10851)in the MAPC Scheme Request Set field.

A MAPC responding AP shall include a Co-BF profile in the MAPC element carried in the MAPC Negotiation Response frame when responding to a MAPC requesting AP in a MAPC agreement negotiation for a Co-BF agreement. The Co-BF profile shall include one MAPC Scheme Request field (#10851)in the MAPC Scheme Request Set field.

(#4182)A MAPC requesting AP shall not set the MAPC Operation Type field to (#12091)indicate Agreement establishment (see Table 9-bb9 (MAPC Operation Type field values)) if a Co-BF agreement is already established between the MAPC requesting AP and the MAPC responding AP.

The MAPC responding AP shall not set the MAPC Operation Type field, carried in the MAPC Scheme Request field of the Co-BF profile included in the MAPC Negotiation Response frame(#10853), to 5.

(#M526)When a Co-BF MAPC agreement is established or updated, the MAPC requesting AP determines and indicates explicitly its sync-reference/sync-follower role in the MAPC Scheme Request Set field of the Co-BF profile in the MAPC Negotiation Request frame. The MAPC responding AP assumes the sync-follower/sync-reference role left by the requesting AP if it accepts the agreement establishment or agreement update.

NOTE—It's recommended to keep a Co-BF AP's sync-reference/follower role semi-static and only change it in the Co-BF MAPC agreement update when necessary.

Copyright © 2025 IEEE. All rights reserved.
This is an unapproved IEEE Standards Draft, subject to change.

37.15.2.1.3 Co-BF transmission sequence(#10845)

A Co-BF coordinating AP shall initiate Co-BF transmission with a Co-BF coordinated AP by transmitting a Co-BF Invite frame to the Co-BF coordinated AP. The Co-BF Invite frame shall be a BSRP NTB Trigger frame. The TA field of the Co-BF Invite frame shall be set to the MAC address of the Co-BF coordinating AP, and the RA field of the Co-BF Invite frame shall be set to the MAC address of the Co-BF coordinated AP. The Co-BF Invite(#4422) frame solicits an(#10855) immediate Co-BF Response frame from the Co-BF coordinated AP addressed by the Co-BF Invite frame.

A Co-BF coordinated AP that receives a Co-BF Invite frame shall transmit a Co-BF Response frame to the Co-BF coordinating AP (#10860)SIFS after the end of the PPDU carrying the Co-BF Invite frame. The Co-BF Response frame shall be a Multi-STA BlockAck frame. The TA field of the Co-BF Response frame shall be set to the MAC address of the Co-BF coordinated AP, and the RA field of the Co-BF Response frame shall be set to the MAC address of the Co-BF coordinating AP.

The Co-BF coordinating or the Co-BF coordinated APs shall include an ICF-ICR frame exchange in the Co-BF transmission frame sequence whenever any of the AP's associated STAs being scheduled for Co-BF transmission in the current TXOP operates in a mode that requires preceding frame exchanges with an ICF transmission. This is the case for DPS enabled non-AP STAs (#11489)(see 37.17.1 (Dynamic power save (DPS) operation)), and for non-AP STAs affiliated with an EMLSR non-AP MLD that the Co-BF transmission will immediately follow on (#7921)the corresponding EMLSR link (#11489)(see 37.21 (Enhanced multi-link single-radio (EMLSR) operation for a UHR non-AP MLD)). The ICF(#5577) shall not (#10858)address any non-AP STA that will not be scheduled for Co-BF transmission in the next Co-BF DL PPDU.

If the ICF and ICR frame exchange (#4779)between the Co-BF coordinating AP and its associated recipient STAs is included before (#8978)the Co-BF transmission, the Co-BF coordinating AP shall transmit the ICF (#10860)SIFS after the end of the PPDU carrying the Co-BF Response frame that accepts the Co-BF (#7925)invitation. The non-AP STAs (#10866)that are associated with the Co-BF coordinating AP and that (#10861)receive the ICF shall follow the rules defined in (#5178)37.21 (Enhanced multi-link single-radio (EMLSR) operation for a UHR non-AP MLD) and 37.17.1 (Dynamic power save (DPS) operation)(#10862) to respond (#4423)with ICR frames.

If the ICF and ICR frame exchange (#7927)between the Co-BF coordinating AP and its associated recipient STAs is not included before (#8978)the Co-BF transmission, and the ICF and ICR frame exchange (#7927)between the Co-BF coordinated AP and its associated recipient STAs is included before the Co-BF transmission, the Co-BF coordinated AP shall transmit the ICF (#10860)SIFS after the end of the PPDU carrying the Co-BF Response frame that accepts the Co-BF (#7925)invitation.

If the ICF and ICR frame exchange(#7927) between the Co-BF coordinating AP and its associated recipient STAs is included before (#8978)the Co-BF transmission, and the ICF and ICR frame exchange (#7927)between the Co-BF coordinated AP and its associated recipient STAs is included before the Co-BF transmission, the Co-BF coordinated AP shall transmit the ICF 2×aSIFSTime plus the duration of the ICF and ICR frame exchange between the Co-BF coordinating AP and its associated recipient STAs that is indicated in the Co-BF Invite frame after the end of the PPDU carrying the Co-BF Response frame that accepts the Co-BF (#7925)invitation.

The non-AP STAs(#10866) that are associated with the Co-BF coordinated AP and that receive the ICF shall follow the rules defined in (#5179)37.21 (Enhanced multi-link single-radio (EMLSR) operation for a UHR non-AP MLD) and 37.17.1 (Dynamic power save (DPS) operation) to respond (#4423)with ICR frames.

Copyright © 2025 IEEE. All rights reserved.
This is an unapproved IEEE Standards Draft, subject to change.

A Co-BF coordinating (#7931)AP or a Co-BF coordinated AP transmitting any ICF (#5578)during the Co-BF transmission (#10872)sequence to an associated non-AP STA shall include an indication to (#10868)the non-AP STA to use an extended timeout period for the following cases:

— The STA is a DPS enabled non-AP STA in which case the extended timeout period corresponds to the time the DPS STA stays in the HC mode before switching to LC mode when it is not included in any frame transmission or reception.

— The STA is operating on an EMLSR link of its affiliated non-AP MLD in which case the extended timeout period corresponds to the non-AP MLD's switch back to listening operation(#10869) on (#10870)the EMLSR link.

The duration of the extended timeout period shall be (#Ed2)indicated by the Extended Timeout Duration field in the Feedback User Info field (#Ed2)of the ICF (#Ed2)addressed to the associated (#Ed2)non-AP STA. The AP shall indicate a duration for the extended timeout period that is longer than the longest inactivity period the associated non-AP STA(s)(#10871) scheduled in the Co-BF transmission sequence will experience within the Co-BF transmission sequence.

A (#10873)non-AP STA that is operating on an EMLSR link of its affiliated non-AP MLD during the Co-BF transmission (#10872)sequence shall follow the rules defined in 35.3.17 (Enhanced multi-link single-radio (EMLSR) operation) for switching back to listening operation except for the following:

— (#10874)The non-AP STA uses an extended timeout period, instead of aSIFSTime + aSlotTime + aRxPHYStartDelay, as timeout interval starting at the end of the PPDU transmitted by the non-AP STA (#10875)as a response to the most recently received frame from the AP or starting at the end of the reception of the PPDU containing a frame, for the non-AP STA from the AP, that does not require immediate acknowledgement.

— During the extended timeout period, (#10876)the non-AP STA shall not switch back to listening operation.

After the Co-BF coordinating or Co-BF coordinated AP receives an ICR (#Ed2)frame from (#10877)an associated non-AP STA (#10878)that is affiliated with a non-AP MLD and is operating on an EMLSR link during the Co-BF transmission (#10872)sequence, the other AP(s) affiliated with the AP MLD shall not transmit frames to the other non-AP STA(s) affiliated with the non-AP MLD on the other EMLSR link(s) during the extended (#5180)timeout period.

When an AP transmits an ICF (#11502)to a DPS STA that is scheduled in a Co-BF (#5311)transmission sequence, the ICF shall not be an RTS frame.

The Co-BF coordinating AP shall transmit a Co-BF Trigger frame to the Co-BF coordinated AP prior to the two data PPDUs transmitted simultaneously by the Co-BF coordinating AP and the Co-BF coordinated AP.

If the ICF and ICR frame exchange (#10883)between the Co-BF coordinating AP and its associated recipient STAs is not included before (#10881)the Co-BF transmission, and the ICF and ICR frame exchange (#10883)between the Co-BF coordinated AP and its associated recipient STAs is not included before the Co-BF transmission, the Co-BF coordinating AP shall transmit the Co-BF Trigger frame a (#5082)SIFS after the end of the PPDU carrying the Co-BF Response frame that accepts the Co-BF invite.

If the ICF and ICR frame exchange (#10883)between the Co-BF coordinating AP and its associated recipient STAs is included before (#10881)the Co-BF transmission, and the ICF and ICR frame exchange (#10883)between the Co-BF coordinated AP and its associated recipient STAs is not included before the Co-BF transmission, the Co-BF coordinating AP shall transmit the Co-BF Trigger frame (#5082)a SIFS after the end of the PPDU carrying the ICR transmitted by the non-AP STA(s) associated with the Co-BF coordinating AP.

Copyright © 2025 IEEE. All rights reserved.
This is an unapproved IEEE Standards Draft, subject to change.

If the ICF and ICR frame exchange (#10883)between the Co-BF coordinating AP and its associated recipient STAs is not included before (#10881)the Co-BF transmission, and the ICF and ICR frame exchange (#10883)between the Co-BF coordinated AP and its associated recipient STAs is included before the Co-BF transmission, the Co-BF coordinating AP shall transmit the Co-BF Trigger frame 2× aSIFSTime plus the duration of the ICF and ICR frame exchange between the Co-BF coordinated AP and its associated recipient STAs after the end of the PPDU carrying the Co-BF Response frame that accepts the Co-BF invite. The duration of the ICF and ICR frame exchange between the Co-BF coordinated AP and its associated recipient STAs is indicated in the Co-BF Response frame.

If the ICF and ICR frame exchange (#10883)between the Co-BF coordinating AP and its associated recipient STAs is included before (#10881)the Co-BF transmission, and the ICF and ICR frame exchange (#10883)between the Co-BF coordinated AP and its associated recipient STAs is included before the Co-BF transmission, the Co-BF coordinating AP shall transmit the Co-BF Trigger frame 2×aSIFSTime plus the duration of the ICF and ICR frame exchange between the Co-BF coordinated AP and its associated recipient STAs after the end of the PPDU carrying the ICR transmitted by the non-AP STA(s) associated with the Co-BF coordinating AP. The duration of the ICF and ICR frame exchange between the Co-BF coordinated AP and its associated recipient STAs is indicated in the Co-BF Response frame.

37.15.2.1.4 Co-BF transmission procedure

In order to perform Co-BF transmission, a Co-BF coordinating AP and a Co-BF coordinated AP shall follow the rules defined in 37.15.2.1.3 (Co-BF transmission sequence(#10845)), and shall additionally follow the rules defined in this subclause.

The Co-BF Invite frame shall include the following information:

— The minimum number of data OFDM symbols of the Co-BF transmission
— The maximum number of data OFDM symbols of the Co-BF transmission
— The PHY version of the Co-BF transmission
— The bandwidth of the Co-BF transmission
— The puncturing pattern of the Co-BF transmission
— The GI and the LTF size of the Co-BF transmission
— The maximum total number of spatial streams allowed for the Co-BF coordinated AP of the Co-BF transmission
— The number of recipient STAs of the Co-BF transmission that are associated with the Co-BF coordinating AP
— The STA ID of each recipient STA of the Co-BF transmission that is associated with the Co-BF coordinating AP
— The number of spatial streams for each recipient STA of the Co-BF transmission that is associated with the Co-BF coordinating AP
— Whether ICF and ICR frame exchange is included between the Co-BF coordinating AP and its associated recipient STAs before Co-BF transmission
— The duration of the ICF and ICR frame exchange between the Co-BF coordinating AP and its associated recipient STAs before Co-BF transmission, which includes the SIFS between the ICF and the ICR, if the ICF and ICR frame exchange is included.

If the Co-BF coordinated AP accepts the Co-BF invite, the Co-BF Response frame shall include the following information:

— The suggested number of data OFDM symbols of the Co-BF transmission. The suggested value shall not be smaller than the minimum number of data OFDM symbols indicated by the Co-BF coordinating AP in the Co-BF Invite frame.

Copyright © 2025 IEEE. All rights reserved.
This is an unapproved IEEE Standards Draft, subject to change.

NOTE—The Co-BF coordinating AP might ignore the Co-BF coordinated AP's suggestion

— The PHY version of the Co-BF transmission
— Whether extra LTF to be used in the Co-BF transmission is allowed by the Co-BF coordinated AP
— The number of recipient STAs of the Co-BF transmission that are associated with the Co-BF coordinated AP
— The STA ID of each recipient STA of the Co-BF transmission that is associated with the Co-BF coordinated AP
— The MCS for each recipient STA of the Co-BF transmission that is associated with the Co-BF coordinated AP
— The number of spatial streams for each recipient STA of the Co-BF transmission that is associated with the Co-BF coordinated AP
— Whether 2xLDPC will be used for each recipient STA of the Co-BF transmission that is associated with the Co-BF coordinated AP
— Whether ICF and ICR frame exchange is included between the Co-BF coordinated AP and its associated recipient STAs before Co-BF transmission
— The duration of the ICF and ICR frame exchange between the Co-BF coordinated AP and its associated recipient STAs before Co-BF transmission, which includes the SIFS between the ICF and the ICR, if the ICF and ICR frame exchange is included.

If the Co-BF coordinated AP rejects the Co-BF invite, the Co-BF Response frame should include the reason for rejection.

In each of the Co-BF Invite and Co-BF Response frames, if there is information for more than one user, the users are ordered according to the number of spatial streams in non-increasing order.

The Co-BF Trigger frame is used to ensure time and frequency synchronization between the two data PPDUs, and conveys the information needed to construct a common preamble for the two data PPDUs. The Co-BF Trigger frame shall include the following information:

— The value to be set in the Length field in the L-SIG field of the PPDU of the Co-BF transmission
— The PHY version of the Co-BF transmission
— The bandwidth of the Co-BF transmission
— The puncturing pattern of the Co-BF transmission
— The BSS color of the Co-BF coordinating AP
— The BSS color of the Co-BF coordinated AP
— The TXOP duration to be set in the TXOP field in the U-SIG of the Co-BF transmission
— The number of UHR-SIG symbols of the Co-BF transmission
— The GI and the LTF size of the Co-BF transmission
— The number of UHR-LTF symbols of the Co-BF transmission
— The total number of recipient STAs of the Co-BF transmission
— The STA ID of each recipient STA of the Co-BF transmission
— Which BSS each recipient STA of the Co-BF transmission belongs to
— NOTE—the BSS is identified by the BSS color
— The MCS of each recipient STA of the Co-BF transmission
— The spatial configuration of each recipient STA of the Co-BF transmission
— Whether 2xLDPC will be used for each recipient STA of the Co-BF transmission

Copyright © 2025 IEEE. All rights reserved.
This is an unapproved IEEE Standards Draft, subject to change.

The order of user information in the Co-BF Trigger frame shall be the same as the order of users in the UHR-SIG User field for the Co-BF transmission. The ordering of user information follows the rules described in 38.3.15.9.5 (User Specific field). In addition to the above rules, the order of user information of the users associated with the Co-BF coordinating AP in the Co-BF Trigger frame shall be the same as that in the Co-BF Invite frame. The order of user information of the users associated with the Co-BF coordinated AP in the Co-BF Trigger frame shall be the same as that in the Co-BF Response frame.

The user information in the Co-BF Trigger frame and in the UHR-SIG of the Co-BF transmission corresponds to all the recipient STAs that are indicated in the Co-BF Invite and Co-BF Response frames. The number of spatial streams for each recipient STA interpreted from the spatial configuration in the Co-BF Trigger frame shall be the same as the number of spatial streams for the same STA that is indicated in the Co-BF Invite and Co-BF Response frames. The MCS and 2xLDPC bit for each recipient STA indicated in the Co-BF Trigger frame shall be the same as the MCS and 2xLDPC bit indicated in the Co-BF Response frame

The Co-BF coordinating AP and the Co-BF coordinated AP shall follow the rules defined in 38.3.24 (Transmit requirement for UHR Co-BF sounding sequence and Co-BF transmission) to apply frequency pre-correction to the PPDUs containing the Co-BF Trigger frame and the Co-BF data frames.

If the minimum number of data OFDM symbols of the Co-BF transmission indicated in the Co-BF Invite frame corresponds to Navbits > 3888 bits for a user of the coordinated AP, then the coordinated AP may indicate that 2xLDPC will be used for the user in the Co-BF Response frame.

If the minimum number of data OFDM symbols of the Co-BF transmission indicated in the Co-BF Invite frame corresponds to Navbits ≤ 3888 bits for a user of the coordinated AP, then the coordinated AP shall not indicate that 2xLDPC will be used for the user in the Co-BF Response frame.

A coordinating AP shall not choose a value for the Length field in the L-SIG field of the Co-BF PPDU in the Co-BF Trigger frame that corresponds to a number of OFDM symbols in the Data field which is smaller than the minimum number of data OFDM symbols the coordinating AP had indicated in the Co-BF Invite frame.(#M524)

To help the coordinated AP choose an appropriate LDPC codeword length, the minimum number of data OFDM symbols of the Co-BF transmission indicated in the Co-BF Invite frame should be greater than or equal to 0.5 times the maximum number of data OFDM symbols of the Co-BF transmission indicated in the Co-BF Invite frame.(#M525)

37.15.2.2 Coordinated spatial reuse (Co-SR)

37.15.2.2.1 General

The objective of coordinated spatial reuse (Co-SR) is to allow more efficient medium usage by concurrent transmissions from multiple APs using transmit power control. The number of participating APs in a Co-SR transmission shall be 2.

A Co-SR coordinating AP is an AP with dot11CoSROptionImplemented equal to true that obtains a TXOP and initiates Co-SR transmission with another AP. A Co-SR coordinated AP is an AP with dot11CoSROptionImplemented equal to true that participates in Co-SR transmission initiated by the Co-SR coordinating AP. The Co-SR transmission shall be initiated by the Co-SR coordinating AP. An AP shall not perform a Co-SR transmission to a STA with dot11CoSROptionImplemented equal to false or with dot11CoSROptionImplemented equal to true but has disabled the Co-SR operation. A non-AP STA with dot11CoSROptionImplemented equal to true may enable or disable the Co-SR operation by following the procedure defined in 37.31 (Procedure for operating mode and parameter updates).

Copyright © 2025 IEEE. All rights reserved.
This is an unapproved IEEE Standards Draft, subject to change.

An AP shall not initiate Co-SR transmission with another AP unless the two APs have established a MAPC agreement for Co-SR according to the procedure defined in 37.15.2.2.2 (Co-SR negotiation) or by other means outside of the scope of this standard.

When a non-AP STA that supports Co-SR operation (re)associates with an AP, the Co-SR operation is disabled by default. A UHR non-AP STA that supports Co-SR operation and that intends to enable or disable Co-SR operation shall follow the rules on how often such requests may be sent as defined in this subclause and the procedure defined in 37.31 (Procedure for operating mode and parameter updates). The associated AP shall accept the request and follow the procedure defined in 37.31 (Procedure for operating mode and parameter updates).

37.15.2.2.2 Co-SR negotiation

A MAPC requesting AP that follows the rules defined in 37.15.1.3 (MAPC agreement negotiation) to establish, update, or tear down a Co-SR agreement with a MAPC responding AP shall additionally follow the rules defined in this subclause. A MAPC responding AP that responds to a MAPC requesting AP in a MAPC agreement negotiation for Co-SR agreement that follows the rules defined in 37.15.1.3 (MAPC agreement negotiation) shall additionally follow the rules defined in this subclause.

A MAPC requesting AP shall include a Co-SR profile in the MAPC element carried in the MAPC Negotiation Request frame initiating the MAPC agreement negotiation for a Co-SR agreement. The Co-SR profile shall include one MAPC Scheme Request field.

A MAPC responding AP shall include a Co-SR profile in the MAPC element carried in the MAPC Negotiation Response frame when responding to a MAPC requesting AP in a MAPC agreement negotiation for a Co-SR agreement. The Co-SR profile shall include one MAPC Scheme Request field.

A MAPC requesting AP shall not set the MAPC Operation Type field to 1 or 2 if there is no established Co-SR agreement between the MAPC requesting AP and the MAPC responding AP. A MAPC requesting AP shall not set the MAPC Operation Type field to 0 if a Co-SR agreement is already established between the MAPC requesting AP and the MAPC responding AP.

The MAPC responding AP shall not set the MAPC Operation Type field, carried in the MAPC Scheme Request field of the Co-SR profile included in the MAPC Negotiation Response frame to 5.

37.15.2.2.3 Frame Exchange sequence for Co-SR

Co-SR follows the same frame exchange sequence as Co-BF as defined in 37.15.2.1.3 (Co-BF transmission sequence(#10845)), where

- The rules defined for Co-BF coordinating AP shall be applied to Co-SR coordinating AP,
- The rules defined for Co-BF coordinated AP shall be applied to Co-SR coordinated AP,
- Co-BF Invite frame shall be replaced by Co-SR Invite frame,
- Co-BF Response frame shall be replaced by Co-SR Response frame,
- Co-BF Trigger frame shall be replaced by Co-SR Trigger frame,
- Co-BF transmission shall be replaced by Co-SR transmission.

37.15.2.2.4 Co-SR transmission

In order to perform Co-SR transmission, a Co-SR coordinating AP and a Co-SR coordinated AP shall follow the rules defined in 37.15.2.2.3 (Frame Exchange sequence for Co-SR), and shall additionally follow the rules defined in this subclause.

Copyright © 2025 IEEE. All rights reserved.
This is an unapproved IEEE Standards Draft, subject to change.

The Co-SR Invite frame shall include the following information:

— The minimum number of data OFDM symbols of the Co-SR transmission,

— The maximum number of data OFDM symbols of the Co-SR transmission,

— The intended PHY version of the Co-SR coordinating AP's PPDU in the upcoming Co-SR transmission,

— The GI and the LTF size of the Co-SR transmission,

— The number of LTF symbols of the Co-SR transmission,

— Whether ICF and ICR frame exchange is included between the Co-SR coordinating AP and its associated recipient STAs before Co-SR transmission,

— The duration of the ICF and ICR frame exchange between the Co-SR coordinating AP and its associated recipient STAs before Co-SR transmission, which includes the SIFS between the ICF and the ICR, if the ICF and ICR frame exchange is included,

If the Co-SR coordinated AP accepts the Co-SR invite, the Co-SR Response frame shall include the following information:

— The suggested number of data OFDM symbols of the Co-SR transmission,

— The intended PHY version of the Co-SR coordinated AP's PPDU in the upcoming Co-SR transmission,

— Whether ICF and ICR frame exchange is included between the Co-SR coordinated AP and its associated recipient STAs before Co-SR transmission,

— The duration of the ICF and ICR frame exchange between the Co-SR coordinated AP and its associated recipient STAs before Co-SR transmission, which includes the SIFS between the ICF and the ICR, if the ICF and ICR frame exchange is included.

If the Co-SR coordinated AP rejects the Co-SR invite, the Co-SR Response frame should include the reason for rejection. When the Co-SR Invite frame indicates 2× LTF type and the intended number of LTF symbols, the Co-SR coordinated AP may reject the Co-SR invitation due to the number of LTF limitation.

The Co-SR Trigger frame shall include the following information:

— The duration of the data PPDU transmitted by the Co-SR coordinating AP and the duration of the data PPDU transmitted by the Co-SR coordinated AP, which shall be the same.

— The transmit power limit of the Co-SR coordinated AP. The value of the transmit power limit shall not be lower than the value indicated by the Co-SR coordinated AP in the MAPC Negotiation Request frame or MAPC Negotiation Response frame during the MAPC agreement establishment procedure as defined in 37.15.2.2.2 (Co-SR negotiation).

— The transmit power of the Co-SR coordinating AP.

— The PHY version of the data PPDU transmitted by the Co-SR coordinating AP and the PHY version of the data PPDU transmitted by the Co-SR coordinated AP.

The Co-SR Trigger frame shall include one User Info field that corresponds to the Co-SR coordinated AP. The User Info field shall be set as follows:

— The AID12 field shall be set to the AP ID of the Co-SR coordinated AP, which is assigned by the Co-SR coordinating AP during the MAPC agreement establishment procedure as defined in 37.15.2.2.2 (Co-SR negotiation).

After transmitting the Co-SR Trigger frame, the Co-SR coordinating AP shall transmit a data PPDU where the TXVECTOR parameters shall be set as follows:

— The L_LENGTH parameter is set to the value indicated in the Co-SR Trigger frame.

Copyright © 2025 IEEE. All rights reserved.
This is an unapproved IEEE Standards Draft, subject to change.

After receiving the Co-SR Trigger frame, the Co-SR coordinated AP shall transmit a data PPDU where the TXVECTOR parameters shall be set as follows:

— The L_LENGTH parameter is set to the value indicated in the Co-SR Trigger frame,

— The TXPWR_LEVEL_INDEX parameter is set to a value that leads to a transmit power less than or equal to the transmit power indicated in the Co-SR Trigger frame.

37.15.2.3 Coordinated time division multiple access (Co-TDMA)

37.15.2.3.1 General

The coordinated time division multiple access (Co-TDMA) procedure enables an AP with dot11CoTDMAOptionImplemented equal to true to allocate a portion of an obtained TXOP sequentially to one or more non-colocated APs with dot11CoTDMAOptionImplemented equal to true. An AP that receives a time allocation from another AP as part of the Co-TDMA procedure exchanges one or more PPDUs during the allocated time.

An AP shall not initiate a Co-TDMA procedure with another AP if any of the following conditions are true:

— No MAPC agreement on Co-TDMA exists between the APs.

— The primary 20 MHz channels of the two APs' BSS differ.

— Both APs are part of the same colocated AP set.

(#10936)A Co-TDMA negotiation to establish, update, and tear down a Co-TDMA agreement shall be performed by following either:

— the rules defined in 37.15.1.3 (MAPC agreement negotiation) and 37.15.2.3.2 (Co-TDMA negotiations), or

— other means that are outside the scope of this standard.

Figure 37-5 (An example(#10938) of the Co-TDMA procedure between three APs) shows an example of the(#10937) Co-TDMA procedure that includes a polling phase, a TXOP allocation phase, and a TXOP return phase.(#6616)

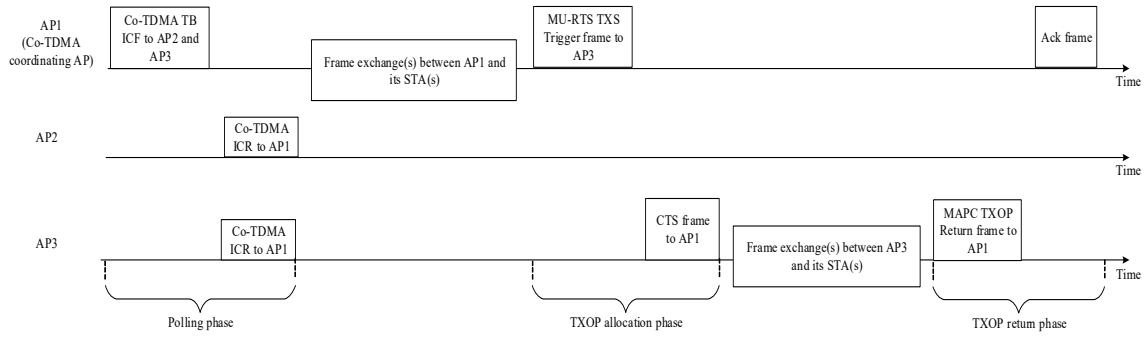

Figure 37-5—An example(#10938) of the Co-TDMA procedure between three APs

37.15.2.3.2 Co-TDMA negotiations

(#4297,#4528,#10171,#10518,#10942,#10943)A MAPC requesting AP that follows the rules defined in 37.15.1.3 (MAPC agreement negotiation) to establish, update, or tear down a Co-TDMA agreement with a MAPC responding AP shall additionally follow the rules defined in this subclause. (#4297,#5572)A MAPC responding AP that responds to (#10944)a MAPC Negotiation Request frame from (#4297)the MAPC requesting AP during a MAPC agreement negotiation for a Co-TDMA agreement and that follows the rules

Copyright © 2025 IEEE. All rights reserved.
This is an unapproved IEEE Standards Draft, subject to change.

defined in 37.15.1.3 (MAPC agreement negotiation) shall additionally follow the rules defined in this subclause.

A (#4297)MAPC requesting AP shall include a Co-TDMA profile (see 9.4.2.355.4.4 (Co-TDMA profile)) in the MAPC element carried in a MAPC Negotiation Request frame. The Co-TDMA profile shall include one MAPC Scheme Request field (#10940)in the MAPC Scheme Request Set field.

A (#4297)MAPC requesting AP shall not set the MAPC Operation Type field to indicate Agreement establishment (see Table 9-bb9 (MAPC Operation Type field values)) if a Co-TDMA agreement is already established between the (#4297)MAPC requesting AP and the (#4297)MAPC responding AP.

(#7956, #12095, #4297, #5572, #7957)An AP that has established a Co-TDMA agreement with a peer AP may operate as both a Co-TDMA coordinating AP and a Co-TDMA coordinated AP.

37.15.2.3.3 Polling phase

A Co-TDMA coordinating AP shall announce its intention of allocating a portion of an obtained TXOP to another AP in an ICF sent at the beginning of the TXOP. The ICF polls one or more APs that have established MAPC agreements for Co-TDMA with the Co-TDMA coordinating AP (see 37.15.1.3 (MAPC agreement negotiation)), to solicit response(s) from polled AP(s) and determine their intent to receive a time allocation from the Co-TDMA coordinating AP within the TXOP.

A Co-TDMA coordinating AP may solicit a Co-TDMA ICR in a TB PPDU from another AP with which it has a MAPC agreement for Co-TDMA, only if the AP to be polled has indicated support for transmitting a Co-TDMA ICR in a TB PPDU by setting the AP TB PPDU Response Supported field in the MAPC element to 1.

The ICF that polls the AP(s) as part of the Co-TDMA procedure and solicits a Co-TDMA ICR from a polled AP in a TB PPDU is called a Co-TDMA TB ICF.

The Co-TDMA TB ICF shall be a BSRP Trigger frame.

(#12098,#11533)When polling a single AP, a Co-TDMA coordinating AP may transmit a Co-TDMA NTB ICF to solicit a Co-TDMA ICR from the polled AP in a non-HT PPDU or a non-HT duplicate PPDU.

The Co-TDMA NTB ICF shall be a BSRP NTB Trigger frame (see 9.3.1.22.14 (BSRP Trigger frame format))(#10521, #10184).

The Co-TDMA coordinating AP identifies a polled AP in the Co-TDMA TB ICF or the Co-TDMA NTB ICF by setting the AID12 field of a User Info field to the polled AP's AP ID, as assigned by the Co-TDMA coordinating AP.

The Duration/ID(#5573) field of the Co-TDMA TB ICF and the Co-TDMA NTB ICF shall be set to one SIFS plus the time required to transmit the solicited Co-TDMA ICR(s) from the polled AP(s).

When a Co-TDMA coordinating AP transmits a Co-TDMA TB ICF, the AP shall set the Feedback Type field of the Feedback User Info field (see 9.3.1.22.7 (Feedback User Info field)) of the Co-TDMA TB ICF to 3.

When a Co-TDMA coordinating AP transmits a Co-TDMA NTB ICF, the AP shall set the Feedback Type field of a User Info field addressed to the polled AP to 3.

A polled AP shall transmit a Co-TDMA ICR, in response to a received Co-TDMA TB ICF or the Co-TDMA NTB ICF that includes a User Info field with an AID12 field set to the AP ID of the polled AP as assigned

Copyright © 2025 IEEE. All rights reserved.
This is an unapproved IEEE Standards Draft, subject to change.

by the Co-TDMA coordinating AP, subject to the rules defined for non-AP STAs in 26.5.2.5 (UL MU CS mechanism) and 35.5.2.4 (UL MU CS mechanism for EHT STAs).

The Co-TDMA ICR shall be a Multi-STA BlockAck frame with the following field assignments(#10954) in the Per AID TID Info field:

— The Feedback Type field shall be set to 3.
— The AID11 field shall be set to 0.
— The Ack Type field and TID field shall be set to 0 and 13, respectively.
— The TXOP Sharing Solicited field of the Feedback field shall be set to 1 if the polled AP intends to receive a time allocation from the Co-TDMA coordinating AP during the current TXOP; otherwise, it shall be set to 0.

If a Co-TDMA coordinating AP does not receive a Co-TDMA ICR from a polled AP, the Co-TDMA coordinating AP shall consider that the polled AP does not wish to receive a time allocation from the Co-TDMA coordinating AP during the current TXOP.

A polled AP may use the duration indicated by the Max TXOP Allocation Under Consideration field in a Co-TDMA TB ICF or a Co-TDMA NTB ICF(#8990) to determine the value to set for the TXOP Sharing Solicited field of a Multi-STA BlockAck frame.

NOTE—When performing a Co-TDMA agreement by following the rules defined in 37.15.1.3 (MAPC agreement negotiation) and 37.15.2.3.2 (Co-TDMA negotiations), an AP that receives a MAPC Negotiation Request frame can determine the overlapping BSS bandwidth based on the bandwidth configuration information included in the Bandwidth Control field (see Figure 9-aa24 (Bandwidth Control field format)).

37.15.2.3.4 TXOP allocation phase

To allocate a portion of an obtained TXOP, the Co-TDMA coordinating AP shall transmit an MU-RTS TXS Trigger frame, with the TXS Mode field equal to 2 (see 9.3.1.22.13 (MU-RTS Trigger frame format))(#9499), only to a polled AP that is not colocated with the Co-TDMA coordinating AP and from which the Co-TDMA coordinating AP has received a Co-TDMA ICR in the same TXOP(#10178) with the TXOP Sharing Solicited field equal to 1.

The time allocation to the Co-TDMA coordinated AP shall start at the end of the PPDU that contains the MU-RTS TXS Trigger frame.

The Duration/ID(#5574) field of the MU-RTS TXS Trigger frame shall be set to one SIFS plus the time required to transmit the solicited CTS response frame.

A Co-TDMA coordinating AP identifies the Co-TDMA coordinated AP to which a portion of the obtained TXOP is to be allocated by setting the AID12 field of the User Info field of the MU-RTS TXS Trigger frame to the Co-TDMA coordinated AP's AP ID, as assigned by the Co-TDMA coordinating AP.

After a Co-TDMA coordinated AP receives an MU-RTS TXS Trigger frame from the Co-TDMA coordinating AP that contains a User Info field in which the AID12 field identifies(#10961) the Co-TDMA coordinated AP, the Co-TDMA coordinated AP may exchange one or more PPDUs within the time allocation signaled in the MU-RTS TXS Trigger frame. The first PPDU of this exchange shall carry a CTS frame, which is transmitted as per the rules defined in 26.2.6.3 (CTS frame sent in response to an MU-RTS Trigger frame) with the exceptions stated in 37.15.2.3 (Coordinated time division multiple access (Co-TDMA)).

The time allocated to a Co-TDMA coordinated AP identified in the MU-RTS TXS Trigger frame shall be(#10963) specified in the Allocation Duration field in the MU-RTS TXS Trigger frame.

Copyright © 2025 IEEE. All rights reserved.
This is an unapproved IEEE Standards Draft, subject to change.

The Co-TDMA coordinating AP shall follow 37.27 (Fairness considerations for TXOP sharing) when determining the time allocated to (#10964)the Co-TDMA coordinated AP(s) within an obtained TXOP.

During the allocated time, any frame exchange between a Co-TDMA coordinated AP and its associated non-AP (#5233, #9494, #10179)STA(s) shall be from the same or higher priority ACs as the primary AC of the obtained TXOP indicated in the Primary AC field of the Co-TDMA TB ICF or the Co-TDMA NTB ICF transmitted by the Co-TDMA coordinating AP during the polling phase of the Co-TDMA procedure(#10966).

In an MU-RTS TXS Trigger frame that allocates a portion of the obtained(#10967) TXOP to a Co-TDMA coordinated AP, the Co-TDMA coordinating AP shall not allocate an RU to the Co-TDMA coordinated AP outside the overlapping portion of the BSS bandwidth of the Co-TDMA coordinated AP and the bandwidth of the PPDU carrying the MU-RTS TXS Trigger frame.

The PPDU carrying the CTS frame, sent by a Co-TDMA coordinated AP,(#10969) shall be transmitted on the 20 MHz channel(s) indicated in the RU Allocation field of the User Info field of the MU-RTS TXS Trigger frame that allocated the time to the Co-TDMA coordinated AP.

During the time allocated by a Co-TDMA coordinating AP, a Co-TDMA coordinated AP that is addressed by an(#10970) MU-RTS TXS Trigger frame shall not transmit any PPDU that occupies subchannels other than those used when transmitting the CTS frame in response to the MU-RTS TXS Trigger frame.

37.15.2.3.5 TXOP return phase

A Co-TDMA coordinated AP may return the remainder of the allocated time (if any) to the Co-TDMA coordinating AP if the Co-TDMA coordinating AP has indicated support for TXOP return by setting the Rx TXOP Return Support field to 1 in the MAPC element, otherwise the Co-TDMA coordinated AP shall not return the TXOP. If the Co-TDMA coordinated AP is to return the TXOP back to the Co-TDMA coordinating AP, any NAV set by the Co-TDMA coordinated AP during the allocated time shall end before this AP returns the TXOP to the Co-TDMA coordinating AP. Otherwise, any NAV set by the Co-TDMA coordinated AP during the allocated time shall end before the end of the allocated duration.

A Co-TDMA coordinated AP shall not transmit a CF-End frame in the allocated time to truncate the TXOP if the AP is to return the TXOP.

As part of Co-TDMA operation, when the Co-TDMA coordinated AP returns the TXOP to the Co-TDMA coordinating AP, the TXOP return shall be indicated, within the allocated time, via a CAS Control field with the RDG/More PPDU field equal to 0. This CAS Control field is carried in an HE variant HT Control field in the MAC header of a MAPC TXOP Return frame (see 9.6.7.70 (MAPC TXOP Return frame format)) that includes only the Action field in the frame body.

The Co-TDMA coordinating AP shall respond with an Ack frame when it receives the TXOP return indication from a Co-TDMA coordinated AP.

No other MAPC Public Action frame shall carry a CAS Control field in the HT Control field of the frame's MAC header.

A Co-TDMA coordinating AP that has indicated support for TXOP return by setting the Rx TXOP Return Support field to 1 in the MAPC element and that is soliciting a TXOP return from a Co-TDMA coordinated AP shall set the TXOP Return Solicited field of the Co-TDMA TB ICF or the Co-TDMA NTB ICF to 1; otherwise, the Co-TDMA coordinating AP shall set the TXOP Return Solicited field to 0.

The Co-TDMA coordinated AP shall return the TXOP after receiving a Co-TDMA TB ICF or a Co-TDMA NTB ICF that has set the TXOP Return Solicited field to 1.

Copyright © 2025 IEEE. All rights reserved.
This is an unapproved IEEE Standards Draft, subject to change.

37.15.2.4 Coordinated R-TWT (Co-RTWT)

37.15.2.4.1 General

Coordinated restricted target wake time (Co-RTWT) operations described in 37.15.2.4 (Coordinated R-TWT (Co-RTWT)) enable an AP to coordinate its R-TWT schedule(s) with OBSS AP(s) and/or obtain extended protection for its R-TWT schedule(s) from OBSS APs and their BSSs.

A Co-RTWT requesting AP is an AP with dot11CoRTWTOptionImplemented equal to true that requests protection for one or more of its R-TWT schedules. A Co-RTWT requesting AP may request protection for its R-TWT schedule(s) either via Co-RTWT negotiations or via other means out of the scope of this standard.

A Co-RTWT coordinated AP is an AP with dot11CoRTWTOptionImplemented equal to true that extends protection for R-TWT schedule(s) that are requested by a Co-RTWT requesting AP, either via Co-RTWT negotiations or via other means out of the scope of this standard, by following the rules defined in 37.15.2.4.3 (Co-RTWT announcement rules) and 37.15.2.4.4 (TXOP and backoff procedure rules for Co-RTWT).

Co-RTWT negotiation(s) to establish Co-RTWT agreement(s) are performed by following the rules defined in 37.15.1.3 (MAPC agreement negotiation) and 37.15.2.4.2 (Co-RTWT negotiations).

NOTE—An AP with dot11CoRTWTOptionImplemented set to 1 can participate in Co-RTWT by means that do not follow the protocol defined in 37.8.1 and are out of the scope of this standard. For example, an AP (Co-RTWT coordinated AP) can be configured by the network to extend protection for R-TWT schedules of another AP (Co-RTWT requesting AP) in the same ESS. In another example, an AP (Co-RTWT coordinated AP) might listen to the Beacon frame of another AP (Co-RTWT requesting AP) in the same ESS and extend protection for R-TWT schedules that are announced in that Beacon frame.

37.15.2.4.2 Co-RTWT negotiations

A Co-RTWT requesting AP that follow the rules defined in 37.15.1.3 (MAPC agreement negotiation) to establish, update, or tear down Co-RTWT agreement(s) is also a MAPC requesting AP and additionally follows the rules defined in this subclause.

The Co-RTWT requesting AP shall include a Co-RTWT profile in the MAPC element carried in a transmitted individually addressed MAPC Negotiation Request frame. The Co-RTWT profile shall include one or more MAPC Scheme Request fields, each corresponding to an R-TWT schedule. The MAPC Per-Scheme Info Present field shall be set to 1. The Broadcast TWT ID field identifies the R-TWT schedule, and shall be set equal to the value of the Broadcast TWT ID field of the Restricted TWT Parameter Set field corresponding to the R-TWT schedule that is announced by the Co-RTWT requesting AP in its own BSS (see 35.8.3.1 (Rules for R-TWT scheduling AP)). The MAPC Operation Type shall be set to 0 to establish a new Co-RTWT agreement, to 1 to update an existing Co-RTWT agreement, or to 2 to teardown an existing Co-RTWT agreement (see Table 9-bb9 (MAPC Operation Type field values)). If the MAPC Operation Type is set to 0 or 1, the MAPC Request Parameter Set field defined in 9.4.2.355.4.5 (Co-RTWT profile) shall be included in the MAPC Scheme Request field. The MAPC Operation Type field shall not be set to 1 or 2 if a Co-RTWT agreement is not yet established for the R-TWT schedule identified by the value of the Broadcast TWT ID field carried in this MAPC Scheme Request field. The MAPC Operation Type field shall not be set to 0 if a Co-RTWT agreement is already established for the R-TWT schedule identified by the value of the Broadcast TWT ID field carried in this MAPC Scheme Request field.

If the MAPC Request Parameter Set field is included in the MAPC Scheme Request field for an R-TWT schedule, the MAPC Request Parameter Set field shall specify the associated Co-RTWT Parameter Set field as described in 9.4.2.355.4.5 (Co-RTWT profile) and in accordance to the Restricted TWT Parameter Set

Copyright © 2025 IEEE. All rights reserved.
This is an unapproved IEEE Standards Draft, subject to change.

field corresponding to the associated R-TWT schedule that is announced by the Co-RTWT requesting AP in its own BSS as defined in 35.8.3.1 (Rules for R-TWT scheduling AP).

An AP that responds to a Co-RTWT requesting AP in a MAPC agreement negotiation for Co-RTWT agreement(s) is also a MAPC responding AP and responds by following the rules defined in 37.15.1.3 (MAPC agreement negotiation). Additionally, when the AP provides a response for a specific R-TWT schedule by setting the MAPC Operation Type field carried in the MAPC Scheme Request field associated with the specific R-TWT schedule to 5, the MAPC Request Parameter Set field containing the suggested parameters for this Co-RTWT agreement shall be included.

An AP that has established one or more MAPC agreements for Co-RTWT with a Co-RTWT requesting AP is a Co-RTWT coordinated AP.

Each Co-RTWT agreement is uniquely identified by the <broadcast TWT ID, MAC address> tuple, where the broadcast TWT ID is the value of the Broadcast TWT ID field (see 9.4.2.355.4.5 (Co-RTWT profile)) and is greater than 0 and the MAC address is the address of the Co-RTWT requesting AP.

37.15.2.4.3 Co-RTWT announcement rules

As part of extending protection for R-TWT schedule(s) of a Co-RTWT requesting AP, the Co-RTWT coordinated AP shall advertise the active R-TWT schedule(s) in its transmitted Beacon frames if the Co-RTWT coordinated AP has at least one associated STA that supports R-TWT.

NOTE—The Co-RTWT coordinated AP's associated STA(s) that support R-TWT follow the rules defined in 35.8.4.1 (TXOP and backoff procedure rules for R-TWT SPs) for the R-TWT schedule(s).

To advertise active R-TWT schedule(s) of a Co-RTWT requesting AP, the Co-RTWT coordinated AP shall announce R-TWT schedule(s) information by including Restricted TWT Parameter Set field(s) in the Broadcast TWT element defined in 9.4.2.198 (TWT element) and contained in transmitted Management frame(s) as specified in 26.8.3 (Broadcast TWT operation), 35.8 (Restricted TWT (R-TWT)), and by additionally following the rules defined in this subclause.

When a Co-RTWT coordinated AP advertises an active R-TWT schedule of a Co-RTWT requesting AP, the Co-RTWT coordinated AP shall include a Restricted Parameter Set field describing the R-TWT schedule in the Broadcast TWT element:

— With the Restricted TWT Schedule Info subfield set to 3, and
— With the Broadcast TWT ID subfield set to 31.

When a Co-RTWT coordinated AP in a co-hosted BSSID set advertises an active R-TWT schedule of a Co-RTWT requesting AP, then all the other APs in the same co-hosted BSSID set are Co-RTWT coordinated APs and shall advertise the same R-TWT schedule:

— With the Restricted TWT Schedule Info subfield set to 3, and
— With the Broadcast TWT ID subfield set to 31.

When a Co-RTWT coordinated AP advertises an active R-TWT schedule of a Co-RTWT requesting AP, the Co-RTWT coordinated AP shall set all the other parameters of the Restricted TWT Parameter Set field as follows:

— The TWT Wake Interval Exponent field, the TWT Wake Interval Mantissa field shall be set equal to the corresponding value of the R-TWT schedule of the Co-RTWT requesting AP,
— The Target Wake Time field and the four MSBs of the Nominal Minimum TWT Wake Duration/ Target Wake Time Extension field shall be set by following the rules defined in 35.8.3 (R-TWT announcement), where $TSF = TSF_{Ref}$ and TSF_{Ref} corresponds to the start time of the R-TWT sched-

Copyright © 2025 IEEE. All rights reserved.
This is an unapproved IEEE Standards Draft, subject to change.

uled for this Restricted TWT parameter set that will occur after the Co-RTWT coordinated AP has queued for transmission the frame that contains the TWT element. The value of TSF_{Ref} is obtained by converting the start time of the R-TWT schedule of the Co-RTWT requesting AP to the Co-RTWT coordinated AP's local TSF.

— The Broadcast TWT Persistence subfield for the R-TWT schedule shall be set to a value equal to the number of the Co-RTWT coordinated AP's TBTTs for which the R-TWT schedule of the Co-RTWT requesting AP is expected to be in existence, counting forward from the current Co-RTWT coordinated AP's TBTT. The value shall be determined by the Co-RTWT coordinated AP to include the TBTT immediately following the time at which the R-TWT schedule of the Co-RTWT requesting AP ceases to exist, that is obtained by the Broadcast TWT Persistence field of the most recent R-TWT schedule of the Co-RTWT requesting AP. The Co-RTWT coordinated AP may change the value of the Broadcast TWT Persistence subfield for any Broadcast TWT within any transmitted TWT element.

NOTE 1—A non-AP STA does not request to establish membership in an R-TWT schedule advertised by the R-TWT scheduling AP with the Restricted TWT Schedule Info subfield set to 3 (see 35.8.3.2 (Rules for R-TWT scheduled STA)).

NOTE 2—TSF synchronization between Co-RTWT requesting AP and Co-RTWT coordinated AP is out of the scope of this standard.

37.15.2.4.4 TXOP and backoff procedure rules for Co-RTWT

As part of extending protection for R-TWT schedule(s) of a Co-RTWT requesting AP, the Co-RTWT coordinated AP as a TXOP holder shall ensure that its TXOP, obtained on either the primary channel or NPCA primary channel, ends before the start time of any active R-TWT SP for which protection is extended. In either the following exceptional cases, the Co-RTWT coordinated AP may elect to continue its TXOP:

— the Co-RTWT coordinated AP performs PHYLEN NPCA (see 37.18 (Non-primary channel access (NPCA))) based on a PPDU transmitted by the Co-RTWT requesting AP or its associated non-AP STA and the PPDU length exceeds the start time of the R-TWT SP

— the Co-RTWT coordinated AP's TXOP obtained via the NPCA primary channel (see 37.18 (Non-primary channel access (NPCA))) occupies channel(s) that do not overlap with the BSS operating channel(s) of the Co-RTWT requesting AP.

In addition, before starting transmission of any PPDU in the TXOP obtained on either the primary channel or NPCA primary channel, the Co-RTWT coordinated AP as a TXOP holder shall check if there is enough time for the frame exchange to complete prior to the start of the R-TWT SP and, if there is not enough time, then the Co-RTWT coordinated AP shall defer transmission by selecting a random backoff count using the present CW[AC] (without advancing to the next value of CW[AC]). The QSRC[AC] for the MSDU or A-MSDU is not affected. In either the following exceptional cases, the Co-RTWT coordinated AP may elect to avoid deferring transmissions:

— the Co-RTWT coordinated AP performs PHYLEN NPCA (see 37.18 (Non-primary channel access (NPCA))) based on a PPDU transmitted by the Co-RTWT requesting AP or its associated non-AP STA and the PPDU length exceeds the start time of the R-TWT SP

— the Co-RTWT coordinated AP's TXOP obtained via the NPCA primary channel (see 37.18 (Non-primary channel access (NPCA))) occupies channel(s) that do not overlap with the BSS operating channel(s) of the Co-RTWT requesting AP.

Copyright © 2025 IEEE. All rights reserved.
This is an unapproved IEEE Standards Draft, subject to change.

37.15.2.5 Coordinated channel recommendation (Co-CR)

37.15.2.5.1 General

This subclause describes a mechanism for better recommendations on channel selection for P2P communication by enabling coordination among APs so that the set of channels recommended for P2P operation sent by those APs are the same or have some channels in common. The procedure is optional for an AP to support, and an AP that supports the procedure may reject a request from another AP to perform Co-CR.

A Co-CR requesting AP is an AP with dot11CoCROptionImplemented equal to true that requests another AP for coordination on channel recommendation to facilitate P2P communication.

A Co-CR responding AP is an AP with dot11CoCROptionImplemented equal to true that responds to the request for coordination from the Co-CR requesting AP.

The Co-CR negotiation(s) between two APs to establish Co-CR agreement(s) are performed by following the rules described in clause 37.15 (Multi-AP coordination (MAPC) framework) and 37.15.2.5.2 (Co-CR negotiations).

37.15.2.5.2 Co-CR negotiations

A Co-CR requesting or responding AP that intends to participate in Co-CR negotiation with another AP shall follow the rules described in 37.13.1.3 (MAPC agreement negotiation) with additional rules described in this subclause.

A Co-CR requesting AP shall include a Co-CR profile in a MAPC element carried in a transmitted individually addressed MAPC Negotiation Request frame. The Co-CR profile shall include one or more MAPC Scheme Request fields, where each Co-CR parameter set in the MAPC Scheme Request field describes a particular set of channel recommendation parameters. A successful Co-CR negotiation between a Co-CR requesting AP and a Co-CR responding AP corresponding to a Co-CR parameter set is uniquely identified by the tuple <Co-CR Agreement ID, MAC Address1, MAC Address2>, where the Co-CR Agreement ID is assigned by the Co-CR responding AP in the MAPC Negotiation Response frame that carries the Co-CR parameter set and the MAPC Operation Type field set to 3; MAC Address 1 is the MAC address of the Co-CR requesting AP, and MAC Address 2 is the MAC address of the Co-CR responding AP. To update or teardown a Co-CR agreement between a pair of APs, the Co-CR Agreement ID shall be used to identify the intended agreement between the two APs (see 37.13.1.3.3 (MAPC agreement update), 37.13.1.3.4 (MAPC agreement teardown)).

The Recommendation Periods Information field (if present) indicates a set of parameters that describe a series of time windows during which the channel recommendation indicated by the Operating Class and Channel field is valid. The absence of the Recommendation Periods Information field in the Co-CR Parameter Set field indicates that the corresponding Co-CR channel recommendation is valid at all time instances until the agreement is torn down.

The Recommendation Timeout field indicates the time until when the channel recommendation corresponding to Co-CR Parameter Set field is valid. The absence of this field in the Co-CR Parameter Set field indicates that the recommendation is valid until the agreement is torn down.

Upon a successful Co-CR agreement between a Co-CR requesting AP and a Co-CR responding AP, both APs, in their respective BSS, advertise the channel identified by the Operating Class and Channel field carried in the Co-CR parameter set corresponding to that Co-CR agreement, following the gratuitous channel usage procedure (see 11.21.15 (Channel Usage procedures)).

Copyright © 2025 IEEE. All rights reserved.
This is an unapproved IEEE Standards Draft, subject to change.

A UHR AP with dot11ExtendedChannelUsageOptionImplemented equal to true can include an Extended Channel Usage Element in its Beacon, Probe Response, and (Re) Association Response frame in order to advertise different sets of channels that can be deemed as conducive for peer-to-peer communication. Each recommended channel information can be included in a Channel Usage Parameter Set field of the Extended Channel Usage element. In the corresponding Channel Usage Parameter Set field, the AP can also include a Recommendation Periods Information field indicating a series of time windows during which the channel recommendation identified by this channel usage parameter set is applicable. In the corresponding Channel Usage Parameter Set field, the AP may also contain a Recommendation Timeout Information field indicating the time when the channel recommendation identified by this parameter set field expires. If the Recommendation Periods Information field is not present in the channel usage parameter set, then it means that the channel recommendation identified by this parameter set is applicable at all time (until the recommendation is ended). If the Recommendation Timeout Information field is not present in the channel usage parameter set, then it means that the channel recommendation identified by the parameter set is valid until the recommendation is ended (e.g., until the time when that channel usage parameter set fields are no longer carried in the extended channel usage element)

37.16 Seamless mobility domain (SMD) BSS transition(#9915)

37.16.1 General

SMD BSS transition is a mechanism for a non-AP MLD to transition from its current AP MLD to a target AP MLD without requiring reassociation. SMD BSS transition minimizes the time during which connectivity between the non-AP MLD and the DS is lost. The non-AP MLD remains in State 4 of association with a seamless mobility domain management entity (SMD-ME) during the SMD BSS transition while preserving the context for data transmission for a seamless experience. To support SMD BSS transition, an SMD is introduced in the IEEE 802.11 architecture. An(#12304) SMD consists of multiple AP MLDs, where a non-AP MLD can use the SMD BSS transition procedure to transition between the AP MLDs within the SMD. An SMD-ME provides authentication and association services at the SMD level(#12305) (see 11.3 (Authentication and association)), IEEE 802.1X Authenticator functions and RSNA key management functions for non-AP MLDs across all AP MLDs within the SMD.

NOTE 1—A non-AP MLD can use the same IP configuration (if any) in an SMD irrespective of which AP MLD in the SMD the non-AP MLD is connected to. A non-AP MLD is not expected to change its IP configuration only because it transitions to a different AP MLD in the same SMD.(#6373)

NOTE 2—All AP MLDs in the same SMD are in the same ESS interconnected by a common DS (see 4.3.5.2 (Extended service set (ESS): the large coverage network)). The same ESS and common DS ensures that roams within the ESS are transparent to layers above the MAC (see 4.3.5.2 (Extended service set (ESS): the large coverage network)), and therefore the same IP configuration can be used by the non-AP MLD.(#6373, Ed)

Two data path models between the non-AP MLD and the DS are supported by the SMD:

— Single(#12306) MAC SAP for the SMD.
— Separate MAC SAP per AP MLD of the SMD.

Only one of these data path models is used within an SMD.

In the case of a single MAC SAP for the SMD, the 802.1X Authenticator in the SMD-ME controls(#12308) the 802.1X Controlled Port for the non-AP MLD.(#4723)

In the case of a separate MAC SAP per AP MLD, the DS mapping is updated when the non-AP MLD transitions to another AP MLD within the SMD and the component of the 802.1X Authenticator in the SMD-ME interacts with an 802.1X Authenticator component in the AP MLD that controls(#12308) the 802.1X Controlled Port for the non-AP MLD.

Copyright © 2025 IEEE. All rights reserved.
This is an unapproved IEEE Standards Draft, subject to change.

The SMD and the 802.1X Authenticator component in the corresponding SMD-ME are uniquely identified by an SMD identifier (see 9.4.2.356 (SMD Information element)). The SMD identifier is used in establishing a single PMKSA and PTKSA for a non-AP MLD that associates with the SMD-ME.

If the SMD is part of an FT mobility domain, the single PMKSA to be used in the SMD is a PMK-R1 security association that is bound to the SMD-ME (through the SMD identifier (see 9.4.2.356 (SMD Information element)), when the non-AP MLD initially associates with the SMD-ME using FT initial MD association. A non-AP MLD can transition from one SMD to another SMD that is part of the same mobility domain using fast BSS transition.

A non-AP MLD performs initial association with the SMD-ME through an AP MLD within the SMD that establishes an SMD-level security association across all AP MLDs in the SMD. The non-AP MLD transitions between AP MLDs within the SMD while maintaining its association and security association with the SMD-ME.(#6378)

When a non-AP MLD is in the process of transitioning from its current AP MLD to a target AP MLD within the SMD, the same PMKSA and PTKSA created as part of RSNA security association established with the SMD-ME shall be used to protect the communications with its current AP MLD and the target AP MLD if the PTK mode is set to 0 (Per-SMD PTK mode).

If the PTK mode is set to 0 (Per-SMD PTK mode), the Per-SMD PTK is derived as defined in 37.16.5.3 (Per-SMD PTK key derivation) and the Per-SMD PTK is then used for cryptographic encapsulation for the non-AP MLD.

If the PTK mode is set to 1 (Per-AP MLD PTK mode), the Per-AP MLD PTK is derived as defined in 37.16.5.4 (Per-AP MLD PTK key derivation) and the Per-AP MLD PTK is then used for cryptographic encapsulation for the non-AP MLD.

SMD BSS transition includes the following procedures:

— SMD BSS transition discovery (see 37.16.2 (SMD BSS transition discovery procedure)).
— Initial association to the SMD-ME (see 37.16.3 (Association to the SMD-ME(#12354))).
— Target AP MLD selection recommendation (see 37.16.4 (Target AP MLD selection recommendation)).
— SMD BSS transition preparation (see 37.16.5 (SMD BSS transition preparation procedure)).
— SMD BSS transition execution.
  - Through current AP MLD (see 37.16.6 (SMD BSS transition execution procedure via the current AP MLD)).
  - Through target AP MLD (see 37.16.7 (SMD BSS transition execution procedure via the target AP MLD)).

37.16.2 SMD BSS transition discovery procedure

37.16.2.1 General

A non-AP MLD can use mechanisms such as active scanning (see 11.1.4.3.2 (Active scanning procedure for a non-DMG STA) and 35.3.4.2 (Use of multi-link probe request and response)), the BSS transition management framework (see 11.21.7 (BSS transition management) and 35.3.23 (BSS transition management for MLDs)) or the neighbor report framework (see 11.10.10 (Usage of the neighbor report)) for discovery of the neighboring AP MLDs and SMD BSS transition support by those AP MLDs.

NOTE 1—A neighboring AP MLD might or might not be part of the same SMD.

NOTE 2—A non-AP MLD can use the mechanisms defined in 37.16.2.2 (Obtaining received signal strength of the reported APs) to estimate the received signal strength between itself and an AP that it has discovered.

Copyright © 2025 IEEE. All rights reserved.
This is an unapproved IEEE Standards Draft, subject to change.

(#6923)An AP MLD that is part of(#7642) an SMD shall include the SMD Information element (see 9.4.2.356 (SMD Information element))(#6923) in the Beacon frames and Probe Response frames. The SMD Information element is provided as part of the Neighbor Report element in the BSS Transition Management Request frame and Neighbor Report Response frame(#9807) for a reported AP that is part of a different SMD than the reporting AP.

NOTE 3—An AP MLD might not be managed by an SMD if it is a standalone AP MLD. The presence of the SMD Information element in an AP's Beacon or Probe Response frames is an indication that the AP MLD the AP is affiliated with belongs to an SMD.(#12337)

A non-AP MLD may infer a reported AP's SMD affiliation based on fields carried in the TBTT Information field of the Reduced Neighbor Report element:

— If the Same SMD field is equal to 1, then the reported AP belongs to the same SMD as the reporting AP.
— If the reporting AP is the transmitted BSSID in a multiple BSSID set and the reported AP is a colocated(#5918) AP and the AP MLD ID for the reported AP is equal to the BSSID index of a nontransmitted BSSID in the same set, then the reported AP belongs to the same SMD as the AP corresponding to the nontransmitted BSSID.

NOTE 3—A non-AP MLD can use other discovery mechanisms described in this subclause to identify the SMD affiliation of a reported AP (if not already inferred) and/or to obtain attributes of a reported AP. A non-AP MLD can, based on the Short SSID field, determine the ESS and hence the SMD affiliation of a non-colocated(#5918) reported AP that does not belong to the same SMD as the reporting AP(#12128).

When a UHR AP sends a BTM Request frame, Neighbor Report Response frame, or ANQP response frame (that includes a Neighbor Report ANQP-element), to a UHR non-AP STA or to a broadcast address, then the included Neighbor Report elements shall include at least the following subelements, for each reported UHR AP.

— BSS load (if included in the Beacon frame of the reported AP).
— RSNE.
— RSNXE.
— UHR Operation.
— UHR Capabilities.
— Supported Rates and BSS Membership Selectors.
— Extended Supported Rates and BSS Membership Selectors.
— SMD Information element (if the reported AP is part of a different SMD).(#9568)

NOTE 4—The subelements listed above help a non-AP STA to efficiently prepare a list of suitable target AP MLDs to perform SMD BSS transition.

37.16.2.2 Obtaining received signal strength of the reported APs

A STA can estimate the DL signal strength for an AP that the STA has discovered by receiving any PPDU transmitted by the AP. It is recommended to estimate the DL signal strength on a PPDU that is transmitted with basic transmission rates, because PPDUs transmitted at higher rates are likely transmitted with lower transmission power.

(#12129)A STA can estimate the received signal strength of frames transmitted by the STA and received by the AP (UL received signal strength) by using the following parameters: the DL received signal strength, the STA's transmission power, and the Tx Power Indication element, the TX Power Indication subelement in a Neighbor Report element, or the AP Conducted Tx Power field of the Basic Multi-Link(#12130, 6101) element.

Copyright © 2025 IEEE. All rights reserved.
This is an unapproved IEEE Standards Draft, subject to change.

37.16.3 Association to the SMD-ME(#12354)

(#12131)A non-AP MLD shall infer that an AP MLD is managed by an SMD if a non-AP STA affiliated with the non-AP MLD receives a Beacon frame or a Probe Response frame from an AP affiliated with that AP MLD carrying the SMD Information element (see 37.16.2.1). When the AP MLD is managed by an SMD, the association and authentication initiated by a non-AP MLD are performed with the SMD-ME via the AP MLD and the Authentication and the Association Response frames sent by an AP affiliated with the AP MLD shall include the SMD Information element; otherwise, the association and authentication initiated by the non-AP MLD are performed with the AP MLD.

As part of performing authentication of a non-AP MLD with the SMD-ME, a single PMKSA shall be established between the non-AP MLD and the SMD-ME using the SMD identifier. The PMKSA includes an SMD-level PMK.

As part of (#12354)association of a non-AP MLD with the SMD-ME, an SMD-level PTKSA is derived between the non-AP MLD and the SMD-ME using the SMD identifier.

37.16.4 Target AP MLD selection recommendation

The current AP MLD may use the BSS transition management procedure (see 11.21.7 (BSS transition management) and 35.3.23 (BSS transition management for MLDs)) to recommend one or more candidate target AP MLDs within the same SMD (or a different neighboring SMD) to the non-AP MLD, as shown in Figure 37-6 (Candidate selection for target AP MLDs).

A non-AP MLD may send a BSS Transition Management Query frame (see 11.21.7.2 (BSS transition management query)) to its current AP MLD to request recommendation for candidate target AP MLDs. The current AP MLD shall respond with a BSS Transition Management Request frame. In addition, the current AP MLD may send an unsolicited BSS Transition Management Request frame (see (#7289)11.21.7.3 (BSS transition management request)) to the non-AP MLD to indicate its recommendation for candidate target AP MLDs for SMD BSS transition.

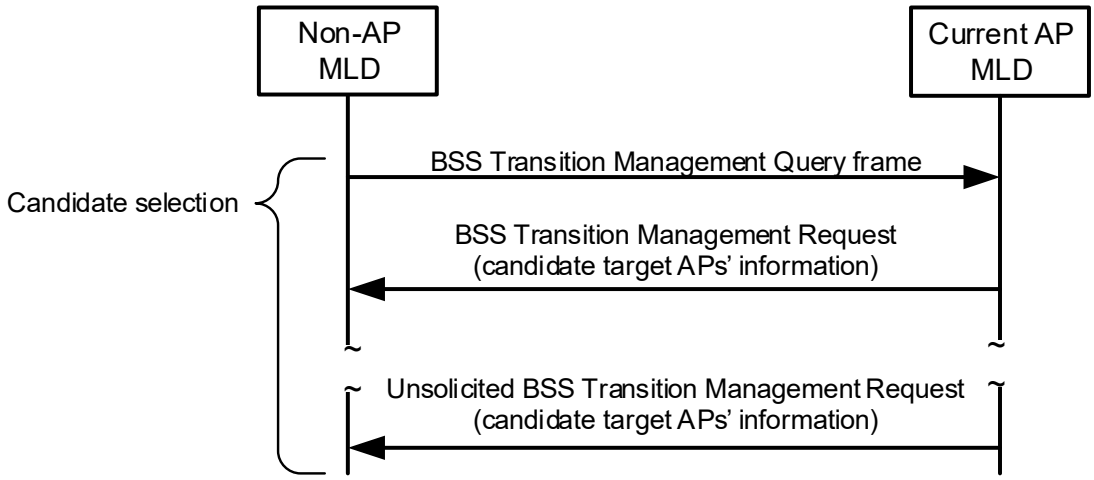

Figure 37-6—Candidate selection for target AP MLDs

Copyright © 2025 IEEE. All rights reserved.
This is an unapproved IEEE Standards Draft, subject to change.

37.16.5 SMD BSS transition preparation procedure

37.16.5.1 General

When a non-AP MLD uses SMD BSS transition to transition from its current AP MLD to a target AP MLD within an SMD, an SMD BSS transition preparation procedure as shown in Figure 37-7 (SMD BSS transition preparation and execution procedures) shall be performed before performing the SMD BSS transition execution procedure that is described in 37.16.6 (SMD BSS transition execution procedure via the current AP MLD) and 37.16.7 (SMD BSS transition execution procedure via the target AP MLD) to minimize the time during which connectivity between the non-AP MLD and the DS is lost. The SMD BSS transition preparation procedure consists of the following:

— Transfer of the context (see 37.16.8 (Context)) related to the non-AP MLD from its current AP MLD to the target AP MLD or the renegotiation of the context with the target AP MLD.

— Setting up the link(s) with the target AP MLD as described in 37.16.5.2 (Target links preparation).

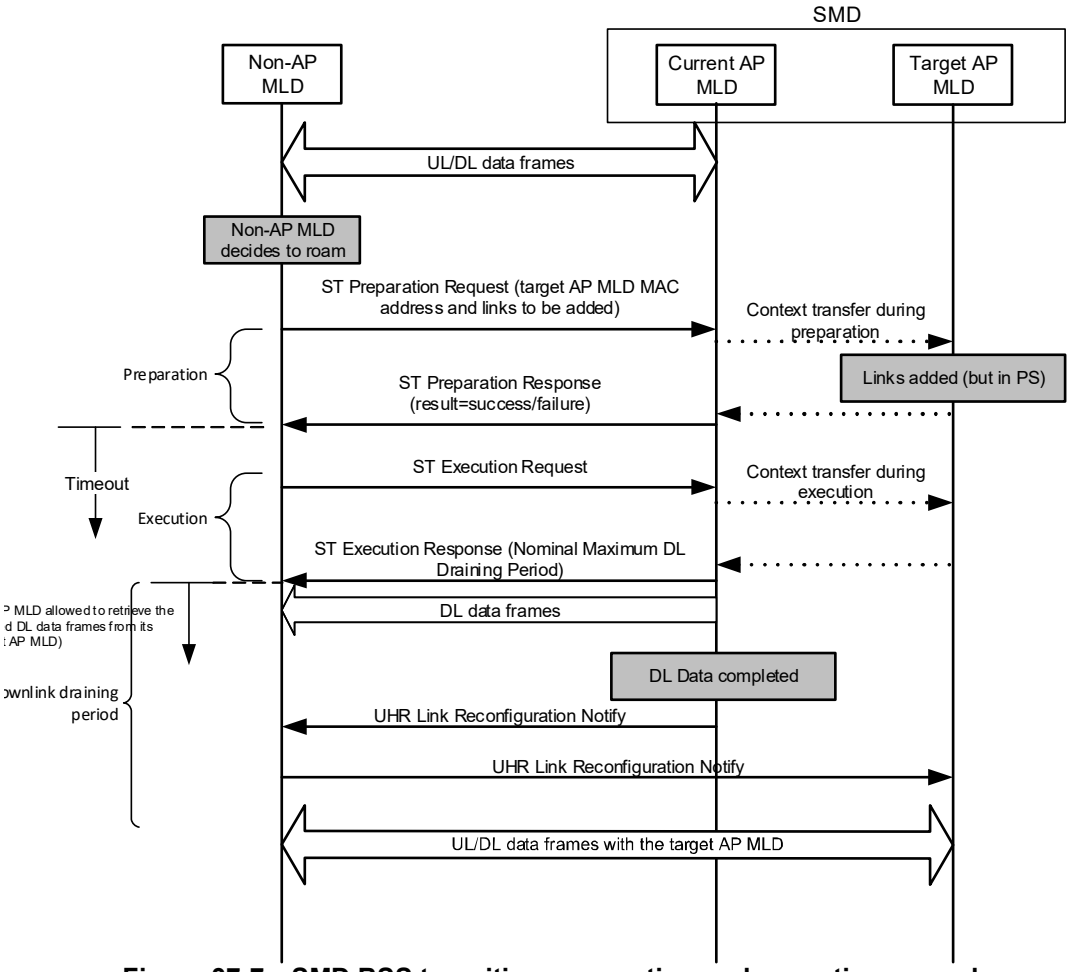

Figure 37-7—SMD BSS transition preparation and execution procedures

(#10009)(#5597)(#7272)(#6049)(#5640)(#5432)(#5434)(#6925)(#6936)(#12135)(#12136)(#12373)(#12374)(#6934)A non-AP MLD prepares one or more candidate target AP MLDs within an SMD by sending a separate ST preparation request for each candidate target AP MLD. If an(#6105)(#8220)(#12368) SMD BSS transition preparation was successful with one or more candidate target AP MLDs, then the non-AP MLD

Copyright © 2025 IEEE. All rights reserved.
This is an unapproved IEEE Standards Draft, subject to change.

shall attempt SMD BSS transition execution with only one of those target AP MLDs at a time. If the attempted SMD BSS transition execution fails, the non-AP MLD may attempt SMD BSS transition execution with another prepared AP MLD.

37.16.5.2 Target links preparation

When a non-AP MLD performs the SMD BSS transition preparation procedure to prepare a target AP MLD, the non-AP MLD shall send an ST preparation request to its current AP MLD.

The ST preparation request shall include the following:

— The Reconfiguration Multi-Link element containing:
  - (#6868)The MLD MAC Address field in the Common Info field, carrying the MLD MAC address of the non-AP MLD.
  - (#11967)The Target AP MLD MAC Address field in the Common Info field, carrying the MLD MAC address of the target AP MLD.
  - (#12143)The Per-STA Profile subelement for each affiliated non-AP STA that the non-AP MLD is requesting to set up with the target AP MLD in the Reconfiguration Multi-Link element (see 35.3.6.4 (Link reconfiguration to the setup links)). The Reconfiguration Operation Type field is set to 2.

— A list of SCS IDs, if the non-AP MLD requests that the target AP MLD prioritizes resource reservation for those SCS streams.

— A Diffie-Hellman Parameter element (see 9.4.2.312 (Diffie-Hellman Parameter element)) that contains the public key generated by the non-AP MLD if the Per-AP MLD PTK mode is used.

— A Nonce element (see 9.4.2.188 (Nonce element)) that contains the nonce generated by the non-AP MLD (SNonce) if the Per-AP MLD PTK mode is used.

The non-AP MLD shall indicate in the ST preparation request whether the non-AP MLD requests part of the context not to be transferred as described in 37.16.8 (Context).

After receiving the ST preparation request:

— If the target AP MLD accepts one or more links requested by the non-AP MLD in the ST preparation request:
  - The target AP MLD shall set up the accepted links(#6896) according to the procedures defined in 35.3.6.4 (Link reconfiguration to the setup links).
  - If a separate MAC SAP per AP MLD is used as described in 37.16.1 (General), the target AP MLD shall keep the IEEE 802.1X Controlled Port blocked so that general data traffic cannot pass directly between the non-AP MLD and the target AP MLD.
  - The context for the non-AP MLD shall be transferred from the current AP MLD to the target AP MLD per 37.16.8 (Context).
  - The current AP MLD shall transfer the SCS descriptors of all the currently established SCS of that non-AP MLD to the target AP MLD.
    - The target AP MLD may accept or reject an SCS stream (e.g. based on its resource availability) and indicate that to the current AP MLD.
  - The current AP MLD shall transfer the MSCS Descriptor of the established MSCS with the non-AP MLD.
    - The target AP MLD may accept or reject the MSCS (e.g. based on its resource availability) (#5985) and indicate that to the current AP MLD.
  - If the non-AP MLD requests that the target AP MLD prioritize(#5438) resource reservation for certain SCS streams by providing a list of SCS IDs, the target(#4198) AP MLD should consider applying the prioritization requested by the non-AP MLD amongst the SCS streams of the non-AP MLD when deciding whether to accept or reject an SCS.

Copyright © 2025 IEEE. All rights reserved.
This is an unapproved IEEE Standards Draft, subject to change.

- If the Per-AP MLD PTK mode is used, the target AP MLD shall derive a new PTK with the non-AP MLD.

— The current AP MLD shall send an ST preparation response to the non-AP MLD and the frame shall include the following:
  - A Status Code field in the ST(#4314)(#6032)(#7274) preparation response that is set to SUCCESS if at least one link has been accepted by the target AP MLD.
  - A Status Code field in the ST(#4314) preparation response that indicates the failure cause (see (#Ed)Table 9-92 (Status codes)) if none of the requested links(#7471) is accepted by the target AP MLD.
  - The status (Accept/Reject) of each requested link setup at the target AP MLD.
  - If the Status Code field in the ST(#4314) preparation response is SUCCESS, the frame shall include the following:
    - The AID assigned to the non-AP MLD by the target AP MLD
    - The BA Info Present field shall be set to 1 if there is at least one block ack agreement between the non-AP MLD and the current AP MLD.
    - A list of already established SCS streams that have been accepted by the target AP MLD.
    - An MSCS descriptor element using the same rules defined for this element when carried in a (re)Association Response frame (see 11.25.3 (MSCS procedures)).(#9582)(#12398)
    - A Diffie-Hellman Parameter element (see 9.4.2.312 (Diffie-Hellman Parameter element)) that contains the public key generated by the target AP MLD if the Per-AP MLD PTK mode is used.
    - A Nonce element (see 9.4.2.188 (Nonce element)) that contains the nonce generated by the target AP MLD (ANonce) if the Per-AP MLD PTK mode is used.

— Group keys shall not be included in the ST preparation response.

— (#6374, 8373, 6102)A Basic Multi-Link element shall be included if at least one link(#9583)(#4316) was accepted. When present, the Basic Multi-Link element carries one Per-STA Profile subelement containing the complete profile for each accepted link(#7473). The contents of the per-STA profile for each link are the same as those that would be present when the Basic Multi-Link element is carried in an Association Response frame except that no inheritance is applied and all the applicable elements and fields are included in the STA Profile field.

— If an ST execution request from the non-AP MLD requesting SMD BSS transition to a target AP MLD is not received by the current AP MLD or the target AP MLD within the timeout value indicated in the SMD Information element, the following shall be deleted:
  - The setup links at the target AP MLD.
  - The transferred context at the target AP MLD.
  - The newly derived PTK if the Per-AP MLD PTK mode is used.

When a non-AP MLD receives an ST preparation response from the current AP MLD indicating that the SMD BSS transition preparation was successfully completed with at least one setup link established at the target AP MLD:

— The Basic Multi-Link element in the ST preparation response shall be processed by the non-AP MLD according to the procedures defined in 35.3.6.4 (Link reconfiguration to the setup links).

— If the Per-AP MLD PTK mode is used, the non-AP MLD shall derive a new PTK with the target AP MLD.

— The non-AP MLD shall be in power save mode for all the setup links with the target AP MLD as specified in 35.3.6.4 (Link reconfiguration to the setup links).

— The non-AP MLD may initiate the SMD BSS transition execution procedure by sending an ST execution request requesting SMD BSS transition to the same prepared target AP MLD,(#4318) within the timeout value, either via the current AP MLD (see 37.16.6 (SMD BSS transition execution procedure via the current AP MLD)) or via the target AP MLD (see 37.16.7 (SMD BSS transition execution procedure via the target AP MLD)).

Copyright © 2025 IEEE. All rights reserved.
This is an unapproved IEEE Standards Draft, subject to change.

NOTE 1—The DS mapping update operation is not performed during the ST preparation procedure.

NOTE 2—The SCS streams that were not indicated as accepted in the ST preparation response are not set up at the target AP MLD.

NOTE 3—The Status Code field in the MSCS descriptor element might be REJECTED even if the Status Code field in the ST(#4314)(#5986)(#7275) preparation response is SUCCESS.

37.16.5.3 Per-SMD PTK key derivation

This subclause applies when the PTK mode is 0 (Per-SMD PTK).

If the (#12402)(#5989)Per-SMD PTK mode is used, a PTK is derived when the non-AP MLD performs initial association to the SMD-ME (see (#12354)37.16.3 (Association to the SMD-ME(#12354))). This key is derived from the PMK established with the SMD-ME, using the PTK derivation formula for the corresponding AKM with the following modifications:

— The SMD Identifier is added to the end of the context of the PTK derivation formula.

— The AA or BSSID is the MLD MAC(#5988) address of the AP MLD through which association to the SMD-ME occurs.

— The PTK is a Per-SMD PTK that is used to protect the link between the non-AP MLD and AP MLDs within the SMD. If this PTK is rekeyed, the same PTK derivation as described in the above paragraph is used.

37.16.5.4 Per-AP MLD PTK key derivation

This subclause applies when the PTK mode is 1 (Per-AP MLD PTK).

If the (#12402)Per-AP MLD PTK mode is used, a PTK and SMD_KDK are derived when the non-AP MLD performs initial association to the SMD-ME (see (#12354)37.16.3 (Association to the SMD-ME(#12354))). These keys are derived from the PMK established with the SMD-ME, using the PTK derivation formula for the corresponding AKM with the following modifications:

— The output of the PTK derivation formula is: PTK || SMD_KDK.

— The "Length" of the KDF in the PTK derivation formula is equal to PTK_bits + SMD_KDK_bits.

- PTK_bits is the length of the PTK.
- SMD_KDK_bits is the length of the SMD_KDK, which is equal to the length of the PMK.

— The SMD Identifier is added to the end of the context of the PTK derivation formula.

— The AA or BSSID is the MLD MAC(#5988) address of the AP MLD through which association to the SMD-ME occurs.

— The PTK is a Per-AP MLD PTK that is used to protect the link between the non-AP MLD and current AP MLD. If this PTK is rekeyed, the regular PTK derivation formula is used and an SMD_KDK is not rederived.(#5990)

The SMD_KDK is used to derive new Per-AP MLD PTKs when SMD BSS transition occurs; the lifetime of SMD_KDK is equal to the lifetime of the association with the SMD-ME.

If the SMD uses Per-AP MLD PTKs and an SMD BSS transition occurs, a new Per-AP MLD PTK is derived between the non-AP MLD and the target AP MLD using the PTK derivation formula for the corresponding AKM, with the following differences:

— If the PTK derivation formula does not include DHss in its context, DHss is added at the end of the context.

— The derivation key PMK is replaced by SMD_KDK.

— The AA or BSSID is the target AP MLD MAC address.

Copyright © 2025 IEEE. All rights reserved.
This is an unapproved IEEE Standards Draft, subject to change.

NOTE—While maintaining an association to the SMD-ME, if a non-AP MLD performs an SMD BSS transition to a target AP MLD, the existing SMD_KDK is used to derive the new per-AP MLD PTK.(#6147)

37.16.6 SMD BSS transition execution procedure via the current AP MLD

When a non-AP MLD uses SMD BSS transition to transition from its current AP MLD to a target AP MLD within an SMD through its current AP MLD, the non-AP MLD shall send an ST execution request to its current AP MLD. The Per-STA Profile subelement in the Reconfiguration Multi-Link element shall not be present in the ST execution request.

If the current AP MLD receives an ST execution request within the timeout value described in 37.16.5.2 (Target links preparation) and the target AP MLD has been prepared for SMD BSS transition for the non-AP MLD as described in 37.16.5 (SMD BSS transition preparation procedure), then:

— The current AP MLD shall transfer any context that is required per 37.16.8 (Context) and has not already been transferred to the target AP MLD (if any).

— If a separate MAC SAP per AP MLD is used as described in 37.16.1 (General), the target AP MLD may initiate the DS mapping update for the non-AP MLD and unblock the IEEE 802.1X Controlled Port for general data traffic to pass between the non-AP MLD and the target AP MLD.

— If the non-AP MLD had requested its current AP MLD not to transfer the next SN for existing DL block ack agreements of all TIDs (see 37.16.8 (Context)), the target AP MLD shall reset(#6730) the SN to 0 for all the DL TIDs and the non-AP MLD shall initialize *WinStartB*(#6111) to 0 for each DL TID with a block ack agreement, before DL traffic delivery from the target AP MLD to the non-AP MLD.

— If the non-AP MLD had requested its current AP MLD not to transfer the latest SN that has been passed up for existing UL block ack agreement of all TIDs (see 37.16.8 (Context)), the non-AP MLD shall re-set the SN to 0 for all the UL TIDs and the target AP MLD shall initialize *WinStartB*(#6111) to 0 for each UL TID with a block ack agreement, before UL traffic delivery from non-AP MLD to the target AP MLD.

— The current AP MLD shall send an ST execution response with the Status Code field in the SMD BSS Transition Parameters element set to SUCCESS to the non-AP MLD after the transfer of the context is completed (if any) (except the condition below when Status Code is set to REJECT_ST_EXEC)(#7251)(6314)(#5594)(#5595)(#6315)(#7252). The current AP MLD shall include the following in the ST execution response:

  - Nominal Maximum DL Draining Period Duration field.
  - Group keys of the successfully setup links at the target AP MLD.

— If the Per-AP MLD PTK mode is used, the target AP MLD shall not reset the PNs for either UL or DL. The PNs keep increasing monotonically when the non-AP MLD transitions to the target AP MLD even though the target AP MLD is using a new Per-AP MLD PTK for cryptographic encapsulation.

— If a separate MAC SAP per AP MLD is used as described in 37.16.1 (General) and the target AP MLD has not initiated the DS mapping update for the non-AP MLD, the target AP MLD shall initiate it for the non-AP MLD and unblock the IEEE 802.1X Controlled Port for general data traffic to pass between the non-AP MLD and the target AP MLD.

— The target AP MLD shall consider the SMD BSS transition execution procedure complete (i.e., the non-AP MLD has fully transitioned to the target AP MLD) if the non-AP MLD has indicated that the DL draining period has terminated.

NOTE 1—The necessary contents of the ST execution response (e.g. security parameters) might have been provided by the target AP MLD to the current AP MLD during the SMD BSS transition preparation procedure.

NOTE 2—The current AP MLD is expected to set the Nominal Maximum DL Draining Period Duration field to a value sufficiently large for the non-AP MLD to receive all the buffered data from the current AP MLD.

Copyright © 2025 IEEE. All rights reserved.
This is an unapproved IEEE Standards Draft, subject to change.

NOTE 3—The current AP MLD might transmit DL Data frames to the non-AP MLD in the interval between receiving the ST execution request and successful transmission of the ST execution response.(#7290)

If the current(#6042)(#6729)(#9812) AP MLD receives an ST execution request beyond the timeout value described in 37.16.5.2 (Target links preparation) or the target AP MLD has not been prepared for SMD BSS transition for the non-AP MLD as described in 37.16.5 (SMD BSS transition preparation procedure), the current(#9812)(#5992) AP MLD shall send an ST execution response to the non-AP MLD with the Status Code field set to REJECTED_ST_EXEC(#5596)(#6316)(#7253).

If the non-AP MLD receives an ST execution response frame with the Status Code field set to SUCCESS from the current(#6047) AP MLD for at least one link, the non-AP MLD shall remove all the setup links with its current AP MLD.

The non-AP MLD shall not transmit Class 3 frames to the target AP MLD until it has received the ST execution response with Status Code field set to SUCCESS from the current AP MLD for at least one link.

If the Per-AP MLD PTK mode is used, the non-AP MLD shall install the Per-AP MLD PTK as the PTK in use when it receives the ST execution response with status code(#5995) value set to SUCCESS from the target(#9634)(#5995)(#6550) AP MLD.

37.16.7 SMD BSS transition execution procedure via the target AP MLD

When a non-AP MLD uses SMD BSS transition to transition from its current AP MLD to a target AP MLD within an SMD through the target AP MLD, the non-AP MLD shall send an ST execution request to the target AP MLD.

The Per-STA Profile subelement in the Reconfiguration Multi-Link element shall not be present in the ST execution request.

After the non-AP MLD transmits the ST execution request to the target AP MLD on one of the setup links with the target AP MLD, the non-AP STA corresponding to that link shall remain in awake state while the other non-AP STAs corresponding to the setup links remain in doze state as described in 35.3.6.4 (Link reconfiguration to the setup links).

The ST execution request and ST execution response for SMD BSS transition execution shall be transmitted on the same link between the non-AP MLD and the target AP MLD.

If the target AP MLD receives an ST execution request within the timeout value directly from the non-AP MLD described in 37.16.5.2 (Target links preparation) and the target AP MLD has been prepared for SMD BSS transition for that non-AP MLD, then:

— The target AP MLD shall obtain the(#9633) context from the current AP MLD that is required per 37.16.8 (Context) and has not already been transferred to the target AP MLD (if any). The current AP MLD shall stop transmitting DL frames to the non-AP MLD.

— If a separate MAC SAP per AP MLD is used as described in 37.16.1 (General), the target AP MLD may initiate the DS mapping update for the non-AP MLD and unblock the IEEE 802.1X Controlled Port for general data traffic to pass between the non-AP MLD and the target AP MLD.

— If the non-AP MLD had requested its current AP MLD not to transfer the next SN for existing DL block ack agreement of all TIDs (see 37.16.8 (Context)), the target AP MLD shall reset(#6730) the SN to 0 for all the DL TIDs and the non-AP MLD shall initialize *WinStartB*(#6111) to 0 for each DL TID with a block ack agreement, before DL traffic delivery from the target AP MLD to the non-AP MLD.

— If the non-AP MLD had requested its current AP MLD not to transfer the latest SN that has been passed up for existing UL block ack agreement of all TIDs (see 37.16.8 (Context)), the non-AP MLD

Copyright © 2025 IEEE. All rights reserved.
This is an unapproved IEEE Standards Draft, subject to change.

shall re-set the SN to 0 for all the UL TIDs and the target AP MLD shall initialize *WinStartB* to 0 for each UL TID with a block ack agreement, before UL traffic delivery from non-AP MLD to the target AP MLD.

— The target AP MLD shall send an ST execution response to the non-AP MLD after the transfer of the context is completed (if any). The target AP MLD shall include the following in the ST execution response:
  - Group keys of the successfully setup links at the target AP MLD.

— If a separate MAC SAP per AP MLD is used as described in 37.16.1 (General) and the target AP MLD has not initiated the DS mapping update for the non-AP MLD, the target AP MLD shall initiate it for the non-AP MLD and unblock the IEEE 802.1X Controlled Port for general data traffic to pass between the non-AP MLD and the target AP MLD.

— If the Per-AP MLD PTK mode is used, the target AP MLD shall not reset the PNs for either UL or DL. The PNs keep increasing monotonically when the non-AP MLD transitions to the target AP MLD even though the target AP MLD is using a new Per-AP MLD PTK for cryptographic encapsulation.

— The target AP MLD shall consider the SMD BSS transition execution procedure complete (i.e., the non-AP MLD has fully transitioned to the target AP MLD) after successfully transmitting an ST execution response(#7280).

(#5993)If the target AP MLD receives an ST execution request beyond the timeout value described in 37.16.5.2 (Target links preparation) or the target AP MLD has not been prepared for SMD BSS transition for the non-AP MLD as described in 37.16.5 (SMD BSS transition preparation procedure), the target AP MLD shall send an ST execution response to the non-AP MLD with the Status Code field set to REJECTED_ST_EXEC.(#5596)(#6316)(#7253)

If the non-AP MLD receives an ST execution response frame with the Status Code field set to SUCCESS from the target AP MLD for at least one link, the non-AP MLD shall remove all the setup links with its current AP MLD.

The non-AP MLD shall not transmit Class 3 frames (other than the ST execution request to the target AP MLD) until it has received the ST execution response frame with the Status Code field set to SUCCESS from the target AP MLD for at least one link.

If the Per-AP MLD PTK mode is used, the non-AP MLD shall install the Per-AP MLD PTK as the PTK in use when it receives the ST execution response with status code(#5995) value set to SUCCESS from the current AP MLD.

37.16.8 Context

The following context can be transferred to the target AP MLD with the exceptions described in the next paragraph:

— The block ack parameters and block ack timeout value for any block ack agreement on each TID.

— The next SN to be assigned for DL individually addressed Data frames of each TID.

— The latest duplicate receiver cache for each TID without block ack agreement.

— The latest SN that has been passed up to the DS for each TID with UL block ack agreement.

— The starting PN to be assigned for DL individually addressed frames by the target AP MLD.

— The initial value to be used by each replay counter of the target AP MLD for UL individually addressed frame.

— *WinStartO* of each existing DL block ack agreement.

— Information of SCS Descriptor elements of established SCS streams with the current AP MLD.

Copyright © 2025 IEEE. All rights reserved.
This is an unapproved IEEE Standards Draft, subject to change.

— Information of MSCS Descriptor element of established MSCS and the corresponding UP{tuple} with the current AP MLD.

— The EPCS authorization information (included in the dot11InterworkingEntry) and the EPCS priority access state (enabled, torn down).

NOTE 1—The *WinStartO* of each existing DL block ack agreement ensures the target AP MLD does not exceed the reordering buffer window of the non-AP MLD.(#6110)

A non-AP MLD may request the following part of the context not to be transferred from its current AP MLD to the target AP MLD and the current AP MLD shall accept such a request:

— The next SN for existing DL block ack agreements.

— The latest SN that has been passed up for existing UL block ack agreements.

37.16.9 Downlink draining period

If the current AP MLD sends an ST execution response that indicates accepted status to a non-AP MLD in response to an ST execution request sent by the non-AP MLD, the current AP MLD may continue to transmit DL Data frames to the non-AP MLD for a period of time referred to as DL draining period starting after the reception of the acknowledgement of the ST execution response, and terminating after a nominal duration indicated by the Nominal Maximum DL Draining Period Duration field carried in the ST execution response. The non-AP MLD may terminate the DL draining period before the expiration of its nominal duration by following the rules defined in this subclause (see Figure 37-7 (SMD BSS transition preparation and execution procedures)). After termination of the DL draining period, the ST procedure is completed and the non-AP MLD and the current AP MLD shall remove all the setup links between them.

(#7290)When the non-AP MLD receives an ST execution response carrying a Nominal Maximum DL Draining Period Duration field with a value greater than 0, the non-AP MLD may choose to receive individually addressed DL Data frames from its current AP MLD during the DL draining period. Additionally, during the DL draining period:

— The non-AP MLD is not required to listen to any Beacon frames of the APs affiliated with the target AP MLD.

— The non-AP MLD shall send a UHR Link Reconfiguration Notify frame to the target AP MLD with the Type field set to 2 and the DL Draining Completed field set to 0 to indicate termination of the DL draining period (see 9.6.43.4 (UHR Link Reconfiguration Notify frame format)) before the expiration of its nominal duration, or when its nominal duration expires without any early termination.

— If the non-AP MLD has not received a UHR Link Reconfiguration Notify frame with the Type field set to 2 and the DL Draining Completed field set to 0 and the non-AP MLD terminates the DL draining period before the expiration of its nominal duration by following the rules defined in this subclause, the non-AP MLD should send a UHR Link Reconfiguration Notify frame (as an Action frame or as an Action No Ack frame) to the current AP MLD with the Type field set to 2 and the DL Draining Completed(#5872) field set to 0 to indicate termination of the DL draining period (see 9.6.43.4 (UHR Link Reconfiguration Notify frame format)).

— The current AP MLD shall support indicating to the non-AP MLD the termination of DL data transmissions for all TIDs (see 9.6.43.4 (UHR Link Reconfiguration Notify frame format)).

— The current AP MLD should send a UHR Link Reconfiguration Notify frame to the non-AP MLD with the Type field set to 2 and the DL Draining Completed field set to 0 (see 9.6.43.4 (UHR Link Reconfiguration Notify frame format)) when any of the following is true:

- The current AP MLD has no more pending DL data and is not expecting more DL data from the DS for DL transmissions during the DL draining period.
- The current AP MLD has transferred the next SN for DL as part of context to the target AP MLD and the current AP MLD has used the last SN available to the current AP MLD for all TIDs during the DL draining period.

Copyright © 2025 IEEE. All rights reserved.
This is an unapproved IEEE Standards Draft, subject to change.

— If the non-AP MLD had requested the current AP MLD to not transfer the next SN for DL individually addressed(#8913) Data frame for each TID by setting to one the Request DL SN Not Transferred field (see 9.4.2.357 (SMD BSS Transition Parameters element)) carried in the ST preparation request:
  - The target AP MLD shall not transmit DL Data frames to the non-AP MLD until receiving an indication(#6961) of termination of the DL draining period from the non-AP MLD.
  - After receiving an indication of termination of the DL draining period from the non-AP MLD, the target AP MLD is allowed to transmit DL frames to the non-AP MLD subject to the power(#7286) states of the affiliated STAs of the non-AP MLD.
  - The target AP MLD shall reset the SNs to 0 for all DL TIDs before starting transmissions of DL Data frames to the non-AP MLD.

— If the non-AP MLD had requested the current AP MLD to transfer the next SN for DL individually addressed Data frame for each TID by setting to zero the Request DL SN Not Transferred field (see 9.4.2.357 (SMD BSS Transition Parameters element)) carried in the ST preparation request:
  - The target AP MLD is allowed to transmit DL Data frames to the non-AP MLD subject to the power states of the affiliated STAs of the non-AP MLD. The target AP MLD shall assign SN for the DL individually addressed Data frames for each DL TID starting with the next SN values that were received during the context transfer.
  - The target AP MLD shall not transmit DL Data frames to the non-AP MLD with SN values above *WinStartO*(#7288)(#6116) + Buffer Size (of the current AP MLD) received during context transfer, unless the non-AP MLD has indicated termination of the DL draining period.
  - The target AP MLD shall not advance the DL buffer control for any TID unless the non-AP MLD has indicated termination of the DL draining period.

— If the current AP MLD had received an ST execution request that requested the AP MLD to indicate DL data completion for a subset of TIDs, the current AP MLD should send a UHR Link Reconfiguration Notify frame to the non-AP MLD with the Type field set to 2 and the Info Type field set to 1 (per-TID buffer status info), and a Per-TID field included for each TID that has a DL Block Ack agreement.

37.16.10 Downlink data(#7564) forwarding

As part of SMD BSS transition, the current AP MLD may forward DL data to the target AP MLD. (#6103)(#5996)(#6967)(#4178)(#6736)(#8325)The following information is allowed to be carried for MSDU/A-MSDU for each Data frame that is within *WinStartO* and *WinEndO* that needs retransmission and that is forwarded from the current AP MLD to the target AP MLD:

— TID

— SN

— PN

If downlink data forwarding is supported, the current AP MLD may forward downlink data for the non-AP MLD to the target AP MLD during the DL draining period (see 37.16.9 (Downlink draining period)).

NOTE—The same PN space is used by the current AP MLD and the target AP MLD.

37.17 Power management

37.17.1 Dynamic power save (DPS) operation

37.17.1.1 General

The DPS operation allows a DPS STA, i.e. a STA enabling its DPS mode, to operate with lower capabilities to reduce power consumption when listening on the link. The set of the capabilities reduced by DPS

Copyright © 2025 IEEE. All rights reserved.
This is an unapproved IEEE Standards Draft, subject to change.

operation include the bandwidth, NSS, MCS, and the PPDU formats. The DPS STA transitions to its HC mode upon receiving an appropriate ICF (see below) from a DPS assisting STA.

A non-AP UHR STA that has dot11UHRDPSAssistingImplemented equal to 1 is called a DPS assisting non-AP STA and shall set the DPS Assisting Support field to 1 in the UHR Capabilities element in Management frames that it transmits. A UHR AP that has dot11UHRDPSAssistingImplemented equal to 1 is called a DPS Assisting AP and shall set the DPS Assisting Support field to 1 in the UHR Capabilities element in Management frames that it transmits. Otherwise the UHR AP or non-AP STA shall set the DPS Assisting Support field to 0.

A DPS STA is either a DPS non-AP STA or a DPS mobile AP.

An AP that is not a UHR mobile AP shall have dot11UHRDPSImplemented equal to 0.

37.17.1.2 DPS operation for (#7565)non-AP STAs

A UHR non-AP STA that has dot11UHRDPSImplemented equal to 1 shall set the DPS Support field to 1 in the UHR Capabilities element in Management frames that it transmits. Otherwise the non-AP STA shall set the DPS Support field to 0. A non-AP UHR STA that has dot11UHRDPSImplemented equal to 1 and that has enabled its DPS mode is called a DPS non-AP STA.

When a non-AP STA that supports DPS mode (re)associates with an AP, DPS mode is disabled by default for the non-AP STA. A UHR non-AP STA that supports DPS mode and that intends to enable, disable or update the parameters(#9939) of DPS mode shall follow the procedure defined in 37.31 (Procedure for operating mode and parameter updates). In the UHR OMP request sent to enable or update the parameters of DPS mode for the non-AP STA, the non-AP STA shall include the DPS Operation Parameter field. The associated AP shall accept the request and follow the procedure defined in 37.31 (Procedure for operating mode and parameter updates).

NOTE—For a non-AP STA to enable DPS mode, the associated AP must be a DPS assisting AP (see 37.31 (Procedure for operating mode and parameter updates)).

DPS operation allows a DPS STA to operate in LC mode and to transition to HC mode upon reception of an ICF transmitted by its associated AP.

If at least one of the non-AP STA(s) addressed by a DPS assisting AP's ICF has indicated the non-zero padding delay to transition from LC mode to the HC mode:

— If none of the addressed non-AP STA(s) are operating with the DUO mode enabled, then the DPS assisting AP shall use an MU-RTS Trigger frame or a BSRP Trigger frame as the ICF to solicit the STA's transition from the LC mode to the HC mode,
— if one of the addressed non-AP STA is operating with the DUO mode enabled, then the DPS assisting AP shall use a BSRP Trigger frame or an individually addressed BSRP NTB Trigger frame as the ICF to solicit the STA's transition from the LC mode to the HC mode.

Otherwise, if none of the non-AP STA(s) addressed by a DPS assisting AP's ICF has indicated the non-zero padding delay to transition from LC mode to the HC mode:

— If none of the addressed non-AP STA(s) are operating with the DUO mode enabled, then the DPS assisting AP shall use one of the RTS (under the condition of single TXOP responder), the MU-RTS Trigger frame or the BSRP Trigger frame as the ICF to solicit the non-AP STA's transition from the LC mode to the HC mode,
— if one of the addressed non-AP STA is operating with the DUO mode enabled, then the DPS assisting AP shall use a BSRP Trigger frame or an individually addressed BSRP NTB Trigger frame as the ICF to solicit the STA's transition from the LC mode to the HC mode.

Copyright © 2025 IEEE. All rights reserved.
This is an unapproved IEEE Standards Draft, subject to change.

A DPS non-AP STA in the HC mode shall follow the EMLSR rule of switching back to listening mode to transition back to the LC mode.

A DPS STA that is in LC mode shall be capable of exchanging frames under one of the following modes indicated by the Parameterized Mode field in DPS Operation Parameters field in UHR Mode Change element:

— Default mode if the Parameterized Mode field is equal to 0: 20 MHz, 1 SS, non-HT PPDU format with the data rate of 6, 12, and 24 Mb/s.

— Parameterized mode if the Parameterized Mode field is equal to 1: PPDU formats up to UHR PPDU using the bandwidth, N_{SS}, and MCS announced by the non-AP STA in its DPS Operation Parameters field when enabling its DPS mode.

A DPS non-AP STA that is in the HC mode shall be capable of receiving and transmitting the same PPDUs as if the non-AP STA has not enabled DPS mode.

If a DPS non-AP STA has enabled DPS with the ICF Required field set to 0, then the DPS Assisting AP shall initiate frame exchanges with the DPS non-AP STA by sending an ICF if it intends to transmit to the DPS STA in HC mode (i.e. the DPS Assisting AP may exchange frames with the DPS non-AP STA without being required to send an ICF as long as the frames use parameters consistent with the DPS non-AP STAs' LC mode. A DPS non-AP STA shall not enable DPS with the ICF Required(#9939) field set to 0 if the DPS STA is operating on an eMLSR link.

If a DPS non-AP STA has enabled DPS with the ICF (#12558)Required field set to 1, then the DPS Assisting AP shall initiate any frame exchange with a DPS STA by sending an ICF (i.e., the DPS Assisting STA can not exchange any frames with the DPS STA unless they are preceded with an ICF).

The ICF frame addressed to the DPS STA(s) shall include an I-FCS if at least one of the recipient DPS STA(s) has indicated a nonzero DPS padding delay and shall include sufficient padding to ensure that the padding requirement(s) of the DPS STA(s) that are addressed by that ICF are satisfied as defined in 37.22 (Use and requirements of initial Control frames).

If a DPS assisting AP sends an ICF that is an MU-RTS Trigger frame to a DPS non-AP STA that can receive frame other than ICF in the LC mode, then the DPS assisting AP may set the Remain In LC Mode field to 1 in the User Info field of the MU-RTS Trigger frame addressed to the DPS non-AP STA. Otherwise, the DPS assisting AP shall set the Remain In LC Mode field the MU-RTS Trigger frame to 0.

If the Remain In LC Mode field of the MU-RTS Trigger frame is equal to 1, then the DPS assisting AP:

— shall ensure that all SU PPDUs transmitted to the DPS non-AP STA and RUs allocated to the DPS non-AP STA within MU PPDUs and TB PPDUs, that is initiated by the transmission of this frame, do not exceed the values of the LC mode parameters in the DPS operation parameters of the DPS non-AP STA in parameterized mode or the default mode parameters of the DPS non-AP STA in default mode.

— shall follow the procedure in this subclause and include the IFCS and padding in the MU-RTS Trigger frame if the DPS non-AP STA has enabled DPS with a nonzero DPS padding delay.

A DPS non-AP STA that receives an ICF that is an MU-RTS Trigger frame with the Remain In LC Mode equal to 1 from its associated DPS assisting AP may not switch to the HC mode after receiving the ICF. The DPS non-AP STA that receives an ICF that is an MU-RTS Trigger frame with the Remain In LC Mode equal to 0 from its associated DPS assisting AP shall switch to the HC mode after receiving the ICF.

Copyright © 2025 IEEE. All rights reserved.
This is an unapproved IEEE Standards Draft, subject to change.

37.17.2 Mobile AP's DPS operation

An DPS Mobile AP that intends to enable, disable or update the parameters of DPS mode shall follow the procedure defined in 37.32 (Enhanced BSS parameter critical update procedure(#12610)) to notify its associated DPS assisting non-AP STAs.

37.17.3 Multi-link power management

(#11779)An MLD that has dot11UHRMLPMOptionImplemented equal to true supports multi-link power management signaling, is called an MLPM MLD and shall set the Multi-Link Power Management Support field to 1 in the Extended MLD Capabilities And Operations subfield in the Basic Multi-Link element and the Reconfiguration Multi-Link element in Management frames that it transmits, otherwise it shall set the Multi-Link Power Management Support field to 0.

An MLPM non-AP MLD may transmit a frame to an associated AP MLD, via an affiliated non-AP STA, that (#10090)solicits an acknowledgement and that carries an MLPM Control subfield (#11780)(see 10.8 (HT Control field operation)) to indicate in the MLPM Link Bitmap field the power management mode of the non-AP STA(s) affiliated with the non-AP MLD and operating on enabled link(s), except that it shall not transmit such a frame if the AP MLD is not an MLPM AP MLD. The Power Management field of the Frame Control field of the frame shall be set to the same value as the bit (#6421)corresponding to the non-AP STA affiliated with the non-AP MLD that transmits the frame in the MLPM Link Bitmap field.

NOTE—The Power Management field of the Frame Control field of the frame is used to control the power management mode of the STA transmitting the frame.

A non-AP STA affiliated with an MLPM non-AP MLD for which a power management mode change has been indicated through MLPM Control subfield follows the rules defined in 11.2.3.2 (non-AP STA power management modes) for that changed power management mode and changes its power (#12558, 6421)management mode after the frame carrying the MLPM Control subfield is acknowledged by the AP that received the frame, as if the non-AP STA had received an acknowledgement from its associated AP.

NOTE 1—The non-AP MLD is expected to ensure that the power management indications that are transmitted across the links are consistent.

(#4540)NOTE 2—The non-AP STA affiliated with the non-AP MLD does not change its power management mode if a non-AP STA affiliated with the non-AP MLD has not received the acknowledgment for the frame carrying the MLPM Control field.

If an MLPM AP MLD receives and acknowledges, via an affiliated AP, a frame carrying an MLPM Control subfield that includes a power management mode change for a non-AP STA that is affiliated with an associated MLPM non-AP MLD and that is operating on an enabled link, then the affiliated AP that is operating on the corresponding enabled link follows the rules defined in 11.2.3.6 (AP operation) and 35.3.12 (ML power management) for the changed power management mode of the non-AP STA, as if the affiliated AP had received on the link a frame from the non-AP STA that indicates the same power (#12558)management change and had sent an acknowledgement frame in response, except that:

— (#4335)If the power management mode of an affected non-AP STA that is affiliated with a non-AP MLD is set to 1 in the MLPM Control field in a frame transmitted on another link by a non-AP STA affiliated with the same non-AP MLD, while the affected non-AP STA is considered by the AP operating on the same link to be in power save mode and in doze state at the time at which the frame is transmitted, the AP shall ignore the indication for the affected non-AP STA in the MLPM Control field and still consider the STA in doze state.

37.17.4 Intra-PPDU power save for non-AP UHR STAs

A non-AP UHR STA that operates in intra-PPDU power save mode shall follow the rules defined in 35.12 (Intra-PPDU power save for non-AP EHT STAs), with the following additions:

Copyright © 2025 IEEE. All rights reserved.
This is an unapproved IEEE Standards Draft, subject to change.

— The conditions that apply to an EHT MU PPDU shall also apply to a UHR MU PPDU, and
— The conditions that apply to an EHT TB PPDU shall also apply to a UHR TB PPDU.

A non-AP UHR STA that is in intra-PPDU power save mode may enter doze state or become unavailable until the end of a PPDU currently being received if all of the following conditions are met:

— the PPDU is a UHR MU PPDU where the RXVECTOR parameter UPLINK_FLAG is 0,
— the RXVECTOR parameter PPDU_TYPE is 1 or 2,
— the RXVECTOR parameter BSS_COLOR_2 is the BSS color of the BSS in which the STA is associated,
— the RXVECTOR parameters STA_ID do not include the identifier of the STA or the broadcast identifier(s) intended for the STA,
— and the BSS Color Disabled subfield is 0 in the most recently received HE Operation element from the AP with which it is associated.

37.18 Non-primary channel access (NPCA)

37.18.1 General

Non-Primary channel access allows STAs within a BSS to switch to an alternate channel during a period of time when OBSS activity is detected on part of the BSS operating channel.

A non-AP STA that supports NPCA operation is called an NPCA non-AP STA. An AP that supports NPCA operation is called an NPCA AP. An NPCA non-AP STA and NPCA AP shall set the NPCA (#12558)Supported field of the UHR MAC Capabilities Information field of the UHR Capabilities element to 1. A non-AP NPCA STA shall not enable the NPCA mode unless it is associated with an NPCA AP that has enabled NPCA operation.

An NPCA AP that has an operating bandwidth less than 80 MHz shall not enable NPCA operation. An AP of a multiple BSSID set that enables NPCA operation shall indicate the same NPCA primary channel, same NPCA minimum duration, same NPCA switching delay and same NPCA switch back delay as all of the other APs of the same multiple BSSID set that have enabled NPCA operation. An AP of a co-hosted BSS that enables NPCA operation shall indicate the same NPCA primary channel, same NPCA minimum duration, same NPCA switching delay and same NPCA switch back delay as all of the other APs of the same co-hosted BSSs that have enabled NPCA operation.

An NPCA AP that intends to enable, disable or update the parameters of NPCA mode shall follow the procedure defined in 37.32 (Enhanced BSS parameter critical update procedure(#12610))(#Ed) to notify its associated non-AP STAs.

An NPCA AP that has enabled NPCA operation shall set to 1, the NPCA Enabled field in the UHR (#12558)Operation element of the (Re)Association Response, UHR Link Reconfiguration Notify, Beacon and Probe Response frames that it transmits.

An NPCA AP with dot11HEPSROptionImplemented set to true shall set the TXVECTOR parameter SPATIAL_REUSE to PSR_DISALLOW for PPDUs that it transmits, and shall set the PSR Disallowed subfield in the SR Control field of the Spatial Reuse Parameter Set element to 1 in Management frames it transmits before enabling NPCA operation in its BSS and while NPCA operation remains enabled.

An AP enables PHYLEN NPCA operation by setting the MOPLEN NPCA field to 0 and enables both PHYLEN NPCA and MOPLEN NPCA operation by setting the MOPLEN NPCA field to 1.

Copyright © 2025 IEEE. All rights reserved.
This is an unapproved IEEE Standards Draft, subject to change.

An NPCA AP may advertise an NPCA Disabled Subchannel Bitmap field in the NPCA Operation Parameters field that indicates the subchannels that are punctured when an NPCA STA operates on the NPCA primary channel:

— If an NPCA Disabled Subchannel Bitmap field is present, then the NPCA Disabled Subchannel Bitmap Field Present bit shall be set to 1, otherwise the NPCA Disabled Subchannel Bitmap Field Present field shall be set to 0.

— The NPCA Disabled Subchannel Bitmap field value shall satisfy the following requirements:

  - The puncturing pattern indicated by the value of the NPCA Disabled Subchannel Bitmap field is a valid non-OFDMA puncturing pattern as defined in 36.3.12.11.3 (Preamble puncturing for EHT MU PPDUs in a non-OFDMA transmission)
  - A 20 MHz subchannel indicated as punctured in the Disabled Subchannel Bitmap field of the EHT Operation element (if any) is also indicated as punctured in the NPCA Disabled Subchannel Bitmap field.

— An NPCA AP may indicate one or more 20 MHz subchannels as punctured in the NPCA Disabled Subchannel Bitmap field of the EHT Operation Element for the purpose of maximizing the BW of the NPCA operating channel

— An NPCA AP may indicate one or more 20 MHz subchannels as punctured in the NPCA Disabled Subchannel Bitmap field of the EHT Operation Element for the purpose of creating a gap between the PPDU that initiated the NPCA switch and the NPCA operating channel

— If no NPCA Disabled Subchannel Bitmap field is present in the NPCA Operation Parameters field transmitted by the AP that the STA is associated with, then the subchannels are punctured during NPCA operation as indicated in 35.15.2 (Preamble puncturing operation).

An NPCA AP shall indicate a value in the NPCA Primary Channel field of transmitted NPCA Operation Parameters fields that corresponds to a channel that is located within the secondary 40 MHz of the BSS operating channel if the BSS is an 80 MHz BSS, that corresponds to a channel that is located within the secondary 80 MHz of the BSS operating channel if the BSS is a 160 MHz BSS and that corresponds to a channel that is located within the secondary 160 MHz of the BSS operating channel if the BSS is a 320 MHz BSS.

A non-AP NPCA STA shall indicate its NPCA switching delay and NPCA switch back delay respectively in the NPCA Switching Delay field and NPCA Switch Back Delay fields of the OMP Request frames.

When a non-AP STA that supports NPCA mode (re)associates with an AP, the NPCA mode is disabled by default for the non-AP STA. A UHR non-AP STA that supports NPCA mode and that intends to enable, disable or update the parameters of NPCA mode shall follow the procedure defined in 37.31 (Procedure for operating mode and parameter updates). In the UHR OMP request sent to enable or update the parameters of NPCA mode for the non-AP STA, the non-AP STA shall include the following in the Mode Parameters field of the Mode Tuple field:

— NPCA switching delay,

— NPCA switch back delay.

The associated AP shall accept the request and follow the procedure defined in 37.31 (Procedure for operating mode and parameter updates).

NOTE—For a non-AP STA to enable NPCA mode, the associated AP must support NPCA and must have NPCA enabled for the BSS (see 37.31 (Procedure for operating mode and parameter updates)).

37.18.2 MU EDCA interaction with NPCA

If an NPCA AP that has enabled NPCA operation advertises MU EDCA parameters in the Beacon frames that it transmits, the MU EDCA protocol (see 26.2.7 (EDCA operation using MU EDCA parameters)) shall apply jointly on both BSS primary channel and NPCA primary channel for a non-AP NPCA STA. An NPCA

Copyright © 2025 IEEE. All rights reserved.
This is an unapproved IEEE Standards Draft, subject to change.

STA shall follow the MU EDCA procedure in 26.2.7 (EDCA operation using MU EDCA parameters). In addition, an NPCA STA shall:

— Maintain a single MU EDCA timer that is shared across the BSS primary channel and the NPCA primary channel

— Transition from using EDCA parameters to using MU EDCA parameters (and vice-versa) at the same time on both the BSS primary channel and the NPCA primary channel based on conditions described in 26.2.7 (EDCA operation using MU EDCA parameters) that occur on either the BSS primary channel or the NPCA primary channel, and

— When the STA is operating on the NPCA primary channel, use the same MU EDCA parameters as are used on the BSS primary channel (dot11MUEDCATable) except that AIFSN[AC] shall be set to 0 for all ACs. When the STA switches back to the BSS primary channel, it reverts to using the AIFSN[AC] values from the dot11MUEDCATable.

37.18.3 Switching to the NPCA channel

An NPCA STA shall not switch to the NPCA primary channel for NPCA operation if NPCA mode has not been enabled by its associated AP according to the procedure described in 37.32 (Enhanced BSS parameter critical update procedure(#12610)).

An NPCA STA may switch to the NPCA primary channel for NPCA operation if the NPCA mode has been enabled for the BSS of which it is a member and either condition 1) or 2) is met:

1) the STA received a PPDU and/or received a PHY-RXSTART.indication primitive for an HE/EHT/UHR PPDU on the BSS primary channel and all of the following conditions are true:
   a. Condition 2) is not true.
   b. the PPDU is classified by the STA as an inter-BSS PPDU following the procedure defined in 37.5 (Intra-BSS and inter-BSS PPDU classification for UHR STA).
   c. At least one of the following conditions is true:
      i) The value of the MAC variable NPCA_PPDU_REM_DUR derived from the received PPDU is greater than the value indicated in the most recently received or transmitted NPCA Minimum Duration Threshold field corresponding to the BSS of which the STA is a member.
      ii) If the NPCA AP corresponding to the BSS of which the STA is a member has enabled MOPLEN NPCA in addition to PHYLEN NPCA and the value of the MAC variable NPCA_PHY_TXOP_REM_DUR derived from the received PPDU is greater than the value indicated in the most recently received or transmitted NPCA Minimum Duration Threshold field corresponding to the BSS of which the STA is a member.
   d. The bandwidth of the PPDU is determined by the STA to be 20, 40, 80, 160 or 320 MHz, based on the Bandwidth field in the PHY preamble of the PPDU, and the channel occupied by the PPDU does not overlap with the NPCA primary channel.
   e. If the STA maintains an intra-BSS NAV, it is zero.
2) All of the following conditions are true:
   a. A sequence of three PPDUs, separated by aSIFSTime, is identified on the BSS primary channel, comprising an initial Control frame, an initial Response frame and a third PPDU following the initial Response frame, where the presence of the initial Response frame may be inferred.
   b. The STA received at least the first PPDU containing the initial Control frame and the PHY-RXSTART.indication and/or the PHY-RXEARLYSIG.indication of the third PPDU.

Copyright © 2025 IEEE. All rights reserved.
This is an unapproved IEEE Standards Draft, subject to change.

c. An indication that a valid TXOP was obtained on the BSS primary channel, as verified by the receipt of a PHY-RXEARLYSIG.indication or PHYRXSTART.indication primitive corresponding to the third PPDU that occurs during a time window that:
   i) begins at aSIFSTime + ICR_Timeout after the MAC receives a PHY-RXEND.indication primitive corresponding to the first PPDU, where ICR_Timeout is equal to:
      1) the length (in usec) of the expected CTS if the initial Control frame is an RTS or an MU-RTS Trigger frame,
      2) the value of RXTIME calculated using Equation (27-147) with the value of LENGTH replaced by the value from the UL Length field of the Common Info field, if the initial Control frame is a BSRP Trigger frame or a BSRP NTB Trigger frame
   iii) has a duration that is equal to NPCA_START_TIMEOUT which is aSIFSTime + (2 x aSlotTime) + aRxPHYStartDelay
d. At least one of the three PPDUs in the sequence of PPDUs is classified by the STA as an inter-BSS PPDU following the procedure defined in 37.5 (Intra-BSS and inter-BSS PPDU classification for UHR STA).
e. At least one of the following conditions is true:
   i) The NPCA AP corresponding to the BSS of which the STA is a member has enabled PHYLEN NPCA only and the value of the MAC variable NPCA_PPDU_REM_DUR derived from the received third PPDU of the sequence of PPDUs is greater than the value indicated in the most recently received or transmitted NPCA Minimum Duration Threshold field corresponding to its BSS
   ii) If the NPCA AP corresponding to the BSS of which the STA is a member has enabled MOPLEN NPCA in addition to PHYLEN NPCA and the value of the MAC variable NPCA_CFRAME_TXOP_REM_DUR derived from the received first PPDU (containing the initial Control frame of the control frame exchange) of the sequence of PPDUs is greater than the value indicated in the most recently received or transmitted NPCA Minimum Duration Threshold field corresponding to its associated BSS
f. The bandwidth of the third PPDU is determined by the STA to be 20, 40, 80, 160 or 320 MHz based on the Bandwidth field in the PHY preamble of the PPDU not overlap with the NPCA primary channel and the channel occupied by the PPDU does not overlap with the NPCA primary channel.
g. If the STA maintains an intra-BSS NAV, it is zero at the time of the receipt of the PHY-RXSTART.indication and/or the PHY-RXEARLYSIG.indication of the first PPDU.

When a PHY-CCA.indication(BUSY) primitive corresponding to the start of the reception of a PPDU is indicated at an NPCA STA while operating on the BSS primary channel, the values of the MAC variables NPCA_PPDU_REM_DUR, NPCA_PHY_TXOP_REM_DUR and NPCA_TIMER are all set to 0. When a PHY-CCA.indication(BUSY) corresponding to the start of the reception of a PPDU containing an initial Control frame is indicated at an NPCA STA while operating on the BSS primary channel, the MAC variable NPCA_CFRAME_TXOP_REM_DUR is set to 0.

The MAC variable NPCA_PPDU_REM_DUR derived from a received PPDU is equal to the value in microseconds, of the remaining duration of the received PPDU, determined by the MAC at the time of the receipt of the PHY-RXSTART.indication primitive associated with the received PPDU, by subtracting the time elapsed between the reception of the PHY-CCA.indication(BUSY) and PHY-RXSTART.indication primitives associated with the received PPDU from the value of RXTIME of the received PPDU.

The MAC variable NPCA_PHY_TXOP_REM_DUR derived from a received PPDU is:

— Set to 0, if the RXVECTOR parameter TXOP_DURATION is UNSPECIFIED, or if the NPCA AP corresponding to the BSS of which the STA is a member has not enabled MOPLEN NPCA.

Copyright © 2025 IEEE. All rights reserved.
This is an unapproved IEEE Standards Draft, subject to change.

— Otherwise, it is set to the value in usec, of the remaining duration of the PPDU, determined by the MAC at the time of the receipt of the PHY-RXSTART.indication primitive associated with the received PPDU, by subtracting the time elapsed between the reception of the PHY-CCA.indication(BUSY) and PHY-RXSTART.indication primitives associated with the received PPDU from the value of RXTIME corresponding to the received PPDU, plus the value of the TXOP_DURATION parameter of the RXVECTOR of the PPDU.

The MAC variable NPCA_CFRAME_TXOP_REM_DUR derived from a received PPDU is:

— Set to 0, if the NPCA AP corresponding to the BSS of which the STA is a member has not enabled MOPLEN NPCA

— Otherwise, it is set to the value in the Duration/ID field of the initial Control frame in the received PPDU at the receipt of the PHY-RXEND.indication primitive of the PPDU that contained the frame. The value of NPCA_CFRAME_TXOP_REM_DUR is reduced by the amount of time elapsed between the PHY-RXEND.indication primitive of the initial Control frame from which the value of NPCA_CFRAME_TXOP_REM_DUR was determined and the PHY-RXSTART.indication primitive of the third PPDU of the frame exchange sequence identified in condition 2) above at the time of the receipt of the PHY-RXSTART.indication primitive of the third PPDU.

37.18.4 NPCA transmission rules

When an NPCA STA switches to the NPCA primary channel for NPCA operation, then the following rules apply:

1) If the STA switches from the BSS primary channel to the NPCA primary channel based on meeting condition 1) of 37.18.3 (Switching to the NPCA channel), the STA shall initiate the switch at the NPCA HE switch time and it shall be ready to transmit and receive frames (subject to its capabilities and operating mode) on the NPCA primary channel no later than the value of its most recently indicated NPCA switching delay after the NPCA HE switch time. The NPCA HE switch time is the point in time immediately after the reception of the HE-SIG-A/U-SIG field of the received PPDU in condition 1) of 37.18.3 (Switching to the NPCA channel).

2) If the STA switches from the BSS primary channel to the NPCA primary channel based on meeting condition 2) of 37.18.3 (Switching to the NPCA channel), the STA shall initiate the switch at the NPCA NHT switch time and it shall be ready to transmit and receive frames addressed to it (subject to its capabilities and operating mode) on the NPCA primary channel no later than the value of its most recently indicated NPCA switching delay after the NPCA NHT switch time. The NPCA NHT switch time is equal to the point in time that is 3 × TSYM (as defined in Table 17-5 - Timing related parameters, in the column labeled "Value (20 MHz channel spacing)") after the reception of the L-SIG field of the third PPDU of the received sequence of PPDUs from condition 2) of 37.18.3 (Switching to the NPCA channel).

3) The STA shall use the same EDCA parameter set and EPCS EDCA parameter set values for operation on the NPCA primary channel as it uses on the BSS primary channel. See 37.18.2 (MU EDCA interaction with NPCA) for MU EDCA parameters.

4) At each NPCA HE switch time or NPCA NHT switch time, as appropriate, if either the STA is a non-AP STA and transmission of frames that are not a response to a Trigger frame is not disabled by the MU EDCA protocol (See 26.2.7 (EDCA operation using MU EDCA parameters)) or the STA is an AP, the STA may initiate a TXOP on the NPCA primary channel by following the rules defined in 10.23.2.2 (EDCA backoff procedure) and 10.23.2.4 (Obtaining an EDCA TXOP) with the following exceptions:

   a. Each time that the STA switches to the NPCA primary channel, the STA shall

      i) If condition 1) from 37.18.3 (Switching to the NPCA channel) is met, set NPCA_CFRAME_TXOP_REM_DUR to 0, set NPCA_TIMER to the largest non-zero value of the variables NPCA_PPDU_REM_DUR, NPCA_PHY_TXOP_REM_DUR and

Copyright © 2025 IEEE. All rights reserved.
This is an unapproved IEEE Standards Draft, subject to change.

NPCA_CFRAME_TXOP_REM_DUR, minus the switch back delay that the STA has indicated in the most recently transmitted NPCA Operation Parameters field.

ii) Store the current values of the variables QSRC[AC], CW[AC] and the backoff counter for each EDCAF.

iii) Set QSRC[AC] for each AC to the value of the Initial NPCA QSRC field of the NPCA Operation Parameters received from its associated NPCA AP or that it transmitted.

iv) Initialize variables CW[AC] to $2^{\text{Init_QSRC_NPCA}} \times (\text{CWmin[AC]} + 1) - 1$.

v) Invoke the backoff procedure even if the medium for the NPCA primary channel is not busy.

vi) Initiate countdown of the MAC variable NPCA_TIMER in units of 1 µs

5) A first STA shall not initiate a transmission on the NPCA primary channel to a second STA until the second STA's NPCA switching delay time has elapsed since the NPCA HE switch time at the first STA if the first STA is switching due to condition 1) above or since the NPCA NHT switch time at the first STA if the first STA is switching due to condition 2) above.

6) The STA shall begin all frame exchanges on the NPCA primary channel with an ICF using non-HT PPDU or non-HT duplicate PPDU format using a rate of 6 Mb/s, 12 Mb/s, or 24 Mb/s.

a. For TXOPs initiated by an AP, the initial Control frame (ICF) shall be a BSRP Trigger frame or an MU-RTS Trigger frame except when at least one of the target non-AP STA(s) is operating in the DUO mode, in which case, the ICF) may be a BSRP Trigger frame or a BSRP NTB Trigger frame but not an MU-RTS. In addition:

i) The ICF shall conform to the rules in 37.19.2 (Dynamic (#7566)unavailability operation (DUO) mode) if at least one of the target non-AP STA(s) is operating in DUO mode.

ii) The ICF shall conform to the rules in 37.21 (Enhanced multi-link single-radio (EMLSR) operation for a UHR non-AP MLD) if at least one of the target non-AP STA(s) is affiliated with a non-AP MLD that is operating in EMLSR mode.

iii) The ICF shall conform to the rules in 37.17.1 (Dynamic power save (DPS) operation)if at least one of the target non-AP STA(s) is operating in DPS mode.

b. For TXOPs initiated by a non-AP STA, the initial control frame shall be a BSRP NTB Trigger frame, except that if the non-AP STA is operating in the Dynamic Unavailability Operation mode (DUO), then the ICF shall conform to the rules found in 37.19.2 (Dynamic (#7566)unavailability operation (DUO) mode).

7) An NPCA AP that transmits a Trigger frame on the NPCA primary channel shall indicate RU index values that use the NPCA primary channel as the reference primary channel.

8) An NPCA STA that transmits a Trigger frame on the NPCA primary channel shall set the NPCA Primary Indication field to 1 in the Special User Info field, otherwise, this field is set to 0.

9) The 20 MHz channels occupied by PPDUs transmitted by the STA shall meet all of the following conditions:

a. include at least the NPCA primary channel.

b. all be within the BSS bandwidth.

c. not include any of the channels occupied by either the PPDU of condition 1) of 37.18.3 (Switching to the NPCA channel) or by the third PPDU of condition 2) of 37.18.3 (Switching to the NPCA channel), whichever caused the STA to switch from the BSS primary channel to the NPCA primary channel.

d. not include channels that are indicated as punctured in the Disabled Subchannel Bitmap field in the EHT Operation element or in the NPCA Disabled Subchannel Bitmap field in the UHR Operation element with the following rules:

Copyright © 2025 IEEE. All rights reserved.
This is an unapproved IEEE Standards Draft, subject to change.

i) If the associated NPCA AP advertises an NPCA Disabled Subchannel Bitmap field, the STA shall follow the rules in 35.15.2 (Preamble puncturing operation) except that instead of the Disabled Subchannel Bitmap field it shall use the most recently exchanged NPCA Disabled Subchannel Bitmap field.

ii) If the associated NPCA AP does not transmit an NPCA Disabled Subchannel Bitmap field, the STA shall follow the rules in 35.15.2 (Preamble puncturing operation).

10) UHR ELR PPDUs, HE ER SU PPDUs, EHT MCS14/15 shall not be transmitted on the NPCA primary channel.

11) Dynamic Subband Operation (see 37.26 (Dynamic subband operation (DSO)(#7567))) shall not be used on the NPCA primary channel.

12) If TBTT for the BSS occurs while an NPCA AP is operating on the NPCA primary channel, the scheduling of the transmission of the Beacon frame and following group addressed frames shall be deferred until immediately after the AP switches back to the BSS primary channel.

NOTE—The AP and associated STAs are not required to switch back to the BSS primary channel at TBTT. The group addressed frames will be buffered and delivered immediately following the next DTIM Beacon, unless explicitly specified otherwise.

NOTE—Exponential backoff applies on the NPCA primary channel when there are failed transmissions.

37.18.5 Switching back from the NPCA channel

An NPCA STA shall switch back to the BSS primary channel when the NPCA_TIMER expires.

When the STA switches back to the BSS primary channel, it shall:

1) replace the current values of the variables QSRC[AC], CW[AC] and the backoff counter for each EDCAF with the values that it stored when it switched to the NPCA primary channel.

2) resume the backoff procedure.

37.19 Unavailability reporting and parameter updates

37.19.1 General

The unavailability reporting and parameter updates subclause describes a set of mechanisms that allow a STA to inform a peer STA of its unavailabilities and/or its adaptive operation parameters. Subclause 37.19.2 (Dynamic (#7566)unavailability operation (DUO) mode) describes how a non-AP STA can indicate unavailability using certain Control frames, where the unavailability duration might overlap with the ongoing TXOP. Subclause 37.19.3 (Non-AP STA periodic unavailability operation (PUO) mode) describes how a non-AP STA can inform its associated AP about periodic service periods where the non-AP STA will be unavailable. Subclause 37.19.4 (AP PUO mode) describes how and under which conditions an AP can operate its BSS with periodic service period(s) during which the AP will be unavailable. Finally, Subclause 37.19.5 (Adaptive operation mode) describes a mode of operation that allows a non-AP STA to adapt its operation parameters when experiencing in-device coexistence issues.

37.19.2 Dynamic (#7566)unavailability operation (DUO) mode

A non-AP STA that has dot11DUOOptionImplemented equal to true supports DUO, is called a DUO non-AP STA and shall set the DUO Support field of the UHR MAC Capabilities Information field of the UHR Capabilities element to 1. An AP that has dot11DUOAssistingOptionImplemented equal to true supports DUO, is called a DUO assisting AP and shall set the DUO Support field of the UHR MAC Capabilities Information field of the UHR Capabilities element to 1.

When a DUO non-AP STA (re)associates with an AP, DUO mode is disabled by default for the DUO non-AP STA. A DUO non-AP STA that intends to enable or disable DUO mode shall follow the procedure

Copyright © 2025 IEEE. All rights reserved.
This is an unapproved IEEE Standards Draft, subject to change.

defined in 37.31 (Procedure for operating mode and parameter updates) to notify its associated DUO assisting AP. The associated DUO assisting AP shall accept the request to en-able or disable DUO mode for the non-AP STA and shall follow the procedure defined in 37.31 (Procedure for operating mode and parameter updates).

When a DUO non-AP STA is operating in DUO mode with a DUO assisting AP, then:

— The AP that initiates frame exchange(s) with the non-AP STA that consists of neither group addressed Data nor group addressed Management frames with the non-AP STA shall initiate the frame exchange(s) by transmitting to the non-AP STA an ICF which is either:
  - An individually addressed BSRP NTB Trigger frame that includes a User Info field with the AID12 field set to the AID of the STA, and has the GI And HE/UHR-LTF Type field, in the Common Info field, set to 3 to solicit a non-HT PPDU or a non-HT duplicate PPDU.
  - An individual or group addressed BSRP Trigger frame, that includes a User Info field with the AID12 field set to the AID of the STA, and that has the GI And HE/UHR-LTF Type field, in the Common Info field, set to a value other than 3 to solicit a TB PPDU.

The BSRP NTB Trigger frame or BSRP Trigger frame shall have the UL Length field set to a value that is sufficiently large to allow the DUO non-AP STA to respond to the Trigger frame with a PPDU that contains a Multi-STA BlockAck frame with the unavailability feedback.

— The ICR frame used to indicate the unavailability feedback shall be a Multi-STA BlockAck frame and the non-AP STA that sends the Multi-STA BlockAck frame shall not include Per AID TID Info fields that follow 26.4.2 (Acknowledgment context in a Multi-STA Block Ack frame).

A DUO non-AP STA that is operating in DUO mode that receives a BSRP Trigger frame from its associated DUO assisting AP and that addresses the non-AP STA in a User Info field of the BSRP Trigger frame shall respond with a TB PPDU following the rules defined in 26.5.5 (Buffer status report operation), except that the DUO non-AP STA shall also aggregate a Multi-STA BlockAck frame that may contain the unavailability feedback along with the one or more QoS Null frames that are required according to 26.5.5 (Buffer status report operation).

A DUO non-AP STA that is operating in DUO mode and that receives, from its associated DUO assisting AP, a BSRP NTB Trigger frame that addresses the non-AP STA in a User Info field of the BSRP NTB Trigger frame shall respond subject to the rules defined in 26.5.2.5 UL MU CS mechanism, and the response shall be a Multi-STA BlockAck frame that may contain the unavailability feedback and that is sent in non-HT PPDU or non-HT duplicate PPDU format.

A DUO non-AP STA that is operating in DUO mode and that is a TXOP responder may indicate, in a Multi-STA BlockAck frame, whether the non-AP STA will be unavailable after a specific point in time and, if known, for how long, by including a Per AID TID Info field that contains an Unavailability feedback in the Multi-STA BlockAck frame (see 9.3.1.8.6 (Multi-STA BlockAck variant)). The Unavailability Duration field of the unavailability feedback shall not be set to 1023 unless the unavailability duration is unknown and the Unavailability Duration field of the unavailability feedback shall not be set to 0 unless the DUO STA is available. The Multi-STA BlockAck frame that contains the unavailability feedback shall be sent:

— in response to a BSRP NTB Trigger frame or a BSRP Trigger frame
  - This Multi-STA BlockAck frame may contain a Per AID TID Info subfield with the Ack Type field set to 1 and the TID subfield set to 13 (ICR context), and may contain a Feedback Per AID TID Info subfield, that follows the Per AID TID Info subfield for ICR context, if present, to carry unavailability feedback as in Figure 9-66a (Feedback Per AID TID Info subfield format).

— or in response to a PPDU that solicits an immediate response from the DUO STA (see 35.4 (EHT acknowledgment procedure), 26.4.2 (Acknowledgment context in a Multi-STA Block Ack frame))
  - This Multi-STA BlockAck frame shall contain one or more Acknowlegement Per AID TID Info subfields as in Figure 9-66 (Acknowledgment Per AID TID Info subfield format if the AID11

Copyright © 2025 IEEE. All rights reserved.
This is an unapproved IEEE Standards Draft, subject to change.

subfield is not 2045, 2009, or 2047) as required by 35.4 (EHT acknowledgment procedure) and 26.4.2 (Acknowledgment context in a Multi-STA BlockAck frame), that may be followed by a Feedback Per AID TID Info subfield to carry unavailability feedback as in Figure 9-66a (Feedback Per AID TID Info subfield format).

A DUO non-AP STA that is operating in the DUO mode and that is a TXOP responder indicates, in a Multi-STA Block Ack frame that is sent in response to a PPDU containing frame(s) requiring an immediate response, whether the non-AP STA experienced any in-device errors during the reception of the PPDU following the rules below:

— If the STA reports in the Multi-STA Block Ack frame that all the frame(s) requiring an immediate response were successfully received, then the STA shall set the In-Device Error Flag subfield to 0.

— If the STA reports in the Multi-STA Block Ack frame that at least one of the frames requiring an immediate response was not successfully received, then the STA shall set the In-Device Error Flag subfield to:

- 1 if at least one of the unsuccessful receptions is due to an in-device error that occurred during the reception of the PPDU containing these frame(s)
- 0 if either none of the unsuccessful receptions is due to an in-device error or the source of the error is unknown.

NOTE 1—An in-device error might be due to internal in-device coexistence, internal or external interference, or due to other internal limitations.

NOTE 2—If the AP receives an indication from the DUO STA that an in-device error has occurred during the reception of the soliciting PPDU, then the expectation is that the AP does not consider the failed reception of any of the frames that solicited an immediate response and contained in the soliciting PPDU as an input to the AP's rate selection algorithm, which is out of scope of the standard.

A DUO non-AP STA that is operating in DUO mode and that is a TXOP holder may indicate in a BSRP NTB Trigger frame addressed to the DUO assisting AP whether it will be unavailable after a specific point in time, and, if known, for how long, by including a Feedback User Info field (see 9.3.1.22.7 (Feedback User Info field)) that has a Feedback Type field set to 0 and that contains both an Unavailability Target Start Time field and an Unavailability Duration field (see 9.3.1.22 (Trigger frame format)). The DUO non-AP STA shall not transmit a BSRP NTB Trigger frame with an unavailability information more than MaxStandaloneDuoBSRP number of times every beacon interval where MaxStandaloneDuoBSRP is the non-zero value in the Maximum Standalone Duo BSRP field in the most recent DUO Parameters field transmitted by the AP, if the BSRP NTB Trigger frame is sent in a TXOP that includes no QoS Data frame transmitted by the non-AP STA. The response frame to such a BSRP NTB Trigger frame shall be a Multi-STA BlockAck frame with a Per AID TID Info field with the Ack Type field set to 1 and the TID subfield set to 13 (ICR context) in a non-HT (duplicate) PPDU.

When a DUO assisting AP receives from a DUO non-AP STA operating in DUO mode a Multi-STA BlockAck frame or a BSRP NTB Trigger frame addressed to the AP that includes an Unavailability Target Start Time field and an Unavailability Duration field, the UHR AP shall consider the STA as being unavailable:

— from the future target time indicated in the Unavailability Target Start Time field,

— for a duration indicated in the Unavailability Duration field, if the unavailability duration is between 1 and 1022, otherwise, if the unavailability duration is equal to 1023, for an indefinite duration, until the non-AP STA sends an explicit indication that the non-AP STA will transition back to being available.

NOTE—As described in 11.2.1 (General), the unavailability status of a non-AP STA does not change its power management mode or its power state and, if a non-AP STA is unavailable, it cannot receive PPDUs.

Copyright © 2025 IEEE. All rights reserved.
This is an unapproved IEEE Standards Draft, subject to change.

A non-AP STA that intends to transition from unavailable to available shall transmit a BSRP NTB Trigger frame that includes a Feedback User Info field with Feedback Type field set to 0 and with the Unavailability Duration field set to 0.

A DUO assisting AP shall maintain up to one unavailability status, consisting of an unavailability target start time and an unavailability duration per DUO non-AP STA, operating in DUO mode, and that unavailability feedback corresponds to the most recently received unavailability report, if any, in a BSRP NTB Trigger frame or a Multi-STA BlockAck frame.

NOTE—When a DUO assisting AP receives from a DUO non-AP STA operating in DUO mode a Multi-STA BlockAck frame or a BSRP NTB Trigger frame that is addressed to the AP and the frame does not include unavailability feedback, then the UHR AP does not update the unavailability status it maintains for the DUO non-AP STA (if any).

When an AP considers a non-AP STA as being unavailable during a time window after having received unavailability information as described in this subclause, the AP should not schedule for transmission any PPDU containing frames addressed to the STA if the PPDU and the solicited PPDU triggered by those frames would overlap with its the STA's unavailability time window and if the AP still transmits such a PPDU, the non-AP STA is not expected to receive the PPDUs.

NOTE—If the AP transmits PPDUs containing frames addressed to the STA during the STA's unavailability time window, then the expectation is that the AP does not take into account the failed reception of the frames contained in the PPDUs for the AP's rate selection algorithm nor for the AP's EDCA function for the AC used to transmit these frames, unless required by regulatory rules.

A DUO assisting AP that intends to update the parameter MaxStandaloneDuoBSRP shall follow the procedure defined in 37.28 (Enhanced BSS parameter critical update procedure) to notify its associated non-AP STAs.

A DUO non-AP STA that is operating in the DUO mode and that is a TXOP responder indicates, in a Multi-STA Block Ack frame that is sent in response to a PPDU containing frame(s) requiring an immediate response, whether the non-AP STA experienced any in-device errors during the reception of the PPDU following the rules below:

— If the STA reports in the Multi-STA Block Ack frame that all the frame(s) requiring an immediate response were successfully received, then the STA shall set the In-Device Error Flag subfield to 0.

— If the STA reports in the Multi-STA Block Ack frame that at least one of the frames requiring an immediate response was not successfully received, then the STA shall set the In-Device Error Flag subfield to:

  - 1 if at least one of the unsuccessful receptions is due to an in-device error that occurred during the reception of the PPDU containing these frame(s)
  - 0 if either none of the unsuccessful receptions is due to an in-device error or the source of the error is unknown.

NOTE 1—An in-device error might be due to internal in-device coexistence, internal or external interference, or due to other internal limitations.

NOTE 2—If the AP receives an indication from the DUO STA that an in-device error has occurred during the reception of the soliciting PPDU, then the expectation is that the AP does not consider the failed reception of any of the frames that solicited an immediate response and contained in the soliciting PPDU as an input to the AP's rate selection algorithm, which is by itself out of scope of the standard.

37.19.3 Non-AP STA periodic unavailability operation (PUO) mode

Non-AP STA periodic unavailability operation (PUO) allows a non-AP STA to indicate, to its associated AP, that the STA will be unavailable during periodic service periods.

Copyright © 2025 IEEE. All rights reserved.
This is an unapproved IEEE Standards Draft, subject to change.

A UHR AP that supports PUO is called a PUO Assisting AP and shall set to 1 the PUO Support field of the UHR MAC Capabilities Information field of the UHR Capabilities element that it transmits. A UHR AP that does not support PUO shall set to 0 the PUO Support field of the UHR Capabilities element that it transmits. A PUO Assisting AP shall have dot11ChannelUsageActivated equal to true and shall set to 1 the peer-to-peer TWT Support field in the Extended Capabilities element that it transmits.

A UHR Non-AP STA that supports PUO is called a PUO non-AP STA and shall set to 1 the PUO Support field of the UHR MAC Capabilities Information field of the UHR Capabilities element that it transmits. A UHR non-AP STA that does not support PUO shall set to 0 the PUO Support field of the UHR Capabilities element that it transmits. A PUO non-AP STA shall support the channel usage procedure defined in 11.21.15 (Channel Usage Procedures) and shall set to 1 the TWT Requester Support subfield in the HE Capabilities element that it transmits.

To be unavailable during specific service periods, a PUO non-AP STA shall follow the rules defined in 11.21.15 (Channel Usage Procedures) to report its periodic unavailability to its associated PUO Assisting AP. A PUO Assisting AP that intends to exchange frames with the PUO non-AP STA shall follow the rules defined in 11.21.15 (Channel Usage Procedures) that are related to the peer-to-peer TWT procedure.

Enhancements to the P2P TWT procedure are described in this subclause.

When a PUO Assisting AP considers a PUO non-AP STA as being unavailable during a service period after having received a periodic unavailability indication through peer-to-peer TWT as described below, the PUO Assisting AP should not schedule for transmission any PPDU containing frames addressed to the PUO non-AP STA if this PPDU overlaps with the PUO non-AP STA's unavailability service period and if the AP still transmits a PPDU that overlaps with the PUO non-AP STA's unavailability service period then the PUO non-AP STA is not expected to receive the PPDUs.

NOTE—If a PUO Assisting AP transmits PPDUs containing frames addressed to a PUO non-AP STA during the PUO non-AP STA's unavailability service period, then the expectation is that the PUO Supporting AP does not take into account the failed reception of the frames contained in the PPDUs for its rate selection algorithm nor for its EDCA function for the AC used to transmit these frames, unless required by regulatory rules.

37.19.4 AP PUO mode

AP PUO mode allows a UHR AP to manage activity in the BSS, composed of associated STAs that support this feature, by defining service periods, and to either save power or use internal resources elsewhere by allowing the AP to be unavailable to all associated STAs outside of these service periods. A UHR AP that supports AP periodic unavailability operation mode is called a APPUO AP and shall set AP PUO Support field in the UHR MAC Capabilities Information field of the UHR Capabilities element it transmits to 1. A UHR AP that does not support AP periodic unavailability operation mode shall set the AP PUO Support field to 0 in the UHR Capabilities element that it transmits. An APPUO AP shall have dot11TWTOptionActivated equal to true and shall set the Broadcast TWT Support field in the HE Capabilities element it transmits to 1. A UHR STA supporting operation with a APPUO AP is called a APPUO Assisting non-AP STA and shall set the APPUO Support field of the UHR MAC Capabilities Information field of the UHR Capabilities element that it transmits to 1. An APPUO Assisting non-AP STA shall have dot11TWTOptionActivated equal to true and shall set the Broadcast TWT Support field in the HE Capabilities element it transmits to 1.

To be unavailable outside of broadcast TWT SPs, an APPUO AP shall ensure that all associated STAs support the mechanism and shall follow the rules defined in 26.8.3.2 (Rules for TWT scheduling AP) by advertising a TWT element that carries one or more Broadcast TWT Parameter Set fields with a Broadcast TWT ID field set to 0, a Responder PM Mode subfield set to 1. The NDP Paging Indicator/Unavailability Mode subfield is set to 0 to indicate that the AP is unavailable outside of these broadcast TWT SPs, except within any other TWT SP that is setup with the AP or that is advertised by the AP (see baseline subclause). The NDP Paging Indicator/Unavailability Mode subfield is set to 1 to indicate that the AP is unavailable

Copyright © 2025 IEEE. All rights reserved.
This is an unapproved IEEE Standards Draft, subject to change.

outside of these broadcast TWT SPs, even if that time falls within any other TWT SP that is setup with the AP or that is advertised by the AP (see baseline subclause). An APPUO Assisting non-AP STA that intends to exchange frames with the APPUO AP shall follow the rules defined in 26.8.3.3 (Rules for TWT scheduled STA).

An APPUO AP that intends to enable or disable AP PUO mode shall follow the procedure defined in 37.32 (Enhanced BSS parameter critical update procedure(#12610)) to notify its associated APPUO assisting non-AP STA.

NOTE—If an APPUO Assisting non-AP STA transmits PPDUs containing frames addressed to an APPUO AP during the AP's unavailability period, then the expectation is that the STA does not take into account the failed reception of the frames contained in the PPDUs for its rate selection algorithm nor for its EDCA function for the AC used to transmit these frames, unless required by regulatory rules.

37.19.5 Adaptive operation mode

A STA that has dot11AdaptiveOperationModeImplemented equal to true shall set the AOM Support field in the UHR MAC Capabilities subfield of the UHR Capabilities element that it transmits to 1 and to 0 otherwise.

A non-AP STA with dot11AdaptiveOperationModeImplemented equal to true is referred to as an AOM STA. An AP with dot11AdaptiveOperationModeImplemented equal to true is referred to as an AOM assisting AP.

NOTE—The AOM Request frame can request the enablement/disablement and update of AOM parameters for multiple non-AP STAs that are affiliated with the same non-AP MLD (see 37.31 (Procedure for operating mode and parameter updates)). This allows the non-AP MLD to adaptively allocate/update the resources/parameters for multiple links at the same time.

When an AOM STA (re)associates with an AOM assisting AP, AOM is disabled by default. An AOM STA that intends to enable, disable or update the parameters of AOM shall follow the procedure defined in 37.31 (Procedure for operating mode and parameter updates).

In the UHR OMP request sent to enable or update the parameters of AOM for the AOM STA, the AOM STA shall include the following in the Mode Parameters field of the Mode Tuple field:

— The Maximum MCS field shall indicate the maximum MCS that is supported by the STA in transmit and receive.
— The Maximum NSS field shall indicate the maximum NSS that is supported by the STA in transmit and receive.
— The Maximum Bandwidth field shall indicate the maximum channel width that is supported by the STA in transmit and receive.
— The LDPC Mode field shall indicate if LDPC mode is supported by the STA in transmit and receive.
— The HT-Immediate BA Mode field shall indicate whether all HT-immediate block ack agreements are suspended or not.
— The Disabled Subchannel Bitmap field shall indicate whether any of the 20 MHz subchannels that lie within the BSS operating bandwidth are disabled or not. The AOM STA shall not disable the 20 MHz subchannel that corresponds to the primary 20 MHz channel.

NOTE—For the items above, the term "transmit" applies to the transmission of a TB PPDU that is solicited by a triggering frame.

The AOM assisting AP shall accept the request and follow the procedure defined in 37.31 (Procedure for operating mode and parameter updates) and shall satisfy the AOM parameters indicated in the OMP request.

Copyright © 2025 IEEE. All rights reserved.
This is an unapproved IEEE Standards Draft, subject to change.

NOTE—For an AOM STA to enable AOM, the associated AP must be an AOM assisting AP (see 37.31 (Procedure for operating mode and parameter updates).

The AOM assisting AP shall ensure that all SU PPDUs exchanged with an AOM STA and RUs allocated to an AOM STA within MU PPDUs and TB PPDUs do not exceed the values of the maximum MCS, the maximum NSS, and maximum bandwidth in the AOM parameter set of the AOM STA.

The AOM assisting AP shall ensure that none of the SU PPDUs exchanged with an AOM STA or RUs allocated to an AOM STA within MU PPDUs and TB PPDUs use LDPC coding if the LDPC Mode Suspend field is 1 in the AOM parameter set of the AOM STA. The AOM assisting AP may resume using LDPC coding when the LDPC Mode Suspend field in the AOM parameter set equal to 0.

The AP MLD which the AOM assisting AP is affiliated with, shall suspend all HT-immediate blockack agreements with the non-AP MLD which the AOM STA is affiliated with if the HT-Immediate BA Mode Suspend field is 1 in the most recently received AOM parameter set sent from any of the AOM STAs affiliated with the non-AP MLD. The AP MLD which the AOM assisting AP is affiliated with shall resume all HT-immediate blockack agreements when the HT-Immediate BA Mode Suspend field in the most recently received AOM parameter set sent from any of the AOM STAs affiliated with the non-AP MLD is equal to 0.

NOTE—If an AOM STA affiliated with a non-AP MLD has suspended all HT-immmediate block ack agreements then all corresponding temporary block acknowledgment records are expected to be discarded (see 10.25.6 (HT-immediate block ack extensions), all inactivity timers for these HT-immediate block ack agreements are suspended (see 11.5.4 (Error recovery upon a peer failure), and the receive reordering buffer is expected to have passed all MSDUs and A-MSDUs up to the next MAC process (see 10.25.6.6 (Receive reordering buffer control operation)).

The AOM STA shall ensure that the combination of the puncture pattern in the Disabled Subchannel Bitmap field of the AOM parameter set that it sends to the AP and of the puncture pattern in the Disabled Subchannel Bitmap field advertised by the AP in its EHT Operation element (if any), matches a preamble puncture pattern defined in 35.15.2 Preamble puncturing operation.

The AOM assisting AP and the AOM non-AP STA when initiating a transmission shall set the TXVECTOR parameter INACTIVE_SUBCHANNELS for the 20 MHz subchannels that are indicated as punctured by the AOM STA in the Disabled Subchannel Bitmap field of the AOM parameter set and for the sub-channels that are punctured by the BSS (if any) for EHT, UHR PPDUs and non-HT PPDUs of single-user transmissions exchanged between them, except that:

— If the AOM non-AP STA sends a punctured PPDU transmission to the AOM assisting AP that is the first frame of a frame exchange between them and that is a non-HT duplicate PPDU that has punctured sub-channels that are not advertised by the BSS and, that contains a Control frame that solicits a control response frame then the PPDU sent by the AOM assisting AP containing the control response frame shall be punctured on the sub-channels that are advertised by the BSS (if any) and may not be punctured on the sub-channels that are advertised by the AOM STA.

The AOM assisting AP shall ensure that, for PPDUs addressed to multiple STAs including an AOM STA and for a TB PPDU solicited from an AOM STA, the AOM STA is not allocated resources in any of the 20 MHz subchannels that are indicated as disabled by the AOM STA in the Disabled Subchannel Bitmap field of the AOM parameter set.

Copyright © 2025 IEEE. All rights reserved.
This is an unapproved IEEE Standards Draft, subject to change.

37.20 UHR TWT operation

37.20.1 TWT SP early termination

A UHR STA shall set the EOTSP Support field in the UHR MAC Capabilities Information field of the UHR Capabilities element to 1 if dot11UHREOTSPImplemented is true; otherwise, the UHR STA shall set the EOTSP Support field to 0.

A UHR STA with dot11UHREOTSPImplemented equal to true that is a TWT requesting STA or a TWT scheduled STA may set the EOTSP subfield to 1 in a QoS Null frame it transmits during an ongoing TWT SP during an ongoing TWT SP to indicate that the STA does not have any pending traffic for the remainder of the current TWT SP.

A UHR STA with dot11UHREOTSPImplemented equal to true that is a TWT responding STA or a TWT scheduling AP, and that receives a QoS Null frame with the EOTSP subfield equal to 1 during a TWT SP, may terminate the TWT SP for the STA that sent the QoS Null frame as described in 26.8.5 (Power save operation during TWT SPs).

37.21 Enhanced multi-link single-radio (EMLSR) operation for a UHR non-AP MLD

A UHR AP MLD with dot11EHTEMLSROptionActivated equal to true shall follow the rules defined in 35.3.17 (Enhanced multi-link single-radio (EMLSR) operation) and in this subclause. In EMLSR mode, a UHR non-AP MLD shall follow the rules defined in 35.3.17 (Enhanced multi-link single-radio (EMLSR) operation) and in this subclause.

When a UHR non-AP MLD that supports EMLSR mode (re)associates with an AP MLD, the EMLSR mode is disabled by default for the non-AP MLD. A UHR non-AP MLD shall not use the procedure to enable, disable or update parameters defined in 35.3.17 (Enhanced multi-link single-radio (EMLSR) operation) when associated with a UHR AP MLD with dot11EHTEMLSROptionActivated equal to true. Instead, if the UHR non-AP MLD intends to enable, disable or update the parameters of EMLSR mode with its associated UHR AP MLD, the UHR non-AP MLD shall follow the procedure defined in 37.31 (Procedure for operating mode and parameter updates). In the UHR OMP request sent to enable or update the parameters of EMLSR mode for the non-AP MLD, the non-AP MLD shall include the following in the Mode Parameters field of the Mode Tuple field:

— EMLSR link bitmap
— EMLSR padding delay
— EMLSR transition delay
— In-Device Coexistence Activities field

The associated AP MLD shall accept the request and follow the procedure defined in 37.31 (Procedure for operating mode and parameter updates).

NOTE—For a non-AP MLD to enable EMLSR mode, the associated AP MLD must have dot11EHTEMLSROptionActivated equal to true (see 37.31 (Procedure for operating mode and parameter updates)).

If a UHR non-AP MLD operates in EMLSR mode and is associated to a UHR AP MLD, then:

— An AP affiliated with the UHR AP MLD shall include an IFCS in the ICF addressed to a STA affiliated with the non-AP MLD on the EMLSR link, if needed by the non-AP MLD.
— The AP affiliated with the AP MLD shall set the length of the Padding field of the ICF based on the rules defined in 37.22 (Use and requirements of initial Control frames) when the IFCS field is present.

Copyright © 2025 IEEE. All rights reserved.
This is an unapproved IEEE Standards Draft, subject to change.

If a non-AP STA that is operating in EMLSR mode on the EMLSR link as the TXOP responder performs frame exchanges in a TXOP under any of the following conditions

— being in the NPCA primary channel,

— being in HC mode,

— being in the DSO subband,

then, the non-AP MLD with which the non-AP STA is affiliated is treated as if, in the TXOP, the EMLSR Transition Delay field has the same value as the maximum value of the following fields

— he NPCA Switch Back Delay field if the TXOP responder switches back to the primary channel,

— the DPS Transition Delay field if the TXOP responder switches back to LC mode,

— the DSO Switchback Delay field if the TXOP responder switches back to the primary channel from the DSO subband,

— the EMLSR Transition Delay field.

37.22 Use and requirements of initial Control frames

If an IFCS and padding are required in an ICF addressed to a UHR STA affiliated with an MLD, then the peer UHR STA affiliated with an MLD shall set the length of the Padding field of the ICF based on the rules defined in 35.5.2.2.3 (Padding for a Trigger frame), with the following superseding requirements:

— The padding shall satisfy independently the padding requirement of each mode of operation enabled by the UHR STA, where the padding requirement is specified in:

- the UHR STA's DPS Padding Delay field for DPS mode (see 37.17.1 (Dynamic power save (DPS) operation)) if DPS is enabled by the STA,
- the UHR STA's DSO Padding Delay field for DSO mode if DSO is enabled by the STA and the STA is switching to the DSO subband (see 37.26 (Dynamic subband operation (DSO)(#7567))),
- the EMLSR Padding Delay field of the non-AP MLD with which the UHR STA is affiliated for EMLSR mode if EMLSR is enabled (see 37.21 (Enhanced multi-link single-radio (EMLSR) operation for a UHR non-AP MLD)).

— For each of EMLSR, DSO and DPS, if enabled by the UHR STA, the bits after the last User Info field carrying the IFCS are at least $L_{\mathrm{PAD,\,MAC}}$, defined in Equation (35-1), where m_{PAD} is equal to 0 if no padding is required and m_{PAD} is equal to the padding requirement of the mode if the padding is required.

Editor's Note: CID 2165 has been resolved by both 11-25/946r2 of Motion 453 and 11-25/1097r6 of Motion 488. The Editor adopts the changes in the later motion, after discussing with the assignees.

A UHR STA shall set the IFCS Location Support field to 1 in UHR Capabilities elements it transmits if dot11IFCSLocationIndicationImplemented is true and shall set it to 0 otherwise.

A UHR STA that transmits a Trigger frame as an ICF shall include an IFCS Location Indication field in the Trigger frame if both of the following conditions are satisfied:

— The IFCS Absent Flag subfield of the Common Info field of the Trigger frame is equal to 0.

— The STA has set the IFCS Location Support field to 1 in the UHR Capabilities element it transmits.

A UHR AP may always transmit a BSRP NTB Trigger frame or a BSRP Trigger frame that is addressed to a UHR non-AP STA operating in DUO mode, including when DUO mode is used in addition to one or more of the EMLSR, DPS or NPCA modes. Otherwise, if the non-AP STA is not operating in DUO mode, the AP shall not use a BSRP NTB Trigger frame as an initial control frame to the UHR non-AP STA.

Copyright © 2025 IEEE. All rights reserved.
This is an unapproved IEEE Standards Draft, subject to change.

A UHR AP shall set the OM Control UL MU Data Disable RX Support field in the UHR Capabilities element to 1 if the UHR AP has dot11DUOOptionImplemented equal to true.

A UHR STA shall follow the procedure defined in 26.9 (Operating mode indication), except for the following:

— If a non-AP UHR STA has received the OM Control UL MU Data Disable RX Support field in the HE Capabilities element equal to 0 and the OM Control UL MU Data Disable RX Support field in the UHR Capabilities element equal to 1, then the non-AP UHR STA, acting as an OMI initiator, may set the UL MU Disable subfield to 0 and the UL MU Data Disable subfield to 1 to indicate that only responding to a Basic Trigger frame with Data/Management frames is suspended (see 26.9.3 Transmit operating mode (TOM) indication)).

— An OMI responder that has transmitted the OM Control UL MU Data Disable RX Support subfield set to 1 in either the HE Capabilities element or the UHR Capabilities element shall regard an OMI initiator as capable of participating in UL MU operation, except for responding to a Basic Trigger frame with Data/Management frames if the UL MU Disable subfield is equal to 0 and the UL MU Data Disable subfield is equal to 1 in the most recently received OM Control subfield from that OMI initiator (see 26.9.3 Transmit operating mode (TOM) indication)).

NOTE—A UHR non-AP STA that is operating in DUO mode is not expected to set the UL MU Disable subfield to 1 in transmitted OM Control subfields because any UL MU Disable field set to 1 sent by the non-AP STA is ignored by the AP if the non-AP STA is operating in DUO mode since the AP sends ICFs to the DUO STA.

If a UHR STA receives a Trigger frame that is an initial Control frame that contains an IFCS, and if the STA performs a CRC check on the IFCS, then the STA may treat the frame reception as successful, if the CRC check passes.

37.23 Peer-to-peer (P2P) communications

37.23.1 TXOP sharing for multiple P2P non-AP STAs

37.23.1.1 General

This subclause describes a set of operations that enable an AP to share a TXOP with multiple P2P non-AP STAs.

A non-AP STA that has dot11TXSPGOptionImplemented equal to 1 supports TXOP sharing with a group of P2P non-AP STAs (TXSPG), is called a TXSPG non-AP STA, and shall set the TXSPG Supported field of the UHR MAC Capabilities Information field of the UHR Capabilities element to 1. A UHR AP that has dot11TXSPGOptionImplemented equal to 1 supports TXOP sharing with a group of P2P non-AP STAs, is called a TXSPG AP, and shall set the TXSPG Supported field of the UHR MAC Capabilities Information field of the UHR Capabilities element to 1.

A TXSPG requesting STA is a TXSPG non-AP STA that requests that the associated AP share its TXOP(s) with the P2P group of which the non-AP STA is a member.

37.23.1.2 AP behavior

Following the SCS procedure for TXSPG (see 37.23.1.4 (SCS Procedure for TXSPG)), a UHR AP may allocate time within an obtained TXOP to a P2P group by transmitting an MU-RTS TXS Trigger frame with the following field settings :

— The TXS Mode subfield of the Common Info field shall be set to 2.

Copyright © 2025 IEEE. All rights reserved.
This is an unapproved IEEE Standards Draft, subject to change.

— The MU-RTS TXS Trigger frame shall have only one User Info field that is not a Special User Info field.
— The User Info field shall be addressed to the P2P group (i.e., the AID12 subfield shall be set to the value assigned for the P2P group by the AP).
— The time allocated to the P2P group is specified in the Allocation Duration subfield in the MU-RTS TXS Trigger frame.
— The Duration field of the MU-RTS TXS Trigger frame shall be set to one SIFS plus the time required to transmit the solicited CTS response frame.

A UHR AP shall not send an MU-RTS TXS Trigger frame with the TXS Mode subfield equal to 2 and the AID12 field in the User Info field set to the AID12 value assigned by the AP for a P2P group for which the AP did not receive a TXOP sharing request from an associated TXSPG non-AP STA.

If the UHR AP determines that its transmission of an MU-RTS TXS Trigger frame with the TXS Mode subfield equal to 2 and the AID12 field set to a value assigned for a P2P group is successful, then the AP shall not transmit any PPDU within the allocated time specified in the MU-RTS TXS Trigger frame unless one of the following conditions are true:

— The PPDU carries an immediate response that is solicited by the TXSPG requesting STA.
— The AP sets the TXOP Return Support In TXSPG subfield equal to 1 and receives a frame from the TXSPG requesting STA of the P2P group containing a CAS Control field with the RDG/More PPDU subfield equal to 0, in which case the AP may resume its TXOP (if any time remains) a SIFS after the frame with a CAS Control field.

A TXSPG AP that is a TXOP owner, for sharing a portion of its obtained TXOP with a P2P group, shall follow the fairness rules described in 37.27 (Fairness considerations for TXOP sharing).

37.23.1.3 Non-AP STA behavior

If a TXSPG non-AP STA receives an MU-RTS TXS Trigger frame from its associated AP that contains all of the following:

— a Common Info field with the TXS Mode field equal to 2,
— a User Info field addressed to its P2P group (i.e., the AID12 subfield value is set to a value assigned for the P2P group by the AP),

then the non-AP STA shall transmit a CTS frame aSIFS after the end of the received PPDU carrying the Trigger frame if the non-AP STA is the TXSPG requesting STA for the P2P group; otherwise, the non-AP STA shall not transmit the CTS frame.

After the TXSPG requesting STA transmits the CTS frame, a TXSPG non-AP STA (including the TXSPG requesting STA) that is a member of the P2P group may transmit one or more PPDUs within the time allocation indicated in the MU-RTS TXS trigger frame with the following rules:

— each TXSPG non-AP STA shall consider the status of the CCA and the NAV during the SIFS prior to the PPDU that the TXSPG non-AP STA intends to transmit.
— all PPDUs shall be separated by SIFS, except for TXOP recovery.
— how the transmissions are scheduled among the TXSPG non-AP STAs is out of the scope of the standard.

The frames within the PPDUs may be addressed to the AP or to another non-AP STA.

A TXSPG requesting STA that received an MU-RTS TXS Trigger frame with the TXSMode subfield equal to 2 and the AID12 field in the User Info field set a value assigned by the AP for the TXSPG requesting

Copyright © 2025 IEEE. All rights reserved.
This is an unapproved IEEE Standards Draft, subject to change.

STA's P2P group may transmit, within an allocated time, a QoS Data or QoS Null frame that includes an HE variant HT Control field with a CAS Control subfield with the RDG/More PPDU subfield set to 0 to the associated AP from which the STA has received a UHR Capabilities element with the TXOP Return Support in TXSPG subfield equal to 1 in order to indicate the return of the TXOP back to the AP. Otherwise, the TXSPG requesting STA shall not transmit such a frame to its associated AP within the time allocated for the P2P group. A TXSPG non-AP STA that is not the TXSPG requesting STA for the P2P group shall not transmit, within an allocated time, a QoS Data or QoS Null frame that includes an HE variant HT Control field with a CAS Control subfield with the RDG/More PPDU subfield set to 0 to the AP.

A TXSPG non-AP STA in a P2P group identified by the AID12 field in the User Info field contained in an MU-RTS TXS Trigger frame shall ensure that its PPDU transmission(s) and any expected responses fit entirely within the allocated time for the P2P group.

The TXSPG Requesting STA shall transmit a frame SIFS after transmitting the CTS in response to the MU-RTS TXS frame from the AP and the TXSPG Requesting STA shall be part of frame exchanges during the TXSPG operation. After the TXSPG requesting STA transmits a frame immediately after sending the CTS solicited by the MU-RTS TXS Trigger frame for TXSPG, a TXSPG non-AP STA that is a member of the P2P group addressed by the Trigger frame shall set the Duration/ID field of its following frames(s) to indicate a NAV end time that is no later than the ending time of the PPDU[+SigExt] carrying the MU-RTS TXS Trigger frame plus the allocated time duration in the Allocation Duration field of the soliciting MU-RTS TXS Trigger frame for TXSPG. Within the time allocated by the MU-RTS TXS Trigger frame, the TXSPG non-AP STA in that P2P group may transmit QoS Data frames, Management frames, and frames that assist the transmission of QoS Data and Management frames, e.g., RTS/CTS frames, sounding frames, acknowledgment frames.

37.23.1.4 SCS Procedure for TXSPG

A non-AP STA with dot11TXSPGOptionImplemented equal to true may send an SCS Request frame that contains a QoS Characteristics element whose Direction field is set to 2 (Direct Link) and a P2P Group Information subfield included in the QoS Characteristics element only if both the non-AP STA and the associated UHR AP set the TXSPG Support subfield in the UHR Capabilities element that they transmit to 1. For a particular P2P group, no more than one non-AP STA that is a member of the P2P group shall send the SCS request frame to the AP requesting TXOP allocation for that P2P group. The AP, if it accepts the SCS request, shall include a P2P Group Information field in the QoS Characteristics element in the SCS Response frame with the AID12 field in the P2P Group Information field indicating the AID12 value assigned for the P2P group by the AP. The AP shall not assign the same AID12 value assigned for the P2P group to any other non-AP STA or any other P2P group. The AP, if it accepts the SCS request, should facilitate the transmission of P2P frames within the P2P group on the link specified in the LinkID subfield of the Control Info field of the QoS Characteristics element with an interval that falls between the requested minimum and maximum service intervals.

37.24 Low-latency indication (LLI)

37.24.1 General

Low-latency indication (LLI) enables a (#12604)UHR non-AP STA that is a TXOP responder to inform (#12604)a UHR AP STA that is a TXOP holder regarding its low-latency needs. The low-latency needs are related to pending buffered low-latency traffic from the TXOP responder for uplink delivery (#4876, #5028)with the TXOP holder or for peer-to-peer delivery to a STA other than the TXOP holder. The non-AP MLD to which the non-AP STA is affiliated shall use the SCS procedure (#9299)(see 35.17 (EHT SCS procedure)) to request the use (#4937, #5838, #4880, #8472, #8713)of the LLI mode for delivery of the LLI and follow the procedure defined in 37.31 (Procedure for operating mode and parameter updates). (#12557, #4937, #5838, #4880, #8472, #8713)The LLI mode when enabled is used to feedback LLI for the buffered

Copyright © 2025 IEEE. All rights reserved.
This is an unapproved IEEE Standards Draft, subject to change.

low-latency traffic. (#6572, #8100, #4937, #5838, #4880, #8472, #8713)The low-latency traffic is the traffic associated (#4881)with the SCS stream(s) with LLI Requested subfield in the QoS Characteristics element equal to 1.(#4937, #5838, #4880, #8472, #8713)

A UHR STA that supports LLI(#Ed) has dot11LLIOptionActivated equal to true and shall set the (#6325, #12561)UL LLI Support field of the UHR MAC Capabilities Information field of the UHR Capabilities element to 1 if the STA supports reporting buffered low-latency traffic for delivery to the TXOP holder, and shall set the Peer-to-peer LLI Support field of the UHR MAC Capabilities information field of the UHR Capabilities element to 1 if the STA supports reporting (#5915)buffered low-latency traffic for delivery to a STA other than the TXOP holder.

A UHR STA with dot11LLIOptionActivated equal to true is called an(#4992, #12600) LLI STA.

(#6350, #4938, #5221, #12577)An LLI non-AP STA that is a TXOP responder may indicate its low-latency needs to the (#5401, #12563)LLI AP that is a TXOP holder in a Multi-STA BlockAck frame sent to the TXOP holder if the TXOP holder has LLI mode (#2482, #4993, # 8473, #9300, #6473)enabled.

When (#5917, #9310)an LLI non-AP STA (re)associates with an AP, LLI mode is disabled by default for the (#5917, #9310)LLI non-AP STA. (#5917, #9310)An LLI non-AP STA (#4877, #4913, #5030, #5916, #8474, #8715, #9304)that intends to enable or disable LLI mode shall send a UHR OMP request by following the procedure defined in 37.31 (Procedure for operating mode and parameter updates) (#12568)if the conditions in 37.24.2 (Low-latency indication (LLI) mode) are satisfied.

NOTE—The LLI non-AP STA can send a UHR OMP request to the LLI AP to enable LLI mode if there is at least one SCS stream established with the AP that had the LLI Requested field in the QoS Characteristics element set to 1.

The associated AP shall accept the request and follow the procedure defined in 37.31 (Procedure for operating mode and parameter updates).(#6435)

37.24.2 Low-latency indication (LLI) mode

For (#6350, #4938, #5221, #12577)an LLI non-AP STA, to enable the LLI mode(#12602), the corresponding non-AP MLD (#4878)with which the (#5917, #9310)LLI non-AP STA is affiliated shall have at least one SCS stream established with its associated AP MLD that supports LLI mode (#4883)in which the LLI Requested subfield in the QoS (#12606, #5027, #6347)Characteristics element is set to 1 (#4942, #5029, #12573, #12573)(see 9.4.2.327 (QoS Characteristics element)). The LLI mode is considered disabled if all SCS streams where the LLI Requested subfield in the QoS (#12606)Characteristics element is set to 1 are terminated by either (#6350, #4938, #5221, #12577)LLI non-AP STA or the LLI AP(#6350, #4938, #5221).(#5222, #5661, #9305, #12581)

A non-AP LLI MLD STA shall not establish SCS streams with its associated AP LLI MLD STA where the LLI Request subfield in the QoS Characteristic element is equal to 1 and the Direction subfield in the QoS Characteristic element is equal to UL and direct link.

NOTE—The Direction field of all SCS request frames sent by a non-AP LLI MLD that have the LLI Requested subfield equal to 1 will have the Direction field in the QoS Characteristics element set to the same value (0 or 2).

When (#6350, #4938, #5221, #12577)an LLI non-AP STA is operating with the LLI mode enabled:

— The (#6350, #4938, #5221, #12577)LLI non-AP STA shall use (#7517)a Multi-STA BlockAck frame, which may include (#11372, #8099, #9994, #8037)the LLI feedback(#4544)(see 9.3.1.8.6.4 (Low-latency feedback)), if the preceding PPDU includes MPDU(s) that solicit an immediate response (e.g., Ack or BlockAck) and shall follow the rules in 37.7 (UHR Acknowledgement Procedure).

— The AP that initiates frame exchanges with the (#5917, #9310)LLI non-AP STA that consists of neither group addressed Data nor group addressed Management frames (#9309)may initiate the frame

Copyright © 2025 IEEE. All rights reserved.
This is an unapproved IEEE Standards Draft, subject to change.

exchanges by transmitting to the (#5917, #9310)LLI non-AP STA an ICF that allows to carry the LLI feedback in the (#4994, #12590)ICR frame (see 37.8 (Rules for initial Control and initial Control response frames)).

- (#4914, 11369)The ICF is either an individually addressed BSRP NTB Trigger frame, if the BSRP NTB Trigger frame is allowed to be sent to the (#5917, #9310)LLI non-AP STA, or an individual or group addressed BSRP Trigger frame as defined in 37.8 (Rules for initial Control and initial Control response frames).
- (#4914, 11369)The ICR frame used to indicate the (#11372, #8099, #9994, #8037)LLI feedback shall be a Multi-STA BlockAck frame and shall follow the rules in 37.8 (Rules for initial Control and initial Control response frames).

(#5917, #9310)An LLI non-AP STA that is operating (#11371)with LLI mode enabled that receives a BSRP Trigger frame from its associated AP and that addresses the (#5917, #9310)LLI non-AP STA in a User Info field of the BSRP Trigger frame shall respond with a TB PPDU following the rules defined in 26.5.5 (Buffer status report operation), except that the (#5917, #9310)LLI non-AP STA shall also aggregate a Multi-STA BlockAck frame, that may contain (#11372,#8099,#9994,#8037)LLI feedback (#4544)(see 9.3.1.8.6.4 (Low-latency feedback)), along with the one or more QoS Null frames that are required according to (#5224, #8716, #11370, #12592)37.8 (Rules for initial Control and initial Control response frames).

(#5917, #9310)An LLI non-AP STA that is operating (#11371)with the LLI mode enabled and that receives, from its associated AP, a BSRP NTB Trigger frame that addresses the (#5917, #9310)LLI non-AP STA in a User Info field of the BSRP NTB Trigger frame shall respond subject to the rules defined in 26.5.2.5 (#9312)(UL MU CS mechanism), and the response shall be a Multi-STA BlockAck frame that may contain the (#11372,#8099,#9994,#8037)LLI feedback (#4544)(see 9.3.1.8.6.4 (Low-latency feedback)), and that is sent in non-HT PPDU or non-HT duplicate PPDU format (see (#8717)37.8.3 (BSRP NTB Trigger frame soliciting a non-HT (duplicate) PPDU)).

(#5917, #9310)An LLI non-AP STA that is operating (#11371)with LLI mode enabled and that is a TXOP responder may indicate, in a Multi-STA BlockAck frame, whether the (#5917, #9310)LLI non-AP STA has pending buffered UL low-latency traffic related to one or more SCS streams that have been established with LLI Requested subfield set to 1 and Direction subfield set to 0 (#6349)(Uplink), by including a Per-AID TID Info field that has the Feedback Type subfield in the Starting Sequence Control subfield set to 1 (#11372,#8099,#9994,#8037)(i.e., a Per-AID TID Info field that carries LLI feedback) and by setting the Low-Latency Indication subfield to 1 or 0 in the Feedback subfield (see 9.3.1.8.6 (Multi-STA BlockAck variant)).

(#5917, #9310)An LLI non-AP STA that is operating (#11371)with LLI mode enabled and that is a TXOP responder may indicate, in a Multi-STA BlockAck frame, whether the (#5917, #9310)LLI non-AP STA has pending buffered low-latency traffic to a STA other than the TXOP holder related to one or more SCS streams that have been established with LLI Requested subfield set to 1 and Direction subfield set to 2, (#6349)(Direct Link), (#9314)by including a Per-AID TID Info field that has the Feedback Type subfield in the Starting Sequence Control subfield set to 1 and by setting the Peer-to-peer Low-Latency Indication subfield to 1 or 0 in the Feedback subfield (see 9.3.1.8.6 (Multi-STA BlockAck variant)).

Upon receiving the (#11372,#8099,#9994,#8037)LLI feedback in the Multi-STA BlockAck frame, the TXOP holder should consider the (#11372,#8099,#9994,#8037)LLI feedback in determining subsequent actions within the current TXOP or subsequent TXOPs. The subsequent actions taken by the TXOP holder after receiving the (#11372,#8099,#9994,#8037)LLI feedback are out of scope of the standard.

37.25 UHR SCS procedure

A UHR STA that supports mapping of up to one additional TID from AC_BE and up to one additional TID from AC_BK to AC_VO and AC_VI access categories for an SCS stream shall set the SCS Traffic

Copyright © 2025 IEEE. All rights reserved.
This is an unapproved IEEE Standards Draft, subject to change.

Description Support subfield value in the EHT Capabilities element to 1 and shall set the Additional Mapped TID Support subfield value in the UHR MAC Capabilities field of the UHR Capabilities element to 1; otherwise, it shall set to 0.

A non-AP UHR STA shall not send an SCS Request frame containing a QoS Characteristics element in which the User Priority subfield is not equal to the value of the TID subfield to an AP from which the non-AP UHR STA has not received a UHR Capabilities element in which the Additional Mapped TID Support subfield value is set to 1. If a QoS Characteristics element contains a TID subfield value that is not equal to the User Priority subfield value, then that TID is referred to as an additional TID in this subclause.

A non-AP UHR STA that has set the Additional Mapped TID Support subfield value in the UHR Capabilities element that the STA transmits to 1 and that intends to use an additional TID for an SCS stream shall send an SCS Request with a QoS Characteristics element according to the following rules:

— The additional TID shall be in the range 0 to 3 inclusive.
— The TID subfield is set to the additional TID value.
— The UP subfield is set to a value that corresponds to the access category to be used by that stream and is set to a value in the range 4 to 7 inclusive (see Table 10-1 UP-to-AC mappings).
— The Direction subfield is set to indicate Uplink or Downlink direction.

A non-AP UHR STA should give first preference to select an additional TID from the AC_BK access category, and second preference to select an additional TID from the AC_BE access category. All traffic that concurrently use the same additional TID shall belong to the same access category.

A non-AP UHR STA shall not request concurrent activation of both TIDs 0 and 3 as additional TIDs for SCS stream, or concurrent activation of both TIDs 1 and 2 as additional TIDs.

A UHR AP that is affiliated with an AP MLD may optionally include a QoS Map element within an SCS Response frame transmitted to a non-AP UHR STA that is affiliated with a non-AP MLD to update the DSCP-to-UP mapping for UL at the non-AP STA if all the following conditions are true:

— The SCS Request frame received from the non-AP UHR STA has a QoS Characteristics element with the Direction subfield set to indicate Uplink and the TID and the User Priority subfields of the Control Info field are set to different values between 0 and 7 inclusive.
— The AP MLD has the QoS Map field set to 1 in the Extended Capabilities element.
— The non-AP MLD has the QoS Map field set to 1 in the Extended Capabilities element.

37.26 Dynamic subband operation (DSO)(#7567)

A non-AP STA that has dot11DSOOptionActivated set to true is called a dynamic subband operation (DSO) non-AP STA and shall set the DSO Supported field of the UHR MAC Capabilities Information field of the UHR Capabilities element to 1; otherwise, the non-AP STA shall set the DSO Support subfield to 0. An AP that has dot11DSOOptionActivated set to true is called a DSO AP and shall set the DSO Support subfield of the UHR MAC Capabilities Information field of the UHR Capabilities element to 1; otherwise, the AP shall set the DSO Support subfield to 0.

DSO is a mechanism where a DSO non-AP STA that has an operating bandwidth narrower than the DSO AP can dynamically be allocated frequency resources outside of its current operating bandwidth within the DSO AP's BSS bandwidth, on a per-TXOP basis.

For a DSO non-AP STA, the channel with bandwidth equal to the STA's operating bandwidth which includes the BSS primary channel is referred to as the primary subband. For a DSO non-AP STA, a channel with bandwidth equal to the STA's operating bandwidth which lies outside of the STA's primary subband but

Copyright © 2025 IEEE. All rights reserved.
This is an unapproved IEEE Standards Draft, subject to change.

within the BSS bandwidth, where it can be allocated resources by the DSO AP during DSO frame exchanges (i.e. TXOP initiated by an ICF for DSO), is referred to as a DSO subband for that non-AP STA.

20 MHz-only UHR STAs, 80 MHz operating UHR STAs, and 160 MHz operating UHR STAs can be DSO non-AP STAs. The DSO ICF-ICR exchange and the PPDUs following it shall only be transmitted between UHR STAs. The following rules apply to DSO subbands:

— For a 20 MHz-only non-AP STA, only the secondary 20 MHz channel of a 40 MHz PPDU (in a 40 MHz, 80 MHz, 160 MHz, or 320 MHz BSS) or the secondary 20 MHz channel of an 80 MHz PPDU (in an 80 MHz, 160 MHz, or 320 MHz BSS) shall be a DSO subband.

— For an 80 MHz operating non-AP STA:

- The secondary 80 MHz channel in 160 MHz BSS shall be a DSO subband.
- Only one of the 80 MHz subbands outside of the primary 80 MHz in 320 MHz BSS (i.e. either the secondary 80 MHz channel, lower 80 MHz of secondary 160 MHz channel, or upper 80 MHz of secondary 160 MHz channel) shall be a DSO subband,
- A 320 MHz AP can assign any one of the three possible 80 MHz DSO subbands (i.e. secondary 80 MHz channel, lower 80 MHz of secondary 160 MHz channel, or upper 80 MHz of secondary 160MHz channel) to an 80 MHz non-AP STA.

— For a 160 MHz operating non-AP STA, the secondary 160 MHz channel in 320 MHz BSS shall be a DSO subband.

A UHR non-AP STA that supports DSO and intends to enable DSO, disable DSO or update the parameters of DSO mode shall follow the procedure defined in (#4374, 4752, 4998, 5225, 6394, 6709, 7711, 7723, 8923, 10573, 11425, 12202, 12532)37.31 (Procedure for operating mode and parameter updates). A UHR non-AP STA shall include the following parameters in the OMP request sent to enable DSO or update the parameters of DSO mode for the non-AP STA:

— The DSO Padding Delay field, which indicates the minimum MAC padding duration that is required by a DSO non-AP STA in an ICF to cause the non-AP STA to switch from the primary subband to the DSO subband,

— The DSO Switch Back Delay field, which indicates the time required by the DSO non-AP STA to switch from the DSO subband to the primary subband,

— If the non-AP STA's bandwidth is 80 MHz and (#6717)the BSS bandwidth is 320 MHz, the Preferred 80 MHz DSO Subband field, which indicates the non-AP STA's preferred 80 MHz DSO subband.

NOTE—For a non-AP STA to enable DSO mode, the associated AP must support DSO (see (#4752)37.31 (Procedure for operating mode and parameter updates)).

The associated AP shall accept the DSO enablement request and then follow the procedure defined in (#4752)37.31 (Procedure for operating mode and parameter updates), except when an 80 MHz non-AP STA is enabling DSO mode with a 320 MHz BSS AP. In that case, the following procedure shall be used for 80 MHz DSO subband assignment and mode enablement, or for updating the 80 MHz DSO subband(#6720, 10393):

— The non-AP STA indicates (#5237)one preferred 80 MHz DSO subband in the Preferred 80 MHz DSO (#5237)Subband field in the (#6716, 10575)UHR OMP request to enable DSO mode.

— The DSO AP shall select the offered 80 MHz DSO subband for the non-AP STA.

- (#6722)If the AP's offered 80 MHz DSO subband is the same as the non-AP STA's preferred 80 MHz DSO subband,
  - The AP shall accept the DSO enablement request and follow the procedure defined in (#4752)37.31 (Procedure for operating mode and parameter updates).
  - The Offered 80 MHz DSO Subband field shall not be included in the (#6721, 10575)UHR OMP response, if the AP transmits the (#6716, 10575)UHR OMP response.

Copyright © 2025 IEEE. All rights reserved.
This is an unapproved IEEE Standards Draft, subject to change.

- (#6719)If the AP's offered 80 MHz DSO subband is different from the non-AP STA's preferred 80 MHz DSO subband,
  - The AP shall accept the DSO enablement request and transmit the (#6716, 10575)UHR OMP response before the expiration of the transition timeout; the enablement shall be confirmed by the non-AP STA through the UHR OMP confirm transmission(#5703, 6723). The (#4377, 6700, 7716, 12534, 10605, 9477)AP shall include the Reconfiguration Multi-link element to indicate the offered 80 MHz DSO subband in the Offered 80 MHz DSO Subband field in the (#6716, 10575)UHR OMP response. (#4377, 6700, 7716, 12534, 10605, 9477)The AP shall set the fields of the Reconfiguration Multi-Link element in the UHR OMP response as follows:
    - Set all fields in the Presence Bitmap field of the Reconfiguration Multi-Link element to 0
    - Include in the Link Info field of the Reconfiguration Multi-Link element, a Per-STA Profile subelement corresponding to each 320 MHz link on which the DSO AP is offering 80 MHz DSO subband, with the fields set as follows:
      1) The Link ID field of the STA Control field of each Per-STA Profile subelement shall be set to the link identifier of the link.
      2) The Reconfiguration Operation Type field in the STA Control field of each Per-STA Profile subelement shall be set to 5 (UHR Operation Mode and Parameters Update (see 9.4.2.323.4 (Reconfiguration Multi-Link element))).
      3) The DSO Info Present field in the STA Control field shall be set to 1.
      4) All other fields in the STA Control field shell be set to 0.
      5) The Offered 80 MHz DSO Subband field shall be included in the STA Info field.
  - (#6719, 12222)The non-AP STA that receives the (#6716, 10575)UHR OMP response shall transmit a UHR OMP confirm that carries Reconfiguration Multi-Link element. (#12224)The UHR OMP confirm shall be a UHR Link Reconfiguration Notify frame with the Type field value set to 4.(#6724, 8059, 6719, 12222) The non-AP STA shall set the fields of the Reconfiguration Multi-Link element in the UHR OMP confirm as follows:
    - Set all fields in the Presence Bitmap field of the Reconfiguration Multi-Link element to 0
    - Include in the Link Info field of the Reconfiguration Multi-Link element, a Per-STA Profile subelement corresponding to each 320 MHz link on which the DSO non-AP STA is accepting or rejecting the offered 80 MHz DSO subband, with the fields set as follows:
      1) The Link ID field of the STA Control field of each Per-STA Profile subelement shall be set to the link identifier of the link.
      2) The Reconfiguration Operation Type field in the STA Control field of each Per-STA Profile subelement shall be set to 5 (UHR Operation Mode and Parameters Update (see 9.4.2.323.4 (Reconfiguration Multi-Link element))).
      3) The DSO Info Present field in the STA Control field shall be set to 1.
      4) All other fields in the STA Control field shell be set to 0.
      5) The DSO Confirmation field shall be included in the STA Info field. If the non-AP STA rejects the 80 MHz DSO subband offered by the AP, it shall set the Status field of the DSO Confirmation field to 0; in this case, DSO mode is not enabled. If non-AP STA accepts the 80 MHz DSO subband offered by the AP, it shall set the Status field of the DSO Confirmation field to 1 when it is ready to operate in the offered 80 MHz DSO subband; in this case, DSO mode is enabled immediately after the acknowledgment to the UHR OMP confirm.

(#6710)A DSO AP shall not assign a DSO subband to a DSO non-AP STA if the DSO AP has indicated all the 20 MHz subchannels within that DSO subband as punctured in the Disabled Subchannel Bitmap field of the EHT Operation element that the AP transmits.

Copyright © 2025 IEEE. All rights reserved.
This is an unapproved IEEE Standards Draft, subject to change.

If a DSO AP and a DSO non-AP STA operate in DSO mode, the following apply:

1) A DSO AP that initiates a DSO frame exchange that includes neither group addressed Data nor group addressed Management frames and requires the DSO non-AP STA(s) to switch to the DSO subband shall begin the frame exchanges by transmitting a BSRP Trigger frame as the DSO ICF to the DSO non-AP STA with the following limitations:
   - The DSO ICF shall be sent in the non-HT duplicate PPDU format using a rate of 6 Mb/s, 12 Mb/s, or 24 Mb/s.
   - The DSO AP shall set the length of the Padding field of the DSO ICF according to the rules in 37.22 (Use and requirements of initial Control frames), such that the MAC padding duration following the IFCS if required by the DSO non-AP STA is greater than or equal to the DSO padding delay, indicated by the DSO non-AP STA in the DSO Padding Delay field of the most recent successfully transmitted frame for enabling the DSO mode.
   - The number of spatial streams in response to the BSRP Trigger frame as the DSO ICF shall be limited to one for all the scheduled DSO non-AP STAs and shall be indicated in the BSRP Trigger frame.
   - The DSO ICF, MAC padding duration in DSO ICF, and response to DSO ICF shall meet any additional requirements associated with other mechanisms the scheduled non-AP STA is engaged in (e.g., EMLSR, DPS).
   - In the DSO ICF, the AID12 subfield of a User Info field shall be set to the AID of the DSO non-AP STA and the RU Allocation subfield of a User Info field corresponding to the DSO non-AP STA shall be set to an RU assigned to the DSO non-AP STA that is contained in a single DSO subband of the DSO non-AP STA.
   - A DSO AP shall include an IFCS in the DSO ICF if needed by a DSO non-AP STA that is an intended recipient of the DSO ICF.

NOTE 1—An IFCS might not be needed, e.g., if the DSO non-AP STA requires no padding.

2) If a DSO non-AP STA receives a DSO ICF from its DSO AP, where the allocated RU to the DSO non-AP STA is contained in a DSO subband of the DSO non-AP STA, the DSO non-AP STA shall transition to the indicated DSO subband and then transmit the corresponding ICR on the allocated RU a SIFS after the end of the PPDU carrying the DSO ICF. A DSO non-AP STA shall follow the CS mechanism defined in 35.5.2.4 (UL MU CS mechanism for EHT STAs) before transmitting the ICR. A DSO non-AP STA that switches to the DSO subband shall be able to receive frames or be triggered to transmit frames by monitoring at least one 20 MHz in the DSO subband that overlaps with the allocated RU, subject to its spatial stream capabilities and operation mode, in the DSO subband, a SIFS after the end of the PPDU carrying the ICR.

3) A DSO AP shall follow the following rules after the ICF/ICR exchange and until the DSO non-AP STA switches back from the DSO subband to the primary subband:
   - indicate the RU allocations for the DSO non-AP STA with reference to the BSS primary channel in all triggering frames, and
   - indicate the RU allocations for the DSO non-AP STA to be within the DSO subband to which the DSO non-AP STA has switched in all triggering frames and DL MU PPDUs, and
   - not use an MU-RTS or BSRP NTB Trigger frame.

4) The DSO non-AP STA shall switch back from the DSO subband to the primary subband no later than DSO switch back delay, indicated by the DSO non-AP STA in the DSO Switch Back Delay field of the most recent successfully transmitted frame for enabling the DSO mode, as measured from the end of the DSO frame exchanges, which occurs when any of the following conditions is met:
   - The DSO non-AP STA does not receive a PHY-RXSTART.indication primitive during a timeout interval of aSIFSTime + aSlotTime + 20 µs starting at the end of the PPDU transmitted by the DSO non-AP STA as a response to the most recently received frame from the DSO AP or starting at the end of the reception of the PPDU containing a frame for the DSO non-AP STA from the DSO AP that does not require immediate acknowledgement.

Copyright © 2025 IEEE. All rights reserved.
This is an unapproved IEEE Standards Draft, subject to change.

NOTE 2—The 20 µs value is derived from aRxPHYStartDelay duration.

- The DSO non-AP STA receives a PHY-RXSTART.indication primitive during a timeout interval of aSIFSTime + aSlotTime + 20 µs starting at the end of the PPDU transmitted by the DSO non-AP STA as a response to the most recently received frame from the DSO AP or starting at the end of the reception of the PPDU containing a frame for the DSO non-AP STA from the DSO AP that does not require immediate acknowledgement, and the DSO non-AP STA does not detect within the PPDU corresponding to the PHY-RXSTART.indication any of the following frames:
  - An individually addressed frame with the RA equal to the MAC address of the DSO non-AP STA
  - A Trigger frame that has one of the User Info fields addressed to the DSO non-AP STA
  - A CTS frame with the RA equal to the MAC address of the DSO AP
  - A Multi-STA BlockAck frame that has one of the Per AID TID Info fields addressed to the DSO non-AP STA
  - An NDP Announcement frame that has one of the STA Info fields addressed to the DSO non-AP STA
- The DSO non-AP STA does not respond to the most recently received frame from the DSO AP within the DSO frame exchange that requires an immediate response after a SIFS.

5) If no non-AP STA that is assigned resources in the primary 20 MHz subband responds to the DSO ICF and there is at least one response to the DSO ICF from a non-AP STA on any other subband, the AP shall do one of the following:
   - Terminate the DSO frame exchange sequence with all non-AP STAs
   - Continue the DSO frame exchange sequence by ensuring that the primary 20 MHz is occupied

37.27 Fairness considerations for TXOP sharing

This subclause defines a mechanism as part of TXOP sharing to support fairness to neighboring STAs (APs and non-APs).

When a UHR AP that is a TXOP owner allocates a portion of its obtained TXOP to at least one of

— Co-TDMA coordinated AP(s) during a Co-TDMA procedure (see 37.15.2.3 (Coordinated time division multiple access (Co-TDMA))) and

— Associated non-AP STA(s) during a TXS mode 2 procedure (i.e., the one in which the MU-RTS TXS Trigger frame has the TXS Mode subfield value set to 2),

then the total allocated duration shall not exceed the minimum of:

— The TXOP limit the AP advertises to its associated non-AP STAs for AC_VI.

— The TXOP limit the AP advertises to its associated non-AP STAs for the primary AC of that TXOP.

The UHR AP that is a TXOP owner shall not share an obtained TXOP if either of the TXOP limits for the primary AC or for AC_VI that the AP advertises to its associated non-AP STAs is 0.

Within a TXOP in which a UHR AP that is a TXOP owner performs either Co-TDMA or the TXS mode 2 procedure, the AP shall meet all of the following requirements:

— Use the obtained TXOP to exchange at least one Data or Management frame with its associated STA(s) before allocating the TXOP to:
  - Another AP as part of a Co-TDMA procedure; or
  - Associated non-AP STA(s) during a TXS mode 2 procedure.

— Use at least 33% of the duration of the obtained TXOP for frame exchanges with its associated STAs that include at least one Data or Management frame, except if the AP is performing Co-TDMA in

Copyright © 2025 IEEE. All rights reserved.
This is an unapproved IEEE Standards Draft, subject to change.

that TXOP and the AP has a Co-TDMA agreement with every other AP whose Beacon frame is received by the AP on the primary 20 MHz channel at an RSSI no lower than -72 dBm, in which case there is no such constraint.

37.28 Dynamic bandwidth expansion (DBE)

Dynamic bandwidth expansion (DBE) is a mode of operation that allows a UHR AP to dynamically enable operation with an expanded bandwidth that is greater than the BSS bandwidth and up to the AP's maximum supported bandwidth for DBE, for UHR non-AP STAs that support DBE mode. When DBE mode is enabled, the AP (#4383)operates with an expanded operating bandwidth (#4383)for DBE supporting STA, which is referred to as the DBE bandwidth. When DBE mode becomes disabled, the AP no longer operates with (#4383)the DBE bandwidth and operates with the BSS bandwidth.

(#12209, #8531)While an AP has DBE mode enabled, the AP may change the DBE bandwidth to another DBE bandwidth that is greater than the BSS bandwidth. The BSS primary channel does not change due to DBE operations. (#12209)While an AP has DBE mode enabled, the non-AP STAs that do not support DBE mode (#8532)and the non-AP STAs that support DBE mode but have not enabled DBE mode continue to operate with the BSS bandwidth.

A STA that supports DBE mode has dot11DBEOptionActivated equal to true, is called a DBE STA and shall set the DBE Support field of the UHR MAC Capabilities Information field of the UHR Capabilities element to 1. A UHR AP that supports DBE operation is called a DBE AP. A UHR non-AP STA that supports DBE operation is called a DBE non-AP STA.

A DBE AP shall include the DBE Capability Parameters field in the UHR MAC Capabilities Information field in the UHR Capabilities element. The DBE AP shall set the DBE Maximum Supported Bandwidth field (#12287)in the UHR MAC Capabilities Information field in the UHR Capabilities element to indicate its maximum supported bandwidth for DBE. If the DBE AP supports 160 MHz bandwidth for DBE and does not include EHT-MCS Map (BW=160 MHz) field in the EHT Capabilities element, then the DBE AP shall set the EHT-MCS Map (BW=160 MHz) Present field to 1 and include the EHT-MCS Map (BW=160 MHz) field in the DBE Capability Parameters field. If the DBE AP supports 320 MHz bandwidth for DBE and does not include EHT-MCS Map (BW=320 MHz) field in the EHT Capabilities element, then the DBE AP shall set the EHT-MCS Map (BW=320 MHz) Present field to 1 and include the EHT-MCS Map (BW=320 MHz) field in the DBE Capability Parameters field.

A DBE non-AP STA shall indicate support for 40 MHz (#10121)and 80 MHz, 160 MHz and/or 320 MHz as supported (#6131)channel width for DBE by setting the corresponding bandwidth capability field(s) in the VHT, HE and/or EHT Capabilities element. For a DBE non-AP STA, the maximum supported bandwidth for DBE shall be the maximum bandwidth capability indicated by the non-AP STA in the VHT/HE/EHT Capabilities element. The DBE non-AP STA shall include subfields in the Supported EHT-MCS and NSS Set field in the EHT Capabilities element (see (#8278)9.4.2.324.4 (Supported EHT-MCS And NSS Set field)) to provide EHT-MCS Map information for all its supported bandwidths for DBE.

A DBE non-AP STA that intends to enable or disable DBE mode shall follow the procedure defined in 37.31 (Procedure for operating mode and parameter updates). The associated DBE AP shall accept the request and follow the procedure defined in 37.31 (Procedure for operating mode and parameter updates).

A DBE AP shall support receiving enable/disable for DBE mode from a DBE non-AP STA per procedures defined in 37.31 (Procedure for operating mode and parameter updates) both when DBE mode is not enabled and when DBE mode is enabled.

Copyright © 2025 IEEE. All rights reserved.
This is an unapproved IEEE Standards Draft, subject to change.

A (#9282)DBE non-AP STA that intends to enable DBE mode should perform enablement for DBE mode using procedures defined in 37.31 (Procedure for operating mode and parameter updates) even before DBE mode is enabled by the AP.

NOTE—A DBE non-AP STA does not need to enable/disable DBE mode using procedures defined in 37.31 (Procedure for operating mode and parameter updates) every time DBE mode is enabled/disabled/updated by the DBE AP.

A DBE AP that intends to enable, disable or update the parameters of DBE mode shall follow the procedure as defined in 37.32 (Enhanced BSS parameter critical update procedure(#12610)).(#8535)

In the advance notification of (#5227)enhanced critical update to enable DBE mode or to update the DBE parameters for already enabled DBE mode, the DBE AP shall (#6690, #12214)set the parameters in the Mode Specific Parameters field of the UHR Parameters Update element as follows:

— (#12509, 10588, 5710, 12510)The DBE Bandwidth field shall be set to indicate the AP's DBE bandwidth for DBE mode.

— (#10589, #12511)If the DBE Disabled Subchannel Bitmap field is included, it shall be set to indicate disabled 20 MHz subchannels within the DBE bandwidth. The DBE Disabled Subchannel Bitmap field shall satisfy following conditions:

  - (#6689)Disable any 20 MHz subchannel(s) that are indicated as disabled for the BSS bandwidth in the Disabled Subchannel Bitmap field in the EHT Operation element.
  - Not disable any 20 MHz subchannel(s) that are not indicated as disabled for the BSS bandwidth in the Disabled Subchannel Bitmap in the EHT Operation element.
  - (#12512, #10123)The puncturing pattern indicated by the value of the DBE Disabled Subchannel Bitmap field is a valid non-OFDMA puncturing pattern as defined in 35.15.2 (Preamble puncturing operation) and 36.3.12.11.3 (Preamble puncturing for EHT MU PPDUs in a non-OFDMA transmission).

(#10591, 12513, 10588, 12514)When a DBE mode becomes enabled by a DBE AP (i.e. the AP starts operating with an expanded DBE bandwidth), the AP shall set the DBE Enabled field to 1 (#8446, #12508)and shall set the DBE Bandwidth field to indicate the DBE bandwidth in the UHR Operation element in Beacon, Probe Response and (Re)Association Response frames. In this case, the AP shall include the DBE Operation Parameters field in the UHR Operation element in the Probe Response and (Re)Association Response frames. When a DBE mode becomes disabled (i.e. the AP stops operating with an expanded bandwidth for DBE), then the AP shall set the DBE Enabled field to 0 in the UHR Operation element in Beacon, Probe Response and (Re)Association Response frames. In this case, the AP shall not include the DBE Operation Parameters field in the UHR Operation element in the Probe Response and (Re)Association Response frames.

(#12520, #12211)NOTE—All APs of a multiple BSSID set have the same DBE Enabled field value and if DBE mode is enabled then all APs of a multiple BSSID set use the same DBE parameters.

(#12521, #12211)All APs of a cohosted BSSID set shall indicate the same DBE Enabled field value and if DBE mode is enabled then each AP of the same cohosted BSSID set shall indicate the same DBE parameters in the DBE Operation Parameters field that it transmits.

When a DBE AP is operating with DBE mode enabled, the following applies:

— The maximum PPDU bandwidth used by the AP in DL and trigger-based UL for a DBE non-AP STA shall not be more than the minimum of the following bandwidth values:

  - AP’s DBE bandwidth, and
  - non-AP STA’s operating bandwidth.

— The maximum PPDU bandwidth in UL for non-TB PPDU used by a DBE non-AP STA shall not be more than the minimum of the following bandwidth values:

  - AP’s DBE bandwidth, and

Copyright © 2025 IEEE. All rights reserved.
This is an unapproved IEEE Standards Draft, subject to change.

- non-AP STA's operating bandwidth.

37.29 Beacon optimization (#7568)

A UHR AP shall not include the parameters associated with operating modes currently enabled at the AP defined by UHR in the UHR Operation element or any other element carried in the Beacon frame, except when specified otherwise.

NOTE 1—A UHR AP provides the parameters for enabled operating modes defined by UHR in the UHR Operation element carried in the Probe Response, Link Reconfiguration Response, and (Re)Association Response frames that it transmits.

NOTE 2—A UHR AP does not include UHR Capabilities element in a Beacon frame that it transmits. A UHR AP includes the UHR Capabilities element in Probe Response and (Re)Association Response frames that it transmits. A UHR AP includes the UHR Operation element in a Beacon, Probe Response and (Re)Association Response frames that it transmits. A UHR AP includes the Basic UHR-MCS And NSS Set field in the UHR Operation element carried in the Beacon frame it transmits. A UHR AP provides in the UHR Operation element carried in the Beacon, Probe Response and (Re)Association Response frames that it transmits, an indication of which operating modes defined by UHR are currently enabled at the AP.

(#5228, 12217, 10596, 8457)A multi-link probe response shall include the UHR Capabilities element and the UHR Operation element for a reported AP in the per-STA profile of the Basic Multi-Link element corresponding to the reported AP as described in 35.3.4.2 (Use of multi-link probe request and response). If the target AP MLD is accepted during the preparation step (see 37.16.5 (SMD BSS transition preparation procedure)), then the ST preparation response shall include the UHR Capabilities element and the UHR Operation element for each accepted AP affiliated with the target AP MLD in the per-STA profile, of the Basic Multi-Link element, corresponding to each of those affiliated APs. The UHR Operation element carried within the per-STA profile for the above two cases shall include the UHR Operation Parameters field.

(12219, #Ed)NOTE 3—To improve medium efficiency, a UHR non-AP STA is recommended to follow the procedures described in 11.1.4.3.2 (Active scanning procedures for a non-DMG STA) and omit transmission of a Probe Request frame if it receives a Probe Response frame from the intended UHR AP containing the desired information.

NOTE 4—To improve medium efficiency, a UHR AP is recommended to follow the procedures described in 11.1.4.3.4 (Criteria for sending a response) and respond with a broadcast Probe Response frame if it receives a Probe Request frame from a UHR non-AP STA.

37.30 Support for L4S

37.30.1 General

Low-Latency, Low Loss, and Scalable Throughout (L4S) architecture is defined in the IETF (RFCs 9330, 9331, 9332) with the purpose of providing low queuing delays, low packet loss, and fine-grained rate adaptation for latency-sensitive flows.

L4S uses the explicit congestion notification (ECN) field in the IP header to signal early and frequently the occurrence of network congestion to the receiving application. The receiving application relays congestion information back to the sender (e.g. in TCP acknowledgement packets or RTCP reports) and the sender adjusts its sending data rate accordingly. This early congestion notification and fine-grained rate adaptation by the sender minimizes queuing delay and packet drops due to congestion.

In 802.11, MAC layer transmit queues can build up when the ingress rate exceeds the egress rate and when medium access delays occur because of a high level of channel contention. When congestion is experienced at the MAC layer of the AP due to downlink transmit queue build-up, L4S ECN marking can be supported to signal the congestion experienced back to the sender to trigger the sender to adapt its data rate. An MLME interface is defined on the AP to notify the upper layer when congestion is experienced for L4S MSDUs in

Copyright © 2025 IEEE. All rights reserved.
This is an unapproved IEEE Standards Draft, subject to change.

the MAC layer downlink transmit queues. Based on this notification, the upper layer at the AP can perform ECN congestion experienced (CE) marking in the IP header.

NOTE—Proposed enhancements for L4S traffic handling are for the AP side only.

37.30.2 AP operation

An AP that supports L4S operation described in this clause has dot11L4SImplemented equal to true, is called an L4S AP and shall set the L4S field in the Extended Capabilities field of the Extended Capabilities element to 1 in Beacon, Probe Response and (Re)Association Response frames.

An L4S AP shall be capable of identifying L4S MSDUs received from the MAC SAP based on the L4S field in the MA-UNITDATA.request primitive (see 5.2.4 (MA-UNITDATA.request)). The L4S field is used in addition to the priority and/or SCSID fields of the MA-UNITDATA.request for handling of the corresponding MSDU.

An L4S AP should support buffering of L4S MSDUs in shallow queue(s) as per the recommendations in IETF RFC 9330, RFC 9331 and RFC 9332. The specific implementation of queuing for L4S MSDUs is beyond the scope of this standard.

The L4S AP shall initiate the MLME-L4S-CONGESTION-EXPERIENCED.Indication primitive (see 6.5.33.2 (MLME-L4S-CONGESTION-EXPERIENCED.Indication)) to signal to its upper layer that congestion is being experienced in the downlink transmit queues at the MAC layer for L4S MSDUs by setting the Congestion Experienced parameter to true and providing the MSDU Congestion Marking Probability. Upon receiving the MLME-L4S-CONGESTION-EXPERIENCED.Indication primitive, the upper layer performs ECN CE marking in the IP header of subsequent packets to signal congestion experienced by setting ECN = 11. The upper layer takes into consideration the MSDU Congestion Marking Probability value provided by the MAC layer when performing ECN CE marking.

If the congestion for L4S MSDUs is no longer experienced in the downlink transmit queues at the MAC layer, then the L4S AP shall initiate another MLME-L4S-CONGESTION-EXPERIENCED.Indication primitive (see 6.5.33.2 (MLME-L4S-CONGESTION-EXPERIENCED.Indication)) to signal to the upper layer that the congestion for L4S MSDUs has cleared (i.e. congestion is no longer experienced) by setting the Congestion Experienced parameter to false.

NOTE—The conditions and criteria based on which the MAC layer at the AP determines to signal the notifications (via the MLME-L4S-CONGESTION-EXPERIENCED.Indication primitive) for congestion experienced and clearing of congestion for L4S MSDUs to the upper layer is implementation specific and is outside the scope of this specification. Section 5 of RFC 9331 provides general requirements for a network node to support L4S and can be adapted for implementation in the MAC.

37.31 Procedure for operating mode and parameter updates

The procedure defined in this subclause allows a UHR non-AP MLD to enable or disable one or more of the following modes of operation or update the parameters associated with those mode(s) for the non-AP MLD or its affiliated non-AP STA(s) operating on any enabled link that is setup between the non-AP MLD and its associated AP MLD.

— DPS (see 37.17.1 (Dynamic power save (DPS) operation))
— NPCA (see 37.18 (Non-primary channel access (NPCA)))
— DUO (see 37.19.2 (Dynamic (#7566)unavailability operation (DUO) mode))
— DSO with exceptions as defined in 37.26 (Dynamic subband operation (DSO)(#7567))
— P-EDCA (see 37.6 (Prioritized EDCA (P-EDCA)(#6086)))
— ELR Reception (see 37.10.2 (Enhanced long range (ELR) operation))

Copyright © 2025 IEEE. All rights reserved.
This is an unapproved IEEE Standards Draft, subject to change.

— AOM (see 37.19.5 (Adaptive operation mode))
— LLI (see 37.24 (Low-latency indication (LLI)))
— Co-BF (see 37.15.2.1 (Coordinated beamforming (Co-BF)))
— Co-SR (see 37.15.2.2 (Coordinated spatial reuse (Co-SR)))
— EMLSR (see 37.21 (Enhanced multi-link single-radio (EMLSR) operation for a UHR non-AP MLD))
— (#5417)DBE (see 37.28 (Dynamic bandwidth expansion (DBE)))

A non-AP MLD shall transmit, via an affiliated non-AP STA, to its associated AP MLD, a(#5037, 5881, 9005) UHR OMP request to enable or disable one or more UHR modes of operation for the non-AP MLD or one or more affiliated non-AP STAs operating on enabled link(s). If a UHR mode of (#4669, 5080, 5667, 5759, 7049, 8266, 8925, 10126, 10629, 12291, 7418)operation is not supported by the AP MLD, then the non-AP MLD shall not request to enable that mode for the non-AP MLD. If a UHR mode of opera-tion is not supported by an AP affiliated with an AP MLD, then the non-AP MLD shall not request to enable that mode for the non-AP STA operating on the corresponding AP's link.

A non-AP MLD may update the parameters associated with one or more enabled UHR modes for the non-AP MLD or one or more of its affiliated non-AP STAs by transmitting a(#9005) UHR OMP request.

In the same UHR OMP request, the non-AP MLD may request the enablement/disablement and update of parameters for multiple mode(s) and for multiple non-AP STA(s) that are affiliated with the same non-AP MLD.

The UHR OMP request shall be a UHR Link Reconfiguration Request frame with the Type field in the frame set to 3.

In a(#9005) UHR OMP request to enable, disable, or update the parameters of the UHR mode(s), the non-AP MLD shall include a Reconfiguration Multi-Link element.

— If the UHR OMP request is to enable, disable, or update parameters of one or more of the following modes:
  - DPS, NPCA, DUO, DSO, P-EDCA, ELR Reception, AOM, LLI, Co-BF, Co-SR, or (#5417, Ed)DBE.
— then the non-AP MLD shall:(#4394)
  - set all fields in the Presence Bitmap field of the Reconfiguration Multi-Link element to 0
  - include in the Link Info field of the Reconfiguration Multi-Link element, a Per-STA Profile sub-element for each link on which the non-AP MLD intends to enable, disable, or update the parameters of the requested UHR mode(s), with the fields set as follows:
    - The Link ID field of the STA Control field of each Per-STA Profile subelement shall be set to the link identifier of the link on which the non-AP MLD is requesting to enable, disable, or update the parameters of the mode(s).
    - The Reconfiguration Operation Type field of the STA Control field of each Per-STA Profile subelement shall be set to 5 (UHR Operating(#4671) Mode and Parameters Update).
    - All other fields in the STA Control field shall be set to 0.
    - A UHR Mode Change element shall be included in the STA Profile field of each Per-STA Profile subelement
      — The UHR Mode Change element shall include a Mode Tuple field for each mode that is requested to be enabled or disabled or for which a parameter (#4672, 5669, 7050, 10630)update is requested for the corresponding link.
— If the UHR OMP request is to enable, disable, or update the parameters of the EMLSR mode then the non-AP MLD shall:(#4395)
  - set all fields in the Presence Bitmap field of the Reconfiguration Multi-Link element to 0

Copyright © 2025 IEEE. All rights reserved.
This is an unapproved IEEE Standards Draft, subject to change.

- include in the Link Info field of the Reconfiguration Multi-Link element, one Per-STA Profile subelement(#7052, 10631) with the Link ID field of the STA Control field set to value 15 and other fields set as follows(#6440, 7051, 10632):
  - The Reconfiguration Operation Type field of the STA Control field of the Per-STA (#4673, 7053, 10633)Profile subelement shall be set to 5 (UHR Operating(#4674) Mode and Parameters Update).
  - All other fields in the STA Control field shall be set to 0.
  - A UHR Mode Change element shall be included in the STA Profile field of the Per-STA Profile subelement
    - — The UHR Mode Change element shall include a Mode Tuple field for EMLSR.
      - The EMLSR Link Bitmap field shall indicate the EMLSR link(s)

A non-AP MLD shall not include a Mode Tuple field corresponding to a mode in the UHR(#5410) OMP request if the non-AP MLD does not intend to enable, disable, or update parameters corresponding to that mode.

NOTE—See 37.6 (Prioritized EDCA (P-EDCA)(#6086)), 37.17.1 (Dynamic power save (DPS) operation), 37.18 (Non-primary channel access (NPCA)), 37.19.2 (Dynamic (#7566)unavailability operation (DUO) mode), 37.19.5 (Adaptive operation mode), 37.24 (Low-latency indication (LLI)), 37.10.2 (Enhanced long range (ELR) operation), 37.15.2.1 (Coordinated beamforming (Co-BF)), 37.15.2.2 (Coordinated spatial reuse (Co-SR)), (#5417)37.21 (Enhanced multi-link single-radio (EMLSR) operation for a UHR non-AP MLD), and 37.28 (Dynamic bandwidth expansion (DBE))) for details on whether there are parameters associated with the modes and if so, the set of parameters that are included by the non-AP STA in the UHR OMP request.

An AP MLD that receives, via an affiliated AP, the UHR OMP request from an associated non-AP MLD to enable, disable or update the parameters of one or more UHR modes should successfully(#4675, 5670, 6441, 7054, 10127, 10634) transmit the UHR OMP response on an enabled link where the corresponding non-AP STA affiliated with the non-AP MLD is in awake state:

— after all applicable AP(s) affiliated with the AP MLD is (are) ready to serve their associated non-AP STA(s) affiliated with that non-AP MLD in the requested mode(s) of operation and the requested parameters (if any), and

— within a transition timeout interval that starts at the end of the PPDU carrying the acknowledgment to the UHR OMP request and that is initialized to the value carried in the UHR Operating Mode And Parameters Update Timeout field of the AP MLD's UHR Capabilities element.

The UHR OMP response shall be a UHR Link Reconfiguration Notify frame with the Type field in the frame set to 3.

A non-AP MLD that sends a(#5882) UHR OMP request to enable, disable, or update the parameters of UHR mode(s) for the non-AP MLD or its affiliated non-AP STA(s) shall have its affiliated non-AP STA(s) start operating with the mode(s) as indicated in the UHR OMP request on the corresponding link(s) with the indicated parameters (if applicable) immediately after sending an acknowledgement to the UHR OMP response received from the associated AP MLD or at the expiration of the transition timeout, whichever comes first. Until the expiration of the transition timeout or until the non-AP MLD receives the UHR OMP response, whichever comes first, the non-AP MLD shall not transmit another UHR OMP request.

An AP MLD that receives a(#9005) UHR OMP request to enable, disable, or update the parameters of UHR mode(s) for the associated non-AP MLD or affiliated non-AP STA(s) of the associated non-AP MLD shall have its affiliated AP(s) start serving the non-AP STA(s) with the mode(s) as indicated in the UHR OMP request on the corresponding link(s) with the indicated parameters (if applicable) immediately after receiving an acknowledgement to the UHR OMP response transmitted by the associated AP MLD or at the expiration of the transition timeout, whichever comes first. Until the AP MLD receives the acknowledgement to the UHR OMP response or until the transition timeout expires, whichever comes first, the corresponding AP(s) affiliated with the AP MLD shall serve the corresponding non-AP STA(s) on the corresponding link(s) according to the previously indicated mode(s) and parameter(s) (if applicable).

Copyright © 2025 IEEE. All rights reserved.
This is an unapproved IEEE Standards Draft, subject to change.

37.32 Enhanced BSS parameter critical update procedure(#12610)

37.32.1 Enhanced critical update events

The following events about the BSS parameters of an AP shall be classified(#8006) as an enhanced critical update:

— Insertion of the UHR Parameters Update element

(#12243, Ed)NOTE—A UHR AP is an EHT AP and follows the procedures described in 35.3.10 (BSS parameter critical update procedure) and 35.3.11 (ML procedures for (extended) channel switching and channel quieting). A UHR AP does not set the Critical Update Flag or the Nontransmitted BSSIDs Critical Update Flag in the Capabilities Information field (see 9.4.1.4 (Capability Information field)) if none of the events listed in 11.2.3.14 (TIM Broadcast) or conditions described in 35.3.6.2 (Adding affiliated AP(s)), 35.3.6.3 (Removing affiliated AP(s)) or 35.3.7.2.4 (Advertised TTLM in Beacon and Probe Response frames) are satisfied.

37.32.2 Advance notification of updates to operation modes and parameters

37.32.2.1 Operations requiring advance notification

The following operations, when intended to be performed by an AP, require an advance notification procedure defined in 37.32.2.2 (Procedure for advance notification):

— The AP is a mobile AP and intends to enable, disable, or update one or more parameters for DPS operation on the mobile AP (see 37.17.2 (Mobile AP's DPS operation)), or

— Enable, disable, or update one or more parameters for NPCA (see 37.18 (Non-primary channel access (NPCA))), or

— Enable, disable, or update one or more parameters for DBE (see 37.28 (Dynamic bandwidth expansion (DBE))), or

— Update the parameter MaxStandaloneDuoBSRP for the DUO mode (see 37.19.2 (Dynamic (#7566)unavailability operation (DUO) mode))

— Enable, disable, or update one or more parameters for P-EDCA (see 37.6 (Prioritized EDCA (P-EDCA)(#6086))), or

— Enable, disable, or update one or more parameters for AP PUO (see 37.19.4 (AP PUO mode)), or

— Enable or disable reception of UHR(#6237) ELR PPDUs (see 37.10.2 (Enhanced long range (ELR) operation)).

(#12514, #9285)The operation shall take effect on the AP at the TBTT indicated by the Countdown Timer field in the UHR Parameters Update element (see 9.4.2.360 (UHR Parameters Update element)).

(#8535, #9284)After the operation for enablement or parameters update for a UHR mode has taken effect, the AP shall continue operating in that UHR mode with the indicated parameters until a subsequent change to that UHR mode takes effect using the advance notification procedure defined in 37.32.2.2 (Procedure for advance notification).

37.32.2.2 Procedure for advance notification

If an AP (affected AP) intends to perform one or more of the operations defined in 37.32.2.1 (Operations requiring advance notification), then a reporting AP shall include the UHR Parameters Update element in the Beacon, Probe Response, Link Reconfiguration Response, and (Re)Association Response frames that the reporting AP transmits by following the rules described in this subclause(#8459) and shall provide the indication of the enhanced critical update as defined in 37.32.3 (Indication of enhanced critical updates), if the reporting AP meets any of the following conditions:

— The reporting AP is the affected AP, or

— The reporting AP is affiliated with the same AP MLD as the affected AP

Copyright © 2025 IEEE. All rights reserved.
This is an unapproved IEEE Standards Draft, subject to change.

— The reporting AP is the transmitted BSSID of a multiple BSSID set and the affected AP is a nontransmitted BSSID of this multiple BSSID set

— The reporting AP is the transmitted BSSID of a multiple BSSID set and the affected AP is affiliated with the same AP MLD as a nontransmitted BSSID of this multiple BSSID set

In the UHR Parameters Update element carried by the reporting AP corresponding to the affected AP, the reporting AP shall include a Mode Tuple field corresponding to each mode defined in 37.32.2.1 (Operations requiring advance notification) and for which the affected AP intends to enable, disable, or update the parameters. (#12509, #10588, #5710)If the affected AP intends to enable a mode, then the reporting AP shall set the Mode Enable field to 1 in the Mode Tuple field for the corresponding mode. If the affected AP intends to update the parameters for a mode, then the reporting AP shall set Mode Enable field and the Mode Update field to 1 in the Mode Tuple field for the corresponding mode. When applicable for an operation, while enabling or updating parameters for a mode, in the Mode Tuple field, the reporting AP shall include the parameters corresponding to the mode in the applicable Mode Specific Parameters field. (#10591, #12513, #10588)If the affected AP intends to disable a mode, then the reporting AP shall set the Mode Enable field to 0 in the Mode Tuple field for the corresponding mode. The reporting AP shall not include a Mode Tuple field corresponding to a mode that is not enabled, disabled, or for which no parameter is updated.

On the link on which the affected AP operates:

— If the affected AP is not part of a multiple BSSID set or if the affected AP is the transmitted BSSID in a multiple BSSID set and the frame is a Beacon, (Re)Association Response, Link Reconfiguration Response or Probe Response frame(#8459), then the reporting AP is the same as the affected AP and

- (#8459)The UHR Parameters Update element carrying the updates for the affected AP shall be included outside of any Multiple BSSID element and Basic Multi-Link element.

— (#8459)If the affected AP is a nontransmitted BSSID in a multiple BSSID set and the frame is a Beacon frame or a Probe Response frame, then the reporting AP is the transmitted BSSID of that multiple BSSID set and

- The UHR Parameters Update element carrying the updates for the affected AP shall be included in the Nontransmitted BSSID Profile subelement, corresponding to the affected AP, of the Multiple BSSID element.

— (#8459)If the affected AP is a nontransmitted BSSID in a multiple BSSID set and the frame is a (Re)Association Response or a Link Reconfiguration Response frame, then the reporting AP is the same as the affected AP and

- (#8459)The UHR Parameters Update element carrying the updates for the affected AP shall be included outside the Basic Multi-Link element

(#8459)NOTE—For the case where the affected AP is the nontransmitted BSSID, the UHR Parameters Update element carrying the updates for the affected AP is not included within the Basic Multi-Link element carried in nontransmitted BSSID profile of the affected AP.

On other link(s) of the AP MLD with which the affected AP is affiliated:

— If the reporting AP is the AP (AP 2) affiliated with the same AP MLD as the affected AP and if AP 2 is not part of a multiple BSSID set or is the transmitted BSSID in a multiple BSSID set and the frame is a Beacon frame or Probe Response frame(#8459).

- (#8459)The UHR Parameters Update element carrying the updates for the affected AP shall be carried in the per-STA profile corresponding to the affected AP of the Basic Multi-Link element

— If the reporting AP is the transmitted BSSID of the multiple BSSID set and if the AP (AP 3) affiliated with the same AP MLD as the affected AP is a nontransmitted BSSID of the multiple BSSID set and the frame is a Beacon frame or a Probe Response frame(#8459).

- The UHR Parameters Update element carrying the updates for the affected AP shall be carried in the per-STA profile corresponding to the affected AP of the Basic Multi-Link element that is

Copyright © 2025 IEEE. All rights reserved.
This is an unapproved IEEE Standards Draft, subject to change.

included in the Nontransmitted BSSID Profile corresponding to AP 3 of the Multiple BSSID element.

— (#8459)If the reporting AP is the AP (AP 2) affiliated with the same AP MLD as the affected AP and the frame is a (Re)Association Response or Link Reconfiguration Response frame.
  - (#8459)The UHR Parameters Update element carrying the updates for the affected AP shall be carried in the per-STA profile corresponding to the affected AP of the Basic Multi-Link element.

(#8459)NOTE—For the case where the frame is a (Re)Association Response or Link Reconfiguration Response frame, or the reporting AP is the transmitted BSSID or not part of multiple BSSID set and the frame is Beacon or Probe Response frame, the Basic Multi-Link element is carried outside the Multiple BSSID element (if present).

The reporting AP shall start including the UHR Parameters Update element in its Beacon, Probe Response, (#8459)Link Reconfiguration Response, and (Re)Association Response frames a duration of dot11UHRParamUpdateAdvNotificationInterval before the operation defined in 37.32.2.1 (Operations requiring advance notification) is scheduled to occur and shall include the element until and including the DTIM Beacon immediately following the TBTT at which the operation occurs.

Following the DTIM Beacon immediately after the TBTT at which the operation occurs, the reporting AP may include the UHR Parameters Update element in its Beacon (#8459)and Probe Response frames for an additional dot11UHRParamUpdatePostNotificationInterval beacon intervals and shall not include the UHR Parameters Update element thereafter, until the next initiation of the advance notification procedure.

The value of dot11UHRParamUpdateAdvNotificationInterval is fixed for all APs affiliated with an AP MLD and should be selected to be sufficiently large so that all non-AP STAs associated with the affected AP, including those in the power save mode, have the opportunity to successfully receive the UHR Parameters Update element before the updates take effect.

37.32.3 Indication of enhanced critical updates

This subclause describes the (#12241)signaling details for enhanced critical updates procedures defined for UHR STAs.

A UHR AP affiliated with an AP MLD shall initiate the advanced notification procedure as described in 37.32.2 (Advance notification of updates to operation modes and parameters) when there is an update to a UHR defined mode of operation for either of the two cases:

— The update pertains to the AP MLD with which the AP is affiliated, or to any AP affiliated with the same AP MLD as the AP.

— The AP corresponds to the transmitted BSSID in a multiple BSSID set, and the update pertains to:
  - The AP MLD with which any of the nontransmitted BSSIDs in that set is affiliated, or
  - Any AP affiliated with the same AP MLD as one of the nontransmitted BSSIDs in that set.

At the TBTT when an AP affiliated with an AP MLD initiates the advanced notification procedure for the cases described above, the AP shall in the Beacon frame it transmits:

— Set to 1 the Enhanced Critical Updates Flag of the Capability Information field.

— Include the Critical Updates Indicator field within the Partial Virtual Bitmap field of the TIM element and:
  - Carry a value of 1 in the Critical(#4007) Update Type field of the Critical Updates Indicator field.
  - Increment by 1 (modulo 16) the value carried in the Critical Update Counter field of the Critical Updates Indicator field.

Copyright © 2025 IEEE. All rights reserved.
This is an unapproved IEEE Standards Draft, subject to change.

— Increment by 1 (modulo 16) the value carried in the Enhanced BSS Parameter Change Count field corresponding to each affected AP, carry a value of 1 in the Critical Update Type field corresponding to each affected AP and set to 1 the Enhanced All Updates Included field.
  - The Enhanced BSS Parameter Change Count, Critical Update Type and the Enhanced All Updates Included fields are carried in the Enhanced Critical Updates Information field which is present in the TBTT Information field of the Reduced Neighbor Report element if the affected AP is a colocated(#5918) UHR AP.
  - The Enhanced BSS Parameter Change Count, Critical Update Type and the Enhanced All Updates Included fields are carried in the Enhanced Critical Updates Information field contained in the Common Info field of the Basic Multi-Link element if the affected AP is the transmitting AP or if the affected AP is the AP corresponding to the nontransmitted BSSID in the same multiple BSSID set as the transmitting AP.
  - The Enhanced BSS Parameter Change Count (#8459)field is carried in the Enhanced Critical Updates Information field contained in the STA Info field of the Basic Multi-Link element carried in a (Re)Association Response or Link Reconfiguration Response frame.

— Include(#10001) the UHR Parameter Update element in the Beacon frame as described in 37.32.2.2 (Procedure for advance notification).

NOTE 1—The Enhanced BSS Parameter Change Count field corresponding to all the APs affiliated with an AP MLD are incremented when there is an update to the parameters for a UHR defined mode of that AP MLD.

NOTE 2—The Critical Update Counter field of the Critical Updates Indicator field of the TIM element is incremented only once if there are updates occurring simultaneously to more than one mode of operation at an AP and/or at more than one AP and/or at more than one AP MLD in a multiple BSSID set.

Upon initiation, an AP shall perform the advanced notification procedure for a duration specified in the Parameter Update Adv Notification Interval field of the UHR Capabilities element.

(#8459)When a critical update procedure is underway as described in 37.32.2.2 (Procedure for advance notification) for a reported AP affiliated with an AP MLD, a reporting AP affiliated with the same AP MLD shall include the Enhanced Critical Updates Information field in the STA Info field, corresponding to the reported AP, of the Basic Multi-Link element carried in a (Re)Association Response or Link Reconfiguration Response frame when the reported AP is part of the ML setup or corresponds to the added link respectively. The Critical Update Type field in the Enhanced Critical Updates Information field shall be set to 1 and the Enhanced All Updates Included field in the Enhanced Critical Updates Information field shall be set to 1.

While the advanced notification procedure is in progress at an AP affiliated with an AP MLD, and until the DTIM Beacon transmitted by that AP following the TBTT at which the update takes effect (inclusive), the AP shall, in the Beacon frame it transmits:

— Set to 1 the Enhanced Critical Updates Flag of the Capability Information field.

— Carry a value of 1 in the Critical(#4007) Update Type field of the Critical Updates Indicator field of the TIM element to indicate an update to a UHR defined mode of operation.

— Carry the latest updated value in the Critical Update Counter field of the Critical Updates Indicator field of the TIM element.

— Carry a value of 1 in the Critical Update Type field in the corresponding to each affected.

— Carry the last updated value for the corresponding AP in the corresponding Enhanced BSS Parameter Change Count field.

— Set to 1 the Enhanced All Updates Included field for the corresponding AP and includes the UHR Parameter Update element in the Beacon frame as described in 37.32.2.2 (Procedure for advance notification).

Copyright © 2025 IEEE. All rights reserved.
This is an unapproved IEEE Standards Draft, subject to change.

An AP, in the Beacon frames it transmits after the DTIM Beacon immediately following the TBTT at which the critical update takes effect and continuing until the next initiation of an advanced notification procedure, shall:

— Set to 0 the Enhanced Critical Updates Flag of the Capability Information field.
— Carry a value of 1 in the Critical Update Type field corresponding to each affected AP.
— Carry the last updated value for the corresponding AP in the corresponding Enhanced BSS Parameter Change Count field.
— Set to 0 the Enhanced All Updates Included field for the corresponding AP.

An AP, in the Beacon frame it transmits after the duration specified in the Update Indication In TIM Interval field of the UHR Capabilities element has elapsed following the TBTT when the critical update takes effect and continuing until the next initiation of an advanced notification procedure, shall not include the Critical Updates Indicator field in the TIM element unless the first octet carried in the TIM element precedes the Critical Updates Indicator field.

NOTE 3—When the Critical Updates Indicators field is absent in the TIM element, the value carried in the Update Counter field is preserved.

Copyright © 2025 IEEE. All rights reserved.
This is an unapproved IEEE Standards Draft, subject to change.

Figure 37-8 (Enhanced Critical Updates Mechanism(#4007, 11426, 12620)) summarizes the operation outlined in this subclause.

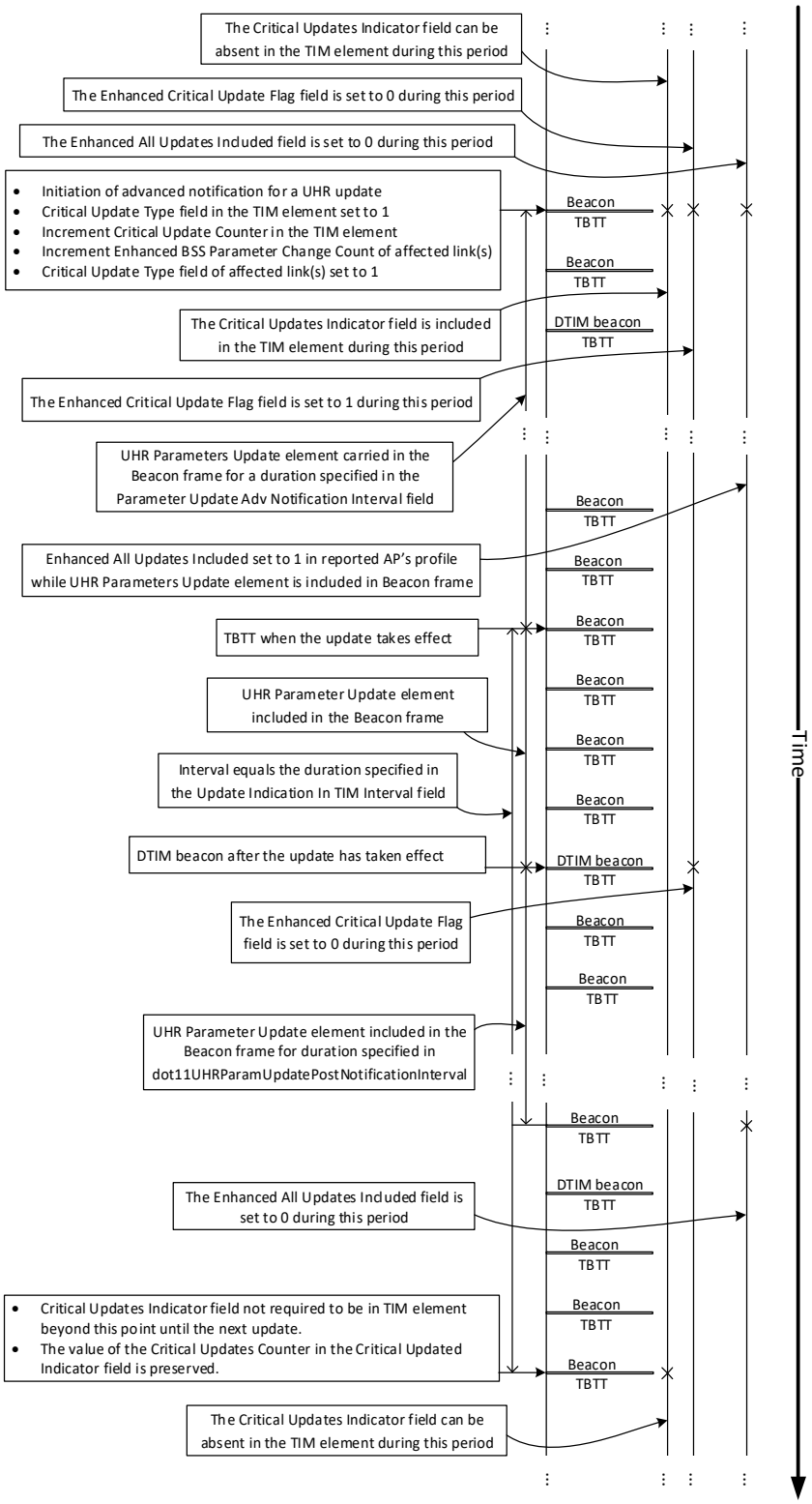

Figure 37-8—Enhanced Critical Updates Mechanism(#4007, 11426, 12620)

Copyright © 2025 IEEE. All rights reserved.
This is an unapproved IEEE Standards Draft, subject to change.

A non-AP MLD, that has performed multi-link setup with an AP MLD shall maintain a record for the most recently received enhanced BSS parameters change count value for each associated UHR AP affiliated with the AP MLD and shall retrieve the most recent UHR operational parameters for an AP's BSS when the value of the enhanced BSS parameters change count for that AP is different from the previously received value.

37.33 Bounded and BTM-assured ESSs, and mobile APs

If an AP MLD is able to provide a complete list of the primary channels used by all the other AP MLDs in the ESS it is a member of whose BSAs overlap with the BSA of the AP MLD, if any, it shall set the Bounded ESS field in the UHR Capabilities elements it transmits to 1, and shall include in the (Re)Association Response frames it transmits one or more AP Channel Report elements that give this list of channels. Otherwise, it shall set the Bounded ESS field to 0 and shall not include any AP Channel Report elements in the (Re)Association Response frames.

NOTE 1—A non-AP STA might use this information to optimize scans for other APs of the same ESS, by only scanning those channels.

NOTE 2—In the case where the AP MLD is operating the only BSSs in the ESS (e.g. a mobile AP MLD or a single residential AP MLD), there is only one AP Channel Report element, and it has a zero-length Channel List field (and an arbitrary Operating Class field). In this case, a non-AP STA might use this information to abstain from performing any scans for other APs of the same ESS.

If an AP can and does use BSS transition management to ensure all associated STAs that support BSS transition management are proactively steered, using BSS transition management, to an optimal AP in the ESS, it shall set the BTM Assurance field in the UHR Capabilities elements it transmits to 1, shall use BSS transition management to ensure that all associated STAs are proactively steered to an optimal AP in the ESS, and shall not transmit a BSS Transition Management Request frame with the Disassociation Imminent field set to 1 unless at least one of the BSS Termination Included, ESS Disassociation Imminent and Link Removal Imminent fields is set to 1, or the non-AP STA has not followed a previous BSS Transition Management Request frame with the Disassociation Imminent field set to 0. Otherwise, it shall set the BTM Assurance field to 0.

NOTE 3—The means by which the AP determines at all times an optimal AP for the STA are outside the scope of the standard. The AP might provide information to the STA to justify a proposed BSS transition management steer.

NOTE 4—A non-AP STA might use this information to abstain from performing any scans for other APs of the same ESS.

If a STA is an AP that is not fixed with respect to its immediate surroundings, it should set the Mobile AP bit in the Extended Capabilities elements it transmits to 1. Otherwise, it shall not set this bit to 1.

NOTE 5—A non-AP STA might use this information to determine how frequently to scan for that AP's presence.

Copyright © 2025 IEEE. All rights reserved.
This is an unapproved IEEE Standards Draft, subject to change.

38. Ultra-high reliability (UHR) PHY specification

38.1 Introduction

38.1.1 Introduction to the UHR PHY

Clause 38 (Ultra-high reliability (UHR) PHY specification) specifies the PHY entity for an ultra-high reliability (UHR) orthogonal frequency division multiplexing (OFDM) system. In addition to the requirements in Clause 38 (Ultra-high reliability (UHR) PHY specification), a UHR STA shall be capable of transmitting and receiving PPDUs that are compliant with the mandatory requirements of Clause 36 (Extremely high throughput (EHT) PHY specification), Clause 27 (High Efficiency (HE) PHY specification), Clause 21 (Very High Throughput (VHT) PHY specification), Clause 19 (High Throughput (HT) PHY specification), and Clause 17 (Orthogonal frequency division multiplexing (OFDM) PHY specification).

For 2.4 GHz band operation, the UHR PHY is based on the EHT PHY defined in Clause 36 (Extremely high throughput (EHT) PHY specification), which is further based on the HE PHY defined in Clause 27 (High Efficiency (HE) PHY specification), the HT PHY defined in Clause 19 (High Throughput (HT) PHY specification), and the OFDM PHY defined in Clause 17 (Orthogonal frequency division multiplexing (OFDM) PHY specification) and Clause 18 (Extended Rate PHY (ERP) specification).

For 5 GHz band operation, the UHR PHY is based on the EHT PHY defined in Clause 36 (Extremely high throughput (EHT) PHY specification), which is further based on the HE PHY defined in Clause 27 (High Efficiency (HE) PHY specification), the VHT PHY defined in Clause 21 (Very High Throughput (VHT) PHY specification), the HT PHY defined in Clause 19 (High Throughput (HT) PHY specification), and the OFDM PHY defined in Clause 17 (Orthogonal frequency division multiplexing (OFDM) PHY specification).

For 6 GHz band operation, the UHR PHY is based on the EHT PHY defined in Clause 36 (Extremely high throughput (EHT) PHY specification), which is further based on the HE PHY defined in Clause 27 (High Efficiency (HE) PHY specification), and the OFDM PHY defined in Clause 17 (Orthogonal frequency division multiplexing (OFDM) PHY specification).

The UHR PHY continues support for DL OFDMA, UL OFDMA, DL MU-MIMO, and UL MU-MIMO as defined in Clause 36 (Extremely high throughput (EHT) PHY specification). Preamble puncturing as defined in Clause 36 (Extremely high throughput (EHT) PHY specification) continues to be supported for the UHR MU PPDU, for both OFDMA and non-OFDMA.

The UHR PHY continues support for modulation of data subcarriers using the EHT MCS set, which comprises BPSK, QPSK, 16-QAM, 64-QAM, 256-QAM, 1024-QAM, and 4096-QAM modulation orders and FEC coding (BCC and LDPC) with code rates of 1/2, 2/3, 3/4, and 5/6. Additionally, the UHR PHY defines four new MCS values for new combinations of existing modulation orders and coding rates, specifically MCS 17 for QPSK with 2/3 code rate, MCS 19 for 16-QAM with 2/3 code rate, MCS 20 for 16-QAM with 5/6 code rate and MCS 23 for 256-QAM with 2/3 code rate. The UHR PHY introduces support for a new larger LDPC codeword size of 3888 bits that may be used in addition to the existing LDPC codeword sizes specified in Clause 36 (Extremely high throughput (EHT) PHY specification).

The UHR PHY provides support for unequal modulation in beamformed multistream MIMO, in which different spatial streams within a PPDU can use different modulation orders. This new feature is designed to improve data rates in MIMO channels where imbalances in per-stream SNR exist and can be used alongside the existing method of equal modulation transmit beamforming, as defined in the EHT PHY.

Copyright © 2025 IEEE. All rights reserved.
This is an unapproved IEEE Standards Draft, subject to change.

The UHR PHY continues support for the OFDM symbol numerology, tone plans, RUs and MRUs specified for the EHT PHY as defined in Clause 36. Additionally, the UHR PHY defines distributed-tone_RUs (DRUs), which use separate OFDM tone plans where the RU occupies non-consecutive distributed physical subcarriers, that are designed to provide power and range benefits for STAs operating in frequency bands with power spectrum density limits. DRUs are only allowed to be used in uplink UHR TB PPDUs.

The UHR PHY provides support for a new enhanced long range (ELR) PPDU format, designed to overcome link budget imbalances between the uplink and downlink, and to improve spectrum efficiency for STAs operating further away from APs. ELR PPDUs have a fixed bandwidth of 20 MHz and can be used for downlink and uplink in 2.4 GHz band operation, and only for the uplink in 5 GHz and 6 GHz band operation.

The UHR PHY provides support for coordinated beamforming and coordinated spatial reuse to improve spectrum efficiency and system reliability through multiple-AP coordination.

The UHR PHY provides support for an interference mitigation mode to enable receivers to estimate interference and mitigate its impacts.

A UHR AP may support the following features:

— Co-BF sequential and joint UHR sounding as defined in 37.14 (UHR Co-BF sounding operation) if AP supports Co-BF.

A non-AP UHR STA shall support the following features:

— Responding with requested beamforming feedback in a UHR Co-BF sequential and/or joint. sounding procedure with up to 4 spatial streams in the EHT sounding NDP if the non-AP STA supports Co-BF.

38.1.2 Scope

The services provided to the MAC by the UHR PHY consist of the following protocol functions:

a) A function that maps the PSDU received from the MAC into a PPDU for transmission to one or more receiving STAs.

b) A function that defines the characteristics and method of transmitting and receiving data through a wireless medium between two or more STAs. Depending on the PPDU format, these STAs support a mixture of UHR, Clause 36 (Extremely high throughput (EHT) PHY specification), Clause 27 (High efficiency (HE) PHY specification), Clause 21 (Very high throughput (VHT) PHY specification), Clause 19 (High-throughput (HT) PHY specification), Clause 18 (Extended Rate PHY (ERP) specification), Clause 17 (Orthogonal frequency division multiplexing (OFDM) PHY specification), Clause 16 (High rate direct sequence spread spectrum (HR/DSSS) PHY specification), and Clause 15 (DSSS PHY specification for the 2.4 GHz band designated for ISM applications) PHYs.

38.1.3 UHR PHY functions

38.1.3.1 General

The UHR PHY contains two functional entities: the PHY function, and the physical layer management function (i.e., the PLME). These functions are described in detail in 38.3 (UHR PHY) and 38.4 (UHR PLME). The UHR PHY service is provided to the MAC through the PHY service primitives defined in Clause 8

Copyright © 2025 IEEE. All rights reserved.
This is an unapproved IEEE Standards Draft, subject to change.

(PHY service specification). The UHR PHY service interface is described in 38.2 (UHR PHY service interface).

38.1.3.2 PHY management entity (PLME)

The PLME performs management of the local PHY functions in conjunction with the MLME.

38.1.3.3 Service specification method

The models represented by figures and state diagrams are intended to be illustrations of the functions provided. It is important to distinguish between a model and a real implementation. The models are optimized for simplicity and clarity of presentation.

The service of a layer is the set of capabilities that it offers to a user in the next higher layer. Abstract services are specified here by describing the service primitives and parameters that characterize each service. This definition is independent of any particular implementation.

38.1.4 PPDU formats

The structure of the PPDU transmitted by a UHR STA is determined by the TXVECTOR parameters as defined in 38-1 (TXVECTOR and RXVECTOR parameters).

The FORMAT parameter determines the overall structure of the PPDU and can take on one of the following values:

— Non-HT format (NON_HT), based on Clause 17 (Orthogonal frequency division multiplexing (OFDM) PHY specification) or Clause 18 (Extended Rate PHY (ERP) specification), and including non-HT duplicate format based on 38.3.18 (Non-HT duplicate transmission).
— HT-mixed format (HT_MF) as specified in Clause 19 (High Throughput (HT) PHY specification).
— HT-greenfield format (HT_GF) as specified in Clause 19 (High Throughput (HT) PHY specification).
— VHT format (VHT) as defined in Clause 21 (Very High Throughput (VHT) PHY specification).
— HE SU PPDU format (HE_SU) as defined in Clause 27 (High Efficiency (HE) PHY specification).
— HE ER SU format (HE_ER_SU) as defined in Clause 27 (High Efficiency (HE) PHY specification).
— HE MU PPDU format (HE_MU) as defined in Clause 27 (High Efficiency (HE) PHY specification).
— HE TB PPDU format (HE_TB) as defined in Clause 27 (High Efficiency (HE) PHY specification).
— EHT MU PPDU format (EHT_MU) as defined in Clause 36 (Extremely high throughput (EHT) PHY specification).
— EHT TB PPDU format (EHT_TB) as defined in Clause 36 (Extremely high throughput (EHT) PHY specification).
— UHR MU PPDU format (UHR_MU) that carries one or more PSDUs to one or more users as defined in 38.3.7 (UHR PPDU formats).
— UHR TB PPDU format (UHR_TB) that carries a single PSDU and is sent in response to a PPDU that carries a triggering frame as defined in 38.3.7 (UHR PPDU formats).
— UHR ELR PPDU format (UHR_ELR) that carries a single PSDU in enhanced long range operation as defined in 38.3.7 (UHR PPDU formats).

Copyright © 2025 IEEE. All rights reserved.
This is an unapproved IEEE Standards Draft, subject to change.

38.2 UHR PHY service interface

38.2.1 Introduction

The UHR PHY provides an interface to the UHR MAC through an extension of the generic PHY service interface defined in 8.3.4 (Basic service and options). The interface includes TXVECTOR, RXVECTOR, PHYCONFIG_VECTOR, and TRIGVECTOR.

The UHR MAC uses the TXVECTOR to supply the UHR PHY with per-PPDU transmit parameters. The UHR PHY uses the RXVECTOR to inform the UHR MAC of the received PPDU parameters. The UHR MAC uses the PHYCONFIG_VECTOR to configure the UHR PHY for operation that is independent of PPDU transmission or reception. The UHR MAC uses the TRIGVECTOR to configure the UHR PHY to receive UHR TB PPDUs over each assigned RU, MRU or DRU.

38.2.2 TXVECTOR and RXVECTOR parameters

The parameters in Table 38-1 (TXVECTOR and RXVECTOR parameters) are defined as part of the TXVECTOR parameter list in the PHY-TXSTART.request primitive for PPDU transmitting and/or as part of the RXVECTOR parameter list in the PHY-RXSTART.indication and PHY-RXEND.indication primitives for PPDU receiving. A UHR STA may receive a PPDU that contains the L-STF, L-LTF, L-SIG, RL-SIG, and U-SIG fields, but has a PHY Version Identifier field in the U-SIG field other than 0 or 1. In such cases, for forward compatibility, it shall still report the information from the version independent fields in the U-SIG field within the RXVECTOR. A value of PHY_VER_UNKNOWN is defined in the RXVECTOR parameter FORMAT to indicate such a PPDU format. When the RXVECTOR parameter FORMAT is PHY_VER_UNKNOWN, the RXVECTOR contains only six parameters - FORMAT, RSSI_LEGACY, CH_BANDWIDTH, TXOP_DURATION, BSS_COLOR, and UPLINK_FLAG.

Copyright © 2025 IEEE. All rights reserved.
This is an unapproved IEEE Standards Draft, subject to change.

Table 38-1—TXVECTOR and RXVECTOR parameters

Parameter	Condition	Value	TXVECTOR	RXVECTOR
FORMAT		Determines the format of the PPDU. Enumerated type: NON_HT indicates Clause 15, Clause 16, Clause 17, Clause 18, or non-HT duplicate PPDU format. In this case, the modulation is determined by the NON_HT_MODULATION parameter defined in Table 19-1 (TXVECTOR and RXVECTOR parameters). HT_MF indicates HT-mixed format. HT_GF indicates HT-greenfield format. VHT indicates VHT format. HE_SU indicates HE SU PPDU format. HE_MU indicates HE MU PPDU format. HE_ER_SU indicates HE ER SU PPDU format. HE_TB indicates HE TB PPDU format. EHT_MU indicates EHT MU PPDU format. EHT_TB indicates EHT TB PPDU format. UHR_MU indicates UHR MU PPDU format. UHR_TB indicates UHR TB PPDU format. UHR_ELR indicates UHR ELR PPDU format. PHY_VER_UNKNOWN indicates a PPDU format that contains the L-STF, L-LTF, L-SIG, RL-SIG and U-SIG fields, and has the PHY Version Identifier field in the U-SIG field set to a Validate value. Refer to Table 38-23 (U-SIG field of a UHR MU PPDU), Table 38-25 (U-SIG field of a UHR TB PPDU) and Table 38-26 (U-SIG field of a UHR ELR PPDU) The enumerated type PHY_VER_UNKNOWN is not used in the TXVECTOR.	Y	Y

Copyright © 2025 IEEE. All rights reserved.
This is an unapproved IEEE Standards Draft, subject to change.

Table 38-1—TXVECTOR and RXVECTOR parameters *(continued)*

Parameter	Condition	Value	TXVECTOR	RXVECTOR
PPDU_TYPE	FORMAT is UHR_MU and UPLINK_FLAG is 0	Set to 0 to indicate a DL OFDMA transmission (including non-MU-MIMO and MU-MIMO). Set to 1 to indicate a UHR SU transmission not addressed to an AP or a DL SU Co-SR transmission. Set to 2 to indicate a DL non-OFDMA MU-MIMO transmission or a DL non-OFDMA Co-BF transmission. Other values are reserved.	Y	Y
	FORMAT is UHR_MU and UPLINK_FLAG is 1	Set to 1 to indicate a UHR SU transmission addressed to an AP. Other values are reserved.	Y	Y
	FORMAT is UHR_ELR	Set to 3 to indicate a UHR ELR PPDU. Other values are reserved.	O	O
	FORMAT is UHR_TB	Set to 0.	O	O
	Otherwise	See corresponding entry in Table 36-1 (TXVECTOR and RXVECTOR parameters).		
L_LENGTH	FORMAT is UHR_MU or UHR_ELR	Not present. NOTE—The LENGTH field of the L-SIG field for EHT MU PPDU is defined in Equation (38-8) using the TXTIME value defined in 38.4.3 (TXTIME and PSDU_LENGTH calculation), which in turn depend on other parameters including the TXVECTOR parameter APEP_LENGTH.	N	N
	FORMAT is UHR_TB	Indicates the value used to calculate the LENGTH field of the L-SIG field. See 38.3.15.5 (L-SIG) for details. The value of this parameter comes from the triggering frame to which the UHR TB PPDU is the response (see 9.3.1.22.2 (Common Info field) for details).	Y	N
	Otherwise	See corresponding entry in Table 19-1 (TXVECTOR and RXVECTOR parameters), Table 21-1 (TXVECTOR and RXVECTOR parameters), Table 27-1 (TXVECTOR and RXVECTOR parameters), or Table 36-1 (TXVECTOR and RXVECTOR parameters)..		
N_TX	FORMAT is UHR_MU, UHR_ELR, or UHR_TB	Indicates the number of transmit chains.	Y	N
	Otherwise	See corresponding entry in Table 21-1 (TXVECTOR and RXVECTOR parameters), Table 27-1 (TXVECTOR and RXVECTOR parameters), or Table 36-1 (TXVECTOR and RXVECTOR parameters).		

Copyright © 2025 IEEE. All rights reserved.
This is an unapproved IEEE Standards Draft, subject to change.

Table 38-1—TXVECTOR and RXVECTOR parameters *(continued)*

Parameter	Condition	Value	TXVECTOR	RXVECTOR
EXPANSION_MAT	FORMAT is UHR_MU or UHR_ELR, and APEP_LENGTH > 0	For each user, contains a vector in the number of all the subcarriers in an RU or MRU that is assigned to this user. The vector for each subcarrier contains feedback matrices as defined in 36.3.17.2 (EHT beamforming feedback matrix V) based on the channel measured during the training symbols of previous EHT sounding NDPs, HE sounding NDPs or VHT NDPs.	MU	N
	FORMAT is EHT_TB	Contains a vector in the number of all the subcarriers in an RU or MRU that is assigned to this user. The vector for each subcarrier contains feedback matrices as defined in 36.3.17.2 (EHT beamforming feedback matrix V) based on the channel measured during the training symbols of previous EHT sounding NDPs, HE sounding NDPs or VHT NDPs.	O	N
	Otherwise	See corresponding entry in Table 21-1 (TXVECTOR and RXVECTOR parameters), Table 27-1 (TXVECTOR and RXVECTOR parameters), or Table 36-1 (TXVECTOR and RXVECTOR parameters).		
NO_SIG_EXTN	FORMAT is UHR_MU, UHR_ELR, or UHR_TB	Indicates whether signal extension needs to be applied at the end of transmission. Boolean: true indicates that no signal extension is present. false indicates that a signal extension is present.	Y	N
	Otherwise	See corresponding entry in Table 21-1 (TXVECTOR and RXVECTOR parameters), Table 27-1 (TXVECTOR and RXVECTOR parameters), or Table 36-1 (TXVECTOR and RXVECTOR parameters).		
GI_TYPE	FORMAT is UHR_MU, UHR_ELR, or UHR_TB	Indicates the length of the GI for the EHT-LTF and Data fields. Enumerated type: 0u8s_GI indicates 0.8 µs. 1u6s_GI indicates 1.6 µs. 3u2s_GI indicates 3.2 µs. NOTE—The length of GI for pre-UHR modulated fields is 0.8 µs	Y	Y
	Otherwise	See corresponding entry in Table 21-1 (TXVECTOR and RXVECTOR parameters), Table 27-1 (TXVECTOR and RXVECTOR parameters), or Table 36-1 (TXVECTOR and RXVECTOR parameters).		
FEC_CODING	FORMAT is UHR_MU, UHR_ELR, or UHR_TB	Indicates the FEC encoding used. Enumerated type: BCC_CODING indicates BCC coding. LDPC_CODING indicates LDPC coding.	MU	MU
	Otherwise	See corresponding entry in Table 27-1 (TXVECTOR and RXVECTOR parameters), or Table 36-1 (TXVECTOR and RXVECTOR parameters).		

Copyright © 2025 IEEE. All rights reserved.
This is an unapproved IEEE Standards Draft, subject to change.

Table 38-1—TXVECTOR and RXVECTOR parameters *(continued)*

Parameter	Condition	Value	TXVECTOR	RXVECTOR
LDPC_EXTRA_SYMBOL	FORMAT is UHR_MU, UHR_ELR, or UHR_TB	Indicates the presence of the LDPC extra symbol segment in an EHT TB PPDU. Integer: 1 indicates that an LDPC extra symbol segment is present. 0 indicates that an LDPC extra symbol segment is not present.	Y	N
	Otherwise	See corresponding entry in Table 27-1 (TXVECTOR and RXVECTOR parameters), or Table 36-1 (TXVECTOR and RXVECTOR parameters).		
TXPWR_LEVEL_INDEX	FORMAT is EHT_MU or EHT_TB	The allowed values for the TXPWR_LEVEL_INDEX parameter are in the range 1 to *N*/2, where *N* is the number of octets in dot11TxPowerLevelExtended. This parameter is used to indicate which of the available transmit power levels defined in dot11TxPowerLevelExtended shall be used for the current transmission.	Y	N
	Otherwise	See corresponding entry in Table 27-1 (TXVECTOR and RXVECTOR parameters), or Table 36-1 (TXVECTOR and RXVECTOR parameters).		
RSSI	FORMAT is UHR_MU, UHR_ELR, or UHR_TB	The allowed values for the RSSI parameter are in the range 0 to 255 inclusive. This parameter is a measurement by the PHY of the power observed at the antennas used to receive the current PPDU measured during the reception of the UHR-LTF field. RSSI is intended to be used in a relative manner, and it is a monotonically increasing function of the received power.	N	Y
	Otherwise	See corresponding entry in Table 27-1 (TXVECTOR and RXVECTOR parameters), or Table 36-1 (TXVECTOR and RXVECTOR parameters).		
RSSI_LEGACY	FORMAT is UHR_MU, UHR_ELR, or UHR_TB	The allowed values for the RSSI_LEGACY parameter are in the range 0 to 255 inclusive. This parameter is a measurement by the PHY of the power observed at the antennas used to receive the current PPDU measured during the reception of non-UHR portion of the UHR PPDU preamble. RSSI_LEGACY is intended to be used in a relative manner, and it is a monotonically increasing function of the received power.	N	Y
	Otherwise	See corresponding entry in Table 27-1 (TXVECTOR and RXVECTOR parameters), or Table 36-1 (TXVECTOR and RXVECTOR parameters).		
MCS	FORMAT is UHR_MU or UHR_TB	Indicates the modulation and coding schemes used in the transmission of the Data field of the PPDU. Integer: range 0 to 31. NOTE 1—the values other than 0-13, 15, 17, 19, 20, and 23 are reserved. NOTE 2—for UHR_ELR, the value 0 and 1 are allowed and the rest values are reserved.	MU	MU
	Otherwise	See corresponding entry in Table 19-1 (TXVECTOR and RXVECTOR parameters), Table 21-1 (TXVECTOR and RXVECTOR parameters), Table 27-1 (TXVECTOR and RXVECTOR parameters), or Table 36-1 (TXVECTOR and RXVECTOR parameters).		

Copyright © 2025 IEEE. All rights reserved.
This is an unapproved IEEE Standards Draft, subject to change.

Table 38-1—TXVECTOR and RXVECTOR parameters *(continued)*

Parameter	Condition	Value	TXVECTOR	RXVECTOR
MCS_UHR_SIG	FORMAT is UHR_MU	Indicates the modulation and coding scheme used for the UHR_SIG field. Integer: 0 indicates EHT-MCS 0. 1 indicates EHT-MCS 1. 2 indicates EHT-MCS 3.	Y	N
	Otherwise	Not present.		
CH_BANDWIDTH	FORMAT is UHR_MU, UHR_ELR, or UHR_TB	Indicates the channel width of the PPDU. Enumerated type: CBW20 for 20 MHz. CBW40 for 40 MHz. CBW80 for 80 MHz. CBW160 for 160 MHz. CBW320-1 for 320 MHz-1. CBW320-2 for 320 MHz-2. NOTE—CBW20 is the only valid value for UHR_ELR.	Y	Y
	Otherwise	See corresponding entry in Table 19-1 (TXVECTOR and RXVECTOR parameters), Table 21-1 (TXVECTOR and RXVECTOR parameters), or Table 27-1 (TXVECTOR and RXVECTOR parameters).		
INACTIVE_SUBCHANNELS	FORMAT is UHR_MU, or UHR_ELR, or UHR_TB, or FORMAT is NON_HT and NON_HT_MODULATION is NON_HT_DUP_OFDM	Indicates the 20 MHz subchannels that are punctured. A bitmap indexed by the 20 MHz subchannels in ascending order with the LSB indicating the lowest frequency 20 MHz subchannel. A bit is set to 1 to indicate that the corresponding 20 MHz subchannel is punctured and set to 0 to indicate the corresponding 20 MHz subchannel is not punctured. See 35.11.5 (INACTIVE_SUBCHANNELS) for details.	Y	N
	Otherwise	See corresponding entry in Table 27-1 (TXVECTOR and RXVECTOR parameters) or Table 36-1 (TXVECTOR and RXVECTOR parameters).		
APEP_LENGTH	FORMAT is UHR_MU, UHR_ELR, or UHR_T	indicates the number of octets in the A-MPDU pre-EOF padding (see Table 38-60 (UHR PHY characteristics)) that is carried in the PSDU. Integer range: 0 to aPSDUMaxLength.	MU	N
	Otherwise	See corresponding entry in Table 21-1 (TXVECTOR and RXVECTOR parameters), Table 27-1 (TXVECTOR and RXVECTOR parameters), or Table 36-1 (TXVECTOR and RXVECTOR parameters).		
PSDU_LENGTH	FORMAT is UHR_MU, UHR_ELR, or UHR_TB	Indicates the number of octets in the PSDU in the range 0 to aPSDUMaxLength octets (see Table 38-60 (UHR PHY characteristics)).	N	Y
	Otherwise	See corresponding entry in Table 21-1 (TXVECTOR and RXVECTOR parameters), Table 27-1 (TXVECTOR and RXVECTOR parameters), or Table 36-1 (TXVECTOR and RXVECTOR parameters).		

Copyright © 2025 IEEE. All rights reserved.
This is an unapproved IEEE Standards Draft, subject to change.

Table 38-1—TXVECTOR and RXVECTOR parameters *(continued)*

Parameter	Condition	Value	TXVECTOR	RXVECTOR
NUM_STS	FORMAT is UHR_MU	Indicates the number of spatial streams. Note that the terms "space-time stream" and "spatial streams" are equivalent because STBC is not supported in UHR PPDUs. Integer in the range 1 to 4 per user per MU-MIMO RU or MRU in the TXVECTOR. 1 to 4 per MU-MIMO RU or MRU in the RXVECTOR. 1 to 8 per RU or MRU assigned to single user in the TXVECTOR and RXVECTOR. In each RU or MRU, NUM_STS summed over all users is not greater than 8.	MU	Y
	FORMAT is UHR_TB	Indicates the number of spatial streams. Integer in the range: 1 to 4 for an MU-MIMO RU or MRU. 1 to 8 for an RU or MRU assigned to single user. 1 to 2 for a DRU assigned to single user.	Y	N
	Otherwise	See corresponding entry in Table 21-1 (TXVECTOR and RXVECTOR parameters), Table 27-1 (TXVECTOR and RXVECTOR parameters), or Table 36-1 (TXVECTOR and RXVECTOR parameters).		
TXOP_DURATION	FORMAT is UHR_MU, UHR_ELR, or UHR_TB	Indicates the TXOP duration. Enumerated type or integer: UNSPECIFIED indicates no NAV value specified. 0–8448 indicates a value in units of 1 μs that is used to update the NAV for this TXOP (see 26.2.4 (Updating two NAVs)). The TXOP subfield in U-SIG is computed from the TXVECTOR parameter TXOP_DURATION as follows: TXOP_DURATION = UNSPECIFIED: TXOP = 127. TXOP_DURATION < 512: $TXOP = 2 \times \lfloor TXOP_DURATION / 8 \rfloor$ Otherwise: $TXOP = 2 \times \lfloor (TXOP_DURATION - 512) / 128 \rfloor + 1$. The RXVECTOR parameter TXOP_DURATION is computed from the value of the TXOP subfield in U-SIG as follows: TXOP = 127: TXOP_DURATION = UNSPECIFIED. TXOP is an even number: TXOP_DURATION = 8 × TXOP/2. Otherwise: TXOP_DURATION = 512 + 128 × (TXOP – 1)/2.	Y	Y
	Otherwise	See corresponding entry in Table 27-1 (TXVECTOR and RXVECTOR parameters) or Table 36-1 (TXVECTOR and RXVECTOR parameters).		

Copyright © 2025 IEEE. All rights reserved.
This is an unapproved IEEE Standards Draft, subject to change.

Table 38-1—TXVECTOR and RXVECTOR parameters *(continued)*

Parameter	Condition	Value	TXVECTOR	RXVECTOR
SPATIAL_REUSE	FORMAT is UHR_MU	Indicates the spatial reuse parameter value.	Y	Y
	FORMAT is UHR_TB	Indicates the spatial reuse parameter value.	Y	Y
	FORMAT is UHR_ELR	Not present.		
	Otherwise	See corresponding entry in Table 27-1 (TXVECTOR and RXVECTOR parameters) or Table 36-1 (TXVECTOR and RXVECTOR parameters)..		

Copyright © 2025 IEEE. All rights reserved.
This is an unapproved IEEE Standards Draft, subject to change.

Table 38-1—TXVECTOR and RXVECTOR parameters *(continued)*

Parameter	Condition	Value	TXVECTOR	RXVECTOR
RU_ALLOCATION	FORMAT is UHR_MU and PPDU_TYPE is equal to 0	For the TXVECTOR, indicates the 9-bit RU Allocation-A and RU Allocation-B (if present) subfields in the Common field for a DL OFDMA transmission. 9 bits for a 20 MHz PPDU; 18 bits for a 40 MHz PPDU; 36 bits for an 80 MHz PPDU; 72 bits for every 80 MHz frequency subblock of a 160 MHz PPDU; 144 bits for every 80 MHz frequency subblock of a 320 MHz PPDU. See 38.3.15.9.3 (Common field for OFDMA transmission) for details. For the RXVECTOR, 9 bits are used to indicate the RU or MRU allocated to the user in the whole band using the same encoding of PS160 (B39) and RU Allocation (B12–B19) subfields in the UHR variant User Info field of a Trigger frame. See 9.3.1.22 (Trigger frame format) for details.	Y	Y
	FORMAT is UHR_MU and PPDU_TYPE is not equal to 0, or FORMAT is UHR_ELR,	Not present.		
	FORMAT is UHR_TB	9 bits are used to indicate the RU or MRU allocated to the user in the whole band using the same encoding of PS160 (B39) and RU Allocation (B12–B19) subfields in the UHR variant User Info field of a Trigger frame. See 9.3.1.22 (Trigger frame format) for details.	Y	N
	FORMAT is NON_HT, NON_HT_MODULATION is NON_HT_DUP_OFDM, and CH_BANDWIDTH is not CBW20 or CBW40	For the TXVECTOR, indicates the active RU(s). 36 bits for an 80 MHz PPDU; 72 bits for a 160 MHz PPDU; 144 bits for a 320 MHz PPDU. For each 9 bits, only the following values are allowed: 26 (000011010 in binary representation) 64 (001000000 in binary representation) See 38.3.15.9.3 (Common field for OFDMA transmission) and 38.3.18 (Non-HT duplicate transmission) for details.	O	N
	Otherwise	See corresponding entry in Table 27-1 (TXVECTOR and RXVECTOR parameters) or Table 36-1 (TXVECTOR and RXVECTOR parameters).		

Copyright © 2025 IEEE. All rights reserved.
This is an unapproved IEEE Standards Draft, subject to change.

Table 38-1—TXVECTOR and RXVECTOR parameters *(continued)*

Parameter	Condition	Value	TXVECTOR	RXVECTOR
BEAMFORMED	FORMAT is UHR_MU or UHR_ELR, and UEQM equals to 0	For an RU or MRU with a single user allocated, set to 1 if a beamforming steering matrix is applied to this non-MU MIMO allocation and set to 0 otherwise.	MU	O
	FORMAT is UHR_MU or UHR_ELR, and UEQM equals to 1	Not present	Y	O
	FORMAT is UHR_TB	For an RU or MRU with a single user allocated, set to 1 if a beamforming steering matrix is applied to this non-MU MIMO allocation and set to 0 otherwise.	Y	O
	Otherwise	See corresponding entry in Table 21-1 (TXVECTOR and RXVECTOR parameters), Table 27-1 (TXVECTOR and RXVECTOR parameters), or Table 36-1 (TXVECTOR and RXVECTOR parameters).		
UHR_LTF_TYPE	FORMAT is UHR_MU	Indicates the type of UHR-LTF. Enumerated type: 2×UHR-LTF indicates a 2×UHR-LTF. 4×UHR-LTF indicates a 4× UHR-LTF. See 38.3.15.11 (UHR-LTF) and 38-40 (UHR-LTF type and GI duration combinations for various UHR PPDU formats).	Y	Y
	FORMAT is UHR_TB	Indicates the type of EHT-LTF. Enumerated type: 1×UHR-LTF indicates a 1× UHR-LTF. 2×UHR-LTF indicates a 2× UHR-LTF. 4×UHR-LTF indicates a 4× UHR-LTF. See 38.3.15.11 (UHR-LTF) and 38-40 (UHR-LTF type and GI duration combinations for various UHR PPDU formats).	Y	Y
	Otherwise	Not present.		
NUM_UHR_LTF	FORMAT is UHR_MU or UHR_TB	Indicates the number of OFDM symbols in the UHR-LTF field. Integer in the range 1 to 8. See Table 38-27 (Common field for OFDMA transmission), Table 38-29 (Common field for a UHR SU transmission, DL SU Co-SR transmission, DL non-OFDMA MU-MIMO transmission, and DL non-OFDMA Co-BF transmission), Table 36-37 (Common field for EHT sounding NDP), and 38.3.15.11 (UHR-LTF).	Y	N
	Otherwise	Not present.		
STARTING_STS_NUM	FORMAT is UHR_TB	Set to the starting spatial stream number minus 1 (spatial streams in a given PPDU transmission are numbered starting from 1)	Y	N
	FORMAT is UHR_MU or UHR_ELR	Not present.		
	Otherwise	See corresponding entry in Table 27-1 (TXVECTOR and RXVECTOR parameters) or Table 36-1 (TXVECTOR and RXVECTOR parameters).		

Copyright © 2025 IEEE. All rights reserved.
This is an unapproved IEEE Standards Draft, subject to change.

Table 38-1—TXVECTOR and RXVECTOR parameters *(continued)*

Parameter	Condition	Value	TXVECTOR	RXVECTOR
NOMINAL_ PACKET_PADDING	FORMAT is UHR_MU or UHR_ELR	Indicates the nominal packing padding duration as defined in 37.12 (Nominal packet padding values selection rules). Enumerated type: 0_us for 0 µs; 8_us for 8 µs; 16_us for 16 µs; 20_us for 20 µs.	MU	N
	FORMAT is UHR_TB	Not present.		
	Otherwise	See corresponding entry in Table 27-1 (TXVECTOR and RXVECTOR parameters) or Table 36-1 (TXVECTOR and RXVECTOR parameters).		
TRIGGER_METHOD	FORMAT is UHR_TB	Indicates the method used to trigger this UHR TB PPDU transmission. Enumerated type: TRIGGER_FRAME for Trigger frame. TRS for TRS Control subfield.	Y	N
	FORMAT is UHR_MU or UHR_ELR	Not present.		
	Otherwise	See corresponding entry in Table 27-1 (TXVECTOR and RXVECTOR parameters) or Table 36-1 (TXVECTOR and RXVECTOR parameters).		
DEFAULT_PE_ DURATION	FORMAT is UHR_TB	When TRIGGER_METHOD is TRS, indicates the duration of the PE field to be transmitted. Enumerated type: 0_us for 0 µs; 4_us for 4 µs; 8_us for 8 µs; 12_us for 12 µs; 16_us for 16 µs; 20_us for 20 µs.	Y	N
	FORMAT is UHR_MU or UHR_ELR	Not present.		
	Otherwise	See corresponding entry in Table 27-1 (TXVECTOR and RXVECTOR parameters) or Table 36-1 (TXVECTOR and RXVECTOR parameters).		

Copyright © 2025 IEEE. All rights reserved.
This is an unapproved IEEE Standards Draft, subject to change.

Table 38-1—TXVECTOR and RXVECTOR parameters *(continued)*

Parameter	Condition	Value	TXVECTOR	RXVECTOR
BSS_COLOR	FORMAT is UHR_MU, UHR_ELR, or UHR_TB	Set to a value in the range 0 to 63 (see 37.13.1.4 (BSS_COLOR)). If FORMAT is UHR_MU, the UPLINK_FLAG equals to 0, the PPDU_TYPE equals to 1 and the COSR_DISABLED equals to 0, it indicates the BSS color of the coordinating AP in a DL SU Co-SR transmission. If FORMAT is UHR_MU, the UPLINK_FLAG equals to 0, the PPDU_TYPE equals to 2 and the COBF_DISABLED equals to 0, it indicates the BSS color of the coordinating AP in a DL non-OFDMA Co-BF transmission.(#8969)	Y	Y
	FORMAT is PHY_VER_UNKNOWN	A value in the range 0 to 63 (see 37.13.1.4 (BSS_COLOR)).	N	Y
	Otherwise	See corresponding entry in Table 27-1 (TXVECTOR and RXVECTOR parameters) or Table 36-1 (TXVECTOR and RXVECTOR parameters).		
BSS_COLOR_2	FORMAT is UHR_MU, the UPLINK_FLAG equals to 0, the PPDU_TYPE equals to 1 and the COSR_DISABLED equals to 0(#8969)	Set to a value in the range 1 to 63 (see 37.13.1.4 (BSS_COLOR)) to indicate the BSS color of the coordinated AP in a DL SU (#8969)Co-SR transmission.	Y	Y
	FORMAT is UHR_MU, the UPLINK_FLAG equals to 0, the PPDU_TYPE equals to 2 and the COBF_DISABLED equals to 0(#8969)	Set to a value in the range 1 to 63 (see 37.13.1.4 (BSS_COLOR)) to indicate the BSS color of the coordinated AP in a DL non-OFDMA Co-BF transmission.(#8969)	Y	Y
	Otherwise	Not present		
COSR_DISABLED(#9763, #9764)	FORMAT is UHR_MU, the UPLINK_FLAG equals to 0, and the PPDU_TYPE equals to 1	Indicate whether current PPDU is in a UHR SU transmission or a DL SU Co-SR transmission. Set to 0 to indicate a DL SU Co-SR transmission. Set to 1 to indicate a UHR SU transmission(#9764).	Y	Y
	Otherwise	Not present		

Copyright © 2025 IEEE. All rights reserved.
This is an unapproved IEEE Standards Draft, subject to change.

Table 38-1—TXVECTOR and RXVECTOR parameters *(continued)*

Parameter	Condition	Value	TXVECTOR	RXVECTOR
COBF_DISABLED(#9765, #9766)	FORMAT is UHR_MU, the UPLINK_FLAG equals to 0, and the PPDU_TYPE equals to 2	Indicate whether current PPDU is in a DL non-OFDMA MU-MIMO transmission or a DL non-OFDMA Co-BF transmission. Set to 0 to indicate DL non-OFDMA Co-BF transmission. Set to 1 to indicate DL non-OFDMA MU-MIMO(#9766) transmission.	Y	Y
	Otherwise	Not present		
UPLINK_FLAG	FORMAT is UHR_MU or UHR_ELR	Set to 1 if the PPDU is addressed to an AP. Set to 0 otherwise.	Y	Y
	FORMAT is PHY_VER_UNKNOWN	A value of 1 indicates the PPDU is addressed to an AP. A value of 0 indicates the PPDU is addressed to a non-AP STA.	N	Y
	FORMAT is UHR_TB	Not present.		
	Otherwise	See corresponding entry in Table 27-1 (TXVECTOR and RXVECTOR parameters) or Table 36-1 (TXVECTOR and RXVECTOR parameters).		
STA_ID	FORMAT is UHR_MU or UHR_ELR	Indicates the list of STA-IDs for a UHR MU PPDU (see 37.13.1.1 (STA_ID)).	MU	Y
	FORMAT is UHR_TB or PHY_VER_UNKNOWN	Not present.		
	Otherwise	See corresponding entry in Table 27-1 (TXVECTOR and RXVECTOR parameters) or Table 36-1 (TXVECTOR and RXVECTOR parameters).		
UHR_PRE_FEC_PADDING_FACTOR	FORMAT is UHR_TB	When TRIGGER_METHOD is TRIGGER_FRAME, indicates the pre-FEC padding factor used by the UHR TB PPDU transmission. Integer in the range 0 to 3 0 for a pre-FEC padding factor of 4; 1 for a pre-FEC padding factor of 1; 2 for a pre-FEC padding factor of 2; 3 for a pre-FEC padding factor of 3; Otherwise, not present.	Y	N
	Otherwise	Not present.		
UHR_TB_PE_DISAMBIGUITY	FORMAT is UHR_TB and TRIGGER_METHOD is TRIGGER_FRAME	Indicates PE disambiguity for the UHR TB PPDU transmission. Set to 0 to indicate no PE disambiguity Set to 1 to indicate PE disambiguity	Y	N
	Otherwise	Not present.		

Copyright © 2025 IEEE. All rights reserved.
This is an unapproved IEEE Standards Draft, subject to change.

Table 38-1—TXVECTOR and RXVECTOR parameters *(continued)*

Parameter	Condition	Value	TXVECTOR	RXVECTOR
TB_DISREGARD_IN_USIG1	FORMAT is UHR_TB	Indicates the values to be set for the Disregard field in U-SIG-1. See 37.4.2.2.3 (Allowed settings of the Trigger frame fields and TRS Control subfield).	Y	N
	FORMAT is UHR_MU or UHR_ELR	Not present.		
	Otherwise	See corresponding entry in Table 36-1 (TXVECTOR and RXVECTOR parameters).		
NUM_UHR_SIG_SYM	FORMAT is UHR_MU	Indicates the number of UHR-SIG symbols (see 38.3.15.9 (UHR-SIG)).	Y	N
	Otherwise	Not present.		
TB_VALIDATE_IN_USIG2	FORMAT is UHR_TB	Indicates the values to be set for the Validate field in U-SIG-2. See 38.3.15.7.2 (Content).	Y	N
	Otherwise	Not present.		
TB_DISREGARD_IN_USIG2	FORMAT is UHR_TB	Indicates the values to be set for the Disregard field in U-SIG-2. See 37.4.2.2.3 (Allowed settings of the Trigger frame fields and TRS Control subfield).	Y	N
	FORMAT is UHR_MU or UHR_ELR	Not present.		
	Otherwise	See corresponding entry in Table 36-1 (TXVECTOR and RXVECTOR parameters).		
POWER_BOOST_FACTOR	FORMAT is UHR_MU	For an RU or MRU, set the power boost factor of the occupied RU or MRU according to the rules in 37.13.1.2 (POWER_BOOST_FACTOR).	MR	N
	FORMAT is UHR_TB or UHR_ELR	Not present.		
	Otherwise	See corresponding entry in Table 36-1 (TXVECTOR and RXVECTOR parameters).		
SCRAMBLER_INITIAL_VALUE	FORMAT is UHR_MU or UHR_ELR	Indicates the first 11 bits of the scrambling sequence (the eleven LSB bits of the Scrambler Initialization field prior to descrambling), with the first bit of the scrambling sequence being the LSB of SCRAMBLER_INITIAL_VALUE.	N	Y
	FORMAT is UHR_TB or PHY_VER_UNKNOWN	Not present.		
	Otherwise	See corresponding entry in Table 27-1 (TXVECTOR and RXVECTOR parameters) or Table 36-1 (TXVECTOR and RXVECTOR parameters).		

Copyright © 2025 IEEE. All rights reserved.
This is an unapproved IEEE Standards Draft, subject to change.

Table 38-1—TXVECTOR and RXVECTOR parameters *(continued)*

Parameter	Condition	Value	TXVECTOR	RXVECTOR
UEQM	FORMAT is UHR_MU	Indicates whether EQM or UEQM is used. Set to 0 to indicate EQM is used; Set to 1 to indicate UEQM is used.	MU	Y
	Otherwise	Not present.		
UEQM_PATTERN	FORMAT is UHR_MU	Indicates the UEQM pattern bitmap for the number of spatial streams indicated by NUM_STS. Integer range: 0–3. See Table 38-33 (UEQM pattern subfield encoding) for the definition of the UEQM pattern bitmap.	MU	N
	Otherwise	Not present.		

Further TXVECTOR and RXVECTOR parameters for transmitting or receiving a DSSS, HR/DSSS, OFDM, ERP, HT, VHT, HE or EHT PPDU, as determined by the FORMAT and NON_HT_MODULATION parameters, are defined in:

— DSSS PPDU: Table 15-1 (TXVECTOR parameters) and Table 15-2 (RXVECTOR parameters), excepting the LENGTH and DATARATE parameters

— HR/DSSS PPDU: Table 16-5 (Parameter vectors), excepting the LENGTH and DATARATE parameters

— OFDM PPDU: Table 17-1 (TXVECTOR parameters) and Table 17-2 (RXVECTOR parameters), excepting the LENGTH and DATARATE parameters

— ERP PPDU: Table 18-1 (TXVECTOR parameters) and Table 18-3 (RXVECTOR parameters), excepting the LENGTH and DATARATE parameters

— HT PPDU: Table 19-1 (TXVECTOR and RXVECTOR parameters)

— VHT PPDU: Table 21-1 (TXVECTOR and RXVECTOR parameters)

— HE PPDU: Table 27-1 (TXVECTOR and RXVECTOR parameters)

— EHT PPDU: Table 36-1 (TXVECTOR and RXVECTOR parameters)

NOTE—In the “TXVECTOR” and “RXVECTOR” columns, the following apply:
Y = Present; N = Not present; O = Optional;

MU is only present in the TXVECTOR column for an EHT MU PPDU and indicates that the TXVECTOR parameter is present per user. Parameters specified to be present per user are conceptually supplied as an array of values indexed by *u*, where *u* takes values 0 to the number of users minus 1.

MR is only present in the TXVECTOR column for a UHR MU PPDU and indicates that the TXVECTOR parameter is present per RU or MRU. Parameters specified to be present per RU or MRU are conceptually supplied as an array of values indexed by *r*, where *r* takes values 0 to the number of RU or MRU minus 1.

38.2.3 TRIGVECTOR parameters

The TRIGVECTOR is carried in a PHY-TRIGGER.request primitive and provides the PHY of the AP with the parameters needed to receive a TB PPDU over each assigned RU, MRU or DRU. The parameters in Table 38-2 (TRIGVECTOR parameters) are defined as part of the TRIGVECTOR parameter list in the PHY-TRIGGER.request primitive for receiving a UHR TB PPDU.

Copyright © 2025 IEEE. All rights reserved.
This is an unapproved IEEE Standards Draft, subject to change.

Further TRIGVECTOR parameters for receiving an HE or EHT TB PPDU, as determined by the FORMAT and NON_HT_MODULATION parameters, are defined in:

— HE TB PPDU: Table 27-2 (TRIGVECTOR parameters)

— EHT TB PPDU: Table 36-2 (TRIGVECTOR parameters)

Table 38-2—TRIGVECTOR parameters

Parameter	Value
CH_BANDWIDTH	Indicates the bandwidth in the U-SIG of the expected UHR TB PPDU(s). Enumerated type: CBW20 for 20 MHz. CBW40 for 40 MHz. CBW80 for 80 MHz. CBW160 for 160 MHz. CBW320-1 for 320 MHz, corresponding to 320 MHz-1 defined in 36.3.24.2 (Channelization for 320 MHz channel). CBW320-2 for 320 MHz, corresponding to 320 MHz-2 defined in 36.3.24.2 (Channelization for 320 MHz channel).
UL_LENGTH	Indicates the value of the L-SIG LENGTH field of the expected UHR TB PPDU(s). NOTE—The UL_LENGTH in TRIGVECTOR is equal to the value of the UL LENGTH subfield in a Trigger frame plus 2.
GI_AND_UHR_LTF_TYPE	Indicates the UHR-LTF type and GI duration combination of the expected UHR TB PPDU(s). Enumerated type: 1×UHR-LTF + 1.6 µs GI. 2×UHR-LTF + 1.6 µs GI. 4×UHR-LTF + 3.2 µs GI.
NUM_UHR_LTF_SYMBOLS	Indicates the number of OFDM symbols present in the UHR-LTF field of the expected UHR TB PPDU(s). Set to 0 for 1 OFDM symbol. Set to 1 for 2 OFDM symbols. Set to 2 for 4 OFDM symbols. Set to 3 for 6 OFDM symbols. Set to 4 for 8 OFDM symbols.
LDPC_EXTRA_SYMBOL	Indicates the status of the LDPC extra symbol segment in the expected UHR TB PPDU(s). Set to 1 if LDPC extra symbol segment is present. Set to 0 otherwise.
PRE_FEC_PADDING_FACTOR	Indicates the pre-FEC padding factor for the expected UHR TB PPDU. Value range: Set to 0 to indicate a pre-FEC padding factor of 4. Set to 1 to indicate a pre-FEC padding factor of 1. Set to 2 to indicate a pre-FEC padding factor of 2. Set to 3 to indicate a pre-FEC padding factor of 3.
PE_DISAMBIGUITY	Indicates the PE disambiguity of the expected UHR TB PPDU. Value range: Set to 0 to indicate no PE disambiguity. Set to 1 to indicate PE disambiguity.

Copyright © 2025 IEEE. All rights reserved.
This is an unapproved IEEE Standards Draft, subject to change.

Table 38-2—TRIGVECTOR parameters *(continued)*

Parameter	Value
AID12_LIST	Each entry of AID12_LIST is (12-bit) AID of the corresponding UHR TB PPDU. See the AID12 subfield description in 9.3.1.22.6 (UHR variant User Info field) and (#Ed)Table 9-61 (AID12 subfield encoding) for more information of each entry.
RU_ALLOCATION_LIST	9 bits are used per STA to indicate the RU allocated in the whole bandwidth using the same encoding of PS160 (B39) and RU Allocation (B12–B19) subfields in the UHR variant User Info field of a Trigger frame. See the RU Allocation subfield description in 9.3.1.22.6 (UHR variant User Info field) for more information of each entry.
FEC_CODING_LIST	Each entry of FEC_CODING_LIST indicates the coding type of the corresponding UHR TB PPDU from a UHR STA. See the UL FEC Coding Type and 2xLDPC subfield description in 9.3.1.22.6 (UHR variant User Info field) for more information of each entry.
UHR_MCS_LIST	Each entry of UHR_MCS_LIST indicates the UHR-MCS of the corresponding UHR TB PPDU from a UHR STA. See the UL UHR-MCS subfield description in 9.3.1.22.6 (UHR variant User Info field) for more information of each entry.
SS_ALLOCATION_LIST	Each entry of SS_ALLOCATION_LIST indicates the spatial streams of the corresponding UHR TB PPDU from a UHR STA. See the SS Allocation subfield description in 9.3.1.22.6 (UHR variant User Info field) for more information of each entry.
DRU_LIST	Each entry of DRU_LIST indicates whether a DRU is used in the expected UHR TB PPDU from a UHR STA. Value range: Set to 0 to indicate no DRUs. Set to 1 to indicate DRU is used.
2XLDPC	Each entry of 2XLDPC indicates whether 2XLDPC is used in the expected UHR TB PPDU from a UHR STA. Value range: Set to 0 to indicate no 2XLDPC. Set to 1 to indicate 2XLDPC is used.

38.2.4 PHY CONFIG_VECTOR

The PHYCONFIG_VECTOR carried in a PHY-CONFIG.request primitive for a UHR PHY contains an OPERATING_CHANNEL parameter, which identifies the operating or primary channel. The PHY shall set dot11CurrentPrimaryChannel to the value of this parameter.

The PHYCONFIG_VECTOR carried in a PHY-CONFIG.request primitive for a UHR PHY contains a CHANNEL_WIDTH parameter, which identifies the operating channel width and takes one of the values 20 MHz, 40 MHz, 80 MHz, 160 MHz, and 320 MHz. The PHY shall set dot11UHRCurrentChannelWidth to the value of this parameter.

The PHYCONFIG_VECTOR carried in a PHY-CONFIG.request primitive for a UHR PHY contains a CENTER_FREQUENCY_SEGMENT_0 parameter, which identifies the center frequency of the channel and takes a value between 1 and 255. The PHY shall set dot11UHRCurrentChannelCenterFrequencyIndex0 to the value of this parameter.

Copyright © 2025 IEEE. All rights reserved.
This is an unapproved IEEE Standards Draft, subject to change.

The PHYCONFIG_VECTOR carried in a PHY-CONFIG.request primitive for a UHR PHY contains a DISABLED_SUBCHANNEL_BITMAP parameter, which carries the value of the Disabled Subchannel Bitmap subfield in a UHR Operation element and identifies the 20 MHz subchannels that are punctured in a UHR BSS. The PHY shall set dot11UHRDisabledSubchannelBitmap to the value of this parameter.

The PHYCONFIG_VECTOR carried in a PHY-CONFIG.request primitive for a UHR PHY contains a NPCA_PRIMARY_CHANNEL parameter, which identifies the NPCA primary channel and indicates whether operating on the NPCA primary channel or not. The PHY shall set dot11NPCAPrimaryChannel to the value of this parameter.

38.2.5 Effect of CH_BANDWIDTH parameter on PPDU format

Table 38-3 (Interpretation of FORMAT, NON_HT_MODULATION, and CH_BANDWIDTH parameters) shows the valid combinations of the FORMAT, NON_HT_MODULATION, and CH_BANDWIDTH parameters and the corresponding PPDU format. Other combinations are reserved.

Table 38-3—Interpretation of FORMAT, NON_HT_MODULATION, and CH_BANDWIDTH parameters

FORMAT	NON_HT_ MODULATION	CH_BANDWIDTH	PPDU format
UHR_MU, UHR_ELR, UHR_TB	N/A	CBW20	The STA transmits a UHR PPDU of 20 MHz bandwidth. If the BSS bandwidth is wider than 20 MHz and NPCA is not activated, then the transmission shall use the primary 20 MHz channel. If the BSS bandwidth is wider than 20 MHz and NPCA is activated, then the transmission may use a valid 20 MHz channel within the BSS bandwidth.
UHR_MU, UHR_TB	N/A	CBW40	The STA transmits a UHR PPDU of 40 MHz bandwidth. If the BSS bandwidth is wider than 40 MHz and NPCA is not activated, then the transmission shall use the primary 40 MHz channel. If the BSS bandwidth is wider than 40 MHz and NPCA is activated, then the transmission may use a valid 20 MHz channel within the BSS bandwidth.
UHR_MU, UHR_TB	N/A	CBW80	The STA transmits a UHR PPDU of 80 MHz bandwidth. If the BSS bandwidth is wider than 80 MHz and NPCA is not activated, then the transmission shall use the primary 80 MHz channel. If the BSS bandwidth is wider than 80 MHz and NPCA is activated, then the transmission may use a valid 20 MHz channel within the BSS bandwidth.
UHR_MU, UHR_TB	N/A	CBW160	The STA transmits a UHR PPDU of 160 MHz bandwidth. If the BSS bandwidth is wider than 160 MHz and NPCA is not activated, then the transmission shall use the primary 160 MHz channel. If the BSS bandwidth is wider than 160 MHz and NPCA is activated, then the transmission may use an valid 20 MHz channel within the BSS bandwidth.

Copyright © 2025 IEEE. All rights reserved.
This is an unapproved IEEE Standards Draft, subject to change.

Table 38-3—Interpretation of FORMAT, NON_HT_MODULATION, and CH_BANDWIDTH parameters *(continued)*

FORMAT	NON_HT_ MODULATION	CH_BANDWIDTH	PPDU format
UHR_MU, UHR_TB	N/A	CBW320-1 CBW320-2	The STA transmits a UHR PPDU of 320 MHz bandwidth. NOTE—The CH_BANDWIDTH of CBW320-1 and CBW320-2 is interpreted as 320 MHz bandwidth for the transmission of a UHR PPDU of 320 MHz bandwidth.
NON_HT	OFDM	CBW20	See Table 21-2 (Interpretation of FORMAT, NON_HT_MODULATION, CH_BANDWIDTH, and CH_OFFSET parameters).
NON_HT	NON_HT_DUP_ OFDM	CBW40	See Table 21-2 (Interpretation of FORMAT, NON_HT_MODULATION, CH_BANDWIDTH, and CH_OFFSET parameters).
NON_HT	NON_HT_DUP_ OFDM	CBW80	If INACTIVE_SUBCHANNELS is not present, see Table 21-2 (Interpretation of FORMAT, NON_HT_MODULATION, CH_BANDWIDTH, and CH_OFFSET parameters). If INACTIVE_SUBCHANNELS is present (see 35.11.5 (INACTIVE_SUBCHANNELS) and 26.11.7 (INACTIVE_SUBCHANNELS and RU_ALLOCATION)), the STA transmits a punctured NON-HT PPDU of 80 MHz bandwidth. If the BSS bandwidth is wider than 80 MHz, then the transmission shall use the primary 80 MHz channel. Primary 20 MHz is not punctured.

Copyright © 2025 IEEE. All rights reserved.
This is an unapproved IEEE Standards Draft, subject to change.

Table 38-3—Interpretation of FORMAT, NON_HT_MODULATION, and CH_BANDWIDTH parameters *(continued)*

FORMAT	NON_HT_ MODULATION	CH_BANDWIDTH	PPDU format
NON_HT	NON_HT_DUP_ OFDM	CBW160	If INACTIVE_SUBCHANNELS is not present, see Table 21-2 (Interpretation of FORMAT, NON_HT_MODULATION, CH_BANDWIDTH, and CH_OFFSET parameters). If INACTIVE_SUBCHANNELS is present (see 35.11.5 (INACTIVE_SUBCHANNELS) and 26.11.7 (INACTIVE_SUBCHANNELS and RU_ALLOCATION)), the STA transmits a punctured NON-HT PPDU of 160 MHz bandwidth. If the BSS bandwidth is wider than 160 MHz, then the transmission shall use the primary 160 MHz channel. Primary 20 MHz is not punctured.
NON_HT	NON_HT_DUP_ OFDM	CBW320	If INACTIVE_SUBCHANNELS is not present, the STA transmits a NON-HT PPDU of 320 MHz bandwidth using sixteen adjacent 20 MHz channels as defined in 38.3.18 (Non-HT duplicate transmission). If INACTIVE_SUBCHANNELS is present (see 35.11.5 (INACTIVE_SUBCHANNELS)), the STA transmits a punctured NON-HT PPDU of 320 MHz bandwidth. Primary 20 MHz is not punctured.
HT_MF, HT_GF, VHT, HE_SU, HE_MU, HE_ER_SU, HE_TB, EHT_MU, EHT_TB	See Table 36-3 (Interpretation of FORMAT, NON_HT_MODULATION, CH_BANDWIDTH, and CH_OFFSET parameters), Table 27-4 (Interpretation of FORMAT, NON_HT_MODULATION, CH_BANDWIDTH, and CH_OFFSET parameters), Table 21-2 (Interpretation of FORMAT, NON_HT_MODULATION, CH_BANDWIDTH, and CH_OFFSET parameters), and Table 19-2 (Interpretation of FORMAT, CH_BANDWIDTH, and CH_OFFSET parameters).		

38.2.6 Support for non-HT, HT, VHT, HE, and EHT formats

38.2.6.1 General

When a UHR STA is working on a frequency band that is applicable to a PHY clause, the UHR STA logically contains Clause 15 (DSSS PHY specification for the 2.4 GHz band designated for ISM applications), Clause 16 (High rate direct sequence spread spectrum (HR/DSSS) PHY specification), Clause 17 (Orthogonal frequency division multiplexing (OFDM) PHY specification), Clause 18 (Extended Rate PHY (ERP) specification), Clause 19 (High Throughput (HT) PHY specification), Clause 21 (Very High Throughput (VHT) PHY specification), Clause 27 (High Efficiency (HE) PHY specification), Clause 36 (Extremely high throughput (EHT) PHY specification) and Clause 38 (Ultra-high reliability (UHR) PHY specification) PHYs. The MAC interacts with the PHYs via the Clause 38 (Ultra-high reliability (UHR) PHY specification) PHY service interface, which in turn interacts with the Clause 15 (DSSS PHY specification for the 2.4 GHz band designated for ISM applications), Clause 16 (High rate direct sequence spread spectrum (HR/DSSS) PHY specification), Clause 17 (Orthogonal frequency division multiplexing (OFDM) PHY specification), Clause 18 (Extended Rate PHY (ERP) specification), Clause 19 (High Throughput (HT) PHY specification), Clause 21 (Very High Throughput (VHT) PHY specification), Clause

Copyright © 2025 IEEE. All rights reserved.
This is an unapproved IEEE Standards Draft, subject to change.

27 (High Efficiency (HE) PHY specification) and Clause 36 (Extremely high throughput (EHT) PHY specification) PHY service interfaces when applicable as shown in Figure 38-1 (PHY interaction on transmit for various PPDU formats), Figure 38-2 (PHY interaction on receive for various PPDU formats), and Figure 38-3 (PHY-CONFIG and CCA interaction with various PPDU formats).

Copyright © 2025 IEEE. All rights reserved.
This is an unapproved IEEE Standards Draft, subject to change.

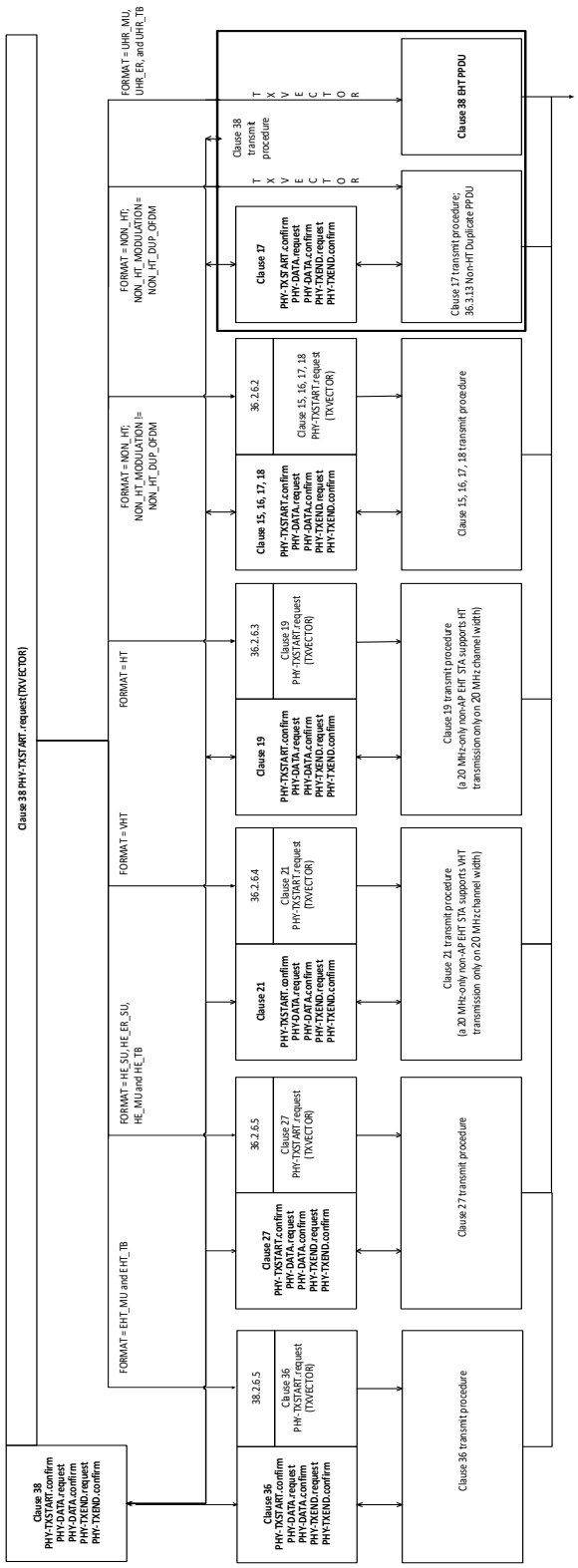

Figure 38-1—PHY interaction on transmit for various PPDU formats

Copyright © 2025 IEEE. All rights reserved.
This is an unapproved IEEE Standards Draft, subject to change.

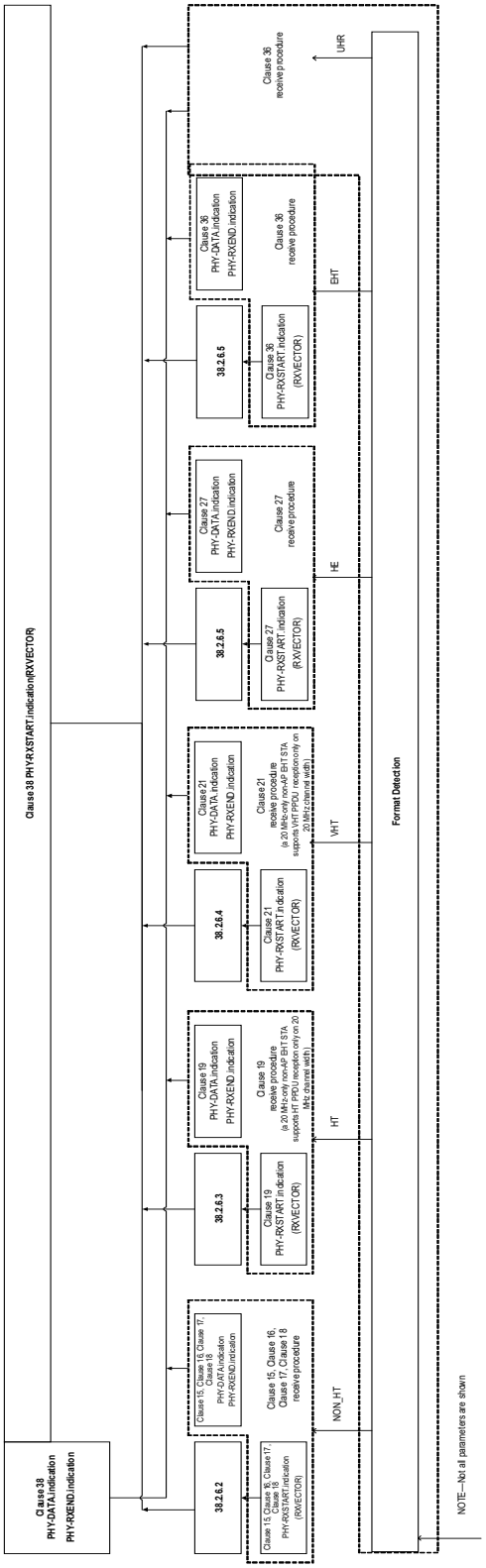

Figure 38-2—PHY interaction on receive for various PPDU formats

Copyright © 2025 IEEE. All rights reserved.
This is an unapproved IEEE Standards Draft, subject to change.

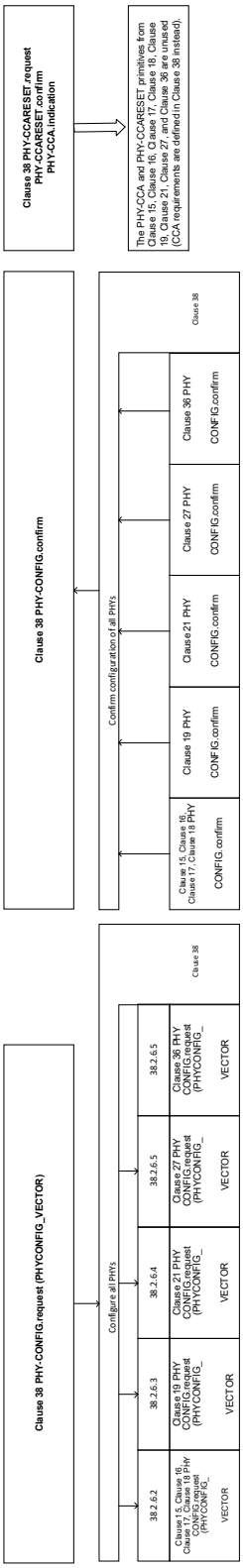

Figure 38-3—PHY-CONFIG and CCA interaction with various PPDU formats

Copyright © 2025 IEEE. All rights reserved.
This is an unapproved IEEE Standards Draft, subject to change.

NOTE—Figure 38-1 (PHY interaction on transmit for various PPDU formats), Figure 38-2 (PHY interaction on receive for various PPDU formats), and Figure 38-3 (PHY-CONFIG and CCA interaction with various PPDU formats) show all possible PHY clauses, not all of which are applicable to any given band.

38.2.6.2 Support for non-HT format

The behavior of the UHR PHY on receipt of a PHY-TXSTART.request(TXVECTOR) primitive with the FORMAT parameter equal to NON_HT and the NON_HT_MODULATION parameter not equal to NON_HT_DUP_OFDM or OFDM is defined in Clause 15 (DSSS PHY specification for the 2.4 GHz band designated for ISM applications), Clause 16 (High rate direct sequence spread spectrum (HR/DSSS) PHY specification), Clause 17 (Orthogonal frequency division multiplexing (OFDM) PHY specification), and Clause 18 (Extended Rate PHY (ERP) specification) and depends on the parameter NON_HT_MODULATION. If the parameter NON_HT_MODULATION is OFDM or NON_HT_DUP_OFDM, then the following additional requirements apply:

— The requirements in 21.3.9.1 (Transmission of 20 MHz non-HT PPDUs with more than one transmit chain)
— The requirements in 21.3.17.1 (Transmit spectrum mask) and 38.3.26.1 (Transmit spectral mask) instead of the requirements in 17.3.9.3 (Transmit spectrum mask)
— The requirements in 36.3.20.3 (Transmit center frequency and symbol clock frequency tolerance) instead of the requirements in 17.3.9.5 (Transmit center frequency tolerance) and 17.3.9.6 (Symbol clock frequency tolerance)
— The requirements in 36.3.20.4.2 (Transmit center frequency leakage) instead of the requirements in 17.3.9.7.2 (Transmitter center frequency leakage)
— The requirements in 36.3.20.2 (Spectral flatness) and the requirements in 17.3.9.7.3 (Transmitter spectral flatness)
— The requirements in 36.3.20.1.3 (Additional restrictions of preamble puncturing for non-HT duplicate PPDU)

The modulation equation for non-HT duplicate transmission is defined in 38.3.18 (Non-HT duplicate transmission).

The EHT TXVECTOR parameters in Table 36-1 (TXVECTOR and RXVECTOR parameters) are mapped to Clause 15 (DSSS PHY specification for the 2.4 GHz band designated for ISM applications), Clause 16 (High rate direct sequence spread spectrum (HR/DSSS) PHY specification), Clause 17 (Orthogonal frequency division multiplexing (OFDM) PHY specification), and Clause 18 (Extended Rate PHY (ERP) specification) TXVECTOR parameters according to Table 38-4 (Mapping of the UHR PHY parameters for non-HT operation). The UHR PHY parameters not listed in the table are not present.

Copyright © 2025 IEEE. All rights reserved.
This is an unapproved IEEE Standards Draft, subject to change.

Table 38-4—Mapping of the UHR PHY parameters for non-HT operation

UHR PHY parameter	2.4 GHz operation defined by Clause 15 (DSSS PHY specification for the 2.4 GHz band designated for ISM applications)	2.4 GHz operation defined by Clause 16 (High rate direct sequence spread spectrum (HR/DSSS) PHY specification)	2.4 GHz operation defined by Clause 18 (Extended Rate PHY (ERP) specification)	5 GHz and 6 GHz operation defined by Clause 17 (Orthogonal frequency division multiplexing (OFDM) PHY specification)	Parameter list
L_LENGTH	LENGTH	LENGTH	LENGTH	LENGTH	TXVECTOR/ RXVECTOR
L_DATARATE	DATARATE	DATARATE	DATARATE	DATARATE	TXVECTOR/ RXVECTOR
TXPWR_LEVEL_INDEX	TXPWR_LEVEL_INDEX	TXPWR_LEVEL_INDEX	TXPWR_LEVEL_INDEX	TXPWR_LEVEL_INDEX	TXVECTOR
RSSI	RSSI	RSSI	RSSI	RSSI	RXVECTOR
RCPI	RCPI	RCPI	RCPI	RCPI	RXVECTOR

The behavior of the UHR PHY on receipt of a PHY-TXSTART.request(TXVECTOR) primitive with the FORMAT parameter equal to NON_HT and the NON_HT_MODULATION parameter equal to NON_HT_DUP_OFDM is defined in 38.3.18 (Non-HT duplicate transmission).

On receipt of a PHY-CONFIG.request(PHYCONFIG_VECTOR) primitive, the UHR PHY behaves as if it were a Clause 15 (DSSS PHY specification for the 2.4 GHz band designated for ISM applications), Clause 16 (High rate direct sequence spread spectrum (HR/DSSS) PHY specification), Clause 17 (Orthogonal frequency division multiplexing (OFDM) PHY specification), or Clause 18 (Extended Rate PHY (ERP) specification) PHY that had received a PHY-CONFIG.request(PHYCONFIG_VECTOR) primitive but without the PHYCONFIG_VECTOR parameters CHANNEL_WIDTH, CENTER_FREQUENCY_SEGMENT_0, and NPCA_PRIMARY_CHANNEL.

As defined in 38.3.29 (UHR receive procedure), once a PPDU is received and detected as a non-HT PPDU, the behavior of the UHR PHY is defined in Clause 15 (DSSS PHY specification for the 2.4 GHz band designated for ISM applications), Clause 16 (High rate direct sequence spread spectrum (HR/DSSS) PHY specification), Clause 17 (Orthogonal frequency division multiplexing (OFDM) PHY specification), or Clause 18 (Extended Rate PHY (ERP) specification) depending on the PPDU format. The RXVECTOR parameters from the Clause 15 (DSSS PHY specification for the 2.4 GHz band designated for ISM applications), Clause 16 (High rate direct sequence spread spectrum (HR/DSSS) PHY specification), Clause 17 (Orthogonal frequency division multiplexing (OFDM) PHY specification), and Clause 18 (Extended Rate PHY (ERP) specification) are directly used, and the PHY parameters not defined in above clauses are not present.

38.2.6.3 Support for HT format

The behavior of a UHR PHY on receipt of a PHY-TXSTART.request(TXVECTOR) primitive with the TXVECTOR parameter FORMAT equal to HT_MF or HT_GF is defined in Clause 19 (High Throughput (HT) PHY specification) with the following additional requirements:

Copyright © 2025 IEEE. All rights reserved.
This is an unapproved IEEE Standards Draft, subject to change.

— The requirements in 21.3.9.2 (Transmission of HT PPDUs with more than four transmit chains)
— The requirements in 38.3.26.3 (Transmit center frequency and symbol clock frequency tolerance) instead of the requirements in 19.3.18.4 (Transmit center frequency tolerance)

The UHR TXVECTOR parameters in Table 38-1 (TXVECTOR and RXVECTOR parameters) are mapped directly to Clause 19 (High Throughput (HT) PHY specification) TXVECTOR parameters in Table 19-1 (TXVECTOR and RXVECTOR parameters). The TXVECTOR parameters not listed in Table 19-1 (TXVECTOR and RXVECTOR parameters) are not present. The PHY shall use a value of CH_OFFSET in the Clause 19 (High Throughput (HT) PHY specification) TXVECTOR that is consistent with Table 38-3 (Interpretation of FORMAT, NON_HT_MODULATION, and CH_BANDWIDTH parameters). A 20 MHz-only non-AP UHR STA supports HT transmission only on 20 MHz channel width.

On receipt of a PHY-CONFIG.request(PHYCONFIG_VECTOR) primitive, the UHR PHY behaves, for the purposes of HT PPDU transmission and reception, as if it were a Clause 19 (High Throughput (HT) PHY specification) PHY that had received PHY-CONFIG.request (PHYCONFIG_VECTOR) primitive but without the PHYCONFIG_VECTOR parameters CHANNEL_WIDTH, CENTER_FREQUENCY_SEGMENT_0, and, NPCA_PRIMARY_CHANNEL, and DISABLED_SUBCHANNEL_BITMAP, and with the PHYCONFIG_VECTOR parameter SECONDARY_CHANNEL_OFFSET set to SECONDARY_CHANNEL_NONE if dot11CurrentChannelWidth indicates 20 MHz, to SECONDARY_CHANNEL_ABOVE if $f_{P20,\,idx} < f_{S20,\,idx}$, or to SECONDARY_CHANNEL_BELOW otherwise.

As defined in 38.3.29 (UHR receive procedure), once a PPDU is received and detected as an HT PPDU, the behavior of the UHR PHY is defined in Clause 19 (High Throughput (HT) PHY specification). The RXVECTOR parameters in Table 19-1 (TXVECTOR and RXVECTOR parameters) are directly used, and the RXVECTOR parameters not listed in Table 19-1 (TXVECTOR and RXVECTOR parameters) are not present. A 20 MHz-only non-AP UHR STA supports HT reception only on 20 MHz channel width.

38.2.6.4 Support for VHT format

The behavior of a UHR PHY on receipt of a PHY-TXSTART.request(TXVECTOR) primitive with the TXVECTOR parameter FORMAT equal to VHT is defined in Clause 21 (Very High Throughput (VHT) PHY specification) except that the requirements in 38.3.26.3 (Transmit center frequency and symbol clock frequency tolerance) apply instead of the requirements in 21.3.17.3 (Transmit center frequency and symbol clock frequency tolerance).

The UHR TXVECTOR parameters in Table 38-1 (TXVECTOR and RXVECTOR parameters) are mapped directly to Clause 21 (Very High Throughput (VHT) PHY specification) TXVECTOR parameters in Table 21-1 (TXVECTOR and RXVECTOR parameters). The TXVECTOR parameters not listed in Table 21-1 (TXVECTOR and RXVECTOR parameters) are not present. The 20 MHz-only non-AP UHR STA supports VHT transmission only on 20 MHz channel width.

On receipt of a PHY-CONFIG.request(PHYCONFIG_VECTOR) primitive, the UHR PHY behaves, for the purposes of VHT PPDU transmission and reception, as if it were a Clause 21 (Very High Throughput (VHT) PHY specification) PHY that received the PHY-CONFIG.request(PHYCONFIG_VECTOR) primitive except that:

— the PHYCONFIG_VECTOR parameter DISABLED_SUBCHANNEL_BITMAP and NPCA_PRIMARY_CHANNEL are ignored.
— the CHANNEL_WIDTH parameter, if it is equal to 320 MHz, is replaced by 160 MHz.
— the CENTER_FREQUENCY_SEGMENT_0 parameter, if the CHANNEL_WIDTH parameter is equal to 320 MHz, is replaced by the center of the primary 160 MHz channel.

Copyright © 2025 IEEE. All rights reserved.
This is an unapproved IEEE Standards Draft, subject to change.

As defined in 38.3.29 (UHR receive procedure), once a PPDU is received and detected as an VHT PPDU, the behavior of the UHR PHY is defined in Clause 21 (Very High Throughput (VHT) PHY specification). The RXVECTOR parameters in Table 21-1 (TXVECTOR and RXVECTOR parameters) are directly used, and the UHR PHY parameters not listed in Table 21-1 (TXVECTOR and RXVECTOR parameters) are not present. A 20 MHz-only non-AP UHR STA supports VHT reception only on 20 MHz channel width.

38.2.6.5 Support for HE format

The behavior of a UHR PHY on receipt of a PHY-TXSTART.request(TXVECTOR) primitive with the TXVECTOR parameter FORMAT equal to HE_SU, HE_ER_SU, HE_MU, or HE_TB is defined in Clause 27 (High Efficiency (HE) PHY specification) except that the requirements in 38.3.26.3 (Transmit center frequency and symbol clock frequency tolerance) apply instead of the requirements in 27.3.21.3 (Transmit center frequency and symbol clock frequency tolerance).

The UHR TXVECTOR parameters in Table 38-1 (TXVECTOR and RXVECTOR parameters) are mapped directly to Clause 21 (Very High Throughput (VHT) PHY specification) TXVECTOR parameters in Table 21-1 (TXVECTOR and RXVECTOR parameters). The TXVECTOR parameters not listed in Table 27-1 (TXVECTOR and RXVECTOR parameters) are not present.

On receipt of a PHY-CONFIG.request(PHYCONFIG_VECTOR) primitive, the UHR PHY behaves, for the purposes of HE PPDU transmission and reception, as if it were a Clause 27 (High Efficiency (HE) PHY specification) PHY that received the PHY-CONFIG.request(PHYCONFIG_VECTOR) primitive except that:

— the PHYCONFIG_VECTOR parameter DISABLED_SUBCHANNEL_BITMAP and NPCA_PRIMARY_CHANNEL are ignored.
— the CHANNEL_WIDTH parameter, if it is equal to 320 MHz, is replaced by 160 MHz.
— the CENTER_FREQUENCY_SEGMENT_0 parameter, if the CHANNEL_WIDTH parameter is equal to 320 MHz, is replaced by the center of the primary 160 MHz channel.

As defined in 38.3.29 (UHR receive procedure), once a PPDU is received and detected as an HE PPDU, the behavior of the UHR PHY is defined in Clause 27 (High Efficiency (HE) PHY specification). The RXVECTOR parameters in Table 27-1 (TXVECTOR and RXVECTOR parameters) are directly used, and the RXVECTOR parameters not listed in Table 27-1 (TXVECTOR and RXVECTOR parameters) are not present.

38.2.6.6 Support for EHT format

The behavior of a UHR PHY on receipt of a PHY-TXSTART.request(TXVECTOR) primitive with the TXVECTOR parameter FORMAT equal to EHT_MU or EHT_TB is defined in Clause 36 (Extremely high throughput (EHT) PHY specification) except that the requirements in 38.3.26.3 (Transmit center frequency and symbol clock frequency tolerance) apply instead of the requirements in 36.3.20.3 (Transmit center frequency and symbol clock frequency tolerance).

The UHR TXVECTOR parameters in Table 38-1 (TXVECTOR and RXVECTOR parameters) are mapped directly to Clause 21 (Very High Throughput (VHT) PHY specification) TXVECTOR parameters in Table 21-1 (TXVECTOR and RXVECTOR parameters). The TXVECTOR parameters not listed in Table 36-1 (TXVECTOR and RXVECTOR parameters) are not present.

On receipt of a PHY-CONFIG.request(PHYCONFIG_VECTOR) primitive, the UHR PHY behaves, for the purposes of EHT PPDU transmission and reception, as if it were a Clause 36 (Extremely high throughput (EHT) PHY specification) PHY that received the PHY-CONFIG.request(PHYCONFIG_VECTOR) primitive with the PHYCONFIG_VECTOR parameter NPCA_PRIMARY_CHANNEL ignored.

Copyright © 2025 IEEE. All rights reserved.
This is an unapproved IEEE Standards Draft, subject to change.

As defined in 38.3.29 (UHR receive procedure), once a PPDU is received and detected as an EHT PPDU, the behavior of the UHR PHY is defined in Clause 36 (Extremely high throughput (EHT) PHY specification). The RXVECTOR parameters in Table 36-1 (TXVECTOR and RXVECTOR parameters) are directly used, and the RXVECTOR parameters not listed in Table 36-1 (TXVECTOR and RXVECTOR parameters) are not present.

38.3 UHR PHY

38.3.1 Introduction

This subclause provides the procedure by which PSDUs are converted to and from PPDU transmissions on the wireless medium.

During transmission, a PSDU (in the SU case) or one or more PSDUs (in the MU case) are processed (i.e., scrambled and coded) and appended to the PHY preamble to create the PPDU. At the receiver, the PHY preamble is processed to aid in the detection, demodulation, and delivery of the PSDU(s).

38.3.2 Subcarrier and resource allocation

38.3.2.1 Tone plan for RUs and MRUs

Tone plan and RU locations for RRUs and MRUs in a UHR PPDU are the same as those in an EHT PPDU. See 36.3.2 (Subcarrier and resource allocation).

38.3.2.2 Tone plan for DRUs

The UHR PHY subcarrier frequency spacing(#6260, 10308) is identical to EHT PHY subcarrier frequency spacing defined in Clause 36 (Extremely high throughput (EHT) PHY specification). In DRU tone plan, the frequency spacing between adjacent populated subcarriers is a multiple of UHR PHY subcarrier frequency spacing.(#10308)

The DRUs defined for UHR TB PPDU transmission are 26-tone DRU, 52-tone DRU, 106-tone DRU, 242-tone DRU, and 484-tone DRU.

DBWs defined for DRUs in UHR TB PPDU transmission are 20 MHz, 40 MHz, 60 MHz and 80 MHz.

The 26-tone DRU, 52-tone DRU, and 106-tone DRU are defined in 20 MHz DBW. The 26-tone DRU, 52-tone DRU, 106-tone DRU, and 242-tone DRU are defined in 40 MHz DBW. The 52-tone DRU, 106-tone DRU, and 242-tone DRU are defined in 60 MHz DBW. The 52-tone DRU, 106-tone DRU, 242-tone DRU, and 484-tone DRU are defined in 80 MHz DBW.

The maximum number of DRUs for 20 MHz, 40 MHz, 60 MHz and 80 MHz DBWs is defined in Table 38-5 (Maximum number of DRUs for each DBW in an 80 MHz subblock).

Table 38-5—Maximum number of DRUs for each DBW in an 80 MHz subblock

DRU Type	DBW 20	DBW 40	DBW 60	DBW 80
26-tone DRU	9	18	N/A	N/A
52-tone DRU	4	8	12	16

Copyright © 2025 IEEE. All rights reserved.
This is an unapproved IEEE Standards Draft, subject to change.

Table 38-5—Maximum number of DRUs for each DBW in an 80 MHz subblock *(continued)*

106-tone DRU	2	4	6	8
242-tone DRU	N/A	2	3	4
484-tone DRU	N/A	N/A	N/A	2

For a UHR TB PPDU using OFDMA transmission, an AP STA is allowed to schedule a mixture of DRU sizes, which are defined for each DBW.

A 26-tone DRU consists of 24 data subcarriers and 2 pilot subcarriers. The positions of the pilots for the 26-tone DRU are defined in Table 38-43 (Pilot indices for a 26-tone DRU transmission). The locations of the 26-tone DRUs are fixed as defined in Table 38-6 (Data and pilot subcarrier indices for distributed RUs (DRU) in a 20 MHz UHR TB PPDU) and Table 38-7 (Data and pilot subcarrier indices for distributed RUs (DRU) in a 40 MHz UHR TB PPDU).

A 52-tone DRU consists of 48 data subcarriers and 4 pilot subcarriers. The positions of the pilots for the 52-tone DRU are defined in Table 38-44 (Pilot indices for a 52-tone DRU transmission). The locations of the 52-tone DRUs are fixed as defined in Table 38-6 (Data and pilot subcarrier indices for distributed RUs (DRU) in a 20 MHz UHR TB PPDU), Table 38-7 (Data and pilot subcarrier indices for distributed RUs (DRU) in a 40 MHz UHR TB PPDU), Table 38-8 (Data and pilot subcarrier indices for distributed RUs (DRU) in a 60 MHz UHR TB PPDU), and Table 38-9 (Data and pilot subcarrier indices for distributed RUs (DRU) in an 80 MHz UHR TB PPDU with 80 MHz DBW).

A 106-tone DRU consists of 102 data subcarriers and 4 pilot subcarriers. The positions of the pilots for the 106-tone DRU are defined in Table 38-45 (Pilot indices for a 106-tone DRU transmission). The locations of the 106-tone DRUs are fixed as defined in Table 38-6 (Data and pilot subcarrier indices for distributed RUs (DRU) in a 20 MHz UHR TB PPDU), Table 38-7 (Data and pilot subcarrier indices for distributed RUs (DRU) in a 40 MHz UHR TB PPDU), Table 38-8 (Data and pilot subcarrier indices for distributed RUs (DRU) in a 60 MHz UHR TB PPDU), and Table 38-9 (Data and pilot subcarrier indices for distributed RUs (DRU) in an 80 MHz UHR TB PPDU with 80 MHz DBW).

A 242-tone DRU consists of 234 data subcarriers and 8 pilot subcarriers. The positions of the pilots for the 242-tone DRU are defined in Table 38-46 (Pilot indices for a 242-tone DRU transmission). The locations of the 242-tone DRUs are fixed as defined in Table 38-7 (Data and pilot subcarrier indices for distributed RUs (DRU) in a 40 MHz UHR TB PPDU), Table 38-8 (Data and pilot subcarrier indices for distributed RUs (DRU) in a 60 MHz UHR TB PPDU), and Table 38-9 (Data and pilot subcarrier indices for distributed RUs (DRU) in an 80 MHz UHR TB PPDU with 80 MHz DBW).

A 484-tone DRU consists of 468 data subcarriers and 16 pilot subcarriers. The positions of the pilots for the 484-tone DRU are defined in Table 38-47 (Pilot indices for a 484-tone DRU transmission). The locations of

Copyright © 2025 IEEE. All rights reserved.
This is an unapproved IEEE Standards Draft, subject to change.

the 484-tone DRUs are fixed as defined in Table 38-9 (Data and pilot subcarrier indices for distributed RUs (DRU) in an 80 MHz UHR TB PPDU with 80 MHz DBW).

Table 38-6—Data and pilot subcarrier indices for distributed RUs (DRU) in a 20 MHz UHR TB PPDU

DRU Type	DRU index and subcarrier range				
26-tone DRU	DRU_1 [–120:9:–12, 6:9:114]	DRU_2 [–116:9:–8, 10:9:118]	DRU_3 [–118:9:–10, 8:9:116]	DRU_4 [–114:9:–6, 12:9:120]	DRU_5 [–112:9:–4, 5:9:113]
	DRU_6 [–119:9:–11, 7:9:115]	DRU_7 [–115:9:–7, 11:9:119]	DRU_8 [–117:9:–9, 9:9:117]	DRU_9 [–113:9:–5, 4:9:112]	
52-tone DRU	DRU_1 26-tone [DRU_1, DRU_2]		DRU_2 26-tone [DRU_3, DRU_4]		
	DRU_3 26-tone [DRU_6, DRU_7]		DRU_4 26-tone [DRU_8, DRU_9]		
106-tone DRU	DRU_1 26-tone [$DRU_{1\sim4}$], [–3, 3]		DRU2 26-tone [$DRU_{6\sim9}$], [–2, 2]		

Table 38-7—Data and pilot subcarrier indices for distributed RUs (DRU) in a 40 MHz UHR TB PPDU

DRU Type	DRU index and subcarrier range					
26-tone DRU	DRU_1 [–242:18: –26, 10:18:226]	DRU_2 [–233:18: –17, 19:18:235]	DRU_3 [–238:18: –22, 14:18:230]	DRU_4 [–229:18: –13, 23:18:239]	DRU_5 [–225:18: –9, 27:18:243]	DRU_6 [–240:18: –24, 12:18:228]
	DRU_7 [–231:18: –15, 21:18:237]	DRU_8 [–236:18: –20, 16:18:232]	DRU_9 [–227:18: –11, 25:18:241]	DRU_{10} [–241:18: –25, 11:18:227]	DRU_{11} [–232:18: –16, 20:18:236]	DRU_{12} [–237:18: –21, 15:18:231]
	DRU_{13} [–228:18: –12, 24:18:240]	DRU_{14} [–234:18: –18, 18:18:234]	DRU_{15} [–239:18: –23, 13:18:229]	DRU_{16} [–230:18: –14, 22:18:238]	DRU_{17} [–235:18: –19, 17:18:233]	DRU_{18} [–226:18: –10, 26:18:242]
52-tone DRU	DRU_1 [–242:9:–17, 10:9:235]		DRU_2 [–238:9:–13, 14:9:239]		DRU_3 [–240:9:–15, 12:9:237]	
	DRU_4 [–236:9:–11, 16:9:241]		DRU_5 [–241:9:–16, 11:9:236]		DRU_6 [–237:9:–12, 15:9:240]	
	DRU_7 [–239:9:–14, 13:9:238]		DRU_8 [–235:9:–10, 17:9:242]			

Copyright © 2025 IEEE. All rights reserved.
This is an unapproved IEEE Standards Draft, subject to change.

Table 38-7—Data and pilot subcarrier indices for distributed RUs (DRU) in a 40 MHz UHR TB PPDU *(continued)*

106-tone DRU	DRU_1 26-tone [$DRU_{1\sim4}$], [–8,5]	DRU2 26-tone [$DRU_{6\sim9}$], [–6,7]	DRU3 26-tone [$DRU_{10\sim13}$], [–7,6]
	DRU4 26-tone [$DRU_{15\sim18}$], [–5,8]		
242-tone DRU	DRU1 106-tone [$DRU_{1\sim2}$], 26-tone DRU_5, [–244,–4,3,9]	DRU2 106-tone [$DRU_{3\sim4}$], 26-tone DRU_{14}, [–243,–3,4,244]	

Table 38-8—Data and pilot subcarrier indices for distributed RUs (DRU) in a 60 MHz UHR TB PPDU

DRU Type	DRU index and subcarrier range			
52-tone DRU	DRU_1 [–499:14:–23, 5:14:229]	DRU_2 [–492:14:–16, 12:14:236]	DRU_3 [–496:14:–20, 8:14:232]	DRU_4 [–489:14:–13, 15:14:239]
	DRU_5 [–498:14:–22, 6:14:230]	DRU_6 [–491:14:–15, 13:14:237]	DRU_7 [–495:14:–19, 9:14:233]	DRU_8 [–488:14:–12, 16:14:240]
	DRU_9 [–497:14:–21, 7:14:231]	DRU_{10} [–490:14:–14, 14:14:238]	DRU_{11} [–494:14:–18, 10:14:234]	DRU_{12} [–487:14:–11, 17:14:241]
106-tone DRU	DRU_1 [–499:7:–9, 5:7:243]	DRU_2 [–496:7:–6, 8:7:246]	DRU_3 [–498:7:–8, 6:7:244]	DRU_4 [–495:7:–5, 9:7:247]
	DRU_5 [–497:7:–7, 7:7:245]	DRU_6 [–494:7:–4, 10:7:248]	N/A	N/A
242-tone DRU	DRU_1 [–499:7:–9, 5:7:243, –496:7:–6, 8:7:246, –458:21:–38, 25:21:193]		DRU_2 [–498:7:–8, 6:7:244, –495:7:–5, 9:7:247, –451:21:–31, 32:21:200]	
	DRU_3 [–497:7:–7, 7:7:245, –494:7:–4,10:7:248, –444:21:–24, 39:21:207]		N/A	

Copyright © 2025 IEEE. All rights reserved.
This is an unapproved IEEE Standards Draft, subject to change.

Table 38-9—Data and pilot subcarrier indices for distributed RUs (DRU) in an 80 MHz UHR TB PPDU with 80 MHz DBW

DRU Type	DRU index and subcarrier range			
52-tone DRU	DRU_1 [–483:36:–51, 17:36:449], [–467:36:–35, 33:36:465]	DRU_2 [–475:36:–43, 25:36:457], [–459:36:–27, 41:36:473]	DRU_3 [–479:36:–47, 21:36:453], [–463:36:–31, 37:36:469]	DRU_4 [–471:36:–39, 29:36:461], [–455:36:–23, 45:36:477]
	DRU_5 [–477:36:–45, 23:36:455], [–461:36:–29, 39:36:471]	DRU_6 [–469:36:–37, 31:36:463], [–453:36:–21, 47:36:479]	DRU_7 [–481:36:–49, 19:36:451], [–465:36:–33, 35:36:467]	DRU_8 [–473:36:–41, 27:36:459], [–457:36:–25, 43:36:475]
	DRU_9 [–482:36:–50, 18:36:450], [–466:36:–34, 34:36:466]	DRU_{10} [–474:36:–42, 26:36:458], [–458:36:–26, 42:36:474]	DRU_{11} [–478:36–46, 22:36:454], [–462:36:–30, 38:36:470]	DRU_{12} [–470:36:–38, 30:36:462], [–454:36:–22, 46:36:478]
	DRU_{13} [–476:36:–44, 24:36:456], [–460:36:–28, 40:36:472]	DRU_{14} [–468:36:–36, 32:36:464], [–452:36:–20, 48:36:480]	DRU_{15} [–480:36:–48, 20:36:452], [–464:36:–32, 36:36:468]	DRU_{16} [–472:36:–40, 28:36:460], [–456:36:–24, 44:36:476]
106-tone DRU	DRU_1 52-tone [$DRU_{1\sim2}$], [–495, 485]	DRU_2 52-tone [$DRU_{3\sim4}$], [–491, 489]	DRU_3 52-tone [$DRU_{5\sim6}$], [–489, 491]	DRU_4 52-tone [$DRU_{7\sim8}$], [–493, 487]
	DRU_5 52-tone [$DRU_{9\sim10}$], [–494, 486]	DRU_6 52-tone [$DRU_{11\sim12}$], [–490,490]	DRU_7 52-tone [$DRU_{13\sim14}$], [–488,492]	DRU_8 52-tone [$DRU_{15\sim16}$], [–492,488]
242-tone DRU	DRU_1 [–499:4:–19, 17:4:497]		DRU_2 [–497:4:–17, 19:4:499]	
	DRU_3 [–498:4:–18, 18:4:498]		DRU_4 [–496:4:–16, 20:4:500]	
484-tone DRU	DRU_1 [–499:2:–17, 17:2:499]		DRU_2 [–498:2:–16, 18:2:500]	

For a DRU distributed over a frequency subblock of a PPDU with bandwidth wider than 80 MHz, the subcarrier indices of a DRU with PHY DRU index j are defined by the Equation (38-1):

$$k_{DRU_j} = k_{DRU_i} + K_{\text{shift}}(l) \tag{38-1}$$

where

k_{DRU_i} is a DRU subcarrier index of DRU index i from DRU tone plan in Table 38-6 (Data and pilot subcarrier indices for distributed RUs (DRU) in a 20 MHz UHR TB PPDU), Table 38-7 (Data and pilot subcarrier indices for distributed RUs (DRU) in a 40 MHz UHR TB PPDU), and Table 38-8 (Data and pilot subcarrier indices for distributed RUs (DRU) in a 60 MHz UHR TB PPDU), Table 38-9 (Data and pilot subcarrier indices for distributed RUs (DRU) in an 80 MHz

Copyright © 2025 IEEE. All rights reserved.
This is an unapproved IEEE Standards Draft, subject to change.

UHR TB PPDU with 80 MHz DBW) for an DRU on DBW 20 MHz, 40 MHz, 60MHz, and 80 MHz, respectively;

k_{DRU_j} is a subcarrier index of PHY DRU index j on the *l-th* frequency subblock;

$K_{\text{shift}}(l)$ is the constant shift value for the *l-th* frequency subblock of a 20 MHz frequency subblock size within CBW80, CBW160 or CBW320, a 40 MHz frequency subblock size within CBW80, CBW160 or CBW320, or an 80 MHz frequency subblock size within CBW160 or CBW320, as defined in Table 38-10 (Constant shift value Kshift for DRU on a frequency subblock of wide bandwidth);

i the DRU index for DRU on DBW 20 MHz, 40 MHz, 60 MHz or 80 MHz; The relationship between DRU index i and PHY DRU index j can be found in Table 9-65a (Encoding of the PS160 and RU Allocation subfields in a UHR variant User Info field for DBW 20 MHz), Table 9-65b (Encoding of the PS160 and RU Allocation subfields in a UHR variant User Info field for DBW 40 MHz), Table 9-65c (Encoding of the PS160 and RU Allocation subfields in a UHR variant User Info field for DBW 60 MHz), and Table 9-65d (Encoding of the PS160 and RU Allocation subfields in a UHR variant User Info field for DBW 80 MHz);

j the PHY DRU index defined in Table 9-65a (Encoding of the PS160 and RU Allocation subfields in a UHR variant User Info field for DBW 20 MHz) for DBW 20 MHz, Table 9-65b (Encoding of the PS160 and RU Allocation subfields in a UHR variant User Info field for DBW 40 MHz) for DBW 40 MHz, Table 9-65c (Encoding of the PS160 and RU Allocation subfields in a UHR variant User Info field for DBW 60 MHz), and Table 9-65d (Encoding of the PS160 and RU Allocation subfields in a UHR variant User Info field for DBW 80 MHz) for DBW 80 MHz;

l the frequency subblock index of subblock size 20 MHz, 40 MHz, and 80 MHz on UHR TB PPDU bandwidth 80 MHz, 160 MHz, and 320 MHz, which is defined in Table 9-65a (Encoding of the PS160 and RU Allocation subfields in a UHR variant User Info field for DBW 20 MHz) for DBW 20 MHz, Table 9-65b (Encoding of the PS160 and RU Allocation subfields in a UHR variant User Info field for DBW 40 MHz) for DBW 40 MHz, Table 9-65c (Encoding of the PS160 and RU Allocation subfields in a UHR variant User Info field for DBW 60 MHz), and Table 9-65d (Encoding of the PS160 and RU Allocation subfields in a UHR variant User Info field for DBW 80 MHz) for DBW 80 MHz.

Table 38-10—Constant shift value K_{shift} for DRU on a frequency subblock of wide bandwidth

Frequency Subblock Size	CBW80	CBW160	CBW320
20 MHz	[–380,–133,132,379] for *l*=0:3	[–892,–645,–380,–133,132,379,644,891] for *l*=0:7	[–1916, –1669, –1404, –1157, –892, –645, –380, –133, 132, 379, 644, 891, 1156, 1403, 1668, 1915] for *l*=0:15
40 MHz	[–256, 256] for *l*=0:1	[–768,–256,256,768] for *l*=0:3	[–1792,–1280,–768,–256,256,768,1280,1792] for *l*=0:7
80 MHz (for DBW 80 MHz and DBW 60 MHz)	N/A	[–512,512] for *l*=0:1	[–1536,–512,512,1536] for *l*=0:3

Copyright © 2025 IEEE. All rights reserved.
This is an unapproved IEEE Standards Draft, subject to change.

The 20 MHz UHR TB PPDU with one or more DRUs on DBW 20 MHz has 3 DC subcarriers located at [–1: 1]. The 40 MHz UHR TB PPDU with one or more DRUs on DBW 40 MHz has 5 DC subcarriers located at [–2: 2]. The 80 MHz TB PPDU with one or more DRUs on DBW60 has 7 DC subcarriers located at [–3: 3]. The 80 MHz UHR TB PPDU with one or more DRUs on DBW 80 MHz has 23 DC subcarriers located at [–11: 11]. The 80 MHz TB PPDU with DRUs on DBW20 and/or DBW 40 has 23 DC subcarriers located at [–11: 11]. The 160 MHz and 320 MHz UHR TB PPDU with the hybrid DRU/RRU mode (see 38.3.4 (Transmission of DRU)) have 23 DC subcarriers located at [–11: 11].

The 20 MHz UHR TB PPDU with DRUs on DBW 20 MHz has 11 guard subcarriers: the 6 lowest frequency subcarriers [–128: –123] and the 5 highest frequency subcarriers [123: 127]. The 40 MHz UHR TB PPDU with DRUs on DBW 40 MHz has 23 guard subcarriers: the 12 lowest frequency subcarriers [–256: –245] and the 11 highest frequency subcarriers [245: 255]. The 80 MHz UHR TB PPDU with DRUs on DBW 60 MHz has 23 guard subcarriers: the 12 lowest frequency subcarriers [-512: -501] and the 11 highest frequency subcarriers [501: 511]. The 80 MHz UHR TB PPDU with DRUs on DBW 80 MHz has 23 guard subcarriers: the 12 lowest frequency subcarriers [–512: –501] and the 11 highest frequency subcarriers [501: 511]. The 80 MHz TB PPDU with DRUs on DBW20 and/or DBW 40 has 23 guard subcarriers: the 12 lowest frequency subcarriers [–512: –501] and the 11 highest frequency subcarriers [501: 511]. For the 160 MHz and 320 MHz UHR TB PPDU with the hybrid DRU/RRU mode (see 38.3.4 (Transmission of DRU)), the same number of lowest frequency and highest frequency guard subcarriers as 80 MHz are defined at each edge of the 160 MHz and 320 MHz.

The parameters for DC tones and guard tones are summarized in the Table 38-11 (DC and Guard Subcarrier allocation related constants for UHR TB PPDU with DRUs).

Table 38-11—DC and Guard Subcarrier allocation related constants for UHR TB PPDU with DRUs

Parameter	DRU for 20 MHz UHR TB PPDU using 20 MHz DBW	DRU for 40 MHz UHR TB PPDU using 40 MHz DBW	DRU for 80 MHz UHR TB PPDU using 60 MHz DBW	DRU for 80 MHz UHR TB PPDU using 80 MHz DBW	Description
N_{DC}	3	5	7	23	Number of null subcarriers at DC
$N_{Guard,Left}$	6	12	12	12	Number of low frequency guard subcarriers
$N_{Guard,Right}$	5	11	11	11	Number of high frequency guard subcarriers

38.3.2.3 Null subcarriers

38.3.2.3.1 General

The null subcarriers are located near the DC or edge tones to provide protection from transmit center frequency leakage, receiver DC offset, and interference from neighbouring RRU(s), MRU(s), or DRU(s). The null subcarriers have zero energy.

Copyright © 2025 IEEE. All rights reserved.
This is an unapproved IEEE Standards Draft, subject to change.

38.3.2.3.2 Null subcarriers for RRUs and MRUs

For RRUs in a UHR MU PPDU or UHR TB PPDU, the indices of the null subcarriers for 20 MHz and 40 MHz are enumerated in Table 27-11 (Null subcarrier indices). The indices of the null subcarriers for 80 MHz, 160 MHz, and 320 MHz are enumerated in Table 36-16 (Null subcarrier indices for 80 MHz, 160 MHz, and 320 MHz).

The indices of the null subcarriers for MRUs are determined by the size and the location of each component RU in each bandwidth.

The indices of the null subcarriers for a UHR ELR PPDU are [–122, –69, –16:–4, 4:16, 69, 122].

38.3.2.3.3 Null subcarriers for DRUs

For DRUs in a 20 MHz UHR TB PPDU and a 40 MHz UHR TB PPDU, the indices of the null subcarriers are enumerated in Table 38-12 (Null subcarrier indices for DRUs of 20 MHz and 40 MHz UHR TB PPDU).

Table 38-12—Null subcarrier indices for DRUs of 20 MHz and 40 MHz UHR TB PPDU

Channel bandwidth	DRU Size	Null subcarrier indices
20 MHz	26, 52	[–122, –121, –3, –2, 2, 3, 121, 122]
	106	[–122, –121, 121, 122]
40 MHz	26, 52	[–244, –243, –8:–3, 3:9, 244]
	106	[–244, –243, –4, –3, 3, 4, 9, 244]
	242	None
NOTE—*n*:*m* indicates the index from *n* to *m*.		

Copyright © 2025 IEEE. All rights reserved.
This is an unapproved IEEE Standards Draft, subject to change.

For DRUs in an 80 MHz UHR TB PPDU, the indices of the null subcarriers are enumerated in Table 38-13 (Null subcarrier indices for DRUs of 80 MHz UHR TB PPDU).

Table 38-13—Null subcarrier indices for DRUs of 80 MHz UHR TB PPDU

DBW	Channel/ Subchannel	DRU Size	Null subcarrier indices
20 MHz	1	26, 52	[–383 –382 –381 –380 –379 –378 –377 –259 –258 –257]
		106	[–381 –380 –379 –259 –258 –257]
	2	26, 52	[–256 –255 –254 –136 –135 –134 –133 –132 –131 –130 –12]
		106	[–256 –255 –254 –134 –133 –132 –12]
	3	26, 52	[129 130 131 132 133 134 135 253 254 255]
		106	[131 132 133 253 254 255]
	4	26, 52	[256 257 258 376 377 378 379 380 381 382 500]
		106	[256 257 258 378 379 380 500]
40 MHz	1	26, 52	[–500 –499 –264:–247 –12]
		106	[–500 –499 –260:–252 –247 –12]
		242	[–258:–254]
	2	26, 52	[12 13 248:265 500]
		106	[12 13 252:260 265 500]
		242	[254:258]
60 MHz	N/A	52	[–500:7:–10, –9:–4, 4:7:242, 243:255]
		106	[–500:7:–10, 4:7:249, 250:255]
		242	[–500:7:–465, –17, –10, 4, 11, 18, 214:7:249, 250:255]
80 MHz	N/A	52(#4016)	[–500:–484, –451:–448, –415:–412, –379:–376, –343:–340, –307:–304, –271:–268, –235:–232, –199:–196, –163:–160, –127:–124, –91:–88, –55:–52, –19:–12, 12:16, 49:52, 85:88, 121:124, 157:160, 193:196, 229:232, 265:268, 301:304, 337:340, 373:376, 409:412, 445:448, 481:500]
		106	[–500:–496, –487:–484, –451:–448, –415:–412, –379:–376, –343:–340, –307:–304, –271:–268, –235:–232, –199:–196, –163:–160, –127:–124, –91:–88, –55:–52, –19:–12, 12:16, 49:52, 85:88, 121:124, 157:160, 193:196, 229:232, 265:268, 301:304, 337:340, 373:376, 409:412, 445:448, 481:484, 493:500]
		242	[–500, –15:–12, 12:16]
		484	[–500, –15:–12, 12:16]

NOTE—*n*:*m* indicates the index from *n* to *m*.

Copyright © 2025 IEEE. All rights reserved.
This is an unapproved IEEE Standards Draft, subject to change.

For DRUs corresponding to DBW 20 MHz and 40 MHz in the first 80 MHz frequency subblock of a 160 MHz UHR TB PPDU, the null subcarrier indices for a DRU size corresponding to a DBW on frequency subblock i are the null subcarrier indices for the same DRU size corresponding to the same DBW on frequency subblock *i* in an(#9636) 80 MHz UHR TB PPDU minus 512, in which, $i \in$ [1, 2, 3, 4] for a 20 MHz frequency subblock and $i \in$ [1, 2] for a 40 MHz frequency subblock. For DRUs corresponding to DBW 80 MHz in the first 80 MHz frequency subblock of a 160 MHz UHR TB PPDU, the null subcarrier indices for a DRU size are [–523:–501] and the null subcarrier indices for the same DRU size corresponding to DBW 80 MHz in an 80 MHz UHR TB PPDU minus 512.

For DRUs corresponding to DBW 20 MHz and 40 MHz in the second 80 MHz frequency subblock of a 160 MHz UHR TB PPDU, the null subcarrier indices for a DRU size corresponding to a DBW on frequency subblock *i* are the null subcarrier indices for the same DRU size corresponding to the same DBW on frequency subblock i-N/2 in an 80 MHz UHR TB PPDU plus 512, in which, $i \in$ [5, 6, 7, 8] for a 20 MHz frequency subblock, $i \in$ [3, 4] for a 40 MHz frequency subblock, and $N = \max(i)$. For DRUs corresponding to DBW 80 MHz in the second 80 MHz frequency subblock of a 160 MHz UHR TB PPDU, the null subcarrier indices for a DRU size are [501:523] and the null subcarrier indices for the same DRU size corresponding to DBW 80 MHz in an 80 MHz UHR TB PPDU plus 512.

For DRUs corresponding to DBW 20 MHz and 40 MHz in the first 80 MHz frequency subblock of a 320 MHz UHR TB PPDU, the null subcarrier indices for a DRU size corresponding to a DBW on frequency subblock *i* are and the null subcarrier indices for the same DRU size corresponding to the same DBW on frequency subblock *i* in an 80 MHz UHR TB PPDU minus 1536, in which, $i \in$ [1, 2, 3, 4] for a 20 MHz frequency subblock and $i \in$ [1, 2] for a 40 MHz frequency subblock. For DRUs corresponding to DBW 80 MHz in the first 80 MHz frequency subblock of a 320 MHz UHR TB PPDU, the null subcarrier indices for a DRU size are [–1547:–1525] and the null subcarrier indices for the same DRU size corresponding to DBW 80 MHz in an 80 MHz UHR TB PPDU minus 1536.

For DRUs corresponding to DBW 20 MHz and 40 MHz in the second 80 MHz frequency subblock of a 320 MHz UHR TB PPDU, the null subcarrier indices for a DRU size corresponding to a DBW on frequency subblock *i* are the null subcarrier indices for the same DRU size corresponding to the same DBW on frequency subblock i-N/2 in an 80 MHz UHR TB PPDU minus 512, in which, $i \in$ [5, 6, 7, 8] for a 20 MHz frequency subblock, $i \in$ [3, 4] for a 40 MHz frequency subblock, and $N = \max(i)$. For DRUs corresponding to DBW 80 MHz in the second 80 MHz frequency subblock of a 320 MHz UHR TB PPDU, the null subcarrier indices for a DRU size are [–523:–501] and the null subcarrier indices for the same DRU size corresponding to DBW 80 MHz in an 80 MHz UHR TB PPDU minus 512.

For DRUs corresponding to DBW 20 MHz and 40 MHz in the third 80 MHz frequency subblock of a 320 MHz UHR TB PPDU, the null subcarrier indices for a DRU size corresponding to a DBW on frequency subblock *i* are the null subcarrier indices for the same DRU size corresponding to the same DBW on frequency subblock i-2/3×N in an 80 MHz UHR TB PPDU plus 512, in which, $i \in$ [9, 10, 11, 12] for a 20 MHz frequency subblock, $i \in$ [5, 6] for a 40 MHz frequency subblock, and $N = \max(i)$. For DRUs corresponding to DBW 80 MHz in the third 80 MHz frequency subblock of a 320 MHz UHR TB PPDU, the null subcarrier indices for a DRU size are [501:523] and the null subcarrier indices for the same DRU size corresponding to DBW 80 MHz in an 80 MHz UHR TB PPDU plus 512.

For DRUs corresponding to DBW 20 MHz and 40 MHz in the fourth 80 MHz frequency subblock of a 320 MHz UHR TB PPDU, the null subcarrier indices for a DRU size corresponding to a DBW on frequency subblock *i* are the null subcarrier indices for the same DRU size corresponding to the same DBW on frequency subblock i-3/4×N in an 80 MHz UHR TB PPDU plus 1536, in which, $i \in$ [13, 14, 15, 16] for a 20 MHz frequency subblock and i $\in$ [7, 8] for a 40 MHz frequency subblock, and $N = \max(i)$. For DRUs corresponding to DBW 80 MHz in the fourth 80 MHz frequency subblock of a 320 MHz UHR TB PPDU,

Copyright © 2025 IEEE. All rights reserved.
This is an unapproved IEEE Standards Draft, subject to change.

the null subcarrier indices for a DRU size are [1525:1547] and the null subcarrier indices for the same DRU size corresponding to DBW 80 MHz in an 80 MHz UHR TB PPDU plus 1536.

For a 160 MHz UHR TB PPDU and a 320 MHz UHR TB PPDU with the hybrid DRU/RRU mode (see 38.3.4 (Transmission of DRU)), the indices of the null subcarriers are the same as the indices of the null subcarriers in the corresponding 80 MHz frequency subblock.

NOTE—The notation $a \in A$ means the value a is contained in the set A.

38.3.2.4 RU and MRU restrictions for 20 MHz operation

For a 20 MHz operating non-AP UHR STA receiving a 40 MHz, 80 MHz, 160 MHz, or 320 MHz UHR MU PPDU, or transmitting a 40 MHz, 80 MHz, 160 MHz, or 320 MHz UHR TB PPDU, it is noteworthy that the 20 MHz RU or MRU tone mapping (see 36.3.2 (Subcarrier and resource allocation)) is not aligned with the 40 MHz, 80 MHz, 160 MHz, or 320 MHz RU or MRU tone mapping (see 36.3.2 (Subcarrier and resource allocation)) when RRUs are used for a transmission.

A 20 MHz operating non-AP UHR STA does not support the RU(s) or MRU(s) enumerated in 36.3.2.6 (RU and MRU restrictions for 20 MHz operation) for 40 MHz, 80 MHz, 160 MHz, and 320 MHz UHR MU PPDU (receive) and UHR TB PPDU (transmit) when RRUs are used for a transmission.

A 20 MHz operating non-AP UHR STA may support reception of a 242-tone RU for 40 MHz, 80 MHz, 160 MHz, and 320 MHz UHR MU PPDU as described in 36.3.2.6 (RU and MRU restrictions for 20 MHz operation) when RRUs are used for a transmission.

A 20 MHz operating non-AP UHR STA does not support any DRUs for 40 MHz UHR TB PPDU (transmit).

NOTE—When a 20 MHz operating STA participates in an 80 MHz or wider UHR TB PPDU using 20 MHz DBW, the TX LO leakage of the STA might interfere with some of the data subcarriers within the 20 MHz DBW such that for some DRUs in that 20 MHz DBW performance of high MCS may be significantly degraded.

38.3.3 MU-MIMO

38.3.3.1 Supported RU and MRU sizes in partial BW DL and UL MU-MIMO

Supported RU and MRU for partial BW DL and UL MU-MIMO in UHR is limited to PPDU BW of 160MHz and 320MHz only and further limited as follows:

— A maximum of two RUs or MRUs may use DL or UL MU-MIMO.
— Each 80MHz segment may use either OFDMA or MU-MIMO.
— In 160MHz PPDU, MU-MIMO can only be transmitted over a 996-tone RU or if punctured over a 484+242-tone MRU.
— In 320 MHz PPDU, MU-MIMO can only be transmitted over a 2×996-tone RU or 3×996-tone MRU or if punctured, over 996+484-tone MRU or 2×996+484-tone RU.

38.3.4 Transmission of DRU

A DRU transmission is allowed only in a UL OFDMA transmission to maximize the power boost gain of each DRU, and disallowed in a UL MU MIMO transmission. Also, the maximum number of spatial streams allowed in a DRU transmission is two.

For a 20 MHz TB PPDU, the DBW is 20 MHz only.

For a 40 MHz TB PPDU, the DBW is 40 MHz only.

Copyright © 2025 IEEE. All rights reserved.
This is an unapproved IEEE Standards Draft, subject to change.

For an 80 MHz UHR TB PPDU without any unallocated subchannel, 80MHz DBW and two DBW modes combining two 20 MHz DBWs and one 40 MHz DBW are allowed as described in Table 38-14 (DBW modes allowed in an 80 MHz frequency subblock for an 80 MHz, 160 MHz, or 320 MHz UHR TB PPDU). The DBW mode is an allowed combination of DBWs for a DRU transmission. In one mode, 20 MHz DBWs are applied to the lowest and the second lowest 20 MHz subchannels and 40 MHz DBW is applied to the highest 40 MHz subchannel. In the other mode, 20 MHz DBWs are applied to the highest and the second highest 20 MHz subchannels and 40 MHz DBW is applied to the lowest 40 MHz subchannel. In these DBW modes, 20 MHz and 40 MHz DRU tone plans (see 38.3.2.2 (Tone plan for DRUs)) are used for 20 MHz and 40 MHz DBWs, respectively, by applying constant tone shifts (see 38.3.2.2 (Tone plan for DRUs)) to align tone indices.

For an 80 MHz UHR TB PPDU with 20 MHz unallocated, four DBW modes combining one 20 MHz DBW and one 40 MHz DBW are allowed where 40 MHz DBW is applied to the allocated 40 MHz subchannel and 20 MHz DBW is applied to the allocated 20 MHz subchannel as described in Table 38-14 (DBW modes allowed in an 80 MHz frequency subblock for an 80 MHz, 160 MHz, or 320 MHz UHR TB PPDU). In these DBW modes, 20 MHz and 40 MHz DRU tone plans (see 38.3.2.2 (Tone plan for DRUs)) are used for 20 MHz and 40 MHz DBWs, respectively, by applying constant tone shifts (see 38.3.2.2 (Tone plan for DRUs)) to align tone indices.

For an 80 MHz UHR TB PPDU with the highest 20 MHz unallocated, 60 MHz DBW is allowed as described in Table 38-14 (DBW modes allowed in an 80 MHz frequency subblock for an 80 MHz, 160 MHz, or 320 MHz UHR TB PPDU) and the 60 MHz DRU tone plan (see 38.3.2.2 (Tone plan for DRUs)) is used.

For a 160 MHz or 320 MHz UHR TB PPDU, 80 MHz DBW is allowed in an 80 MHz frequency subblock without any unallocated subchannel as described in Table 38-14 (DBW modes allowed in an 80 MHz frequency subblock for an 80 MHz, 160 MHz, or 320 MHz UHR TB PPDU). The 80 MHz DRU tone plan (see 38.3.2.2 (Tone plan for DRUs)) is used by applying constant tone shifts (see 38.3.2.2 (Tone plan for DRUs)) to align tone indices.

For a 160 MHz or 320 MHz UHR TB PPDU, two DBW modes combining two 20 MHz DBWs and one 40 MHz DBW are allowed only in the primary 80 MHz channel without any unallocated subchannel as described in Table 38-14 (DBW modes allowed in an 80 MHz frequency subblock for an 80 MHz, 160 MHz, or 320 MHz UHR TB PPDU). In these DBW modes, 20 MHz and 40 MHz DRU tone plans (see 38.3.2.2 (Tone plan for DRUs)) are used for 20 MHz and 40 MHz DBWs, respectively, by applying constant tone shifts (38.3.2.2 (Tone plan for DRUs)) to align tone indices.

For a 160 MHz or 320 MHz UHR TB PPDU, four DBW modes combining one 20 MHz DBW and one 40 MHz DBW are allowed in an 80 MHz frequency subblock with 20 MHz unallocated where 40 MHz DBW is applied to the allocated 40 MHz subchannel and 20 MHz DBW is applied to the allocated 20 MHz subchannel as described in Table 38-14 (DBW modes allowed in an 80 MHz frequency subblock for an 80 MHz, 160 MHz, or 320 MHz UHR TB PPDU). In these DBW modes, 20 MHz and 40 MHz DRU tone plans (see 38.3.2.2 (Tone plan for DRUs)) are used for 20 MHz DBWs and 40 MHz DBW, respectively, by applying constant tone shifts (see 38.3.2.2 (Tone plan for DRUs)) to align tone indices.

For a 160 MHz or 320 MHz UHR TB PPDU, 60 MHz DBW is allowed in an 80 MHz frequency subblock with the highest 20 MHz unallocated as described in Table 38-14 (DBW modes allowed in an 80 MHz frequency subblock for an 80 MHz, 160 MHz, or 320 MHz UHR TB PPDU), and the 60 MHz DRU tone plan (see 38.3.2.2 (Tone plan for DRUs)) is used by applying constant tone shifts (see 38.3.2.2 (Tone plan for DRUs)) to align tone indices.

For a 160 MHz or 320 MHz UHR TB PPDU, 40 MHz DBW is applied to the allocated 40 MHz subchannel in an 80 MHz frequency subblock with 40 MHz unallocated as described in Table 38-14 (DBW modes allowed in an 80 MHz frequency subblock for an 80 MHz, 160 MHz, or 320 MHz UHR TB PPDU), and 40

Copyright © 2025 IEEE. All rights reserved.
This is an unapproved IEEE Standards Draft, subject to change.

MHz DRU tone plan (see 38.3.2.2 (Tone plan for DRUs)) is used by applying constant tone shifts (see 38.3.2.2 (Tone plan for DRUs)) to align tone indices.

Table 38-14— DBW modes allowed in an 80 MHz frequency subblock for an 80 MHz, 160 MHz, or 320 MHz UHR TB PPDU

	DBW modes
Without any unallocated subchannel	{DBW80}, {DBW20–DBW20–DBW40} (see NOTE 1), {DBW40–DBW20–DBW20} (see NOTE 1)
With an unallocated subchannel	{[gap–20]–DBW20–DBW40}, {DBW20–[gap–20]–DBW40}, {DBW40–[gap–20]–DBW20}, {DBW40–DBW20–[gap–20]}, {DBW60–[gap–20]}, {[gap–40]–DBW40} (see NOTE 2), {DBW40–[gap–40]} (see NOTE 2)
DBW*x* and [gap–*y*] mean *x* MHz DBW and *y* MHz unallocated respectively NOTE 1—These two DBW modes are allowed only in the primary 80 MHz channel without any unallocated in case of a 160 MHz or 320 MHz UHR TB PPDU. NOTE 2—These two DBW modes are allowed only in a 160 MHz or 320 MHz UHR TB PPDU	

For a 160 MHz UHR TB PPDU and a 320 MHz UHR TB PPDU, a hybrid mode where DRUs and RRUs(#9134) are simultaneously used in one UHR TB PPDU is allowed. For a UHR TB PPDU with the hybrid mode, either DRU or RRU are used within each 80 MHz frequency subblock and DRUs and RRUs are not mixed within a certain 80 MHz frequency subblock. The minimum RRU size is 242 in the hybrid mode.

(#M528)For a hybrid RRU and DRU transmission, partial BW MU-MIMO is disallowed.

UHR-MCS 15 is disallowed in a DRU transmission.

38.3.5 Interference mitigation

Interference Mitigation (IM) is a technique that enables reliable reception of the PPDU in the presence of an interfering signal. To enable mitigation of the interference, additional pilots can be used within the data portion of the PPDU.

A UHR STA may transmit a UHR PPDU with IM enabled if all of the following conditions are met:

— The UHR PPDU is a SU transmission using the UHR MU PPDU.
— The Punctured Channel Information field in the U-SIG field is set to 0 (no puncturing).
— The UL/DL field in the U-SIG field is set to 1, or the UL/DL field in the U-SIG is set to 0 and the data field uses only one spatial stream.
— The Data field does not use UHR-MCS 15.

Otherwise, a UHR STA shall not transmit a UHR PPDU with IM enabled.

38.3.5.1 Supported coding for IM

The transmission of IM pilots is used only with LDPC. When IM is enabled, the number of data bits per symbol N_{DBPS}, coded bits per symbol N_{CBPS} and the number of data subcarriers N_{SD} are reduced, and the updated values are defined in 38.5 (Parameters for UHR-MCSs).

Copyright © 2025 IEEE. All rights reserved.
This is an unapproved IEEE Standards Draft, subject to change.

38.3.5.2 IM (#7569)pilot subcarriers

The IM pilots are used in every data OFDM symbol, and for a given BW, their subcarrier positions are fixed across all OFDM symbols. The IM pilots have zero energy. In order to spread the IM pilots in frequency, these zero valued pilots are inserted first into the LDPC Tone Mapper such that they occupy $k = 0 \ldots N_{SP,IM} - 1$ (as defined in 38.3.16.7 (LDPC tone mapper)) followed by the output of the constellation mapper which occupy $k = N_{SP,IM} \ldots N_{TM} - 1$.
For a 160MHz and a 320MHz PPDU, the IM pilots are inserted separately within each 80MHz subblock.

The number of IM pilots $N_{SP,IM}$ and the LDPC Tone Mapper block size N_{TM} are defined in Table 38-20 (Subcarrier allocation related constants for the UHR-modulated fields in a nonpunctured non-OFDMA UHR PPDU, when IM is enabled).

The IM pilot subcarrier indices can be computed directly from the LDPC Tone Mapper operation which is defined in 38.3.16.7 (LDPC tone mapper).

38.3.6 LDPC encoding

38.3.6.1 General

In addition to the (#9714)LDPC codeword block lengths of 648, 1296, and(#11591) 1944 bits, the UHR STA may also support codeword length of 3888 bits. The PPDU encoding parameters are listed in Table 38-15 (PPDU encoding parameters).

Table 38-15—PPDU encoding parameters

Range of N_{avbits} (bits)	Number of LDPC codewords (N_{CW})	LDPC codeword length L_{LDPC} (bits)
$N_{avbits} \le 648$	1	1296, if $N_{avbits} \ge N_{pld} + 912 \times (1\text{-}R)$ 648, otherwise
$648 < N_{avbits} \le 1296$	1	1944, if $N_{avbits} \ge N_{pld} + 1464 \times (1\text{-}R)$ 1296, otherwise
$1296 < N_{avbits} \le 1944$	1	1944
$1944 < N_{avbits} \le 2592$	2	1944, if $N_{avbits} \ge N_{pld} + 2916 \times (1\text{-}R)$ 1296, otherwise
$2592 < N_{avbits} \le 3888$	2	1944
$3888 < N_{avbits}$	$\left\lceil \frac{N_{pld}}{L_{\mathrm{LDPC}} \cdot R} \right\rceil$	3888, if 2xLDPC subfield in User Info field of the Trigger frame or in the User field of the UHR-SIG field is set to 1. 1944, otherwise

(#8778)The 2xLDPC subfield is defined in the User Info field of the Trigger frame and in the User field of the UHR-SIG field. (#8778)When $N_{avbits} \le 3888$ bits, the field 2xLDPC shall be set to 0. The subfield indicates whether the nominal LDPC codeword length of 3888 bits(#9716) is used in the PPDU, i.e., it is:

Copyright © 2025 IEEE. All rights reserved.
This is an unapproved IEEE Standards Draft, subject to change.

— 0 to indicate that the nominal LDPC codeword length of 648, 1296 or 1944 bits is being used.
— 1 to indicate that the nominal LDPC codeword length of 3888 bits is being used.

The specifications for the length 3888 LDPC codes are defined in 38.3.6.2 (Description of the LDPC codes of blocklength 3888 bits).

38.3.6.2 Description of the LDPC codes of blocklength 3888 bits

The parity check matrix H of the LDPC codes of block length = 3888 bits is described by an exponent matrix *E(H)* of lifting degree (i.e., sub block size) Z = 81.

$$E(H) = \begin{pmatrix} b_{1,1} & b_{1,2} & \cdots & b_{1,n-1} & b_{1,n} \\ b_{2,1} & b_{2,2} & \ddots & b_{2,n-1} & b_{2,n} \\ \vdots & \ddots & \ddots & \ddots & \vdots \\ b_{m-1,1} & b_{m-1,2} & \ddots & b_{m-1,n-1} & b_{m-1,n} \\ b_{m,1} & b_{m,2} & \cdots & b_{m,n-1} & b_{m,n} \end{pmatrix}$$

The integer $b_{i,j}$ is replaced by $Z \times Z$ circulant permutation matrix $C(b_{i,j})$ to obtain the parity check matrix *H*. i.e

$$H = \begin{pmatrix} C(b_{1,1}) & C(b_{1,2}) & \cdots & C(b_{1,n-1}) & C(b_{1,n}) \\ C(b_{2,1}) & C(b_{2,2}) & \ddots & C(b_{2,n-1}) & C(b_{2,n}) \\ \vdots & \ddots & \ddots & \ddots & \vdots \\ C(b_{m-1,1}) & C(b_{m-1,2}) & \ddots & C(b_{m-1,n-1}) & C(b_{m-1,n}) \\ C(b_{m,1}) & C(b_{m,2}) & \cdots & C(b_{m,n-1}) & C(b_{m,n}) \end{pmatrix}$$

For $d \geq 0$, $C(d)$ is the matrix obtained by cyclically shifting the identity matrix I_z (#6663, 7062), to the right by *d* positions. $C(-1)$ is the NULL matrix of size $Z \times Z$, which has all its entries set to 0. Note that, when $d \geq 0$, the first row of the matrix $C(d)$ will have 0 at all entries, except at the column position *d*, where it is set to 1.

For the code rate *R*, the size of the matrix *E(H)* is $48(1-R) \times 48$. The parity check matrix *H*(#8780, 9720) is a binary matrix of size $48(1-R)Z \times 48Z$.

Table 38-16—Exponent Matrix and Parity Matrix Size

Code Rate	Exponent Matrix	Exponent Matrix Size	Parity Check Matrix Size
1/2	E(H)_R_12	24 × 48	1944 × 3888
2/3	E(H)_R_23	16 × 48	1296 × 3888
3/4	E(H)_R_34	12 × 48	972 × 3888
5/6	E(H)_R_56	8 × 48	648 × 3888

E(H)_R_56=[

Copyright © 2025 IEEE. All rights reserved.
This is an unapproved IEEE Standards Draft, subject to change.

13,-1,-1,48,-1,80,-1,66,-1,4,74,-1,7,-1,-1,30,76,-1,-1,52,37,-1,-1,60,-1,-1,-1,49,73,-1,31,-1,-1,74,73,-1,-1,23,-1,-1,1,-1,0,-1,-1,-1,-1,-1
-1,13,48,-1,80,-1,66,-1,4,-1,-1,74,-1,7,30,-1,-1,76,52,-1,-1,37,60,-1,-1,-1,49,-1,-1,73,-1,31,74,-1,-1,73,23,-1,-1,-1,-1,1,-1,0,-1,-1,-1,-1
-1,69,-1,63,-1,74,56,-1,64,-1,-1,77,57,-1,-1,65,6,-1,-1,16,-1,51,-1,-1,64,-1,-1,-1,68,-1,-1,9,48,-1,-1,62,54,-1,27,-1,-1,-1,0,-1,0,-1,-1,-1
69,-1,63,-1,74,-1,-1,56,-1,64,77,-1,-1,57,65,-1,-1,6,16,-1,51,-1,-1,-1,-1,64,-1,-1,-1,68,9,-1,-1,48,62,-1,-1,54,-1,27,-1,-1,-1,0,-1,0,-1,-1
51,-1,15,-1,-1,0,-1,80,-1,24,-1,25,-1,42,54,-1,-1,44,71,-1,71,-1,-1,9,67,-1,-1,35,-1,-1,-1,58,-1,-1,-1,29,-1,-1,53,-1,0,-1,-1,-1,0,-1,0,-1
-1,51,-1,15,0,-1,80,-1,24,-1,25,-1,42,-1,-1,54,44,-1,-1,71,-1,71,9,-1,-1,67,35,-1,-1,-1,58,-1,-1,-1,29,-1,-1,-1,-1,53,-1,0,-1,-1,-1,0,-1,0
-1,16,29,-1,36,-1,-1,41,-1,44,56,-1,-1,59,-1,37,-1,50,24,-1,-1,-1,-1,65,4,-1,65,-1,52,-1,-1,-1,4,-1,-1,-1,-1,73,-1,52,1,-1,-1,-1,-1,-1,0,-1
16,-1,-1,29,-1,36,41,-1,44,-1,-1,56,59,-1,37,-1,50,-1,-1,24,-1,-1,65,-1,-1,4,-1,65,-1,52,-1,-1,-1,4,-1,-1,73,-1,52,-1,-1,1,-1,-1,-1,-1,-1,0

]

E(H)_R_34=[

48,-1,-1,29,28,-1,39,-1,9,-1,61,-1,-1,-1,-1,-1,-1,-1,63,-1,45,-1,-1,80,-1,-1,-1,-1,-1,-1,37,-1,-1,32,-1,22,1,-1,0,-1,-1,-1,-1,-1,-1,-1,-1,-1
-1,48,29,-1,-1,28,-1,39,-1,9,-1,61,-1,-1,-1,-1,-1,-1,-1,63,-1,45,80,-1,-1,-1,-1,-1,-1,-1,-1,37,32,-1,22,-1,-1,1,-1,0,-1,-1,-1,-1,-1,-1,-1,-1
4,-1,49,-1,-1,42,-1,48,11,-1,-1,30,-1,-1,-1,-1,-1,-1,-1,49,-1,-1,17,41,-1,37,-1,-1,15,-1,-1,54,-1,-1,-1,-1,-1,-1,-1,-1,0,-1,0,-1,-1,-1,-1,-1,-1
-1,4,-1,49,42,-1,48,-1,-1,11,30,-1,-1,-1,-1,-1,-1,-1,-1,49,17,-1,-1,41,-1,37,15,-1,-1,-1,-1,54,-1,-1,-1,-1,-1,-1,-1,-1,0,-1,0,-1,-1,-1,-1,-1,-1
-1,35,-1,76,78,-1,51,-1,37,-1,35,-1,21,-1,-1,-1,-1,17,64,-1,-1,-1,-1,-1,-1,-1,59,-1,7,-1,-1,-1,-1,-1,-1,32,-1,-1,-1,-1,0,-1,0,-1,-1,-1,-1,-1
35,-1,76,-1,-1,78,-1,51,-1,37,-1,35,-1,21,-1,-1,17,-1,-1,64,-1,-1,-1,-1,-1,-1,-1,59,-1,7,-1,-1,-1,-1,32,-1,-1,-1,-1,-1,-1,0,-1,0,-1,-1,-1,-1
9,-1,-1,65,44,-1,9,-1,-1,54,-1,56,73,-1,-1,34,42,-1,-1,-1,-1,-1,-1,-1,-1,35,-1,-1,-1,-1,-1,-1,46,-1,-1,39,0,-1,-1,-1,-1,-1,0,-1,0,-1,-1,-1
-1,9,65,-1,-1,44,-1,9,54,-1,56,-1,-1,73,34,-1,-1,42,-1,-1,-1,-1,-1,-1,-1,35,-1,-1,-1,-1,-1,-1,-1,-1,46,39,-1,-1,0,-1,-1,-1,-1,-1,0,-1,0,-1,-1
-1,3,62,-1,-1,7,-1,80,-1,68,-1,26,-1,-1,-1,80,55,-1,-1,-1,36,-1,-1,-1,-1,26,-1,-1,9,-1,-1,-1,-1,72,-1,-1,-1,-1,-1,-1,-1,-1,-1,-1,0,-1,0,-1
3,-1,-1,62,7,-1,80,-1,68,-1,26,-1,-1,-1,80,-1,-1,55,-1,-1,-1,36,-1,-1,26,-1,-1,-1,-1,9,-1,-1,72,-1,-1,-1,-1,-1,-1,-1,-1,-1,-1,-1,-1,0,-1,0
-1,26,-1,75,33,-1,21,-1,69,-1,59,-1,3,-1,-1,38,-1,-1,-1,-1,-1,-1,35,-1,-1,-1,-1,62,36,-1,-1,26,-1,-1,-1,-1,1,-1,-1,-1,-1,-1,-1,-1,-1,-1,0,-1
26,-1,75,-1,-1,33,-1,21,-1,69,-1,59,-1,3,38,-1,-1,-1,-1,-1,-1,-1,-1,35,-1,-1,62,-1,-1,36,26,-1,-1,-1,-1,-1,-1,1,-1,-1,-1,-1,-1,-1,-1,-1,-1,0

]

E(H)_R_23=[

61,-1,75,-1,4,-1,63,-1,-1,56,-1,-1,-1,-1,-1,-1,-1,-1,-1,-1,-1,-1,8,-1,-1,-1,-1,2,-1,17,25,-1,1,-1,0,-1,-1,-1,-1,-1,-1,-1,-1,-1,-1,-1,-1,-1
-1,61,-1,75,-1,4,-1,63,56,-1,-1,-1,-1,-1,-1,-1,-1,-1,-1,-1,-1,-1,8,-1,-1,2,-1,17,-1,-1,25,-1,1,-1,0,-1,-1,-1,-1,-1,-1,-1,-1,-1,-1,-1,-1
-1,56,-1,74,77,-1,20,-1,-1,-1,-1,-1,-1,-1,64,-1,24,-1,-1,4,-1,67,-1,-1,-1,7,-1,-1,-1,-1,-1,-1,-1,-1,0,-1,0,-1,-1,-1,-1,-1,-1,-1,-1,-1,-1
56,-1,74,-1,-1,77,-1,20,-1,-1,-1,-1,-1,-1,-1,64,-1,24,4,-1,67,-1,-1,-1,7,-1,-1,-1,-1,-1,-1,-1,-1,-1,0,-1,0,-1,-1,-1,-1,-1,-1,-1,-1,-1,-1
28,-1,21,-1,68,-1,-1,10,7,-1,14,-1,65,-1,-1,-1,-1,-1,-1,-1,23,-1,-1,-1,-1,-1,-1,-1,-1,75,-1,-1,-1,-1,-1,-1,0,-1,0,-1,-1,-1,-1,-1,-1,-1,-1,-1
-1,28,-1,21,-1,68,10,-1,-1,7,-1,14,-1,65,-1,-1,-1,-1,-1,-1,-1,23,-1,-1,-1,-1,-1,-1,75,-1,-1,-1,-1,-1,-1,-1,-1,0,-1,0,-1,-1,-1,-1,-1,-1,-1,-1
-1,48,38,-1,43,-1,78,-1,76,-1,-1,-1,-1,-1,-1,-1,-1,-1,5,-1,36,-1,-1,-1,15,-1,72,-1,-1,-1,-1,-1,-1,-1,-1,-1,-1,-1,-1,0,-1,0,-1,-1,-1,-1,-1,-1,-1
48,-1,-1,38,-1,43,-1,78,-1,76,-1,-1,-1,-1,-1,-1,-1,-1,-1,5,-1,36,-1,-1,-1,15,-1,72,-1,-1,-1,-1,-1,-1,-1,-1,-1,-1,-1,-1,0,-1,0,-1,-1,-1,-1,-1,-1
40,-1,2,-1,-1,53,-1,25,-1,-1,-1,52,62,-1,-1,-1,20,-1,-1,-1,-1,-1,-1,44,-1,-1,-1,-1,-1,-1,-1,-1,0,-1,-1,-1,-1,-1,-1,-1,0,-1,0,-1,-1,-1,-1
-1,40,-1,2,53,-1,25,-1,-1,-1,52,-1,-1,62,-1,-1,-1,20,-1,-1,-1,-1,44,-1,-1,-1,-1,-1,-1,-1,-1,-1,0,-1,-1,-1,-1,-1,-1,-1,0,-1,0,-1,-1,-1,-1
69,-1,-1,23,64,-1,10,-1,22,-1,-1,-1,21,-1,-1,-1,-1,-1,-1,-1,-1,-1,-1,-1,-1,68,-1,23,-1,29,-1,-1,-1,-1,-1,-1,-1,-1,-1,-1,-1,-1,0,-1,0,-1,-1,-1
-1,69,23,-1,-1,64,-1,10,-1,22,-1,-1,-1,21,-1,-1,-1,-1,-1,-1,-1,-1,-1,-1,-1,68,-1,23,-1,29,-1,-1,-1,-1,-1,-1,-1,-1,-1,-1,-1,-1,-1,-1,0,-1,0,-1,-1
12,-1,-1,0,-1,68,-1,20,55,-1,61,-1,-1,-1,40,-1,-1,-1,-1,-1,-1,-1,-1,52,-1,-1,-1,-1,-1,-1,44,-1,-1,-1,-1,-1,-1,-1,-1,-1,-1,-1,-1,-1,0,-1,0,-1
-1,12,0,-1,68,-1,20,-1,-1,55,-1,61,-1,-1,-1,40,-1,-1,-1,-1,-1,-1,52,-1,-1,-1,-1,-1,-1,-1,-1,44,-1,-1,-1,-1,-1,-1,-1,-1,-1,-1,-1,-1,-1,0,-1,0
-1,58,-1,8,-1,34,-1,64,-1,78,-1,-1,-1,-1,-1,11,-1,-1,78,24,-1,-1,-1,-1,-1,-1,-1,-1,-1,-1,-1,-1,58,1,-1,-1,-1,-1,-1,-1,-1,-1,-1,-1,-1,-1,0,-1
58,-1,8,-1,34,-1,64,-1,78,-1,-1,-1,-1,-1,-1,11,78,-1,-1,24,-1,-1,-1,-1,-1,-1,-1,-1,-1,-1,58,-1,-1,1,-1,-1,-1,-1,-1,-1,-1,-1,-1,-1,-1,-1,0

]

E(H)_R_12 = [

-1,57,-1,-1,-1,-1,-1,-1,-1,50,-1,-1,11,-1,-1,-1,50,-1,-1,-1,-1,79,-1,-1,1,-1,0,-1,-1,-1,-1,-1,-1,-1,-1,-1,-1,-1,-1,-1,-1,-1,-1,-1,-1,-1,-1
57,-1,-1,-1,-1,-1,-1,-1,50,-1,-1,-1,-1,11,-1,-1,-1,50,-1,-1,79,-1,-1,-1,-1,1,-1,0,-1,-1,-1,-1,-1,-1,-1,-1,-1,-1,-1,-1,-1,-1,-1,-1,-1,-1,-1,-1
-1,3,-1,-1,-1,28,-1,-1,-1,0,-1,-1,-1,-1,-1,-1,-1,55,-1,-1,7,-1,-1,-1,-1,-1,-1,-1,0,-1,0,-1,-1,-1,-1,-1,-1,-1,-1,-1,-1,-1,-1,-1,-1,-1,-1,-1,-1
3,-1,-1,-1,28,-1,-1,-1,0,-1,-1,-1,-1,-1,-1,-1,-1,55,7,-1,-1,-1,-1,-1,-1,-1,-1,0,-1,0,-1,-1,-1,-1,-1,-1,-1,-1,-1,-1,-1,-1,-1,-1,-1,-1,-1,-1

Copyright © 2025 IEEE. All rights reserved.
This is an unapproved IEEE Standards Draft, subject to change.

30,-1,-1,-1,-1,-1,-1,-1,-1,24,37,-1,-1,-1,-1,-1,56,-1,-1,14,-1,-1,-1,-1,-1,-1,-1,-1,0,-1,0,-1,-1,-1,-1,-1,-1,-1,-1,-1,-1,-1,-1,-1,-1,-1,-1,-1,-1
-1,30,-1,-1,-1,-1,-1,-1,24,-1,-1,37,-1,-1,-1,-1,-1,56,14,-1,-1,-1,-1,-1,-1,-1,-1,-1,-1,0,-1,0,-1,-1,-1,-1,-1,-1,-1,-1,-1,-1,-1,-1,-1,-1,-1,-1
62,-1,53,-1,-1,-1,-1,-1,-1,53,-1,-1,-1,-1,3,-1,35,-1,-1,-1,-1,-1,-1,-1,-1,-1,-1,-1,-1,-1,0,-1,0,-1,-1,-1,-1,-1,-1,-1,-1,-1,-1,-1,-1,-1,-1,-1
-1,62,-1,53,-1,-1,-1,-1,53,-1,-1,-1,-1,-1,-1,3,-1,35,-1,-1,-1,-1,-1,-1,-1,-1,-1,-1,-1,-1,-1,0,-1,0,-1,-1,-1,-1,-1,-1,-1,-1,-1,-1,-1,-1,-1,-1
-1,40,-1,-1,-1,-1,20,-1,66,-1,-1,-1,-1,-1,-1,22,-1,28,-1,-1,-1,-1,-1,-1,-1,-1,-1,-1,-1,-1,-1,-1,0,-1,0,-1,-1,-1,-1,-1,-1,-1,-1,-1,-1,-1,-1,-1,-1
40,-1,-1,-1,-1,-1,-1,20,-1,66,-1,-1,-1,-1,22,-1,28,-1,-1,-1,-1,-1,-1,-1,-1,-1,-1,-1,-1,-1,-1,-1,0,-1,0,-1,-1,-1,-1,-1,-1,-1,-1,-1,-1,-1,-1,-1,-1
0,-1,-1,-1,-1,-1,-1,-1,8,-1,-1,-1,42,-1,-1,-1,-1,50,-1,-1,-1,-1,8,-1,-1,-1,-1,-1,-1,-1,-1,-1,-1,0,-1,0,-1,-1,-1,-1,-1,-1,-1,-1,-1,-1,-1,-1,-1,-1
-1,0,-1,-1,-1,-1,-1,-1,-1,8,-1,-1,-1,42,-1,-1,50,-1,-1,-1,-1,-1,-1,8,-1,-1,-1,-1,-1,-1,-1,-1,-1,-1,0,-1,0,-1,-1,-1,-1,-1,-1,-1,-1,-1,-1,-1,-1
69,-1,79,-1,79,-1,-1,-1,-1,-1,-1,-1,-1,56,-1,-1,52,-1,-1,-1,-1,-1,-1,-1,0,-1,-1,-1,-1,-1,-1,-1,-1,-1,-1,-1,0,-1,0,-1,-1,-1,-1,-1,-1,-1,-1,-1,-1
-1,69,-1,79,-1,79,-1,-1,-1,-1,-1,-1,56,-1,-1,-1,-1,52,-1,-1,-1,-1,-1,-1,-1,0,-1,-1,-1,-1,-1,-1,-1,-1,-1,-1,-1,0,-1,0,-1,-1,-1,-1,-1,-1,-1,-1,-1
65,-1,-1,-1,-1,-1,-1,-1,38,-1,57,-1,-1,-1,-1,-1,72,-1,-1,-1,27,-1,-1,-1,-1,-1,-1,-1,-1,-1,-1,-1,-1,-1,-1,-1,-1,-1,-1,0,-1,0,-1,-1,-1,-1,-1,-1,-1,-1
-1,65,-1,-1,-1,-1,-1,-1,-1,38,-1,57,-1,-1,-1,-1,-1,72,-1,-1,-1,27,-1,-1,-1,-1,-1,-1,-1,-1,-1,-1,-1,-1,-1,-1,-1,-1,-1,0,-1,0,-1,-1,-1,-1,-1,-1,-1,-1
-1,64,-1,-1,-1,-1,-1,-1,14,-1,52,-1,-1,-1,-1,-1,-1,30,-1,-1,-1,-1,-1,32,-1,-1,-1,-1,-1,-1,-1,-1,-1,-1,-1,-1,-1,-1,-1,-1,-1,0,-1,0,-1,-1,-1,-1,-1,-1
64,-1,-1,-1,-1,-1,-1,-1,-1,14,-1,52,-1,-1,-1,-1,-1,30,-1,-1,-1,-1,-1,32,-1,-1,-1,-1,-1,-1,-1,-1,-1,-1,-1,-1,-1,-1,-1,-1,-1,-1,0,-1,0,-1,-1,-1,-1,-1
-1,-1,-1,45,-1,-1,-1,70,0,-1,-1,-1,-1,-1,-1,-1,77,-1,9,-1,-1,-1,-1,-1,-1,-1,-1,-1,-1,-1,-1,-1,-1,-1,-1,-1,-1,-1,-1,-1,-1,-1,-1,-1,0,-1,0,-1,-1,-1
-1,-1,45,-1,-1,-1,70,-1,-1,0,-1,-1,-1,-1,-1,-1,-1,77,-1,9,-1,-1,-1,-1,-1,-1,-1,-1,-1,-1,-1,-1,-1,-1,-1,-1,-1,-1,-1,-1,-1,-1,-1,-1,0,-1,0,-1,-1
2,-1,56,-1,-1,-1,-1,57,35,-1,-1,-1,-1,-1,-1,-1,-1,-1,-1,-1,-1,12,-1,-1,-1,-1,-1,-1,-1,-1,-1,-1,-1,-1,-1,-1,-1,-1,-1,-1,-1,-1,-1,-1,-1,-1,0,-1,0,-1
-1,2,-1,56,-1,-1,57,-1,-1,35,-1,-1,-1,-1,-1,-1,-1,-1,-1,-1,-1,12,-1,-1,-1,-1,-1,-1,-1,-1,-1,-1,-1,-1,-1,-1,-1,-1,-1,-1,-1,-1,-1,-1,-1,-1,0,-1,0
-1,24,-1,-1,-1,61,-1,-1,-1,60,-1,-1,-1,-1,-1,27,51,-1,-1,-1,-1,-1,16,-1,1,-1,-1,-1,-1,-1,-1,-1,-1,-1,-1,-1,-1,-1,-1,-1,-1,-1,-1,-1,-1,-1,-1,0,-1
24,-1,-1,-1,61,-1,-1,-1,60,-1,-1,-1,-1,-1,27,-1,-1,51,-1,-1,-1,-1,-1,16,-1,1,-1,-1,-1,-1,-1,-1,-1,-1,-1,-1,-1,-1,-1,-1,-1,-1,-1,-1,-1,-1,-1,-1,0
]

38.3.7 UHR PPDU formats

Three UHR PPDU formats are defined: UHR MU PPDU, UHR TB PPDU and UHR ELR PPDU.

The format of the UHR MU PPDU is defined in Figure 38-4 (UHR MU PPDU format). This format is used for transmission to one or more users. The PPDU is not a response to a triggering frame. In the UHR MU PPDU, the UHR-SIG field is present.

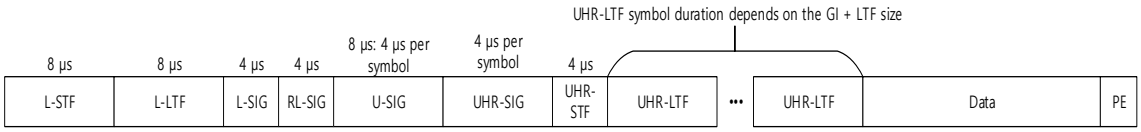

Figure 38-4—UHR MU PPDU format

The format of the UHR TB PPDU is defined in Figure 38-5 (UHR TB PPDU format). This format is used for a transmission that is a response to a triggering frame from an AP. In the UHR TB PPDU, the UHR-SIG field is not present and the duration of the UHR-STF field is twice the duration of the UHR-STF field in the UHR MU PPDU.

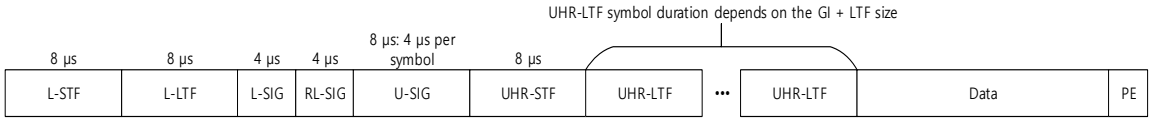

Figure 38-5—UHR TB PPDU format

Copyright © 2025 IEEE. All rights reserved.
This is an unapproved IEEE Standards Draft, subject to change.

The format of the UHR ELR PPDU is defined in Figure 38-6 (UHR ELR PPDU format). This format is used for SU transmission.

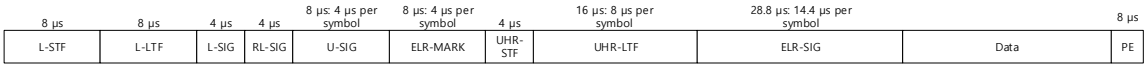

Figure 38-6—UHR ELR PPDU format

The fields of the UHR PPDU format are summarized in Table 38-17 (UHR PPDU fields).

Table 38-17—UHR PPDU fields

Field	Description
L-STF	Non-HT Short Training field
L-LTF	Non-HT Long Training field
L-SIG	Non-HT SIGNAL field
RL-SIG	Repeated Non-HT SIGNAL field
U-SIG	Universal SIGNAL field
ELR-MARK	ELR MARK field
UHR-SIG	UHR SIGNAL field
UHR-STF	UHR Short Training field
UHR-LTF	UHR Long Training field
ELR-SIG	ELR SIGNAL field
Data	The Data field carrying the PSDU(s)
PE	Packet Extension field

The L-STF, L-LTF, L-SIG, RL-SIG, U-SIG, UHR-STF, UHR-LTF, and PE fields are present in all UHR PPDU formats. The UHR-SIG field is present only in the UHR MU PPDU. The ELR-MARK and ELR-SIG fields are present only in the UHR ELR PPDU format. The PE field is defined in 38.3.17 (Packet extension).

The L-STF, L-LTF, L-SIG, RL-SIG, U-SIG, ELR-MARK, and UHR-SIG fields are referred to as pre-UHR modulated fields, while the UHR-STF, UHR-LTF, ELR-SIG, Data, and PE fields are referred to as the UHR modulated fields.

In the UHR TB PPDU, the pre-UHR modulated fields, which include L-STF, L-LTF, L-SIG, RL-SIG, and U-SIG fields, are sent only on the 20 MHz channels where the STA's UHR modulated fields are present. If the STA's UHR modulated fields occupy more than one 20 MHz channel, the pre-UHR modulated fields are duplicated over all 20 MHz channels where UHR modulated fields are occupied.

A signal extension as described in 10.3.8 (Signal extension) shall be present in a transmitted PPDU if the TXVECTOR parameter NO_SIG_EXTN is false and one of the following conditions applies:

— The TXVECTOR parameter FORMAT is UHR, EHT, HE, HT_MF, or HT_GF.

— The TXVECTOR parameter FORMAT is NON_HT and the TXVECTOR parameter NON_HT_MODULATION is ERP-OFDM or NON_HT_DUP_OFDM.

Copyright © 2025 IEEE. All rights reserved.
This is an unapproved IEEE Standards Draft, subject to change.

A signal extension shall be assumed to be present (for the purpose of timing of PHY-RXEND.indication and PHY-CCA.indication primitives, as described below and in 38.3.29 (UHR receive procedure)) in a received PPDU if one of the following conditions applies:

— The RXVECTOR parameter FORMAT is UHR, EHT, HE, HT_MF, or HT_GF.

— The RXVECTOR parameter FORMAT is NON_HT and the RXVECTOR parameter NON_HT_MODULATION is ERP-OFDM or NON_HT_DUP_OFDM.

A PPDU containing a signal extension is called a signal extended PPDU. When transmitting a signal extended PPDU, the PHY-TXEND.indication primitive shall be emitted a period of aSignalExtension after the end of the actual ending time of the PPDU. When receiving a signal extended PPDU, the PHY-RXEND.indication primitive shall be emitted a period of aSignalExtension after the end of the actual ending time of the PPDU.

38.3.8 Enhanced long range PPDU

A UHR Enhanced Long Range (ELR) PPDU can be used to overcome the link budget imbalance between downlink and uplink and can be used to achieve higher data rate when compared to a DSSS PPDU defined in Clause 15 (DSSS PHY specification for the 2.4 GHz band designated for ISM applications).

A UHR ELR PPDU is applicable for 2.4 GHz, 5 GHz, and 6 GHz bands in uplink, and only for 2.4 GHz in downlink. A UHR ELR PPDU is defined only for 20 MHz PPDU bandwidth, a single spatial stream and UHR-MCSs 0 and 1 with four times frequency domain duplication over 52-tone RRUs(#9134) in primary 20 MHz channel. UHR ELR PPDU supports using BCC and LDPC coding with nominal codeword block length up to 1944 bits. A UHR ELR PPDU sets the PPDU Type And Compression Mode subfield in the U-SIG field (Table 38-26 (U-SIG field of a UHR ELR PPDU)) to 3, and includes the ELR-MARK field right after the U-SIG field.

38.3.9 Transmitter block diagram

The generation of each field in a UHR PPDU uses many of the following blocks:

a) Pre-FEC PHY padding
b) Scrambler
c) FEC (BCC or LDPC) encoders
d) Post-FEC PHY padding
e) Stream parser
f) Segment parser (for RU or MRU size larger than 996 tones)
g) BCC interleaver
h) Constellation mapper
i) DCM tone mapper
j) Pilot insertion
k) Replication over multiple 20 MHz (for bandwidth greater than 20 MHz)
l) LDPC tone mapper
m) Segment deparser
n) Frequency domain duplication over 52-tone RRUs(#9134) if the PPDU is a UHR ELR PPDU.
o) CSD per spatial stream insertion
p) Spatial mapper

Copyright © 2025 IEEE. All rights reserved.
This is an unapproved IEEE Standards Draft, subject to change.

q) Frequency mapping

r) IDFT

s) CSD per chain insertion

t) GI insertion

u) Windowing

Figure 38-7 (Transmitter block diagram for the L-SIG, RL-SIG, and U-SIG fields for a UHR MU PPDU) to Figure 38-17 (Transmitter block diagram for the Data field of a UHR ELR PPDU transmission with LDPC encoding) show example transmitter block diagrams. The actual structure of the transmitter is implementation dependent.

In particular, Figure 38-7 (Transmitter block diagram for the L-SIG, RL-SIG, and U-SIG fields for a UHR MU PPDU) shows the transmit process for the L-SIG, RL-SIG, and U-SIG fields of a UHR MU PPDU using one 80 MHz frequency subblock. These transmit blocks are also used to generate the L-STF and L-LTF fields of the UHR MU PPDU with the following exceptions:

— The BCC encoder and interleaver as well as constellation mapper are not used when generating the L-STF and L-LTF fields.

NOTE—For a UHR MU PPDU, the duplication on 20 MHz channels is subject to the availability of 20 MHz channels in the case of preamble puncturing. The U-SIG field contents may be different in different 80 MHz frequency subblocks.

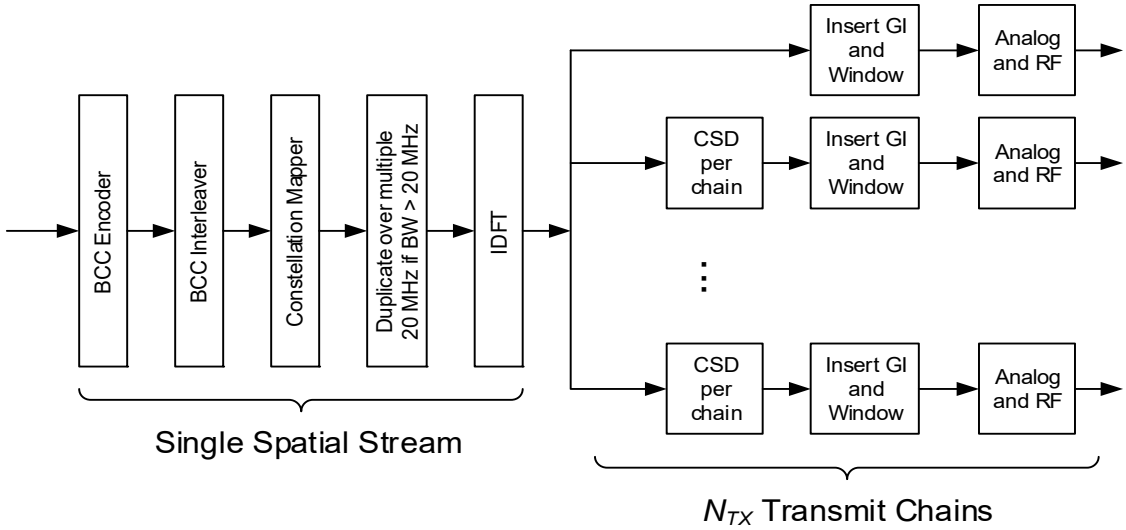

Figure 38-7—Transmitter block diagram for the L-SIG, RL-SIG, and U-SIG fields for a UHR MU PPDU

Figure 38-8 (Transmitter block diagram for the L-SIG, RL-SIG, and U-SIG fields of a UHR TB PPDU) shows the transmit process for the L-SIG, RL-SIG, and U-SIG fields of a UHR TB PPDU. These transmit blocks are also used to generate the L-STF and L-LTF fields of the UHR TB PPDU with the following exception:

— The BCC encoder, interleaver, and constellation mapper are not used when generating the L-STF and L-LTF fields.

Copyright © 2025 IEEE. All rights reserved.
This is an unapproved IEEE Standards Draft, subject to change.

The L-SIG, RL-SIG, and U-SIG fields are duplicated over multiple 20 MHz subchannels if the UHR modulated fields are allocated in an RU or MRU > 242 tones.

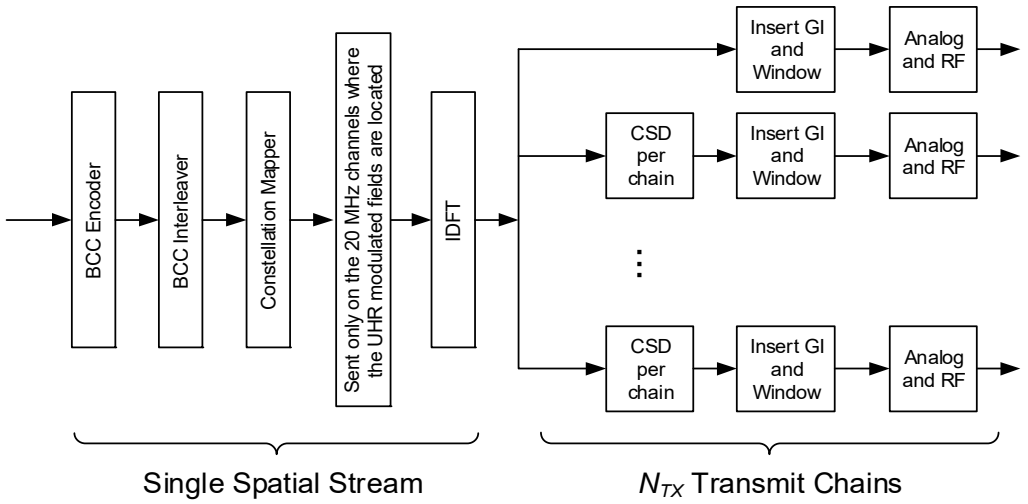

Figure 38-8—Transmitter block diagram for the L-SIG, RL-SIG, and U-SIG fields of a UHR TB PPDU

Figure 38-9 (Transmitter block diagram for the UHR-SIG fields of a UHR MU PPDU) shows the transmit process for the UHR-SIG field of a UHR MU PPDU. This block diagram is for transmitting UHR-SIG in one 20 MHz subchannel. Refer to 38.3.15.9.2 (UHR-SIG content channels) for the methods of transmitting UHR-SIG in 40 MHz, 80 MHz, 160 MHz, and 320 MHz.

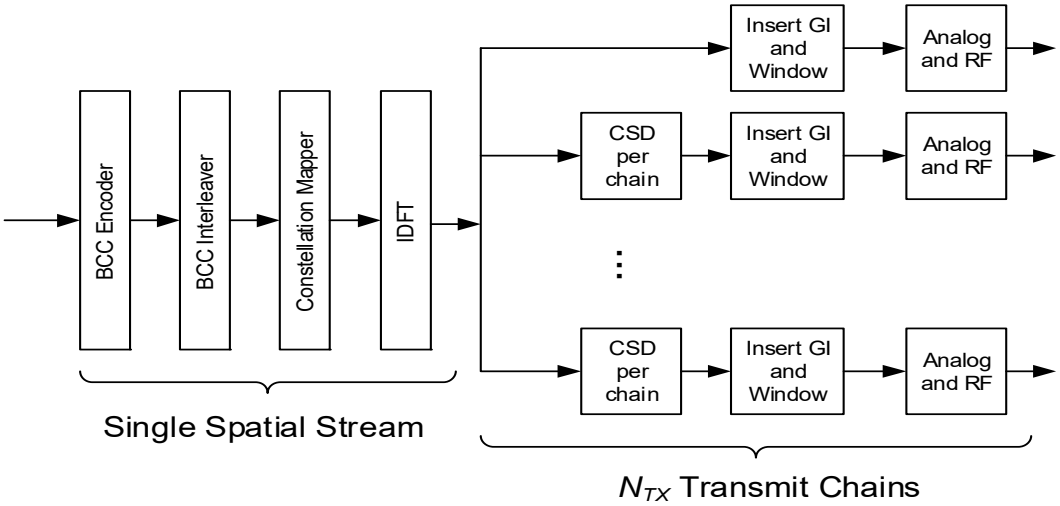

Figure 38-9—Transmitter block diagram for the UHR-SIG fields of a UHR MU PPDU

Figure 38-10 (Transmitter block diagram for the UHR ELR-SIG field of a UHR ELR PPDU) shows the transmit process for the L-SIG, RL-SIG, and U-SIG fields of a UHR ELR PPDU. These transmit blocks are also used to generate the L-STF and L-LTF fields of the UHR ELR PPDU with the following exceptions:

— The BCC encoder and interleaver as well as constellation mapper are not used when generating the L-STF and L-LTF fields.

NOTE—For a UHR ELR PPDU, the channel bandwidth is fixed to 20 MHz.

Copyright © 2025 IEEE. All rights reserved.
This is an unapproved IEEE Standards Draft, subject to change.

Figure 38-10 (Transmitter block diagram for the UHR ELR-SIG field of a UHR ELR PPDU) shows the transmit process for the UHR ELR-SIG field of a UHR ELR PPDU.

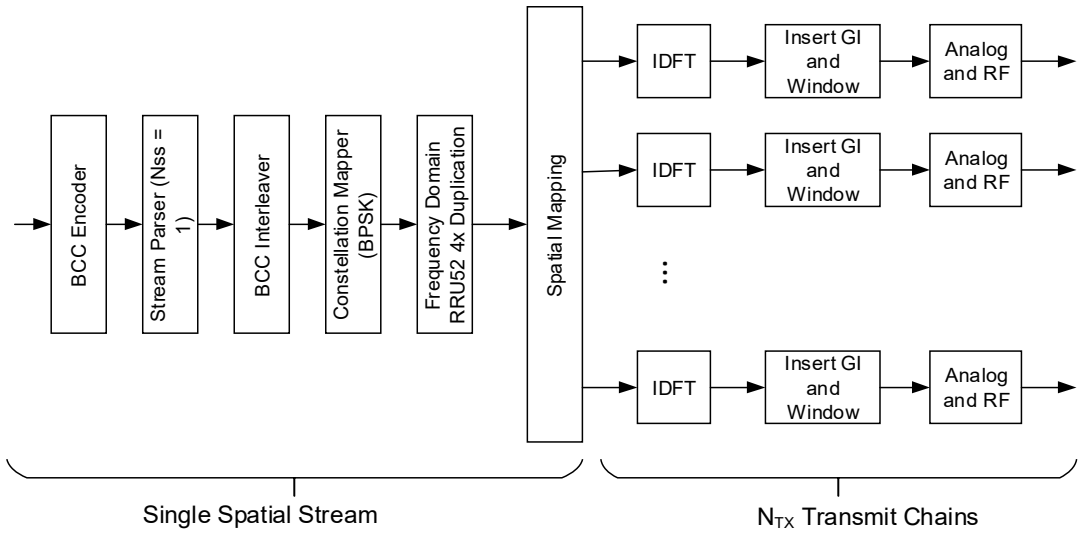

Figure 38-10—Transmitter block diagram for the UHR ELR-SIG field of a UHR ELR PPDU

Figure 38-11 (Transmitter block diagram for the UL transmission or DL non-MU-MIMO transmission of a Data field with BCC encoding on an RU or MRU size equal to or smaller than a 242-tone RU) shows the transmitter blocks for the UL transmission or DL non-MU-MIMO transmission of a Data field with BCC encoding on an RU or MRU smaller than or equal to 242 tone if the number of spatial streams is less than or equal to 4. Figure 38-12 (Transmitter block diagram for the UL transmission or DL non-MU-MIMO transmission of a Data field with LDPC encoding on an RU or MRU size equal to or smaller than a 996-tone RU) applies to the Data field of a UHR MU PPDU that is transmitted on an RU or MRU allocated to a single user and the Data field of a UHR TB PPDU (whether or not it is spatially multiplexed with other users).

A subset of these transmitter blocks consisting of the CSD blocks, as well as the blocks to the right of, and including, the spatial mapping block, are also used to generate the UHR-LTF and UHR-STF fields.

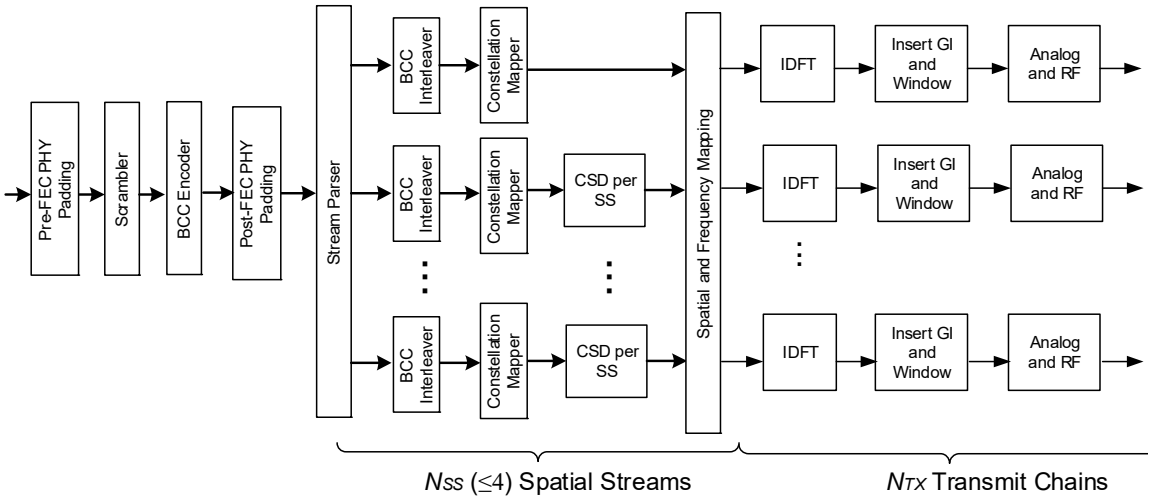

Figure 38-11—Transmitter block diagram for the UL transmission or DL non-MU-MIMO transmission of a Data field with BCC encoding on an RU or MRU size equal to or smaller than a 242-tone RU

Copyright © 2025 IEEE. All rights reserved.
This is an unapproved IEEE Standards Draft, subject to change.

Figure 38-12 (Transmitter block diagram for the UL transmission or DL non-MU-MIMO transmission of a Data field with LDPC encoding on an RU or MRU size equal to or smaller than a 996-tone RU) shows the transmitter blocks for the UL transmission or DL non-MU-MIMO transmission of a Data field with LDPC encoding on an RU or MRU that is the same size or smaller than a 996-tone RU. Figure 38-12 (Transmitter block diagram for the UL transmission or DL non-MU-MIMO transmission of a Data field with LDPC encoding on an RU or MRU size equal to or smaller than a 996-tone RU) applies to the Data field of a UHR MU PPDU that is transmitted on an RU or MRU allocated to a single user and the Data field of a UHR TB PPDU (whether or not it is spatially multiplexed with other users).

NOTE—In UEQM modulation, the maximum number of spatial streams is less than or equal to four.

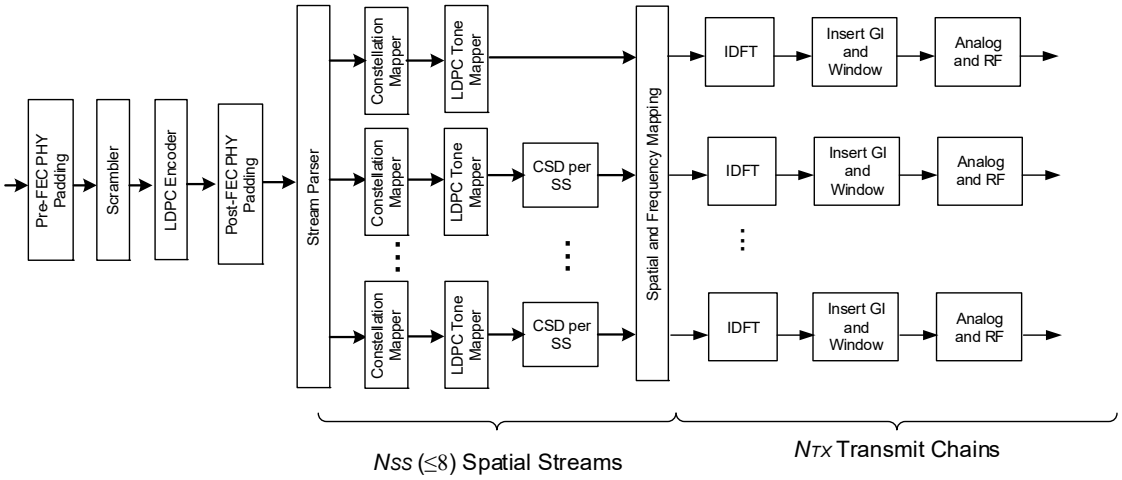

Figure 38-12—Transmitter block diagram for the UL transmission or DL non-MU-MIMO transmission of a Data field with LDPC encoding on an RU or MRU size equal to or smaller than a 996-tone RU

Figure 38-13 (Transmitter block diagram for the DL MU-MIMO transmission of a Data field with LDPC encoding on an RU or MRU equal to or smaller than a 996-tone RU) shows the transmitter blocks for the

Copyright © 2025 IEEE. All rights reserved.
This is an unapproved IEEE Standards Draft, subject to change.

transmission, in a UHR MU PPDU, of the Data field with LDPC encoding on a 242-, 484-, 484+242-, or 996-tone RU or MRU allocated to more than one user.

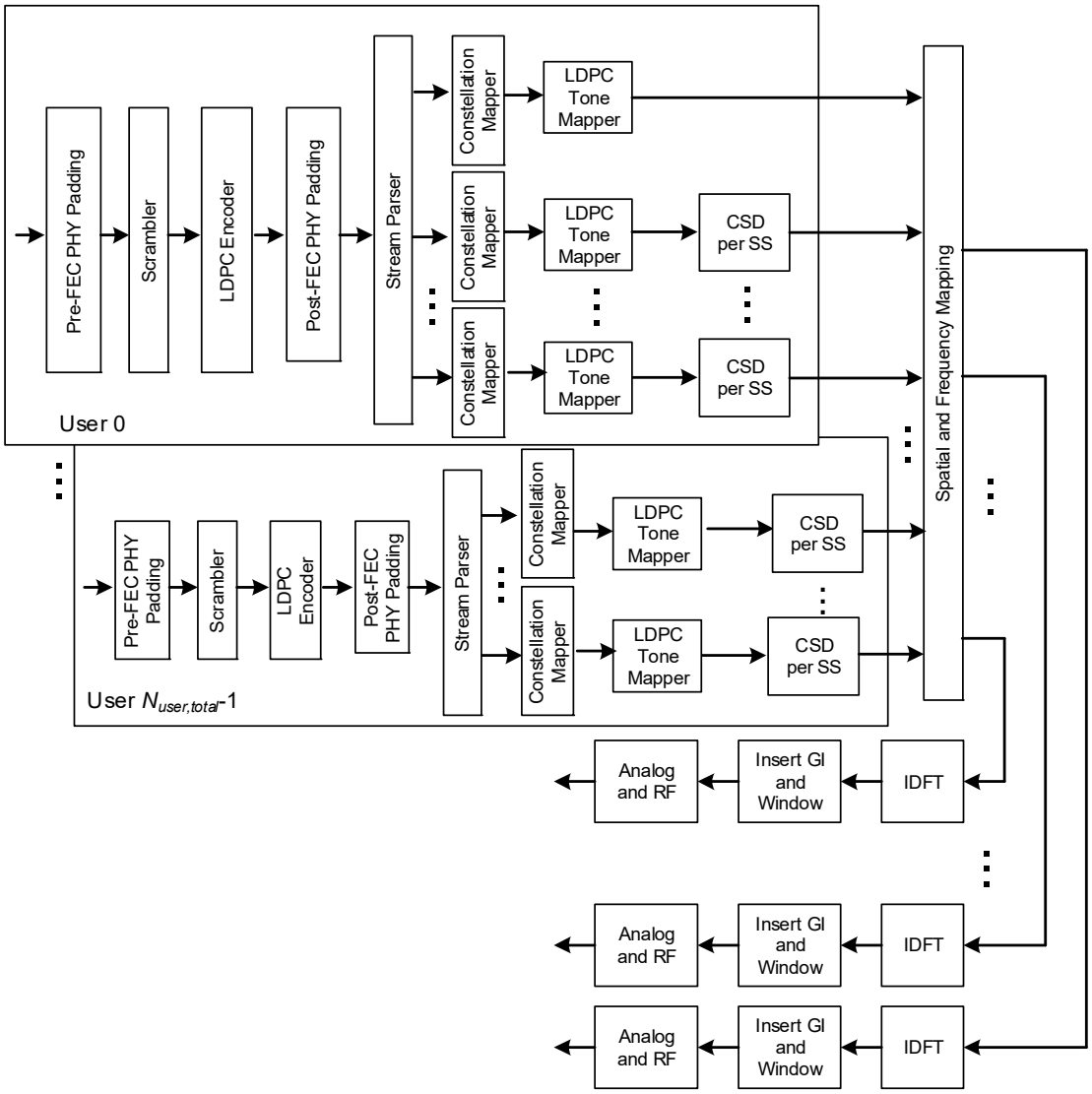

Figure 38-13—Transmitter block diagram for the DL MU-MIMO transmission of a Data field with LDPC encoding on an RU or MRU equal to or smaller than a 996-tone RU

Copyright © 2025 IEEE. All rights reserved.
This is an unapproved IEEE Standards Draft, subject to change.

Figure 38-14 (Transmitter block diagram for the Data field of a UHR SU transmission with LDPC encoding on RU or MRU size larger than a 996-tone RU) shows the transmitter blocks used to generate the Data field of a single-user UHR transmission with LDPC encoding on RU or MRU size larger than 996 tone.

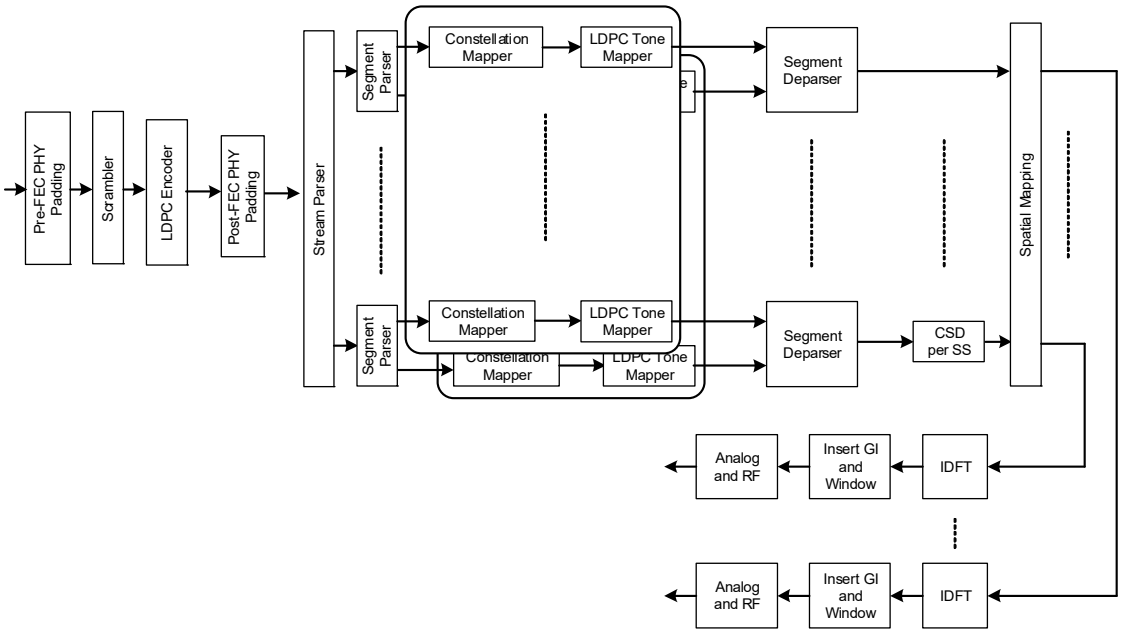

Figure 38-14—Transmitter block diagram for the Data field of a UHR SU transmission with LDPC encoding on RU or MRU size larger than a 996-tone RU

Figure 38-15 (Transmitter block diagram for the UL transmission using UHR MU PPDU or DL non-MU-MIMO transmission of a Data field with LDPC encoding on an RU or MRU larger than a 996-tone RU) shows the transmitter blocks used to generate the Data field of a UL SU transmission using UHR MU PPDU or DL non-MU-MIMO transmission with LDPC encoding in an RU or MRU whose size is larger than a 996-tone RU.

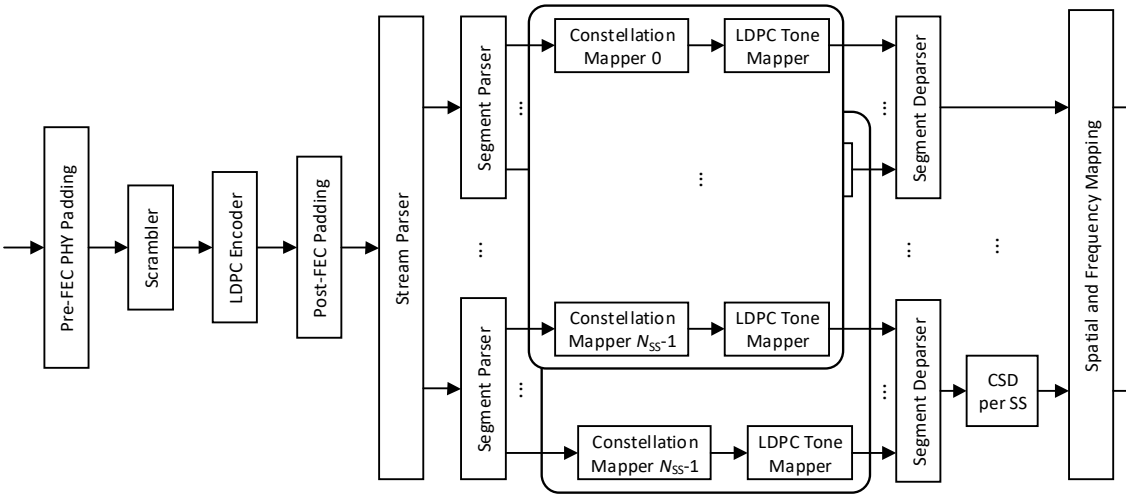

Figure 38-15—Transmitter block diagram for the UL transmission using UHR MU PPDU or DL non-MU-MIMO transmission of a Data field with LDPC encoding on an RU or MRU larger than a 996-tone RU

Copyright © 2025 IEEE. All rights reserved.
This is an unapproved IEEE Standards Draft, subject to change.

Figure 38-16 (Transmitter block diagram for the Data field of a UHR ELR PPDU transmission with BCC encoding) shows the transmit blocks used to generate the Data field of a UHR ELR PPDU with BCC encoding.

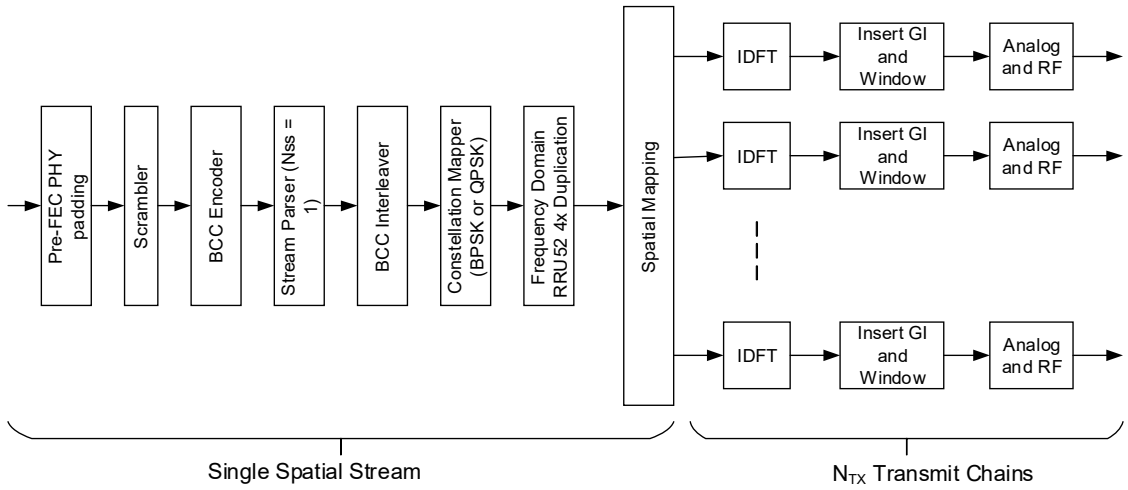

Figure 38-16—Transmitter block diagram for the Data field of a UHR ELR PPDU transmission with BCC encoding

Figure 38-17 (Transmitter block diagram for the Data field of a UHR ELR PPDU transmission with LDPC encoding) shows the transmit blocks used to generate the Data field of a UHR ELR PPDU with LDPC encoding.

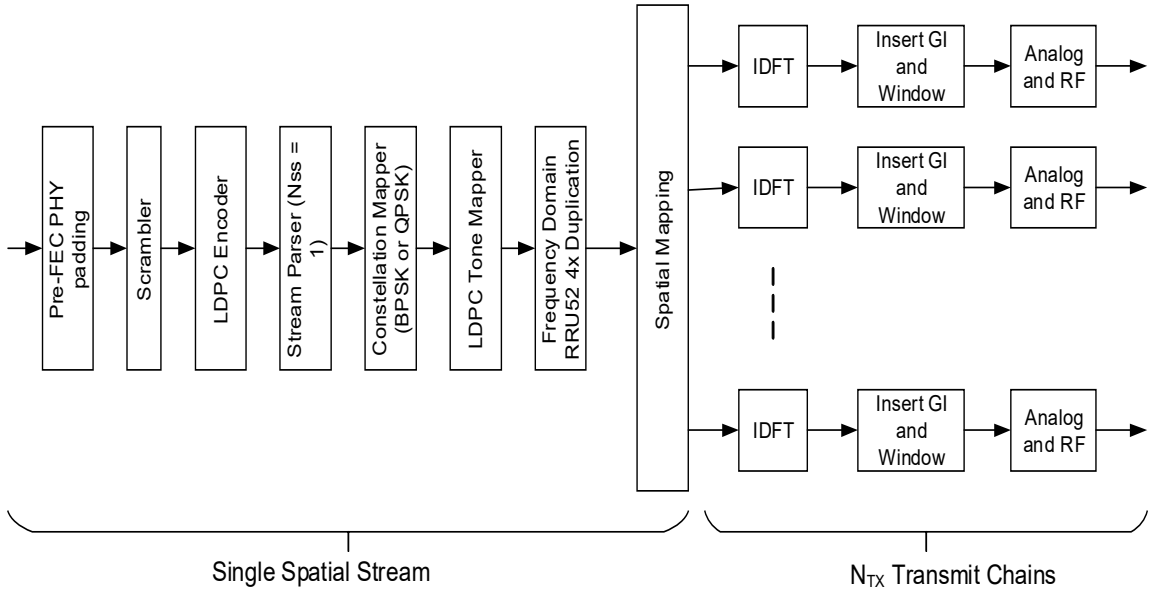

Figure 38-17—Transmitter block diagram for the Data field of a UHR ELR PPDU transmission with LDPC encoding

Copyright © 2025 IEEE. All rights reserved.
This is an unapproved IEEE Standards Draft, subject to change.

38.3.10 Overview of the PPDU encoding process

38.3.10.1 General

This subclause provides an overview of the UHR PPDU encoding process. A UHR ELR PPDU shall comply with transmit requirements as described in 38.3.20 (Transmit requirements for a UHR ELR PPDU). A UHR TB PPDU shall comply with the transmit requirements as described in 38.3.19 (Transmit requirements for PPDUs sent in response to a triggering frame).

38.3.10.2 Construction of L-STF

Construct the L-STF field as defined in 38.3.15.3 (L-STF) with the following highlights:

a) Determine the channel bandwidth from the TXVECTOR parameter CH_BANDWIDTH.

b) Sequence generation: Generate the L-STF sequence over the channel bandwidth as described in 38.3.15.3 (L-STF). Apply a 3 dB power boost if transmitting a UHR ELR PPDU as described in 38.3.15.3 (L-STF).

c) Phase rotation: Apply appropriate phase rotation for each occupied 20 MHz subchannel as described in 38.3.14 (Mathematical description of signals) and 38.3.14.4 (Transmitted signal).

d) IDFT: Compute the inverse discrete Fourier transform.

e) CSD per chain: Apply CSD per chain for each transmit chain as described in 38.3.15.2.1 (Cyclic shift for pre-UHR modulated fields).

f) Insert GI and apply windowing: Prepend a GI ($T_{GI,\text{Pre-UHR}}$) and apply windowing as described in 38.3.14 (Mathematical description of signals)

g) Analog and RF: Upconvert the resulting complex baseband waveform associated with each transmit chain to an RF signal according to the center frequency of the desired channel and transmit. Refer to 38.3.14 (Mathematical description of signals) and 38.3.15 (UHR preamble) for details.

38.3.10.3 Construction of L-LTF

Construct the L-LTF field as defined in 38.3.15.4 (L-LTF) with the following highlights:

a) Determine the channel bandwidth from the TXVECTOR parameter CH_BANDWIDTH.

b) Sequence generation: Generate the L-LTF sequence over the channel bandwidth as described in 38.3.15.4 (L-LTF). Apply a 3 dB power boost if transmitting a UHR ELR PPDU as described in 38.3.15.4 (L-LTF).

c) Phase rotation: Apply appropriate phase rotation for each occupied 20 MHz subchannel as described in 38.3.14 (Mathematical description of signals) and 38.3.14.4 (Transmitted signal).

d) IDFT: Compute the inverse discrete Fourier transform.

e) CSD per chain: Apply CSD per chain for each transmit chain as described in 38.3.15.2.1 (Cyclic shift for pre-UHR modulated fields).

f) Insert GI and apply windowing: Prepend a GI (($T_{GI,\text{L-LTF}}$)) and apply windowing as described in 38.3.14 (Mathematical description of signals).

Copyright © 2025 IEEE. All rights reserved.
This is an unapproved IEEE Standards Draft, subject to change.

g) Analog and RF: Upconvert the resulting complex baseband waveform associated with each transmit chain to an RF signal according to the carrier frequency of the desired channel and transmit. Refer to 38.3.14 (Mathematical description of signals) and 38.3.15 (UHR preamble) for details.

38.3.10.4 Construction of L-SIG

Construct the L-SIG field as defined in 38.3.15.5 (L-SIG) with the following highlights:

a) Set the RATE subfield in the L-SIG field to 6 Mb/s. Set the LENGTH, Parity, and Tail fields in the L-SIG field as described in 38.3.15.5 (L-SIG).
b) BCC encoder: Encode the L-SIG field by a convolutional encoder at the rate of $R = 1/2$ as described in 38.3.16.3.2 (BCC coding).
c) BCC interleaver: Interleave as described in 17.3.5.7 (Data interleavers).
d) Constellation Mapper: BPSK modulate as described in 36.3.13.7 (Constellation mapping).
e) Pilot insertion: Insert pilots as described in 38.3.15.5 (L-SIG).
f) Extra subcarrier insertion: Four extra subcarriers are inserted at $k \in \{-28, -27, 27, 28\}$ for channel estimation purpose and the values on these four extra subcarriers are $\{-1, -1, -1, 1\}$, respectively.
g) Duplication and phase rotation: Duplicate the L-SIG field over each occupied 20 MHz subchannel of the channel bandwidth. Apply appropriate phase rotation for each occupied 20 MHz subchannel as described in 38.3.14 (Mathematical description of signals) and 38.3.14.4 (Transmitted signal).
h) IDFT: Compute the inverse discrete Fourier transform.
i) CSD per chain: Apply CSD per chain for each transmit chain as described in 38.3.15.2.1 (Cyclic shift for pre-UHR modulated fields).
j) Insert GI and apply windowing: Prepend a GI ($T_{GI,\text{Pre-UHR}}$) and apply windowing as described in 38.3.14 (Mathematical description of signals).
k) Analog and RF: Upconvert the resulting complex baseband waveform associated with each transmit chain. Refer to 38.3.14 (Mathematical description of signals) and 38.3.15 (UHR preamble)for details.

38.3.10.5 Construction of RL-SIG

Construct the RL-SIG field as defined in 38.3.15.6 (RL-SIG) with the following highlights:

a) Set the RATE subfield in the RL-SIG field to 6 Mb/s. Set the LENGTH, Parity, and Tail fields in the RL-SIG field as described in 38.3.15.6 (RL-SIG).
b) BCC encoder: Encode the RL-SIG field by a convolutional encoder at the rate of $R = 1/2$ as described in 38.3.16.3.2 (BCC coding).
c) BCC interleaver: Interleave as described in 17.3.5.7 (Data interleavers).
d) Constellation Mapper: BPSK modulate as described in 36.3.13.7 (Constellation mapping).
e) Pilot insertion: Insert pilots as described in 38.3.15.6 (RL-SIG).
f) Extra subcarrier insertion: Four extra subcarriers are inserted at $k \in \{-28, -27, 27, 28\}$ for channel estimation purpose and the values on these four extra subcarriers are $\{-1, -1, -1, 1\}$, respectively.
g) Duplication and phase rotation: Duplicate the RL-SIG field over each occupied 20 MHz subchannel of the channel bandwidth. Apply appropriate phase rotation for each occupied 20 MHz subchannel as described in 38.3.14 (Mathematical description of signals) and 38.3.14.4 (Transmitted signal).
h) IDFT: Compute the inverse discrete Fourier transform.

Copyright © 2025 IEEE. All rights reserved.
This is an unapproved IEEE Standards Draft, subject to change.

i) CSD per chain: Apply CSD per chain for each transmit chain as described in 38.3.15.2.1 (Cyclic shift for pre-UHR modulated fields).

j) Insert GI and apply windowing: Prepend a GI ($T_{GI,\text{Pre-UHR}}$) and apply windowing as described in 38.3.14 (Mathematical description of signals).

k) Analog and RF: Upconvert the resulting complex baseband waveform associated with each transmit chain. Refer to 38.3.14 (Mathematical description of signals) and 38.3.15 (UHR preamble)for details.

38.3.10.6 Construction of U-SIG

Construct the U-SIG field as defined in 38.3.15.7 (U-SIG) with the following highlights:

Steps a) to f) apply for each frequency subblock:

a) Obtain the U-SIG field values from the TXVECTOR. Set the values of the Disregard and Validate fields as defined in Table 38-23 (U-SIG field of a UHR MU PPDU) in case of UHR MU PPDU. Append the calculated CRC and then append the N_{tail} tail bits as described in 38.3.15.7 (U-SIG). This results in 52 uncoded bits.

NOTE 1—The values of the Disregard and Validate fields in a UHR TB PPDU is specified in the TXVECTOR.

b) BCC encoder: Encode the data by a convolutional encoder at the rate of $R = 1/2$ as described in 17.3.5.6 (Convolutional encoder).

c) BCC interleaver: Interleave as described in 27.3.12.8 (BCC interleavers) for HE-SIG-A/HE-SIG-B.

d) Constellation mapper: BPSK modulate the first 52 interleaved bits as described in 17.3.5.8 (Subcarrier modulation mapping) to form the first OFDM symbol of U-SIG field. BPSK modulate the second 52 interleaved bits to form the second OFDM symbol of U-SIG field.

e) Pilot insertion: Insert pilots as described in 38.3.15.7.3 (Encoding and modulation).

f) Duplicate: Duplicate the U-SIG OFDM symbols over each occupied 20 MHz subchannel of the frequency subblock.

NOTE 2—20, 40, and 80 MHz UHR PPDUs have one 20, 40, and 80 MHz frequency subblock, respectively. 160 and 320 MHz UHR PPDUs have two and four 80 MHz frequency subblocks, respectively.

NOTE 3—U-SIG field content might vary between 80 MHz frequency subblocks in a 160 or 320 MHz UHR MU PPDU with the PPDU Type And Compression Mode field equal to 0 and the UL/DL field equal to 0 in the U-SIG field (DL OFDMA). For all other cases, U-SIG field content is the same for all frequency subblocks. See 38.3.15.7 (U-SIG).

g) Phase rotation: Apply the appropriate phase rotation for each occupied 20 MHz subchannel as described in 38.3.14 (Mathematical description of signals) and 38.3.14.4 (Transmitted signal).

h) IDFT: Compute the inverse discrete Fourier transform.

i) CSD per chain: Apply CSD per chain for each transmit chain as described in 38.3.15.2.1 (Cyclic shift for pre-UHR modulated fields).

j) Insert GI and apply windowing: Prepend a GI ($T_{GI,\text{Pre-UHR}}$) and apply windowing as described in 38.3.14 (Mathematical description of signals).

k) Analog and RF: Upconvert the resulting complex baseband waveform associated with each transmit chain to an RF signal according to the center frequency of the desired channel and transmit. Refer to 38.3.14 (Mathematical description of signals) and 38.3.15 (UHR preamble) for details.

Copyright © 2025 IEEE. All rights reserved.
This is an unapproved IEEE Standards Draft, subject to change.

38.3.10.7 Construction of UHR ELR-MARK

The ELR-MARK field consists of two OFDM symbols. Construct the ELR-MARK field as defined in 38.3.15.8 (ELR-MARK field(#9776)) with the following highlights:

a) Determine the BSS color from the TXVECTOR parameter BSS_COLOR.

b) Sequence generation: Generate the ELR-MARK sequence corresponding to the chosen BSS color as described in 38.3.15.8 (ELR-MARK field(#9776)). Assign the first 48 elements of the sequence to the first OFDM symbol of the ELR-MARK field, and the remaining 48 elements of the sequence to the second OFDM symbol of the ELR-MARK field.

Steps below apply for each OFDM symbol of the ELR-MARK field:

c) Constellation mapper: QBPSK modulate the 48 elements and map them onto the 48 data tones of the OFDM symbol as described in 38.3.15.8 (ELR-MARK field(#9776)).

d) Pilot insertion: Insert pilots as described in 38.3.15.8 (ELR-MARK field(#9776)).

e) IDFT: Compute the inverse discrete Fourier transform.

f) CSD per chain: Apply CSD per chain for each transmit chain as described in 38.3.15.2.1 (Cyclic shift for pre-UHR modulated fields).

g) Insert GI and apply windowing: Prepend a GI ($T_{GI,\,\text{Pre-UHR}}$) and apply windowing as described in 38.3.14 (Mathematical description of signals).

h) Analog and RF: Upconvert the resulting complex baseband waveform associated with each transmit chain to an RF signal according to the carrier frequency of the desired channel and transmit. Refer to 38.3.14 (Mathematical description of signals) and 38.3.15 (UHR preamble) for details.

38.3.10.8 Construction of UHR-SIG

For a UHR MU PPDU, construct the UHR-SIG field as defined in 38.3.15.9 (UHR-SIG) with the following highlights:

a) Obtain the UHR-SIG subfield values from the TXVECTOR. Add the Disregard fields. For each encoding block, append the calculated CRC and then append the tail bits as shown in 38.3.15.9 (UHR-SIG). Append padding bits if needed.

b) BCC encoder: Encode each code block by a convolutional encoder as described in 27.3.12.5.1 (BCC coding and puncturing).

c) BCC interleaver: Interleave as described in 27.3.12.8 (BCC interleavers) for HE-SIG-A/HE-SIG-B.

d) Constellation mapper: Obtain MCS_UHR_SIG from the TXVECTOR and use it to modulate the interleaved bits as described in 36.3.13.7 (Constellation mapping) to form the UHR-SIG OFDM symbols.

e) Pilot insertion: Insert pilots as described in 38.3.15.9.6 (Encoding and modulation).

f) Duplicate and phase rotation: Duplicate UHR-SIG OFDM symbols as described in 38.3.15.9.6 (Encoding and modulation). Apply the appropriate phase rotation for each occupied 20 MHz subchannel as described in 38.3.14 (Mathematical description of signals) and 38.3.14.4 (Transmitted signal).

Copyright © 2025 IEEE. All rights reserved.
This is an unapproved IEEE Standards Draft, subject to change.

g) IDFT: Compute the inverse Fourier transform.

h) CSD per chain: Apply CSD per chain for each transmit chain as described in 38.3.15.2.1 (Cyclic shift for pre-UHR modulated fields).

i) Insert GI and apply windowing: Prepend a GI ($T_{GI,\text{Pre-UHR}}$) and apply windowing as described in 38.3.14 (Mathematical description of signals).

j) Analog and RF: Upconvert the resulting complex baseband waveform associated with each transmit chain to an RF signal according to the center frequency of the desired channel and transmit. Refer to 38.3.14 (Mathematical description of signals) and 38.3.15 (UHR preamble) for details.

38.3.10.9 Construction of UHR-STF

Construct the UHR-STF field as defined in 38.3.15.10 (UHR-STF) with the following highlights:

a) Sequence generation: Generate the UHR-STF in the frequency domain over the bandwidth indicated by the TXVECTOR parameter CH_BANDWIDTH as described in 38.3.15.10 (UHR-STF). Apply a 3 dB power boost if transmitting a UHR ELR PPDU as described in 38.3.15.10.5 (UHR-STF for ELR PPDU).

b) CSD: Apply CSD for each spatial stream as described in 38.3.15.2.2 (Cyclic shift for UHR modulated fields).

c) Spatial mapping: Apply the Q matrix as described in 38.3.15.10 (UHR-STF).

d) IDFT: Compute the inverse discrete Fourier transform.

e) Insert GI and apply windowing: Prepend a GI of 0.8 µs for UHR MU PPDU and UHR ELR PPDU, and 1.6 µs for UHR TB PPDU, respectively. Apply windowing as described in 38.3.14 (Mathematical description of signals).

f) Analog and RF: Upconvert the resulting complex baseband waveform associated with each transmit chain to an RF signal according to the center frequency of the desired channel and transmit. Refer to 38.3.14 (Mathematical description of signals) and 38.3.15 (UHR preamble) for details.

38.3.10.10 Construction of UHR-LTF

Construct the UHR-LTF field as defined in 38.3.15.11 (UHR-LTF) with the following highlights:

a) Sequence generation: Generate the UHR-LTF sequence in frequency domain over the bandwidth indicated by CH_BANDWIDTH as described in 38.3.15.11 (UHR-LTF). For a UHR ELR PPDU, 2x UHR-LTF is used. Apply a 3 dB power boost if transmitting a UHR ELR PPDU as described in 38.3.15.11 (UHR-LTF).

b) $A_{\text{UHR-LTF}}$ matrix mapping: Apply the $P_{\text{UHR-LTF}}$ matrix to the data tones of the UHR-LTF sequence and apply the $R_{\text{UHR-LTF}}$ matrix to pilot subcarriers of the UHR-LTF sequence except for a UL MU-MIMO transmission using 1× UHR-LTF as described in 38.3.15.11 (UHR-LTF).

c) CSD: Apply CSD for each spatial stream as described in 38.3.15.2.2 (Cyclic shift for UHR modulated fields).

d) Spatial mapping: Apply the Q matrix as described in 38.3.15.11 (UHR-LTF).

e) IDFT: Compute the inverse discrete Fourier transform.

f) Insert GI and apply windowing: Prepend a GI indicated by the TXVECTOR parameter GI_TYPE and apply windowing as described in 38.3.14 (Mathematical description of signals).

Copyright © 2025 IEEE. All rights reserved.
This is an unapproved IEEE Standards Draft, subject to change.

g) Analog and RF: Upconvert the resulting complex baseband waveform associated with each transmit chain to an RF signal according to the center frequency of the desired channel and transmit. Refer to 38.3.14 (Mathematical description of signals) and 38.3.15 (UHR preamble) for details.

38.3.10.11 Construction of ELR-SIG

The ELR-SIG field consists of two subfields, ELR-SIG-1 and ELR-SIG-2, as defined in 38.3.15.12 (ELR-SIG). Construct the ELR-SIG field as defined in 38.3.15.12 (ELR-SIG) with the following highlights:

a) Obtain the ELR-SIG field values from the TXVECTOR.

Steps below apply to each subfield of the ELR-SIG field:

b) Append the calculated 4 CRC bits and then append the 6 tail bits as described in 38.3.15.12 (ELR-SIG). This results in 24 uncoded bits.

c) BCC encoder: Encode the data by a convolutional encoder at the rate of $R = 1/2$ as described in 17.3.5.6 (Convolutional encoder).

d) BCC interleaver: Interleave as described in 27.3.12.8 (BCC interleavers) for 52-tone RRU.

e) Constellation mapper: BPSK modulate the 48 interleaved bits and map them onto the 52-tone RRU 1 of a UHR ELR PPDU as described in 38.3.15.12 (ELR-SIG).

f) Pilot insertion: Insert pilots as described in 38.3.16.10 (Pilot subcarriers) for UHR ELR PPDU.

g) Frequency domain duplication: For a UHR ELR PPDU, steps d)-f) are done for each of the four 52-tone RRUs in a 20 MHz bandwidth (modulating the same data on each one) as described in 38.3.15.12 (ELR-SIG). Apply PAPR reduction mask on data tones, as described in 38.3.16.9 (Frequency domain duplication).

h) Spatial mapping: Apply the Q matrix as described in 38.3.16.11 (OFDM modulation).

i) IDFT: Compute the inverse discrete Fourier transform.

j) Insert GI and apply windowing: Prepend a GI of 1.6 µs and apply windowing as described in 38.3.14 (Mathematical description of signals).

k) Analog and RF: Upconvert the resulting complex baseband waveform associated with each transmit chain to an RF signal according to the center frequency of the desired channel and transmit. Refer to 38.3.14 (Mathematical description of signals) and 38.3.15 (UHR preamble) for details.

38.3.10.12 Construction of Data field in a UHR PPDU

38.3.10.12.1 non-ELR PPDU(#7570)

Construct the Data field as defined in 38.3.16 (Data field) with the following highlights:

For each user,

a) Construct the SERVICE field in the same way as in an EHT PPDU as described in 36.3.13.1 (SERVICE field) and append the PSDU to the SERVICE field.

b) Pre-FEC padding: Append the pre-FEC padding bits as described in 38.3.16 (Data field). If the user is using BCC, then add tail bits.

c) Scrambler: Scramble the pre-FEC padded data in the same way as in an EHT PPDU as described in 36.3.12.2 (EHT PHY DATA scrambler and descrambler).

Copyright © 2025 IEEE. All rights reserved.
This is an unapproved IEEE Standards Draft, subject to change.

d) Encoder: If the user is using BCC, then BCC encode and, if UHR-MCS 15 is used in a 106-tone RU, 242-tone RU, or 106+26-tone MRU, insert a padding bit after every $2 \times N_{DBPS,u}$ coded bits as described in 38.3.16.3.2 (BCC coding). If the user is using LDPC, then LDPC encode as described in 38.3.16.3.3 (LDPC coding).

e) Post-FEC padding: Append the post-FEC padded bits as described in 38.3.16 (Data field) and the PE field as described in 38.3.17 (Packet extension).

f) Stream parser: Rearrange the output of encoder into blocks as described in 38.3.16.4 (Stream parser).

g) Segment parser: In a 2×996-tone RU, 4×996-tone RU, 996+484-tone MRU, 996+484+242-tone MRU, 2×996+484-tone MRU, 3×996-tone MRU, or 3×996+484-tone MRU using UHR-MCS 0 to 13,15, 17, 19, 20 or 23, divide each spatial stream output from the stream parser into multiple frequency subblocks as described in 38.3.16.5 (Segment parser). This block is bypassed for RU(s) or MRU(s) of other sizes when using UHR-MCS 0 to 13, 15, 17, 19, 20, or 23

h) BCC interleaver: If the user is using BCC, interleave as described in 38.3.16.6 (BCC interleavers). This block is bypassed if the user is using LDPC.

i) Constellation mapper: Map to BPSK, BPSK-DCM, QPSK, 16-QAM, 64-QAM, 256-QAM, 1024-QAM, or 4096-QAM constellation points as described in 36.3.13.7 (Constellation mapping).

j) LDPC tone mapper: If the user is using LDPC, the LDPC tone mapping is performed on all LDPC encoded streams as described in 38.3.16.7 (LDPC tone mapper). This block is bypassed if the user is using BCC.

k) Segment deparser: In a 2×996-tone RU, 4×996-tone RU, 996+484-tone MRU, 996+484+242-tone MRU, 2×996+484-tone MRU, 3×996-tone MRU, or 3×996+484-tone MRU using UHR-MCS 0 to 13 or 15, merge the multiple 80 MHz frequency subblocks into one frequency segment as described in 38.3.16.8 (Segment deparser). This block is bypassed for RU(s) or MRU(s) of other sizes when using UHR-MCS 0 to 13 or 15.

l) Pilot insertion: Insert pilots following the steps described in 38.3.16.10 (Pilot subcarriers).

m) CSD: Apply CSD for each spatial stream as described in 38.3.15.2.2 (Cyclic shift for UHR modulated fields).

After steps a) to n) performed for all users in the PPDU,

n) Spatial mapping: Apply the Q matrix as described in 38.3.16.11 (OFDM modulation). Signal from all users in each RU is combined in this block.

o) IDFT: Compute the inverse discrete Fourier transform.

p) Insert GI and apply windowing: Prepend a GI determined by the TXVECTOR parameter GI_TYPE and apply windowing as described in 38.3.14 (Mathematical description of signals).

q) Analog and RF: Upconvert the resulting complex baseband waveform with each transmit chain to an RF signal according to the center frequency of the desired channel and transmit. Refer to 38.3.14 (Mathematical description of signals) for details.

38.3.10.12.2 ELR PPDU

Construct the UHR ELR-Data field as defined in 38.3.16 (Data field) with the following highlights:

a) Construct the SERVICE field in the same way as in an EHT PPDU as described in 36.3.13.1 (SERVICE field) and append the PSDU to the SERVICE field.

b) Pre-FEC padding: Append the pre-FEC padding bits as described in 38.3.16 (Data field). If the user is using BCC, then add tail bits.

c) Scrambler: Scramble the pre-FEC padded data in the same way as in an EHT PPDU as described in 36.3.13.2 (EHT PHY DATA scrambler and descrambler).

Copyright © 2025 IEEE. All rights reserved.
This is an unapproved IEEE Standards Draft, subject to change.

d) Encoder: If the user is using BCC, then BCC encode as described in 38.3.16.3.2 (BCC coding). If the user is using LDPC, then LDPC encode as described in 38.3.16.3.3 (LDPC coding).

e) BCC interleaver: If the user is using BCC, interleave as described in 38.3.16.6 (BCC interleavers). This block is bypassed if the user is using LDPC.

f) Constellation mapper: Map to BPSK or QPSK constellation points as described in 36.3.13.7 (Constellation mapping)

g) LDPC tone mapper: If the user is using LDPC, the LDPC tone mapping is performed on LDPC encoded stream as described in 38.3.16.7 (LDPC tone mapper). This block is bypassed if the user is using BCC.

h) Frequency domain duplication: For a UHR ELR PPDU, steps e) to g) are done for the 52-tone RRU 1, and then the 52-tone RRU 1 is duplicated to the 52-tone RRU 2, 52-tone RU 3 and 52-tone RRU 4 as described in 38.3.16.9 (Frequency domain duplication). Apply PAPR reduction mask on data tones, as described in 38.3.16.9 (Frequency domain duplication).

i) Pilot insertion: Insert pilots as described in 38.3.16.10 (Pilot subcarriers) for UHR ELR PPDU.

j) CSD: Apply CSD for each spatial stream as described in 38.3.15.2.2 (Cyclic shift for UHR modulated fields).

k) Spatial mapping: Apply the Q matrix as described in 38.3.16.11 (OFDM modulation).

l) IDFT: Compute the inverse discrete Fourier transform.

m) Insert GI and apply windowing: Prepend a GI of 1.6 µs and apply windowing as described in 38.3.14 (Mathematical description of signals).

n) Analog and RF: Upconvert the resulting complex baseband waveform with each transmit chain to an RF signal according to the center frequency of the desired channel and transmit. Refer to 38.3.14 (Mathematical description of signals) for details.

38.3.11 UHR modulation and coding schemes (UHR-MCSs) and Unequal modulation (UEQM)

UHR-MCS is a compact representation of the modulation and coding combinations. Rate dependent parameters for the full set of the UHR-MCSs are shown in 38.5 (Parameters for UHR-MCSs).

UHR-MCS 0–13, and(#9062) 15 are the same as EHT-MCS 0–13, and(#9062) 15, respectively. MCS 17, 19, 20 and 23 are (#7331, 9733)new MCSs defined with combinations of existing FEC coding rate and modulation order. MCS 0–13, 17, 19, 20 and 23 may be used for single spatial stream transmissions, as well as multiple spatial stream transmissions with equal modulation (EQM). MCS 1–13, 17, 19, 20 and 23 may be used for UEQM in multiple spatial stream transmissions. MCS 15 is only used for single spatial stream transmissions(#5096, 7243, 9063, 11600).

UHR defines (#11600)EQM for 1 to 8 spatial streams, and UEQM for 2 to 4 spatial streams.

For EQM, the uncoded bits (#8134)for the same user transmitted over all spatial streams in the Data field of the PPDU are jointly coded, and the coded bits parsed to each spatial stream are modulated with the same modulation order. In the case of EQM, UHR-MCS is a value that indicates the modulation and coding scheme for all spatial streams.

For UEQM, the uncoded bits (#8135)for the same user transmitted over all spatial streams in the Data field of the PPDU are jointly coded, and the coded bits parsed to at least one of the spatial streams are modulated with a different modulation level from that of the first spatial stream. In the case of UEQM, UHR-MCS is a value that indicates the modulation order for the first spatial stream and the coding rate for all spatial streams(#7332) in the Data field of the PPDU. The modulation orders of the subsequent spatial streams are indicated by the UEQM Pattern subfield in the (#9734)User field of UHR-SIG in Table 38-33 (UEQM pattern subfield encoding) in 38.3.15.9.5 (User Specific field). The allowed MCSs of the first spatial stream

Copyright © 2025 IEEE. All rights reserved.
This is an unapproved IEEE Standards Draft, subject to change.

are indicated in the MCS subfield of Table 38-32 (User field format for a non-MU-MIMO allocation or Co-SR allocation).

UEQM is used only in a UHR MU PPDU for beamformed UHR SU transmission, or beamformed transmission on RU(s) or MRU(s) with non-MU-MIMO allocation(#11601). UEQM is used only with LDPC. The combination of FEC coding rate and modulation order used in any spatial streams in UEQM transmission shall be a defined UHR-MCS listed in Table 38-61 (UHR-MCSs for 26-tone RU, NSS,u = 1) to Table 38-81 (UHR-MCSs for 4×996-tone RU, NSS,u = 1, when IM is enabled)(#8782). The allowed modulations(#8136) used in UEQM are QPSK, 16-QAM, 64-QAM, 256-QAM, 1024-QAM and 4096-QAM.

For a UHR MU PPDU, both the UHR-MCS and UEQM(#8137) pattern across spatial streams are carried per user in the(#4035, 4397, 4760, 5136, 5339, 5801, 10302, 9064, 9735, 11602, 8138) (#Ed)User field for a non-MU-MIMO RU allocation in the User Specific field of the UHR-SIG field, and the(#5802, 9736) User field for an MU-MIMO RU allocation carries only the UHR-MCS per user in the User Specific field of the UHR-SIG field. For a UHR TB PPDU, the UHR-MCS is carried in the User Info field of the Trigger frame soliciting the UHR TB PPDU. For a UHR ELR PPDU, the UHR-MCS is carried in the ELR-SIG field.

The UHR ELR PPDU supports UHR-MCS 0 and UHR-MCS 1(#5340, 8783, 7333), 6664, 9065, 9737). The rate-dependent parameters for UHR-MCS 0 and UHR-MCS 1 for UHR ELR PPDU are defined in Table 38-82 (UHR ELR PPDU with UHR-MCS0 and UHR-MCS1, NSS = 1).

38.3.12 UHR-SIG modulation and coding schemes (UHR-SIG-MCSs)

The UHR-SIG-MCS is a compact representation of the modulation and coding used in the UHR-SIG field of the UHR MU PPDU. The UHR-SIG modulation and coding scheme is carried in the UHR-SIG MCS field of the U-SIG field in the UHR MU PPDU and supports UHR-MCS 0, UHR-MCS 1 and UHR-MCS 3.

38.3.13 Timing-related parameters

Table 38-18 (Timing-related constants) defines the timing-related parameters for UHR PPDU format.

Table 38-18—Timing-related constants

Parameter	Value	Description
$\Delta_{F,\text{ Pre-UHR}}$	312.5 kHz	Subcarrier frequency spacing for the pre-UHR modulated fields
$\Delta_{F,\text{ UHR}}$	78.125 kHz	Subcarrier frequency spacing for the UHR modulated fields
$T_{DFT,\text{ Pre-UHR}}$	3.2 µs	IDFT/DFT period for the pre-UHR modulated fields
$T_{DFT,\text{ UHR}}$	12.8 µs	IDFT/DFT period for the UHR modulated fields
$T_{DFT,\text{ UHR-LTF,ELR}}$	6.4 µs	IDFT/DFT period for the UHR-LTF,ELR field
$T_{GI,\text{ Pre-UHR}}$	0.8 µs	Guard interval duration for the pre-UHR modulated fields excluding the L-LTF field
$T_{GI,\text{ L-LTF}}$	1.6 µs	Guard interval duration for the L-LTF field

Copyright © 2025 IEEE. All rights reserved.
This is an unapproved IEEE Standards Draft, subject to change.

Table 38-18—Timing-related constants *(continued)*

Parameter	Value	Description
$T_{GI,\text{ ELR-MARK}}$	0.8 µs	Guard interval duration for the ELR-MARK field
$T_{GI1,\text{ Data}}$	0.8 µs	Base guard interval duration for the Data field
$T_{GI2,\text{ Data}}$	1.6 µs	Double guard interval duration for the Data field
$T_{GI4,\text{ Data}}$	3.2 µs	Quadruple guard interval duration for the Data field
$T_{GI,\text{ Data}}$	$T_{GI1,\text{ Data}}$, $T_{GI2,\text{ Data}}$ or $T_{GI4,\text{ Data}}$ depending on the GI used for the Data field	Guard interval duration for the Data field in UHR MU PPDUs and UHR TB PPDUs
$T_{GI,\text{ UHR-LTF}}$	$T_{GI,\text{ Data}}$	Guard interval duration for the UHR-LTF field, same as $T_{GI,\text{ Data}}$
$T_{GI,\text{ UHR-LTF,ELR}}$	1.6 µs	Guard interval duration for the UHR-LTF field in UHR ELR PPDU
$T_{GI,\text{ ELR-SIG}}$	1.6 µs	Guard interval duration for the ELR-SIG field
$T_{GI,\text{ Data,ELR}}$	1.6 µs	Guard interval duration for the Data field in UHR ELR PPDU
$T_{SYM,\text{ ELR-MARK}}$	4 µs = $T_{DFT,\text{ Pre-UHR}}$ + $T_{GI,\text{ ELR-MARK}}$	OFDM symbol duration for ELR-MARK field
$T_{SYM,\text{ UHR-LTF,ELR}}$	8 µs = $T_{DFT,\text{ UHR-LTF,ELR}}$ + $T_{GI,\text{ UHR-LTF,ELR}}$	OFDM symbol duration for UHR-LTF field including GI in UHR ELR PPDU
$T_{SYM,\text{ ELR-SIG}}$	14.4 µs = $T_{DFT,\text{UHR}}$ + $T_{GI,\text{ ELR-SIG}}$ = 1.125 × $T_{DFT,\text{ UHR}}$	OFDM symbol duration for ELR-SIG field including GI
$T_{SYM,\text{ Data,ELR}}$	14.4 µs = $T_{DFT,\text{UHR}}$ + $T_{GI,\text{ Data,ELR}}$ = 1.125 × $T_{DFT,\text{ UHR}}$	OFDM symbol duration for ELR-Data field including GI in UHR ELR PPDU
T_{SYM1}	13.6 µs = $T_{DFT,\text{ EHT}}$ + $T_{GI1,\text{ Data}}$ = 1.0625 × $T_{DFT,\text{ EHT}}$	OFDM symbol duration with base GI
T_{SYM2}	14.4 µs = $T_{DFT,\text{ EHT}}$ + $T_{GI2,\text{ Data}}$ = 1.125 × $T_{DFT,\text{ EHT}}$	OFDM symbol duration with double GI
T_{SYM4}	16 µs = $T_{DFT,\text{ EHT}}$ + $T_{GI4,\text{ Data}}$ = 1.25 × $T_{DFT,\text{ EHT}}$	OFDM symbol duration with quadruple GI
T_{SYM}	T_{SYM1} , T_{SYM2} or T_{SYM4} depending on the GI used for UHR Data fields	OFDM symbol interval for UHR Data fields in UHR MU PPDUs and UHR TB PPDUs.
$T_{\text{L-STF}}$	8 µs = 10 × $T_{DFT,\text{ Pre-UHR}}$ / 4	Non-HT Short Training field duration
$T_{\text{L-LTF}}$	8 µs = 2 × $T_{DFT,\text{ Pre-UHR}}$ + $T_{GI,\text{ L-LTF}}$	Non-HT Long Training field duration

Copyright © 2025 IEEE. All rights reserved.
This is an unapproved IEEE Standards Draft, subject to change.

Table 38-18—Timing-related constants *(continued)*

Parameter	Value	Description
$T_{\text{L-SIG}}$	4 µs	Non-HT SIGNAL field duration
$T_{\text{RL-SIG}}$	4 µs	Repeated non-HT SIGNAL field duration
$T_{\text{U-SIG}}$	8 µs = 2 × 4 µs	U-SIG field duration in a UHR PPDU
$T_{\text{UHR-SIG}}$	4 µs = $T_{DFT,\text{ Pre-UHR}} + T_{GI,\text{ Pre-UHR}}$	Duration of each OFDM symbol in the UHR-SIG field
$T_{\text{ELR-MARK}}$	8 µs = 2 × $T_{SYM,\text{ ELR-MARK}}$	ELR-MARK field duration
$T_{\text{UHR-STF-T}}$	8 µs = 5 × 1.6 µs	UHR-STF field duration for a UHR TB PPDU
$T_{\text{UHR-STF-NT}}$	4 µs = 5 × 0.8 µs	UHR-STF field duration for a UHR MU PPDU and a UHR ELR PPDU
$T_{\text{UHR-LTF-1X}}$	3.2 µs	Duration of each 1× UHR-LTF OFDM symbol without GI
$T_{\text{UHR-LTF-2X}}$	6.4 µs	Duration of each 2× UHR-LTF OFDM symbol without GI
$T_{\text{UHR-LTF-4X}}$	12.8 µs	Duration of each 4× UHR-LTF OFDM symbol without GI
$T_{\text{UHR-LTF}}$	$T_{\text{UHR-LTF-1X}}$, $T_{\text{UHR-LTF-2X}}$ or $T_{\text{UHR-LTF-4X}}$ depending upon the UHR-LTF duration used	Duration of each OFDM symbol without GI in the UHR-LTF field
$T_{\text{UHR-LTF-SYM}}$	$T_{\text{UHR-LTF}} + T_{GI,\text{ UHR-LTF}}$	Duration of each OFDM symbol including GI in the UHR-LTF field
$T_{\text{UHR-LTF, ELR}}$	16 µs = $T_{SYM,\text{ UHR-LTF,ELR}}$ × 2	ELR-LTF field duration in UHR ELR PPDU
$T_{\text{ELR-SIG}}$	28.8 µs= $T_{SYM,\text{ ELR-SIG}}$ × 2	ELR-SIG field duration
T_{SYML}	4 µs	OFDM symbol duration including GI in the pre-UHR modulated fields
T_{PE}	0, 4 µs, 8 µs, 12 µs, 16 µs or 20 µs depending on the actual packet extension duration used	Duration of the PE field

Table 38-19 (Subcarrier allocation related constants for the UHR ELR PPDU) defines subcarrier allocation related parameters for UHR ELR PPDU. Subcarrier allocation related parameters for the UHR modulated fields in a nonpunctured non-OFDMA UHR PPDU that is not a UHR ELR PPDU or when IM is not enabled is the same as those for EHT modulated fields in a nonpunctured non-OFDMA EHT PPDU, see Table 36-19

Copyright © 2025 IEEE. All rights reserved.
This is an unapproved IEEE Standards Draft, subject to change.

(Subcarrier allocation related constants for the EHT-modulated fields in a nonpunctured non-OFDMA EHT PPDU).

Table 38-19—Subcarrier allocation related constants for the UHR ELR PPDU

Parameter	ELR PPDU	Description
$N_{SD,total}$	192	Total number of data subcarriers
N_{SP}	16	Number of pilot subcarriers
N_{ST}	208	Total number of subcarriers
N_{SR}	121	Highest data subcarrier index
N_{DC}	33	Number of null subcarriers at DC
$N_{Guard,Left}$	6	Number of low frequency guard subcarriers
$N_{Guard,Right}$	5	Number of high frequency guard subcarriers

Subcarrier allocation related parameters for the UHR modulated fields in a nonpunctured non-OFDMA UHR PPDU when IM is enabled are given in Table 38-20 (Subcarrier allocation related constants for the UHR-modulated fields in a nonpunctured non-OFDMA UHR PPDU, when IM is enabled).

Table 38-20—Subcarrier allocation related constants for the UHR-modulated fields in a non-punctured non-OFDMA UHR PPDU, when IM is enabled

Parameter	CBW20	CBW40	CBW80	CBW160	CBW320	Description
$N_{SD,total}$	208	416	882	1764	3528	Total number of data subcarriers
$N_{SP,IM}$	26	52	98	196	392	Number of IM pilots
N_{TM}	234	468	980	980	980	LDPC Tone Mapper block size
N_{SP}	8	16	16	32	64	Number of pilot subcarriers
N_{ST}	242	484	996	1992	3984	Total number of subcarriers
N_{SR}	122	244	500	1012	2036	Highest data subcarrier index
N_{DC}	3	5	5	23	23	Number of null subcarriers at DC
$N_{Guard,Left}$	6	12	12	12	12	Number of low frequency guard subcarriers
$N_{Guard,Right}$	5	11	11	11	11	Number of high frequency guard subcarriers

Copyright © 2025 IEEE. All rights reserved.
This is an unapproved IEEE Standards Draft, subject to change.

Table 38-21 (Frequently used parameters) defines parameters used frequently in Clause 38 (Ultra-high reliability (UHR) PHY specification).

Table 38-21—Frequently used parameters

Symbol	Explanation
N_{RU}	For pre-UHR modulated fields, $N_{RU} = 1$. For UHR modulated fields, N_{RU} represents the number of occupied RU(s) or MRU(s) in the transmission.
$N_{user,r}$	For pre-UHR modulated fields, $N_{user,r} = 1$. For UHR modulated fields, $N_{user,r}$ represents the total number of users in the *r*-th occupied RU or MRU of the transmission.
$N_{user,total}$	Total number of users in all occupied RU(s) or MRU(s) of a UHR transmission, i.e., $N_{user,total} = \sum_{r=0}^{N_{RU}-1} N_{user,r}$
$N_{CBPS,u}$	Number of coded bits per OFDM symbol for user *u*, $u = 0, 1, \ldots, N_{user,total} - 1$. $N_{CBPS,u} = \sum_{m=1}^{N_{ss,u}} N_{CBPS,m,u}$, in which $N_{CBPS,m,u}$ *and* $N_{ss,u}$ are defined in Table 38-21 (Frequently used parameters).
$N_{CBPS,m,u}$	Number of coded bits per OFDM symbol over the *m*-th spatial stream for user *u*, $m = 1, 2, \ldots, N_{ss,r,u}$ in OFDMA transmission, $u = 0, 1, \ldots, N_{user,total} - 1$.
N_{SD}	Effective number of data tones carrying unique data. NOTE—The N_{SD} value with DCM (when applicable) is half of the N_{SD} value without DCM, for each RU or MRU size.
$N_{SD,u}$	Effective number of data tones carrying unique data for user *u*, $u = 0, 1, \ldots, N_{user,total} - 1$.
$N_{CBPSS,u}$	Number of coded bits per OFDM symbol per spatial stream, for EQM transmission, for user *u*, $u = 0, 1, \ldots, N_{user,total} - 1$.
$N_{CBPSS,l,u}$	Number of coded bits per OFDM symbol per spatial stream, for EQM transmission, for user *u* in the *l*-th 80 MHz frequency block, $u = 0, 1, \ldots, N_{user,total} - 1$ and $l = 0, 1, \ldots, L - 1$. *L* is the number of 80 MHz frequency subblocks.
N_{DBPS}	Number of data bits per OFDM symbol
$N_{DBPS,u}$	Number of data bits per OFDM symbol for user *u*, $u = 0, 1, \ldots, N_{user,total} - 1$. NOTE—For LDPC, $N_{DBPS,u}$ is derived from $N_{CBPS,u}$ using R_u, rather than the effective LDPC code rate, which may vary depending on shortening/puncturing/ repetition performed during LDPC encoding.
$N_{BPSCS,u}$	Number of coded bits per subcarrier per spatial stream, for EQM transmission, for user *u*, $u = 0, 1, \ldots, N_{user,total} - 1$.
$N_{BPSCS,m,u}$	Number of coded bits per subcarrier over the *m*-th spatial stream for user *u*, $m = 1, 2, \ldots, N_{ss,r,u}$ in OFDMA transmission, $u = 0, 1, \ldots, N_{user,total} - 1$.

Copyright © 2025 IEEE. All rights reserved.
This is an unapproved IEEE Standards Draft, subject to change.

Table 38-21—Frequently used parameters *(continued)*

Symbol	Explanation
$N_{BPSCS,l,u}$	Number of coded bits per subcarrier per spatial stream, for EQM transmission, for user u in the l-th 80 MHz frequency block, $u = 0, 1, \ldots, N_{user,total} - 1$ and $l = 0, 1, \ldots, L - 1$. L is the number of 80 MHz frequency subblocks.
N_{RX}	Number of receive chains.
$N_{SS,r,u}$, $N_{SS,u}$, N_{SS}	Number of spatial streams. For the Data field, $N_{SS,r,u}$ is the number of spatial streams at r-th RU or MRU for user u, $u = 0, 1, \ldots, N_{user,r} - 1$, and $N_{SS,u}$ is the number of spatial streams for user u, $u = 0, 1, \ldots, N_{user,total} - 1$. For the Data field of a UHR PPDU, $N_{SS} = max_{r=0}^{N_{RU}-1} N_{SS,r,total}$.
$N_{SS,r,total}$	For UHR modulated fields, $N_{SS,r,total}$ is the total number of spatial streams at r-th RU or MRU in a PPDU: $N_{SS,r,total} = \sum_{u=0}^{N_{user,r}-1} N_{SS,r,u}$. For pre-UHR modulated fields, $N_{SS,r,total}$ is undefined.
N_{TX}	Number of transmit chains.
$N_{\text{UHR-LTF}}$	The number of OFDM symbols in the UHR-LTF field (see 38.3.15.11 (UHR-LTF)).
$N_{\text{UHR-SIG}}$	The number of OFDM symbols in the UHR-SIG field (see 38.3.15.9 (UHR-SIG)).
K_r	Set of used subcarrier indices in the r-th occupied RU, MRU or DRU.
R_u	Coding rate for user u, $u = 0, 1, \ldots, N_{user,total} - 1$.
$M_{r,u}$	The sum of the number of spatial streams of users prior to user u in RU or MRU r. For pre-UHR modulated fields, $M_{r,u} = 0$. For UHR modulated fields, $M_{r,0} = 0$ for $u = 0$ and $M_{r,u} = \sum_{u'=0}^{u-1} N_{SS,r,u'}$, for $u = 1, 2, \ldots, N_{user,r} - 1$.

38.3.14 Mathematical description of signals

38.3.14.1 Notation

For a description of the conventions used for the mathematical description of the signals, see 17.3.2.5 (Mathematical conventions in the signal descriptions). In addition, the following notational conventions are used in Clause 38 (Ultra-high reliability (UHR) PHY specification):

— $[Q]_{m,n}$ indicates the element in row m and column n of the matrix Q, where $1 \le m \le N_{row}$ and $1 \le n \le N_{col}$, with N_{row} and N_{col} being the number of rows and columns, respectively, of the matrix Q.

— $[Q]_{m:n}$ indicates a matrix consisting of columns m to n of the matrix Q.

Copyright © 2025 IEEE. All rights reserved.
This is an unapproved IEEE Standards Draft, subject to change.

38.3.14.2 Subcarrier indices in use

For a description on subcarrier indices over which the signal is transmitted for non-HT, HT, and VHT PPDUs, see 21.3.7 (Mathematical description of signals). For a description on subcarrier indices over which the signal is transmitted for HE PPDUs, see 27.3.10 (Mathematical description of signals). For a description on subcarrier indices over which the signal is transmitted for EHT PPDUs, see 36.3.11 (Mathematical description of signals).

Subcarrier indices over which the signal is transmitted for UHR PPDUs are the same as those for EHT PPDUs (see 36.3.11 (Mathematical description of signals)).

38.3.14.3 Channel frequencies

Frequencies $f_{\text{CH, start}}$, $f_{c,\text{ idx0}}$, $f_{\text{P20, idx}}$, $f_{\text{P40, idx}}$, $f_{\text{P80, idx}}$, and $f_{\text{P160, idx}}$ are as described in 36.3.11.3 (Channel frequencies) except with dot11EHTCurrentChannelWidth and dot11EHTCurrentChannelCenterFrequencyIndex0 replaced with dot11UHRCurrentChannelWidth and dot11UHRCurrentChannelCenterFrequencyIndex0, respectively.

38.3.14.4 Transmitted signal

The transmitted signal is described in complex baseband signal notation. The actual transmitted signal on transmit chain i_{TX} is related to the complex baseband signal by the relation shown in Equation (38-2).

$$r_{RF}^{i_{TX}}(t) = Re\{r_{PPDU}^{i_{TX}}(t) \cdot \exp(j2\pi f_c t)\}, \quad i_{TX} = 1, \ldots N_{TX} \tag{38-2}$$

where

$r_{PPDU}^{i_{TX}}(t)$ represents the complex baseband signal of transmit chain i_{TX}.

f_c represents the center frequency of the transmitted PPDU. Table 36-25 (Center frequency of the transmitted PPDU) shows f_c as a function of the channel starting frequency, channel width and CH_BANDWIDTH, where dot11EHTCurrentChannelWidth is replaced with dot11UHRCurrentChannelWidth, and $f_{\text{CH, start}}$, $f_{c,\text{ idx0}}$, $f_{\text{P20, idx}}$, $f_{\text{P40, idx}}$, $f_{\text{P80, idx}}$, and $f_{\text{P160, idx}}$ are described in 38.3.14.3 (Channel frequencies)

The transmitted RF signal is derived by upconverting the complex baseband signal, which consists of several fields. The timing boundaries for the various fields are shown in Figure 38-18 (Timing boundaries for UHR MU PPDU and UHR TB PPDU fields) and Figure 38-19 (Timing boundaries for UHR ELR PPDU fields), where $N_{\text{UHR-LTF}}$ is the number of UHR-LTF symbols and is defined in Table 38-21 (Frequently used parameters), $N_{\text{UHR-SIG}}$ is the number of OFDM symbols in the UHR-SIG field present in a UHR MU PPDU, and N_{SYM} is the number of OFDM symbols in the Data field.

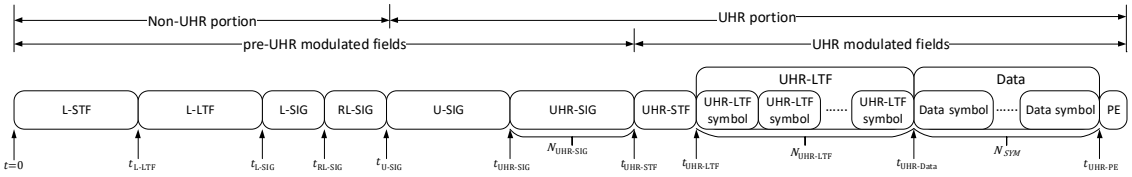

Figure 38-18—Timing boundaries for UHR MU PPDU and UHR TB PPDU fields

Copyright © 2025 IEEE. All rights reserved.
This is an unapproved IEEE Standards Draft, subject to change.

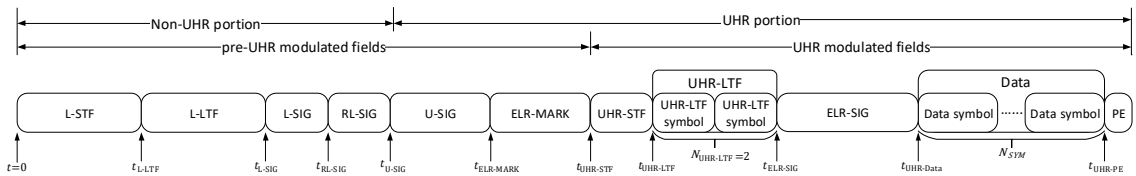

Figure 38-19—Timing boundaries for UHR ELR PPDU fields

The time offset, t_{Field}, determines the starting time of the corresponding field relative to the start of L-STF ($t = 0$).

The complex baseband signal transmitted on transmit chain i_{TX} shall be as shown in Equation (38-3).

$$
\begin{aligned}
r_{PPDU}^{i_{TX}}(t) &= r_{\text{L-STF}}^{i_{TX}}(t) + r_{\text{L-LTF}}^{i_{TX}}(t - t_{\text{L-LTF}}) + r_{\text{L-SIG}}^{i_{TX}}(t - t_{\text{L-SIG}}) + r_{\text{RL-SIG}}^{i_{TX}}(t - t_{\text{RL-SIG}}) \\
&+ r_{\text{U-SIG}}^{i_{TX}}(t - t_{\text{U-SIG}}) + \chi_{\text{UHR-SIG}} r_{\text{UHR-SIG}}^{i_{TX}}(t - t_{\text{UHR-SIG}}) + \chi_{\text{ELR-MARK}} r_{\text{ELR-MARK}}^{i_{TX}}(t - t_{\text{ELR-MARK}}) \\
&+ r_{\text{UHR-STF}}^{i_{TX}}(t - t_{\text{UHR-STF}}) + r_{\text{UHR-LTF}}^{i_{TX}}(t - t_{\text{UHR-LTF}}) + \chi_{\text{ELR-SIG}} r_{\text{ELR-SIG}}^{i_{TX}}(t - t_{\text{ELR-SIG}}) \\
&+ r_{\text{UHR-Data}}^{i_{TX}}(t - t_{\text{UHR-Data}}) + r_{\text{UHR-PE}}^{i_{TX}}(t - t_{\text{UHR-PE}})
\end{aligned}
\tag{38-3}
$$

where

$r_{\text{UHR-SIG}}^{i_{TX}}(t)$ is only applicable to a UHR MU PPDU.

$r_{\text{ELR-MARK}}^{i_{TX}}(t)$ is only applicable to a UHR ELR PPDU.

$r_{\text{ELR-SIG}}^{i_{TX}}(t)$ is only applicable to a UHR ELR PPDU.

$$\chi_{\text{UHR-SIG}} = \begin{cases} 1, & \text{for a UHR MU PPDU} \\ 0, & \text{otherwise} \end{cases}$$

$$\chi_{\text{ELR-MARK}} = \begin{cases} 1, & \text{for a UHR ELR PPDU} \\ 0, & \text{otherwise} \end{cases}$$

$$\chi_{\text{ELR-SIG}} = \begin{cases} 1, & \text{for a UHR ELR PPDU} \\ 0, & \text{otherwise} \end{cases}$$

$1 \le i_{TX} \le N_{TX}$

$t_{\text{L-LTF}} = T_{\text{L-STF}}$

$t_{\text{L-SIG}} = t_{\text{L-LTF}} + T_{\text{L-LTF}}$

$t_{\text{RL-SIG}} = t_{\text{L-SIG}} + T_{\text{L-SIG}}$

$t_{\text{U-SIG}} = t_{\text{RL-SIG}} + T_{\text{RL-SIG}}$

$$t_{\text{UHR-SIG}} = \begin{cases} t_{\text{U-SIG}} + T_{\text{U-SIG}}, & \text{for a UHR MU PPDU} \\ \text{undefined}, & \text{otherwise} \end{cases}$$

$$t_{\text{ELR-MARK}} = \begin{cases} t_{\text{U-SIG}} + T_{\text{U-SIG}}, & \text{for a UHR ELR PPDU} \\ \text{undefined}, & \text{otherwise} \end{cases}$$

Copyright © 2025 IEEE. All rights reserved.
This is an unapproved IEEE Standards Draft, subject to change.

$$t_{\text{UHR-STF}} = \begin{cases} t_{\text{UHR-SIG}} + N_{\text{UHR-SIG}} T_{\text{UHR-SIG}}, & \text{for a UHR MU PPDU} \\ t_{\text{U-SIG}} + T_{\text{U-SIG}}, & \text{for a UHR TB PPDU} \\ t_{\text{ELR-MARK}} + T_{\text{ELR-MARK}} & \text{for a UHR ELR PPDU} \end{cases}$$

$$t_{\text{UHR-LTF}} = \begin{cases} t_{\text{UHR-STF}} + T_{\text{UHR-STF-NT}}, & \text{for a UHR MU PPDU or UHR ELR PPDU} \\ t_{\text{UHR-STF}} + T_{\text{UHR-STF-T}}, & \text{for a UHR TB PPDU} \end{cases}$$

$$t_{\text{ELR-SIG}} = \begin{cases} t_{\text{UHR-LTF}} + T_{\text{UHR-LTF,ELR}}, & \text{for a UHR ELR PPDU} \\ \text{undefined}, & \text{otherwise} \end{cases}$$

$$t_{\text{UHR-Data}} = \begin{cases} t_{\text{ELR-SIG}} + T_{\text{ELR-SIG}}, & \text{for a UHR ELR PPDU} \\ t_{\text{UHR-LTF}} + N_{\text{UHR-LTF}} T_{\text{UHR-LTF-SYM}}, & \text{otherwise} \end{cases}$$

$$t_{\text{UHR-PE}} = t_{\text{UHR-Data}} + N_{\text{SYM}} T_{\text{SYM}}$$

In a UHR MU PPDU and UHR ELR PPDU, for each field excluding the PE field, $r_{\text{Field}}^{i_{TX}}(t)$ is defined as the summation of one or more subfields. Each subfield, $r_{\text{Subfield}}^{i_{TX}}(t)$, is defined to be an inverse Fourier transform in Equation (38-4).

$$r_{\text{Subfield}}^{i_{TX}}(t) = \tag{38-4}$$

$$w_{T_{\text{Subfield}}}(t) \sum_{r=0}^{N_{RU}-1} \frac{\alpha_r \beta_r^{\text{Field}}}{\sqrt{N_{norm,r}}} \eta_{\text{Field}} \sum_{k \in K_r} \sum_{u=0}^{N_{user,r}-1} \sum_{m=1}^{N_{SS,r,u}}$$

$$[Q_{k,u}]_{i_{TX},m} \gamma_{k,\text{BW}} X_{k,r,u}^{m} \exp(j2\pi k \Delta_{F,\text{Field}}(t - T_{GI,\text{Field}} - T_{CS,\text{UHR}}(M_{r,u} + m)))$$

In a UHR TB PPDU, transmitted by user u in the r-th occupied RU, MRU or DRU, each subfield, $r_{\text{Subfield},r,u}^{i_{TX}}(t)$, is defined in Equation (38-5).

$$r_{\text{Subfield},r,u}^{i_{TX}}(t) = w_{T_{\text{Subfield}}}(t) \frac{\beta_r^{\text{Field}}}{\sqrt{N_{norm,r}}} \eta_{\text{Field}} \sum_{k \in K_r} \sum_{m=1}^{N_{SS,r,u}} \tag{38-5}$$

$$[Q_{k,u}]_{i_{TX},m} \gamma_{k,\text{BW}} X_{k,r,u}^{m} \exp(j2\pi k \Delta_{F,\text{Field}}(t - T_{GI,\text{Field}} - T_{CS,\text{UHR}}(M_{r,u} + m)))$$

In a UHR MU PPDU and UHR ELR PPDU, the total power of the time domain UHR modulated field signals summed over all transmit chains should not exceed the total power of the time domain pre-UHR modulated field signals summed over all transmit chains.

For a UHR TB PPDU, the total power of the time domain UHR modulated field signals summed over all transmit chains may exceed the total power of the time domain pre-UHR modulated field signals summed

Copyright © 2025 IEEE. All rights reserved.
This is an unapproved IEEE Standards Draft, subject to change.

over all transmit chains by up to 3 dB only if the size of the assigned RU or MRU is the same or smaller than 242 tones. Otherwise, the total power of the time domain UHR modulated field signals summed over all transmit chains should not exceed the total power of the time domain pre-UHR modulated field signals summed over all transmit chains.

For notational simplicity, the parameter bandwidth is omitted from some bandwidth dependent terms.

In Equation (38-4) and Equation (38-5), the following notations are used:

$w_{T_{\text{Subfield}}}(t)$ is a windowing function. An example function, $w_{T_{\text{Subfield}}}(t)$, is given in 17.3.2.5 (Mathematical conventions in the signal descriptions). T_{Subfield} is $T_{\text{L-STF}}$ for L-STF, $T_{\text{L-LTF}}$ for L-LTF, T_{SYML} for L-SIG, RL-SIG, U-SIG field, UHR-SIG and ELR-MARK, $T_{\text{UHR-STF-NT}}$ for UHR-STF of UHR MU PPDU and UHR ELR PPDU, $T_{\text{UHR-STF-T}}$ for UHR-STF of UHR TB PPDU, $T_{\text{UHR-LTF-SYM}}$ for UHR-LTF of UHR MU PPDU and UHR TB PPDU, $T_{\text{SYM,UHR-LTF,ELR}}$ for UHR-LTF of UHR ELR PPDU, $T_{\text{SYM,ELR-SIG}}$ for ELR-SIG, T_{SYM} for UHR-Data of UHR MU PPDU and UHR TB PPDU, and $T_{\text{SYM,Data,ELR}}$ for UHR Data of UHR ELR PPDU.

N_{RU} is defined in Table 38-21 (Frequently used parameters).

$N_{Norm,r}$ For pre-UHR modulated fields, $N_{Norm,r} = N_{TX}$. For UHR modulated fields, $N_{Norm,r} = N_{SS,r,total}$ for a UHR MU PPDU, and $N_{Norm,r} = N_{SS,r,u}$ for a UHR TB PPDU, and $N_{Norm,r} = 1$ for a UHR ELR PPDU where $N_{SS,r,total}$ and $N_{SS,r,u}$ are given in Table 38-21 (Frequently used parameters).

α_r is the power boost factor of the *r*-th occupied RU or MRU in a UHR MU PPDU as defined in 37.13.1.2 (POWER_BOOST_FACTOR) and is set to the value of POWER_BOOST_FACTOR parameter in the TXVECTOR. $\alpha_r = 1$ in a UHR ELR PPDU.

K_r For pre-UHR modulated fields, K_r is the set of subcarriers indices for all the tones in the corresponding 20 MHz channels where UHR modulated fields are located for the *r*-th occupied RU or MRU. For UHR modulated fields in a nonpunctured non-OFDMA UHR PPDU that is not a UHR ELR PPDU, K_r is the set of subcarriers indices from $-N_{SR}$ to N_{SR} excluding DC subcarriers as defined in 38.3.13 (Timing-related parameters) and null subcarriers as defined in 38.3.2.3 (Null subcarriers) if present. For the UHR data field in a nonpunctured non-OFDMA UHR PPDU using SU transmission when IM is enabled, K_r is the set of subcarriers indices from $-N_{SR}$ to N_{SR} excluding DC subcarriers as defined in 38.3.13 (Timing-related parameters) and IM pilots as defined in 38.3.5 (Interference mitigation). For UHR modulated fields in a punctured non-OFDMA UHR PPDU and an OFDMA UHR PPDU, K_r is the set of subcarriers indices for the tones in the *r*-th RU, MRU or DRU. For UHR modulated fields in a UHR ELR PPDU, K_r is the set of subcarriers indices in the *r*-th 52-tone RU where $r = 0, 1, 2, 3$. Data and pilot subcarrier indices for an RU, MRU or DRU are defined in 38.3.2.1 (Tone plan for RUs and MRUs).

$|\Phi|$ is the cardinality of the set Φ.

β_r^{Field} is the power normalization factor of the corresponding field in the *r*-th occupied RU, MRU or DRU and is defined in Equation (36-11) with pre-EHT modulated fields and EHT modulated fields replaced with pre-UHR modulated fields and UHR modulated fields, respectively.

$N_{\text{Field}}^{\text{Tone}}$ is the number of tones in the corresponding field. $N_{\text{Field}}^{\text{Tone}}$ for UHR PPDUs is the same as that for EHT PPDUs specified in Table 36-26 (Number of modulated subcarriers and guard interval duration values for EHT PPDU fields) with EHT PPDU, EHT-SIG. $T_{GI,\text{Pre-EHT}}$ replaced with UHR PPDU, UHR-SIG and $T_{GI,\text{Pre-EHT}}$, respectively. $N_{\text{Field}}^{\text{Tone}}$ or a UHR ELR PPDU is the same as

Copyright © 2025 IEEE. All rights reserved.
This is an unapproved IEEE Standards Draft, subject to change.

$N_{\text{Field}}^{\text{Tone}}$ for 20 MHz bandwidth, with $N_{\text{Field}}^{\text{Tone}}$ for ELR-MARK having the same value as that for U-SIG.

$N_{20\text{MHz}}$ is defined in Equation (36-11a).

$\Omega_{20\text{MHz}}$ is the set of 20 MHz channels in which pre-UHR modulated fields are located. The set of 20 MHz channels contains one or more values in the range 0 to $N_{20\text{MHz}}$ - 1 for a UHR MU PPDU with preamble puncturing, or a UHR TB PPDU, and it contains all values in the range 0 to $N_{20\text{MHz}}$ - 1 for a UHR MU PPDU without preamble puncturing. $\Omega_{20\text{MHz}}$ contains only one value 0 for a UHR ELR PPDU.

$\varepsilon_{\text{Field}}$ is the power deboosting factor of the corresponding pre-UHR modulated field relative to the L-SIG field. $\varepsilon_{\text{Field}}$ is defined in Equation (36-11b).

Γ_r^{Field} equals the number of modulated subcarriers within K_r (see Table 38-21 (Frequently used parameters)) for the UHR-STF and Data fields. For the UHR-LTF field, Γ_r^{Field} is defined as below to ensure per tone power are the same for both UHR-LTF and Data fields, regardless of 1×, 2×, or 4× UHR-LTF.

$$\Gamma_r^{\text{UHR-LTF}} = \begin{cases} |K_r|, & \text{for a } 4 \times \text{UHR-LTF} \\ |K_r|/2, & \text{for a } 2 \times \text{UHR-LTF} \\ |K_r|/4, & \text{for an } 1 \times \text{UHR-LTF} \end{cases}$$

$Q_{k,u}$ is the spatial mapping matrix for user u on subcarrier k. For UHR modulated fields, $Q_{k,u}$ is a matrix with N_{TX} rows and $N_{SS,r,u}$ columns. For pre-UHR modulated fields, $Q_{k,u}$ is a column vector with N_{TX} elements, with element i_{TX} being $\exp(-j2\pi k\Delta_{F,\text{Pre-UHR}}T_{CS}^{i_{TX}})$, where $T_{CS}^{i_{TX}}$ represents the cyclic shift for the transmitter chain whose value is defined in 38.3.15.2.1 (Cyclic shift for pre-UHR modulated fields).

$\Delta_{F,\text{Field}}$ is the subcarrier frequency spacing of the corresponding field. $\Delta_{F,\text{Field}}$ is equal to $\Delta_{F,\text{Pre-UHR}}$ and $\Delta_{F,\text{UHR}}$ for pre-UHR modulated fields and UHR modulated fields, respectively, where $\Delta_{F,\text{Pre-UHR}}$ and $\Delta_{F,\text{UHR}}$ are given in Table 38-18 (Timing-related constants).

$M_{r,u}$ is given in Table 38-21 (Frequently used parameters).

$X_{k,r,u}^m$ is the frequency-domain symbol assigned for subcarrier k of user u in the r-th RU, MRU or or DRU for the m-th spatial stream. Some of the $X_{k,r,u}^m$ within $-N_{SR} \le k \le N_{SR}$ have a value of zero. Examples of such cases include the DC tones, guard tones on each side of the transmit spectrum, the null subcarriers in a UHR OFDMA PPDU, as well as the unmodulated tones of L-STF, UHR-STF, and UHR-LTF fields.

$T_{GI,\text{Field}}$ is the guard interval duration used for each OFDM symbol in the corresponding field. The value of guard interval duration for each UHR PPDU field is defined in Table 38-18 (Timing-related constants).

$T_{CS,\text{UHR}}(l)$ For pre-UHR modulated fields, $T_{CS,\text{UHR}}(l) = 0$. For UHR modulated fields, $T_{CS,\text{UHR}}(l)$ represents the cyclic shift per spatial stream, whose value is defined in 38.3.15.2.2 (Cyclic shift for UHR modulated fields).

$\gamma_{k,BW}$ is used to represent a phase rotation applied to the k-th subcarrier for a given bandwidth BW, For UHR modulated fields, $\gamma_{k,BW} = 1$ for all subcarriers. For pre-UHR modulated fields, $\gamma_{k,BW}$ is the same as $\gamma_{k,BW}$ for pre-EHT modulated fields defined in 36.3.11.4 (Transmitted signal).

Copyright © 2025 IEEE. All rights reserved.
This is an unapproved IEEE Standards Draft, subject to change.

η_{Field} is the power scaling factor of a given field within an OFDM symbol. For UHR ELR PPDU, η_{Field} is $\sqrt{2}$ for all the subcarriers of the L-STF, L-LTF, UHR-STF, and UHR-LTF fields. For all the subcarriers of the L-STF, L-LTF, L-SIG, RL-SIG, and U-SIG fields in UHR TB PPDU, $\eta_{\text{Field}} = \left[\frac{1}{\sqrt{2}}, 1\right]$, meaning in the range $\frac{1}{\sqrt{2}}$ to 1. For other fields in UHR ELR PPDU and UHR TB PPDU, $\eta_{\text{Field}} = 1$.

Table 38-22—Number of modulated subcarriers and guard interval duration values for UHR PPDU fields

Field	$N_{\text{Field}}^{\text{Tone}}$ as a function of bandwidth					Guard interval duration
	20 MHz	40 MHz	80 MHz	160 MHz	320 MHz	
L-STF	12	24	48	96	192	—
L-LTF	52	104	208	416	832	$T_{GI,\text{L-LTF}}$
L-SIG in a UHR PPDU	56	112	224	448	896	$T_{GI,\text{Pre-UHR}}$
L-SIG in a non-HT duplicate PPDU	—	104	208	416	832	
RL-SIG	56	112	224	448	896	$T_{GI,\text{Pre-UHR}}$
U-SIG	56	112	224	448	896	$T_{GI,\text{Pre-UHR}}$
UHR-SIG	56	112	224	448	896	$T_{GI,\text{Pre-UHR}}$
ELR-SIG	208	—	—	—	—	$T_{GI,\text{ELR-SIG}}$
NON_HT_DUP_OFDM-Data (see NOTE)	—	104	208	416	832	$T_{GI,\text{Pre-UHR}}$
NOTE—For notational convenience, NON_HT_DUP_OFDM-Data is used as a label for the Data field of a NON_HT PPDU with format type NON_HT_DUP_OFDM.						

38.3.15 UHR preamble

38.3.15.1 Introduction

The UHR preamble consists of pre-UHR modulated fields and UHR modulated fields. The pre-UHR modulated fields for the three UHR PPDU formats are the following:

— L-STF, L-LTF, L-SIG, RL-SIG, and U-SIG fields of a UHR TB PPDU
— L-STF, L-LTF, L-SIG, RL-SIG, U-SIG, and UHR-SIG fields of a UHR MU PPDU
— L-STF, L-LTF, L-SIG, RL-SIG, U-SIG, and ELR-MARK fields of a UHR ELR PPDU

The UHR modulated fields in the preamble for the UHR TB PPDU and UHR MU PPDU formats are the UHR-STF and UHR-LTF fields.

The UHR modulated fields in the preamble for the UHR ELR PPDU format are the UHR-STF, UHR-LTF and ELR-SIG fields.

Copyright © 2025 IEEE. All rights reserved.
This is an unapproved IEEE Standards Draft, subject to change.

For a UHR MU PPDU in DL non-OFDMA Co-BF transmission(#9163), the pre-UHR modulated fields are non-beamformed and the UHR modulated fields including the UHR-STF and UHR-LTF fields are beamformed using the same beamforming steering matrix as the Data field.

For a UHR MU PPDU in DL non-OFDMA Co-BF transmission(#9163), the pre-UHR modulated fields shall have identical content across all participating APs and shall be transmitted by all participating APs.

For a UHR STA with operating bandwidth larger than 80 MHz, the pre-UHR modulated field design ensures that a UHR STA is required to process only one 80 MHz frequency subblock of the pre-UHR modulated fields to get all the assignment information for itself. For a UHR PPDU with bandwidth larger than 80 MHz, a UHR STA can get all required information from processing the primary 80 MHz or the 80 MHz in which the STA is operating and does not need to process other 80 MHz frequency subblocks.

The pre-UHR modulated fields (see Figure 38-18 (Timing boundaries for UHR MU PPDU and UHR TB PPDU fields) and Figure 38-19 (Timing boundaries for UHR ELR PPDU fields)) are not transmitted in 20 MHz subchannels in which the preamble is punctured.

For a UHR MU PPDU and an EHT(#9759) MU PPDU in DL SU Co-SR mode 1 transmission(#9164) as defined in 38.3.22.2.1 (Co-SR mode 1), the L-STF, L-LTF, L-SIG and RL-SIG fields shall have identical content across all participating APs and shall be transmitted by all participating APs.

For a UHR MU PPDU in DL SU Co-SR mode 2 transmission(#9164) as defined in 38.3.22.2.2 (Co-SR mode 2), the L-STF, L-LTF, L-SIG, RL-SIG and U-SIG fields shall have identical content across all participating APs and shall be transmitted by all participating APs.

The U-SIG field of the UHR MU PPDU in DL SU Co-SR transmission using either Co-SR(#9165) mode 1 or mode 2 shall be as defined in 38.3.15.7.2 (Content)(#7334, 11604).

38.3.15.2 Cyclic shift

38.3.15.2.1 Cyclic shift for pre-UHR modulated fields

The cyclic shift value $T_{CS}^{i_{TX}}$ for the L-STF, L-LTF, L-SIG, RL-SIG, U-SIG, UHR-SIG and ELR-MARK fields of the PPDU for transmit chain i_{TX} out of a total of N_{TX} are defined in Table 21-10 (Cyclic shift values for L-STF, L-LTF, L-SIG, and VHT-SIG-A fields of the PPDU). In UL MU transmission, the cyclic shift value $T_{CS}^{i_{TX}}$ is based on the local transmit chain indices at each STA. The cyclic shift for pre-UHR modulated fields in UHR MU PPDU used for Co-BF transmission is based on local transmit chain index at each AP.

38.3.15.2.2 Cyclic shift for UHR modulated fields

Throughout the UHR modulated fields of the preamble, cyclic shifts are applied to prevent unintended beamforming when correlated signals are transmitted in multiple spatial streams. The same cyclic shifts applied to the UHR modulated fields of the preamble are also applied to these streams during the transmission of the Data field of the UHR PPDU except for the UHR TB PPDU with DRU transmission (38.3.15.10.3 (CSD for DRU transmission)).

In the UHR TB PPDU with DRU transmission, the same cyclic shifts applied to the UHR LTF field are also applied to multiple spatial streams during the transmission of the Data field. The UHR-STF field of the UHR TB PPDU with DRU transmission uses the CSD values specified in 38.3.15.10.3 (CSD for DRU transmission).(#9070)

Copyright © 2025 IEEE. All rights reserved.
This is an unapproved IEEE Standards Draft, subject to change.

The cyclic shifts for UHR modulated fields in DL non-OFDMA Co-BF transmission are based on the stream indices assigned across all APs.(#8963)

The cyclic shifts for UHR modulated fields in DL SU Co-SR transmission are based on local stream indices at each AP.(#8963)

For the *r*-th RU, the cyclic shift value $T_{CS,\,\mathrm{UHR}}(n)$ for the UHR modulated fields for spatial stream *n* out of $N_{SS,\,r,\,total}$ total spatial streams is shown in Table 21-11 (Cyclic shift values for the VHT modulated fields of a PPDU).

38.3.15.3 L-STF

The time domain representation of the L-STF field, transmitted on transmit chain i_{TX} shall be as specified in Equation (38-6). The equation applies to all signals up to 320 MHz bandwidth PPDU with or without preamble puncturing.

$$r_{\text{L-STF}}^{i_{TX}}(t) = \frac{\varepsilon}{\sqrt{N_{TX} \cdot N_{\text{L-STF}}^{\text{Tone}} \cdot \frac{|\Omega_{20\text{MHz}}|}{N_{20\text{MHz}}}}} w_{T_{\text{L-STF}}}(t)\eta_{\text{L-STF}} \sum_{i_{BW} \in \Omega_{20\text{MHz}}} \sum_{k=-26}^{26} \tag{38-6}$$

$$(\gamma_{(k-K_{\text{Shift}}(i_{BW})),\,\text{BW}} S_{k,\,20} \exp(j2\pi(k-K_{\text{Shift}}(i_{BW}))\Delta_{F,\,\text{Pre-UHR}}(t-T_{CS}^{i_{TX}})))$$

where

ε is a power scaling factor with the value $\varepsilon = \sqrt{\frac{N_{\text{L-LTF}}^{\text{Tone}}}{N_{\text{L-SIG}}^{\text{Tone}}}}$.

$\eta_{\text{L-STF}}$ is defined in Equation (38-4) and Equation (38-5) for a UHR ELR PPDU and a UHR TB PPDU. Otherwise, $\eta_{\text{L-STF}} = 1$.

$K_{\text{Shift}}(i) = (N_{20\text{MHz}} - 1 - 2i) \cdot 32$

$T_{CS}^{i_{TX}}$ represents the cyclic shift for transmit chain i_{TX} with a value as described in 38.3.15.2.1 (Cyclic shift for pre-UHR modulated fields).

$N_{\text{L-STF}}^{\text{Tone}}$ is the value given in Table 38-22 (Number of modulated subcarriers and guard interval duration values for UHR PPDU fields).

$\Omega_{20\text{MHz}}$ is a set of 20 MHz channels where pre-UHR modulated fields are located. The set of 20 MHz channels contains one or more values in the range 0 to $N_{20\text{MHz}} - 1$ for a UHR TB PPDU or UHR MU PPDU with preamble puncturing, and it contains all values in the range 0 to $N_{20\text{MHz}} - 1$ for a UHR MU PPDU without preamble puncturing. It contains one value, i.e., 0 for UHR ELR PPDU.

$$N_{20\text{MHz}} = \begin{cases} 1, & \text{if CH_BANDWIDTH is CBW20} \\ 2, & \text{if CH_BANDWIDTH is CBW40} \\ 4, & \text{if CH_BANDWIDTH is CBW80} \\ 8, & \text{if CH_BANDWIDTH is CBW160} \\ 16, & \text{if CH_BANDWIDTH_IN_NON_HT is CBW320 or} \\ & \quad \text{CH_BANDWIDTH is CBW320-1 or CBW320-2} \end{cases}$$

$S_{k,\,20}$ is defined as S_k, where S_k is an element of $S_{-26,\,26}$ for $-26 \le k \le 26$ from Equation (19-8).

Copyright © 2025 IEEE. All rights reserved.
This is an unapproved IEEE Standards Draft, subject to change.

i_{BW} is the index of 20 MHz channels, $0 \le i_{BW} \le N_{20\text{MHz}} - 1$.

Other variables in Equation (38-6) are defined in 38.3.13 (Timing-related parameters) and 38.3.14 (Mathematical description of signals).

38.3.15.4 L-LTF

The time domain representation of the L-LTF field, transmitted on transmit chain i_{TX}, shall be as specified in Equation (38-7). The equation applies to all signals up to 320 MHz bandwidth PPDU with or without preamble puncturing.

$$r_{\text{L-LTF}}^{i_{TX}}(t) = \frac{\varepsilon}{\sqrt{N_{TX} \cdot N_{\text{L-LTF}}^{\text{Tone}} \cdot \frac{|\Omega_{20\text{MHz}}|}{N_{20\text{MHz}}}}} w_{T_{\text{L-LTF}}}(t) \eta_{\text{L-LTF}} \sum_{i_{BW} \in \Omega_{20\text{MHz}}} \sum_{k=-26}^{26} \tag{38-7}$$

$$(\gamma_{(k - K_{\text{Shift}}(i_{BW})),\,\text{BW}} L_{k,\,20} \exp(j2\pi(k - K_{\text{Shift}}(i_{BW})) \Delta_{F,\,\text{Pre-UHR}}(t - T_{GI,\,\text{L-LTF}} - T_{CS}^{i_{TX}})))$$

where

ε is a power scaling factor with the value $\varepsilon = \sqrt{\frac{N_{\text{L-LTF}}^{\text{Tone}}}{N_{\text{L-SIG}}^{\text{Tone}}}}$.

$\eta_{\text{L-LTF}}$ is defined in Equation (38-4) and Equation (38-5) for a UHR ELR PPDU and a UHR TB PPDU. Otherwise, $\eta_{\text{L-LTF}} = 1$.

$T_{GI,\,\text{L-LTF}}$ is given in Table 38-18 (Timing-related constants).

$K_{\text{Shift}}(i) = (N_{20\text{MHz}} - 1 - 2i) \cdot 32$

$T_{CS}^{i_{TX}}$ represents the cyclic shift for transmit chain i_{TX} with a value as described in 38.3.15.2.1 (Cyclic shift for pre-UHR modulated fields).

$N_{\text{L-LTF}}^{\text{Tone}}$ is the value given in Table 38-22 (Number of modulated subcarriers and guard interval duration values for UHR PPDU fields).

$L_{k,\,20}$ is defined as L_k, where L_k is an element of $L_{-26,\,26}$ for $-26 \le k \le 26$ from Equation (17-8).

Other variables in Equation (38-7) are defined in 38.3.13 (Timing-related parameters) and 38.3.14 (Mathematical description of signals).

38.3.15.5 L-SIG

The L-SIG field is used to communicate rate and length information. The structure of the L-SIG field is defined in Figure 17-5 (SIGNAL field bit assignment).

In a UHR PPDU, the RATE field shall be set to the value representing 6 Mb/s in the 20 MHz channel spacing column of Table 17-6 (Contents of the SIGNAL field). In a non-HT duplicate PPDU, the RATE field is defined in 17.3.4.2 (RATE field) using the L_DATARATE parameter in the TXVECTOR.

The LENGTH field in a UHR PPDU is set to a value satisfying the condition that the remainder is zero when LENGTH is divided by 3. This remainder is used to differentiate a UHR PPDU from an HE PPDU.

For a UHR TB PPDU, the LENGTH field is set to the TXVECTOR parameter L_LENGTH + 2. For a UHR MU PPDU and for a UHR ELR PPDU, the LENGTH field is set to the value given by Equation (38-8).

Copyright © 2025 IEEE. All rights reserved.
This is an unapproved IEEE Standards Draft, subject to change.

NOTE—The TXVECTOR parameter L_LENGTH field of a UHR TB PPDU has the same value as the UL Length subfield of a Trigger frame. The UL Length subfield of a Trigger frame that solicits an HE TB PPDU, an EHT TB PPDU or a UHR TB PPDU is set following Equation (27-11) with $m = 2$ as defined in 37.4.2.2.3 (Allowed settings of the Trigger frame fields and TRS Control subfield), then the nonzero m is reversed for UHR TB PPDU by adding 2 as above.

$$\text{Length} = \left\lceil \frac{\text{TXTIME} - SignalExtension - 20}{4} \right\rceil \times 3 - 3 \tag{38-8}$$

where

TXTIME (in microseconds) is defined in 38.4.3 (TXTIME and PSDU_LENGTH calculation).

$SignalExtension$ is defined in Table 27-61 (HE PHY characteristics).

In a non-HT duplicate PPDU, the LENGTH field is defined in 17.3.4.3 (PHY LENGTH field) using the L_LENGTH parameter in the TXVECTOR.

The Reserved (R) field shall be set to 0.

The Parity (P) field has the even parity of bits 0–16.

The SIGNAL TAIL field shall be set to 0.

The L-SIG field shall be encoded, interleaved, and mapped following the steps described in 17.3.5.6 (Convolutional encoder), 17.3.5.7 (Data interleaving), and 17.3.5.8 (Subcarrier modulation mapping). The stream of 48 complex numbers generated by these steps is denoted by d_k, $k = 0, 1, \ldots, 47$ and is mapped to the data subcarriers within the range $[-26, 26]$. In addition, values $[-1, -1, -1, 1]$ are mapped to the extra subcarriers $[-28, -27, 27, 28]$ of the L-SIG field of a 20 MHz UHR PPDU. Pilots shall be inserted as described in 17.3.5.9 (Pilot subcarriers).

The time domain waveform of the L-SIG field, transmitted on transmit chain i_{TX}, shall be as given by Equation (38-9).

$$r_{\text{L-SIG}}^{i_{TX}}(t) \tag{38-9}$$

$$= \frac{1}{\sqrt{N_{TX} \cdot N_{\text{L-SIG}}^{\text{Tone}} \cdot \frac{|\Omega_{20\text{MHz}}|}{N_{20\text{MHz}}}}} w_{T_{\text{L-SIG}}}(t) \eta_{\text{L-SIG}} \sum_{i_{BW} \in \Omega_{20\text{MHz}}} \sum_{k=-28}^{28}$$

$$(\gamma_{(k - K_{\text{Shift}}(i_{BW})),\,\text{BW}}(D_{k,\,20} + p_0 P_k) \exp(j2\pi(k - K_{\text{Shift}}(i_{BW}))\Delta_{F,\,\text{Pre-UHR}}(t - T_{GI,\,\text{Pre-UHR}} - T_{CS}^{i_{TX}})))$$

where

$\eta_{\text{L-SIG}}$ is given in Equation (38-5) for a UHR TB PPDU. Otherwise, $\eta_{\text{L-SIG}} = 1$

$T_{GI,\,\text{Pre-UHR}}$ is given in Table 38-18 (Timing-related constants).

$K_{\text{Shift}}(i) = (N_{20\text{MHz}} - 1 - 2i) \cdot 32$

Copyright © 2025 IEEE. All rights reserved.
This is an unapproved IEEE Standards Draft, subject to change.

$$D_{k,20} = \begin{cases} 0, & k = 0, \pm 7, \pm 21 \\ -1, & k = -28, \pm 27 \\ 1, & k = 28 \\ d_{M^r_{20}(k)} & \text{otherwise} \end{cases}$$

$$M^r_{20}(k) = \begin{cases} k+26, & -26 \le k \le -22 \\ k+25, & -20 \le k \le -8 \\ k+24, & -6 \le k \le -1 \\ k+23, & 1 \le k \le 6 \\ k+22, & 8 \le k \le 20 \\ k+21, & 22 \le k \le 26 \end{cases}$$

P_k is defined in 17.3.5.10 (OFDM modulation).

p_0 is the first pilot value in the sequence defined in 17.3.5.10 (OFDM modulation)

$N^{\text{Tone}}_{\text{L-SIG}}$ is defined in Table 38-22 (Number of modulated subcarriers and guard interval duration values for UHR PPDU fields).

$T^{i_{TX}}_{CS}$ represents the cyclic shift for transmit chain i_{TX} with a value given in 38.3.15.2.1 (Cyclic shift for pre-UHR modulated fields).

Other variables in Equation (38-9) are defined in 38.3.13 (Timing-related parameters) and 38.3.14 (Mathematical description of signals).

NOTE—$M^r_{20}(k)$ is a "reverse" function of the function $M(k)$ defined in 17.3.5.10 (OFDM modulation).

38.3.15.6 RL-SIG

The RL-SIG field is a repeat of the L-SIG field and is used to differentiate a UHR PPDU from a non-HT PPDU, HT PPDU, and VHT PPDU.

The time domain waveform of the RL-SIG field, transmitted on transmit chain i_{TX}, shall be as given by Equation (38-10).

$$r^{i_{TX}}_{\text{RL-SIG}}(t) = \tag{38-10}$$

$$\frac{1}{\sqrt{N_{TX} \cdot N^{\text{Tone}}_{\text{RL-SIG}} \cdot \frac{|\Omega_{20\text{MHz}}|}{N_{20\text{MHz}}}}} w_{T_{\text{RL-SIG}}}(t) \eta_{\text{RL-SIG}} \sum_{i_{BW} \in \Omega_{20\text{MHz}}} \sum_{k=-28}^{28}$$

$$(\gamma_{(k-K_{\text{Shift}}(i_{BW})),\,\text{BW}}(D_{k,20} + p_1 P_k) \exp(j2\pi(k - K_{\text{Shift}}(i_{BW}))\Delta_{F,\,\text{Pre-UHR}}(t - T_{GI,\,\text{Pre-UHR}} - T^{i_{TX}}_{CS})))$$

where

$\eta_{\text{RL-SIG}}$ is given in Equation (38-5) for a UHR TB PPDU. Otherwise, $\eta_{\text{RL-SIG}} = 1$

p_1 is the second pilot value in the sequence defined in 17.3.5.10 (OFDM modulation).

Other variables in Equation (38-10) are defined in 36.3.10 (Timing-related parameters) and 38.3.14 (Mathematical description of signals).

Copyright © 2025 IEEE. All rights reserved.
This is an unapproved IEEE Standards Draft, subject to change.

All the other parameters are described in the variable list of Equation (38-9).

38.3.15.7 U-SIG

38.3.15.7.1 General

The U-SIG field carries information necessary to interpret UHR PPDUs. The integer fields of the U-SIG field are transmitted in unsigned binary format, LSB first, where the LSB is in the lowest numbered bit position.

38.3.15.7.2 Content

The U-SIG field in the UHR preamble is designed for backward and forward compatibility. It includes five(#8211) version independent fields (i.e., PHY Version Identifier, Bandwidth, UL/DL, BSS Color, and TXOP) in the beginning and CRC and Tail fields at the end, where each of these fields has consistency in location, bitwidth and interpretation across multiple IEEE 802.11 PHY clauses that are defined for 2.4 GHz, 5 GHz, and 6 GHz spectrum starting from Clause 36 (Extremely high throughput (EHT) PHY specification). In addition, the U-SIG field in the UHR preamble has some version dependent fields specific to UHR.

The length of the U-SIG field for a UHR PPDU(#8966, 11550) is two OFDM symbols.

Similar to their counterparts in the EHT preamble, reserved fields in the UHR preamble or reserved values of the fields in the UHR preamble are divided into two categories: Validate (which indicates whether to continue reception of a PPDU at an EHT or UHR STA) and Disregard (which has no impact on a UHR STA's continued reception of the PPDU). For further details on the definition of these two categories, refer to 36.3.12.7.2 (Content). For further details on the receive behavior when encountered with Validate and Disregard fields or any field as being set to a value identified as Validate or Disregard, refer to 38.3.29 (UHR receive procedure).

It is possible that despite of passing the CRC, the U-SIG content is pointing to an invalid transmit configuration. The UHR receive procedure in 38.3.29 (UHR receive procedure) is designed to perform further checks to avoid unnecessary processing of PPDUs with such invalid transmit configurations(#8967).

For a 40 MHz, 80 MHz, 160 MHz or 320 MHz UHR MU PPDU, the U-SIG field content shall be identical in all nonpunctured 20 MHz subchannels except for a 160 MHz or 320 MHz UHR MU PPDU in DL OFDMA transmission (with TXVECTOR parameter UHR_PPDU_TYPE equal to 0), where the Punctured Channel Information field might have different values between different 80 MHz frequency sub-blocks.(#5341, #8798, #8968)

For a 40 MHz, 80 MHz, 160 MHz or 320 MHz UHR TB PPDU, the U-SIG content shall be identical in all nonpunctured 20 MHz subchannels where the non-AP UHR STA's UHR modulated fields are occupied.(#8215)

Copyright © 2025 IEEE. All rights reserved.
This is an unapproved IEEE Standards Draft, subject to change.

The U-SIG field for a UHR MU PPDU contains the fields listed in Table 38-23 (U-SIG field of a UHR MU PPDU).

Table 38-23—U-SIG field of a UHR MU PPDU

Two parts of U-SIG	Bit	Field	Number of bits	Description
U-SIG-1	B0–B2	PHY Version Identifier	3	Differentiate between different PHY clauses. Set to 1 for UHR. Values 2–7 are Validate. NOTE 1—A value of 0 indicates EHT (see 36.3.12.7.2).
	B3–B5	Bandwidth	3	Set to 0 for 20 MHz. Set to 1 for 40 MHz. Set to 2 for 80 MHz. Set to 3 for 160 MHz. Set to 4 for 320 MHz-1. Set to 5 for 320 MHz-2. See definition of 320 MHz-1 and 320 MHz-2 in 36.3.24.2 (Channelization for 320 MHz channel). Values 6 and 7 are Validate.
	B6	UL/DL	1	Indicates whether the PPDU is sent in UL or DL. Set to the TXVECTOR parameter UPLINK_FLAG. A value of 1 indicates the PPDU is addressed to an AP. A value of 0 indicates the PPDU is addressed to a non-AP STA.

Copyright © 2025 IEEE. All rights reserved.
This is an unapproved IEEE Standards Draft, subject to change.

Table 38-23—U-SIG field of a UHR MU PPDU *(continued)*

Two parts of U-SIG	Bit	Field	Number of bits	Description
	B7–B12	BSS Color	6	An identifier of the BSS. Set to the TXVECTOR parameter BSS_COLOR. In a DL SU Co-SR transmission or a DL non-OFDMA Co-BF transmission, it is the BSS color of the coordinating AP.(#8969)
	B13–B19	TXOP	7	If the TXVECTOR parameter TXOP_DURATION is UNSPECIFIED, set to 127 to indicate the absence of duration information. If the TXVECTOR parameter TXOP_DURATION is an integer value, set to a value less than 127 to indicate duration information for NAV setting and protection of the TXOP as follows: If the TXVECTOR parameter TXOP_DURATION is less than 512, set to $2 \times \lfloor \text{TXOP_DURATION} / 8 \rfloor$. Otherwise, set to $2 \times \lfloor (\text{TXOP_DURATION} - 512) / 128 \rfloor + 1$.
	B20–B25	BSS Color 2	6	If the UL/DL field is set to 0, the PPDU Type And Compression Mode field is set to 1 and the Co-BF/Co-SR Indication field is set to 0, it is the BSS color of(#8969) the coordinated AP in a DL SU Co-SR transmission. Set to the TXVECTOR parameter BSS_COLOR_2. If the UL/DL field is set to 0, the PPDU Type And Compression Mode field is set to 2 and the Co-BF/Co-SR Indication field is set to 0, it is the BSS color of(#8969) the coordinated AP in a DL non-OFDMA Co-BF transmission. Set to the TXVECTOR parameter BSS_COLOR_2. Otherwise, B20-B24 are set to all 1s and treat as Disregard. B25 is set to 1 and treat as Validate.

Copyright © 2025 IEEE. All rights reserved.
This is an unapproved IEEE Standards Draft, subject to change.

Table 38-23—U-SIG field of a UHR MU PPDU *(continued)*

Two parts of U-SIG	Bit	Field	Number of bits	Description
U-SIG-2	B0–B1	PPDU Type And Compression Mode	2	If the UL/DL field is set to 0: A value of 0 indicates a DL OFDMA transmission. A value of 1 indicates a UHR SU transmission or a DL SU Co-SR transmission. A value of 2 indicates a DL non-OFDMA MU-MIMO transmission or a DL non-OFDMA Co-BF transmission. NOTE 2—A value of 3 indicates an ELR PPDU. Refer to Table 38-26 (U-SIG field of a UHR ELR PPDU). If the UL/DL field is set to 1: A value of 1 indicates a UHR SU transmission. Value 2 is Validate. NOTE 3—A value of 0 indicates a TB PPDU. Refer to Table 38-25 (U-SIG field of a UHR TB PPDU). A value of 3 indicates an ELR PPDU. Refer to Table 38-26 (U-SIG field of a UHR ELR PPDU). NOTE 4—A UHR sounding NDP is not defined.(#M180) For further clarifications on all values of this field, refer to Table 38-24 (Combination of UL/DL field, PPDU Type And Compression Mode field and B2 of U-SIG-2).
	B2	Co-BF/Co-SR Indication	1	If the UL/DL field is set to 0 and the PPDU Type And Compression Mode field is set to 1: Indicates(#8880) whether it is a UHR SU transmission or a DL SU Co-SR transmission. Set to the TXVECTOR parameter COSR_DISABLED(#9763, #9764). A value of 0 indicates a DL SU Co-SR transmission. A value of 1 indicates a UHR SU transmission. If the UL/DL field is set to 0 and the PPDU Type And Compression Mode field is set to 2: Indicates(#8880) whether it is a DL non-OFDMA MU-MIMO transmission or a DL non-OFDMA Co-BF transmission. Set to the TXVECTOR parameter COBF_DISABLED(#9765, #9766). A value of 0 indicates a DL non-OFDMA Co-BF transmission. A value of 1 indicates a DL non-OFDMA MU-MIMO transmission. Otherwise, set to 1 and treat as Validate.

Copyright © 2025 IEEE. All rights reserved.
This is an unapproved IEEE Standards Draft, subject to change.

Table 38-23—U-SIG field of a UHR MU PPDU *(continued)*

Two parts of U-SIG	Bit	Field	Number of bits	Description
	B3–B7	Punctured Channel Information	5	If the PPDU Type And Compression Mode field is set to 1 regardless of the value of the UL/DL field, or the PPDU Type And Compression Mode field is set to 2 and the UL/DL field is 0: Indicates the puncturing information of this non-OFDMA transmission. See Table 36-30 (Definition of the Punctured Channel Information field in the U-SIG for an EHT MU PPDU using non-OFDMA transmissions) for the definition. Note that each defined puncturing pattern corresponds to an RU or MRU allocation in the non-OFDMA transmission, as shown in Table 36-30 (Definition of the Punctured Channel Information field in the U-SIG for an EHT MU PPDU using non-OFDMA transmissions). Undefined values of this field are Validate. If the PPDU Type And Compression Mode field is set to 0 and the UL/DL field is 0: If the Bandwidth field is set to a value between 2 and 5, which indicates an 80 MHz, 160 MHz or 320 MHz PPDU, then B3–B6 is a 4-bit bitmap that indicates which 20 MHz subchannel is punctured in the 80 MHz frequency subblock where U-SIG processing is performed. The 4-bit bitmap is indexed by the 20 MHz subchannels in ascending order with B3 indicating the lowest frequency 20 MHz subchannel. For each of the bits B3–B6, a value of 0 indicates that the corresponding 20 MHz channel is punctured, and a value of 1 is used otherwise. The following allowed punctured patterns (B3–B6) are defined for an 80 MHz frequency subblock: 1111 (no puncturing), 0111, 1011, 1101, 1110, 0011, 1100, and 1001. Any field values other than the allowed punctured patterns are Validate. Field value may be varied from one 80 MHz to the other. If the Bandwidth field is set to 0 or 1, which indicates a 20/40 MHz PPDU, B3–B6 are set to all 1s. Other values are Validate. B7 is set to 1 and Disregard. For further information on punctured channels, refer to 38.3.15.13 (UHR preamble of preamble punctured UHR MU PPDU and UHR TB PPDU)(#9218).
	B8	Validate	1	Set to 1 and treat as Validate.

Copyright © 2025 IEEE. All rights reserved.
This is an unapproved IEEE Standards Draft, subject to change.

Table 38-23—U-SIG field of a UHR MU PPDU *(continued)*

Two parts of U-SIG	Bit	Field	Number of bits	Description
	B9–B10	UHR-SIG MCS	2	Indicates the MCS used for modulating the UHR-SIG field. Set to 0 for UHR-MCS 0. Set to 1 for UHR-MCS 1. Set to 2 for UHR-MCS 3. Value 3 is Validate.(#9767, #9964, #10297, #11551)
	B11–B15	Number Of UHR-SIG Symbols	5	Indicates the number of UHR-SIG symbols. Set to a value that is the number of UHR-SIG symbols minus 1.
	B16–B19	CRC	4	CRC for bits 0–41 of the U-SIG field. Bits 0–41 of the U-SIG field correspond to bits 0–25 of the U-SIG-1 field followed by bits 0–15 of the U-SIG-2 field. The CRC computation uses the same polynomial as that in 27.3.11.7.3 (CRC computation).
	B20–B25	Tail	6	Used to terminate the trellis of the convolutional decoder. Set to 0.

In a 20 MHz DL non-OFDMA Co-BF transmission, the UHR-SIG MCS field shall be set to 0, and the Number Of UHR-SIG Symbols field shall be set to 3 if there are total 2 users across two BSSs, 4 if there are total 3 users across two BSSs, or 5 if there are total 4 users across two BSSs. In a 40 MHz, 80 MHz, 160 MHz or 320 MHz DL non-OFDMA Co-BF transmission, the UHR-SIG MCS field shall be set to 0, and the Number Of UHR-SIG Symbols field shall be set to 1 if there are total 2 users across two BSSs, or 3 if there are total 3 or 4 users across two BSSs. Any combinations of the UHR-SIG MCS field value and Number of UHR-SIG Symbols field value other than the above cases are Validate in a DL non-OFDMA Co-BF transmission.(#9767, #9768, #9964, #10297, #11551, #11552)

In a DL SU Co-SR transmission, the UHR-SIG MCS field shall be set to 0 and the Number Of UHR-SIG Symbols field shall be set to 1. Any other combinations of the UHR-SIG MCS field value and Number of UHR-SIG Symbols field value are Validate in a DL SU Co-SR transmission.(#9767, #9768, #9964, #10297, #11551, #11552)

In a UHR SU transmission, the Number Of UHR-SIG Symbols field shall be set to 0 if the UHR-SIG MCS field is set to 1 or 2, or 1 if the UHR-SIG MCS field is set to 0. Any combinations of the UHR-SIG MCS field value and Number of UHR-SIG Symbols field value other than the above cases are Validate in a UHR SU transmission.(#9166)

Copyright © 2025 IEEE. All rights reserved.
This is an unapproved IEEE Standards Draft, subject to change.

Table 38-24—Combination of UL/DL field, PPDU Type And Compression Mode field and B2 of U-SIG-2

U-SIG fields or bits			Description					
UL/DL	**PPDU Type And Compression Mode**	**B2 of U-SIG-2**	**UHR PPDU format**	**UHR-SIG present?**	**RU Allocation subfields present?**	**ELR-MARK(#6240, #6241, #9769) and ELR-SIG present?**	**Total number of User fields in MU PPDU or total(#9707) number of transmitting STAs in TB PPDU or ELR PPDU**	**Note**
0 (DL)	0	0	-	-	-	-	-	Validate
	0	1	UHR MU	Yes	Yes	No	≥ 1	DL OFDMA (including non-MU-MIMO and MU-MIMO).
	1	0	UHR MU	Yes	No	No	1	DL SU Co-SR transmission.
	1	1	UHR MU	Yes	No	No	1	UHR SU transmission that is not addressed to an AP.
	2	0	UHR MU	Yes	No	No	>1 across two BSSs	DL non-OFDMA Co-BF transmission.
	2	1	UHR MU	Yes	No	No	>1	DL non-OFDMA MU-MIMO.
	3	See NOTE 5	UHR ELR	No	No	Yes	1	UHR ELR transmission that is not addressed to an AP.

Copyright © 2025 IEEE. All rights reserved.
This is an unapproved IEEE Standards Draft, subject to change.

Table 38-24—Combination of UL/DL field, PPDU Type And Compression Mode field and B2 of U-SIG-2 *(continued)*

U-SIG fields or bits			Description					
UL/DL	**PPDU Type And Compression Mode**	**B2 of U-SIG-2**	**UHR PPDU format**	**UHR-SIG present?**	**RU Allocation subfields present?**	**ELR-MARK(#6240, #6241, #9769) and ELR-SIG present?**	**Total number of User fields in MU PPDU or total(#9707) number of transmitting STAs in TB PPDU or ELR PPDU**	**Note**
1 (UL)	0	0	-	-	-	-	-	Validate
	0	1	UHR TB	No	No	No	≥ 1	UL OFDMA or UL non-OFDMA (including non-MU-MIMO and MU-MIMO).
	1	0	-	-	-	-	-	Validate
	1	1	UHR MU	Yes	No	No	1	UHR SU transmission that is addressed to an AP.
	2	0 or 1	-	-	-	-	-	Validate
	3	See NOTE 5	UHR ELR	No	No	Yes	1	UHR ELR transmission that is addressed to an AP.

NOTE 5—If the PPDU Type And Compression Mode field is set to 3, B2 of U-SIG-2 is the LSB of the STA-ID field. The PPDU format does not depend on the value of this bit.
NOTE 6—A UHR sounding NDP is not defined.(#M180)

Copyright © 2025 IEEE. All rights reserved.
This is an unapproved IEEE Standards Draft, subject to change.

The U-SIG field for a UHR TB PPDU contains the fields listed in Table 38-25 (U-SIG field of a UHR TB PPDU).

Table 38-25—U-SIG field of a UHR TB PPDU

Two parts of U-SIG	Bit	Field	Number of bits	Description
U-SIG-1	B0–B2	PHY Version Identifier	3	Differentiate between different PHY clauses. Set to 1 for UHR. Values 2–7 are Validate. NOTE 7—A value of 0 indicates EHT (see 36.3.12.7.2).
	B3–B5	Bandwidth	3	Set to 0 for 20 MHz. Set to 1 for 40 MHz. Set to 2 for 80 MHz. Set to 3 for 160 MHz. Set to 4 for 320 MHz-1. Set to 5 for 320 MHz-2. See definition of 320 MHz-1 and 320 MHz-2 in 36.3.24.2 (Channelization for 320 MHz channel). Values 6 and 7 are Validate.
	B6	UL/DL	1	Set to 1 to indicate that the PPDU is addressed to the AP.
	B7–B12	BSS Color	6	An identifier of the BSS. Set to the TXVECTOR parameter BSS_COLOR.
	B13–B19	TXOP	7	If the TXVECTOR parameter TXOP_DURATION is UNSPECIFIED, set to 127 to indicate the absence of duration information. If the TXVECTOR parameter TXOP_DURATION is an integer value, set to a value less than 127 to indicate duration information for NAV setting and protection of the TXOP as follows: If the TXVECTOR parameter TXOP_DURATION is less than 512, set to $2 \times \lfloor \text{TXOP_DURATION} / 8 \rfloor$. Otherwise, set to $2 \times \lfloor (\text{TXOP_DURATION} - 512) / 128 \rfloor + 1$.
	B20–B25	Disregard	6	Set to the value of the TXVECTOR parameter TB_DISREGARD_IN_USIG1 and treat as Disregard. See Table 9-60 (Mapping from Special User Info field to U-SIG field in the EHT or UHR TB PPDU(#11563)).

Copyright © 2025 IEEE. All rights reserved.
This is an unapproved IEEE Standards Draft, subject to change.

Table 38-25—U-SIG field of a UHR TB PPDU *(continued)*

Two parts of U-SIG	Bit	Field	Number of bits	Description
U-SIG-2	B0–B1	PPDU Type And Compressed Mode	2	Set to 0 for a TB PPDU. Values of 2 is Validate. NOTE 8—A value of 1 indicates a UHR SU transmission. Refer to Table 38-23 (U-SIG field of a UHR MU PPDU). A value of 3 indicates an ELR PPDU. Refer to Table 38-26 (U-SIG field of a UHR ELR PPDU). For further clarification on all values of this field, refer to Table 38-24 (Combination of UL/DL field, PPDU Type And Compression Mode field and B2 of U-SIG-2).
	B2	Validate	1	Set to the value of the TXVECTOR parameter TB_VALIDATE_IN_USIG2 and treat as Validate. See Table 9-60 (Mapping from Special User Info field to U-SIG field in the EHT or UHR TB PPDU(#11563)). The default value is 1.

Copyright © 2025 IEEE. All rights reserved.
This is an unapproved IEEE Standards Draft, subject to change.

Table 38-25—U-SIG field of a UHR TB PPDU *(continued)*

Two parts of U-SIG	Bit	Field	Number of bits	Description
	B3–B6	Spatial Reuse 1	4	Indicates whether or not PSR spatial reuse is allowed in a subband of the PPDU during the transmission of this PPDU, and if PSR spatial reuse is allowed, indicates a value that is used to determine a limit on the transmit power of the PSRT PPDU. If the Bandwidth field indicates 20 MHz or 40 MHz, then this field applies to the lowest 20 MHz subband in frequency. If the Bandwidth field indicates 80 MHz, then this field applies to each 20 MHz subchannel of the lowest 40 MHz subband in frequency within the 80 MHz operating band. If the Bandwidth field indicates 160 MHz, then this field applies to each 20 MHz subchannel of the lowest 80 MHz subband in frequency within the 160 MHz operating band. If the Bandwidth field indicates 320 MHz-1 or 320 MHz-2, then this field applies to each 20 MHz subchannel of the lower 160 MHz subband in frequency within the 320 MHz operating band. Set to the value of the SPATIAL_REUSE(1) parameter of the TXVECTOR, which contains a value from Table 27-24 (Spatial Reuse field encoding for an HE TB PPDU). Note that Table 27-24 (Spatial Reuse field encoding for an HE TB PPDU) is applied to both(#11553) an EHT TB PPDU (see 35.11.2 (SPATIAL_REUSE) and 35.10 (EHT Spatial reuse operation)) and a UHR TB PPDU (see 35.11.2 (SPATIAL_REUSE) and 37.3 (UHR spatial(#7563) reuse operation)).

Copyright © 2025 IEEE. All rights reserved.
This is an unapproved IEEE Standards Draft, subject to change.

Table 38-25—U-SIG field of a UHR TB PPDU *(continued)*

Two parts of U-SIG	Bit	Field	Number of bits	Description
	B7–B10	Spatial Reuse 2	4	Indicates whether or not PSR spatial reuse is allowed in a subband of the PPDU during the transmission of this PPDU, and if PSR spatial reuse is allowed, indicates a value that is used to determine a limit on the transmit power of the PSRT PPDU. If the Bandwidth field indicates 20 MHz, this field is set to the same value as the Spatial Reuse 1 field, and Disregard. If the Bandwidth field indicates 40 MHz, this field applies to the upper 20 MHz subband in frequency. If operating in the 2.4 GHz band, this field is set to the same value as the Spatial Reuse 1 field. If the Bandwidth field indicates 80 MHz, then this field applies to each 20 MHz subchannel of the upper 40 MHz subband in frequency within the 80 MHz operating band. If the Bandwidth field indicates 160 MHz, then this field applies to each 20 MHz subchannel of the upper 80 MHz subband in frequency within the 160 MHz operating band. If the Bandwidth field indicates 320 MHz-1 or 320 MHz-2, then this field applies to each 20 MHz subchannel of the upper 160 MHz subband in frequency within the 320 MHz operating band. Set to the value of the SPATIAL_REUSE(2) parameter of the TXVECTOR, which contains a value from Table 27-24 (Spatial Reuse field encoding for an HE TB PPDU). Note that Table 27-24 (Spatial Reuse field encoding for an HE TB PPDU) is applied to both(#11553) an EHT TB PPDU (see 35.11.2 (SPATIAL_REUSE) and 35.10 (EHT Spatial reuse operation)) and a UHR TB PPDU (see 35.11.2 (SPATIAL_REUSE) and 37.3 (UHR spatial(#7563) reuse operation)).
	B11–B15	Disregard	5	Set to the value of the TXVECTOR parameter TB_DISREGARD_IN_USIG2 and treat as Disregard. See Table 9-60 (Mapping from Special User Info field to U-SIG field in the EHT or UHR TB PPDU(#11563)).
	B16–B19	CRC	4	CRC for bits 0–41 of the U-SIG field. Bits 0–41 of the U-SIG field correspond to bits 0–25 of the U-SIG-1 field followed by bits 0–15 of the U-SIG-2 field. The CRC computation uses the same polynomial as that in 27.3.11.7.3 (CRC computation).
	B20–B25	Tail	6	Used to terminate the trellis of the convolutional decoder. Set to 0.

Copyright © 2025 IEEE. All rights reserved.
This is an unapproved IEEE Standards Draft, subject to change.

The U-SIG field for a UHR ELR PPDU contains the fields listed in Table 38-26 (U-SIG field of a UHR ELR PPDU).

Table 38-26—U-SIG field of a UHR ELR PPDU

Two parts of U-SIG	Bit	Field	Number of bits	Description
U-SIG-1	B0–B2	PHY Version Identifier	3	Differentiate between different PHY clauses. Set to 1 for UHR. Values 2–7 are Validate. NOTE 9—A value of 0 indicates EHT (see 36.3.12.7.2).
	B3–B5	Bandwidth	3	Set to 0 for 20 MHz. Values 1–7 are Validate.
	B6	UL/DL	1	Indicates whether the PPDU is sent in UL or DL. Set to the TXVECTOR parameter UPLINK_FLAG. A value of 1 indicates the PPDU is addressed to an AP. A value of 0 indicates the PPDU is addressed to a non-AP STA. In 5 GHz band or 6 GHz band, set to 1; value(#9773) 0 is Validate.
	B7–B12	BSS Color	6	An identifier of the BSS. Set to the TXVECTOR parameter BSS_COLOR.
	B13–B19	TXOP	7	If the TXVECTOR parameter TXOP_DURATION is UNSPECIFIED, set to 127 to indicate the absence of duration information. If the TXVECTOR parameter TXOP_DURATION is an integer value, set to a value less than 127 to indicate duration information for NAV setting and protection of the TXOP as follows: If the TXVECTOR parameter TXOP_DURATION is less than 512, set to $2 \times \lfloor \text{TXOP_DURATION} / 8 \rfloor$. Otherwise, set to $2 \times \lfloor (\text{TXOP_DURATION} - 512) / 128 \rfloor + 1$.
	B20–B24	Disregard	5	Set to all 1s and treat as Disregard.
	B25	Validate	1	Set to 1 and treat as Validate.

Copyright © 2025 IEEE. All rights reserved.
This is an unapproved IEEE Standards Draft, subject to change.

Table 38-26—U-SIG field of a UHR ELR PPDU *(continued)*

Two parts of U-SIG	Bit	Field	Number of bits	Description
U-SIG-2	B0–B1	PPDU Type And Compression Mode	2	Set to 3 for an ELR PPDU. If the UL/DL field is set to 1, value 2 is Validate. NOTE 10—If the UL/DL field is set to 0, a value of 0 indicates a DL OFDMA transmission, a value of 1 indicates a UHR SU transmission or a DL SU Co-SR transmission and a value of 2 indicates a DL non-OFDMA MU-MIMO transmission or a DL non-OFDMA Co-BF transmission. If the UL/DL field is set to 1, a value of 1 indicates a UHR SU transmission. Refer to Table 38-23 (U-SIG field of a UHR MU PPDU). If the UL/DL field is set to 1, a value of 0 indicates a TB PPDU. Refer to Table 38-25 (U-SIG field of a UHR TB PPDU). For further clarifications on all values of this field, refer to Table 38-24 (Combination of UL/DL field, PPDU Type And Compression Mode field and B2 of U-SIG-2).
	B2-B12	STA-ID	11	Set to the TXVECTOR parameter STA_ID(#9774) (see 37.13.1.1 (STA_ID))(#11554).
	B13–B15	ELR Validate	3	Set to a value of 7. Values 0-6 are Validate.
	B16–B19	CRC	4	CRC for bits 0–41 of the U-SIG field. Bits 0–41 of the U-SIG field correspond to bits 0–25 of the U-SIG-1 field followed by bits 0–15 of the U-SIG-2 field. The CRC computation uses the same polynomial as that in 27.3.11.7.3 (CRC computation).
	B20–B25	Tail	6	Used to terminate the trellis of the convolutional decoder. Set to 0.

38.3.15.7.3 Encoding and modulation

For a UHR MU PPDU, UHR TB PPDU or UHR ELR PPDU, the U-SIG field shall use the same encoding and modulation process as that of the U-SIG field in an EHT MU PPDU or(#11555) EHT TB PPDU, as described in 36.3.12.7.3 (Encoding and modulation).

The time domain waveform for the U-SIG field of a UHR MU PPDU and a UHR TB PPDU, transmitted on transmit chain i_{TX}, shall be as specified in Equations (36-20) and (36-21), respectively, where the parameters $\Delta_{F,\text{Pre-EHT}}$ and $T_{GI,\text{Pre-EHT}}$(#9775) in both equations and $\eta_{\text{Pre-EHT}}$ in Equation (36-21) shall be replaced by their UHR counterparts, $\Delta_{F,\text{Pre-UHR}}$, $T_{GI,\text{Pre-EHT}}$(#9775) and $\eta_{\text{U-SIG}}$, respectively, where these parameters are defined in 38.3.14.4 (Transmitted signal) and in particular, $\eta_{\text{U-SIG}}$ is defined in Equation (38-4) and(#11556) Equation (38-5).

Copyright © 2025 IEEE. All rights reserved.
This is an unapproved IEEE Standards Draft, subject to change.

Compared to the U-SIG field of a UHR MU PPDU, the U-SIG field in a UHR ELR PPDU has only one 20 MHz subchannel. For the U-SIG field in a UHR ELR PPDU, the BPSK constellation point assigned to the *k*-th data subcarrier of the *n*-th symbol is denoted as $d_{k,n}$. The time domain waveform for the U-SIG field of a UHR ELR PPDU, transmitted on transmit chain i_{TX}, shall be as specified in Equation (38-11), which is the same as that of a UHR MU PPDU except that it has only one 20 MHz subchannel(#9167).

$$r_{\text{U-SIG}}^{i_{TX}}(t) = \tag{38-11}$$

$$\frac{1}{\sqrt{N_{TX} \cdot N_{\text{U-SIG}}^{\text{Tone}}}} \sum_{n=0}^{1} w_{T_{SYML}}(t - nT_{SYML}) \sum_{k=-28}^{28}$$

$$(\gamma_{k,20}(D_{k,n} + p_{n+2}P_k)\exp(j2\pi k\Delta_{F,\text{Pre-UHR}}(t - nT_{SYML} - T_{GI,\text{Pre-UHR}} - T_{CS}^{i_{TX}})))$$

(#8802)where

$\gamma_{k,20}$ is defined as in 21.3.7.5 (Definition of tone rotation).

$$D_{k,n} = \begin{cases} 0, & k = 0, \pm 7, \pm 21 \\ d_{M_{20}(k),n}, & \text{otherwise} \end{cases}$$ (#4046)

$$M_{20}(k) = \begin{cases} k+28, & -28 \le k \le -22 \\ k+27, & -20 \le k \le -8 \\ k+26, & -6 \le k \le -1 \\ k+25, & 1 \le k \le 6 \\ k+24, & 8 \le k \le 20 \\ k+23, & 22 \le k \le 28 \end{cases}$$

P_k and p_n are defined in 17.3.5.10 (OFDM modulation).

Other variables in Equation (38-11) are defined in 38.3.13 (Timing-related parameters) and 38.3.14 (Mathematical description of signals).

38.3.15.8 ELR-MARK field(#9776)

38.3.15.8.1 General

The ELR-MARK field in the ELR preamble provides additional signaling to distinguish a UHR ELR PPDU from other PPDUs. It helps to improve the detection by utilizing predefined tone patterns for cross-correlation, enhancing performance in low-SNR environments, and enabling coherent combining across multiple receiving antennas.

Additionally, the ELR-MARK field includes a unique identifier BSS_COLOR, indicating the STA's BSS color. The value of BSS_COLOR ranges from 1 to 63 (see (#11607, Ed)37.10.2 (Enhanced long range (ELR) operation)). A 64 × 96 matrix Ḧ, called ELR-MARK matrix, specifies 64 orthogonal sequences. Each row corresponds to a BSS (#10314)color, while each column corresponds to the data conveyed over each subcarrier of the two ELR-MARK symbols. These orthogonal sequences allow STAs to determine if the UHR ELR PPDU is from an(#8805) OBSS. The first row of the ELR-MARK matrix is reserved and shall not be used in the ELR-MARK field as BSS_COLOR=0 is disallowed for UHR(#6239) ELR PPDUs.

Copyright © 2025 IEEE. All rights reserved.
This is an unapproved IEEE Standards Draft, subject to change.

38.3.15.8.2 ELR-MARK Matrix

The 64x96 matrix $\ddot{\mathbf{H}}$, is derived from a compact orthogonal matrix $\dot{\mathrm{H}}$ of size 32x48, based on the mapping described by Equation (38-12),

$$\ddot{\boldsymbol{H}} = \begin{pmatrix} \dot{\boldsymbol{H}} & \dot{\boldsymbol{H}}\boldsymbol{J} \\ \dot{\boldsymbol{H}} & -\dot{\boldsymbol{H}}\boldsymbol{J} \end{pmatrix} \tag{38-12}$$

where the matrix $\boldsymbol{J}$ is the exchange matrix of order 48 given by Equation (38-13),

$$\boldsymbol{J} = \begin{bmatrix} 0 & 0 & \dots & 0 & 1 \\ 0 & 0 & \ddots & 1 & 0 \\ \vdots & \ddots & \ddots & \ddots & \vdots \\ 0 & 1 & \ddots & 0 & 0 \\ 1 & 0 & \dots & 0 & 0 \end{bmatrix} \tag{38-13}$$

and the matrix $\dot{\mathbf{H}}$ is specified as,

Copyright © 2025 IEEE. All rights reserved.
This is an unapproved IEEE Standards Draft, subject to change.

(38- 14)

$\dot{\mathbf{H}}$ = [

-1,-1,-1,-1,1,-1,-1,-1,-1,1,1,-1,1,-1,1,-1,-1,-1,1,1,-1,1,1,-1,-1,1,-1,-1,1,1,1,-1,1,-1,1,-1,-1,1,1,1,1,-1,1,1,1,1,1,-1
1,-1,-1,-1,-1,1,1,-1,1,-1,1,-1,-1,-1,1,1,-1,1,1,-1,-1,1,-1,-1,1,1,1,-1,1,-1,1,-1,-1,1,1,1,1,-1,1,1,1,1,1,-1,-1,-1,-1,-1
-1,-1,-1,-1,1,1,-1,1,-1,1,-1,-1,-1,1,1,-1,1,1,1,-1,-1,1,-1,-1,1,1,1,-1,1,-1,1,-1,-1,1,1,1,1,-1,1,1,1,1,1,-1,-1,-1,-1,1,-1
-1,-1,-1,1,1,-1,1,-1,1,-1,-1,-1,1,1,-1,1,1,-1,-1,1,-1,-1,1,1,1,-1,1,-1,1,-1,-1,1,1,1,1,-1,1,1,1,1,1,-1,-1,-1,1,1,-1,-1
-1,-1,1,1,-1,1,1,-1,1,-1,-1,-1,1,1,-1,1,1,-1,-1,1,-1,-1,1,1,1,-1,1,-1,1,-1,-1,1,1,1,1,-1,1,1,1,1,1,-1,-1,-1,1,1,-1,-1
-1,1,1,-1,1,-1,-1,1,-1,-1,-1,1,1,-1,1,1,-1,1,-1,1,-1,-1,1,1,1,-1,1,-1,1,-1,-1,1,1,1,1,-1,1,1,1,1,1,-1,-1,-1,1,1,-1,-1
1,1,-1,1,-1,1,-1,-1,-1,1,1,-1,1,1,-1,-1,1,-1,-1,1,1,1,-1,1,-1,1,-1,-1,1,1,1,1,-1,1,1,1,1,1,-1,-1,-1,1,1,-1,-1,-1,-1,1
1,-1,1,-1,1,-1,-1,-1,1,1,-1,1,1,-1,-1,1,-1,1,1,1,-1,1,-1,1,-1,-1,1,1,1,1,-1,1,1,1,1,1,-1,-1,-1,1,1,-1,-1,-1,1,1,-1,-1
1,-1,1,-1,-1,-1,1,1,-1,1,1,1,-1,-1,1,-1,-1,1,1,1,-1,1,-1,1,-1,-1,1,1,1,1,-1,1,1,1,1,1,-1,-1,-1,1,1,-1,-1,-1,1,1,-1,-1
-1,1,-1,-1,-1,1,1,-1,1,1,-1,-1,1,-1,-1,1,1,1,-1,1,-1,1,-1,-1,1,1,1,1,-1,1,1,1,1,1,-1,-1,-1,1,1,-1,-1,-1,1,1,-1,1,-1
1,-1,-1,-1,1,1,-1,1,1,-1,-1,1,-1,-1,1,1,1,-1,1,-1,1,-1,-1,1,1,1,1,-1,1,1,1,1,1,-1,-1,-1,1,1,-1,-1,-1,1,1,-1,1,-1,-1
-1,-1,-1,1,1,-1,1,1,1,-1,-1,1,-1,-1,1,1,1,-1,1,-1,1,-1,-1,1,1,1,1,-1,1,1,1,1,1,-1,-1,-1,1,1,-1,-1,-1,1,1,-1,1,-1,-1
-1,-1,1,1,-1,1,1,1,-1,1,-1,-1,1,1,1,-1,1,-1,1,-1,-1,1,1,1,1,-1,1,1,1,1,1,-1,-1,-1,1,1,-1,-1,-1,1,1,-1,1,-1,1,-1,-1
-1,1,1,-1,1,1,-1,-1,1,-1,-1,1,1,1,-1,1,-1,1,-1,-1,1,1,1,1,-1,1,1,1,1,1,-1,-1,-1,1,1,-1,-1,-1,1,1,-1,1,-1,-1,-1,-1,1
1,-1,-1,1,1,1,-1,1,-1,1,-1,-1,1,1,1,-1,1,1,1,1,-1,-1,-1,-1,1,-1,-1,-1,1,1,-1,1,-1,1,-1,-1,1,1,-1,1,-1,-1,1,1,-1,1,-1
-1,-1,1,1,1,-1,1,-1,1,-1,-1,1,1,1,1,-1,1,1,1,1,-1,-1,-1,-1,1,-1,-1,-1,1,1,-1,1,-1,1,-1,-1,1,1,-1,1,-1,-1,1,1,-1,1,-1
-1,1,1,-1,1,-1,1,-1,-1,1,1,1,1,-1,1,1,1,1,1,-1,-1,-1,-1,1,-1,-1,-1,1,1,-1,1,-1,1,-1,-1,1,1,-1,1,-1,-1,1,1,-1,1,-1
1,1,1,-1,1,-1,1,-1,-1,1,1,1,1,-1,1,1,1,1,1,-1,-1,-1,-1,1,-1,-1,-1,1,1,-1,1,-1,1,-1,-1,1,1,-1,1,-1,-1,1,1,-1,1,-1
1,1,-1,1,-1,1,-1,-1,1,1,1,1,-1,1,1,1,1,1,-1,-1,-1,-1,1,-1,-1,-1,1,1,-1,1,-1,1,-1,-1,1,1,-1,1,-1,-1,1,1,-1,1,-1
1,-1,1,-1,1,-1,-1,1,1,1,1,-1,1,1,1,1,1,-1,-1,-1,-1,1,-1,-1,-1,1,1,-1,1,-1,1,-1,-1,1,1,-1,1,-1,-1,1,1,-1,1,-1
-1,1,-1,1,-1,-1,1,1,1,1,-1,1,1,1,1,1,-1,-1,-1,-1,1,-1,-1,-1,1,1,-1,1,-1,1,-1,-1,1,1,-1,1,-1,-1,1,1,-1,1,-1
1,-1,1,-1,-1,1,1,1,1,-1,1,1,1,1,1,-1,-1,-1,-1,1,-1,-1,-1,1,1,-1,1,-1,1,-1,-1,1,1,-1,1,-1,-1,1,1,-1,1,-1
-1,-1,1,1,1,1,-1,1,1,1,1,-1,-1,-1,-1,1,-1,-1,-1,1,1,-1,1,-1,1,-1,-1,1,1,-1,1,-1,1,-1,-1,1,1,-1,1,-1,-1,1,1,-1,1,-1
-1,1,1,1,1,-1,1,1,1,1,-1,-1,-1,-1,1,-1,-1,-1,1,1,-1,1,-1,1,-1,-1,1,1,-1,1,-1,1,-1,-1,1,1,-1,1,-1,-1,1,1,-1,1,-1
1,1,1,1,-1,1,1,1,1,1,-1,-1,-1,-1,1,-1,-1,-1,1,1,-1,1,-1,1,-1,-1,1,1,-1,1,-1,1,-1,-1,1,1,-1,1,-1,-1,1,1,-1,1,-1
1,1,1,-1,1,1,1,1,1,-1,-1,-1,-1,1,-1,-1,-1,1,1,-1,1,-1,1,-1,-1,1,1,-1,1,-1,1,-1,-1,1,1,-1,1,-1,-1,1,1,-1,1,-1
1,-1,1,1,1,1,1,-1,-1,-1,-1,1,-1,-1,-1,1,1,-1,1,-1,1,-1,-1,1,1,-1,1,-1,1,-1,-1,1,1,-1,1,-1,-1,1,1,-1,1,-1,-1,1,1,-1,1,-1
1,1,1,-1,1,1,1,1,1,-1,-1,-1,-1,1,-1,-1,-1,1,1,-1,1,-1,1,-1,-1,1,1,-1,1,-1,1,-1,-1,1,1,-1,1,-1,-1,1,1,-1,1,-1
1,-1,1,1,1,1,1,-1,-1,-1,-1,1,-1,-1,-1,1,1,-1,1,-1,1,-1,-1,1,1,-1,1,-1,1,-1,-1,1,1,-1,1,-1,-1,1,1,-1,1,-1,-1,1,1,-1,1,-1
1,1,1,1,-1,1,1,1,1,1,-1,-1,-1,-1,1,-1,-1,-1,1,1,-1,1,-1,1,-1,-1,1,1,-1,1,-1,1,-1,-1,1,1,-1,1,-1,-1,1,1,-1,1,-1
1,1,1,-1,1,1,1,1,1,-1,-1,-1,-1,1,-1,-1,-1,1,1,-1,1,-1,1,-1,-1,1,1,-1,1,-1,1,-1,-1,1,1,-1,1,-1,-1,1,1,-1,1,-1
1,-1,1,1,1,1,1,-1,-1,-1,-1,1,-1,-1,-1,1,1,-1,1,-1,1,-1,-1,1,1,-1,1,-1,1,-1,-1,1,1,-1,1,-1,-1,1,1,-1,1,-1,-1,1,1,-1,1,-1
1,1,1,-1,1,1,1,1,1,-1,-1,-1,-1,1,-1,-1,-1,1,1,-1,1,-1,1,-1,-1,1,1,-1,1,-1,1,-1,-1,1,1,-1,1,-1,-1,1,1,-1,1,-1
1,-1,1,1,1,1,1,-1,-1,-1,-1,1,-1,-1,-1,1,1,-1,1,-1,1,-1,-1,1,1,-1,1,-1,1,-1,-1,1,1,-1,1,-1,-1,1,1,-1,1,-1,-1,1,1,-1,1,-1
1,1,1,-1,1,1,1,1,1,-1,-1,-1,-1,1,-1,-1,-1,1,1,-1,1,-1,1,-1,-1,1,1,-1,1,-1,1,-1,-1,1,1,-1,1,-1,-1,1,1,-1,1,-1
1,-1,1,1,1,1,1,-1,-1,-1,-1,1,-1,-1,-1,1,1,-1,1,-1,1,-1,-1,1,1,-1,1,-1,1,-1,-1,1,1,-1,1,-1,-1,1,1,-1,1,-1,-1,1,1,-1,1,-1
1,1,1,1,-1,1,1,1,1,1,-1,-1,-1,-1,1,-1,-1,-1,1,1,-1,1,-1,1,-1,-1,1,1,-1,1,-1,1,-1,-1,1,1,-1,1,-1,-1,1,1,-1,1,-1

].

The 32 x 48 matrix $\dot{\mathbf{H}}$ is also depicted in Figure 38-20 (The 32 x 48 ELR-MARK(#6242) sequence matrix $\dot{H}$) for visual clarity.

Copyright © 2025 IEEE. All rights reserved.
This is an unapproved IEEE Standards Draft, subject to change.

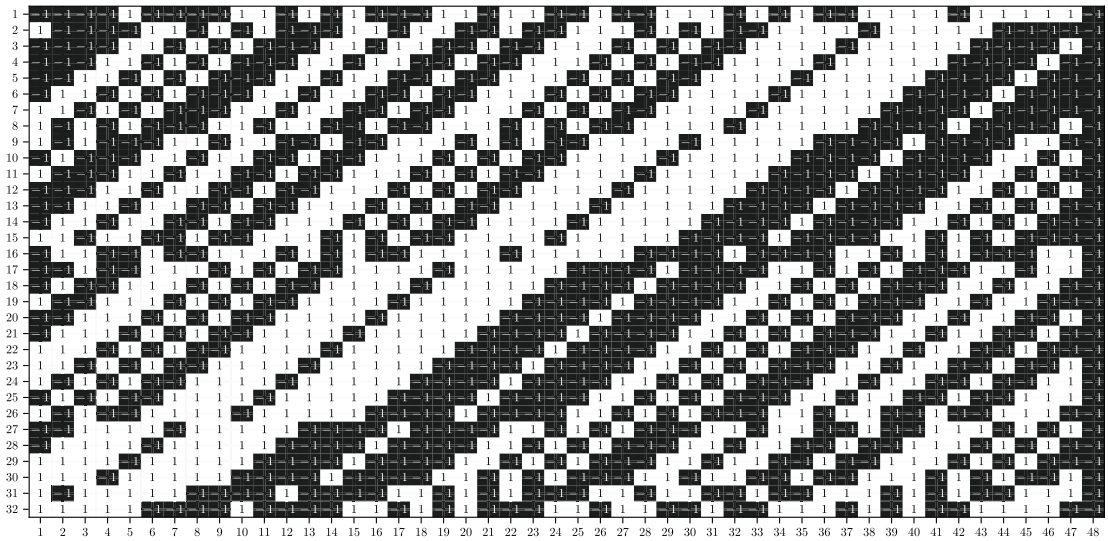

Figure 38-20—The 32 x 48 ELR-MARK(#6242) sequence matrix Ḣ

A graphical representation of the complete 64x96 matrix **Ḧ** is shown in Figure 38-21 (Graphical view of the complete 64x96 matrix Ḧ corresponding to the ELR-MARK(#6245) symbols).

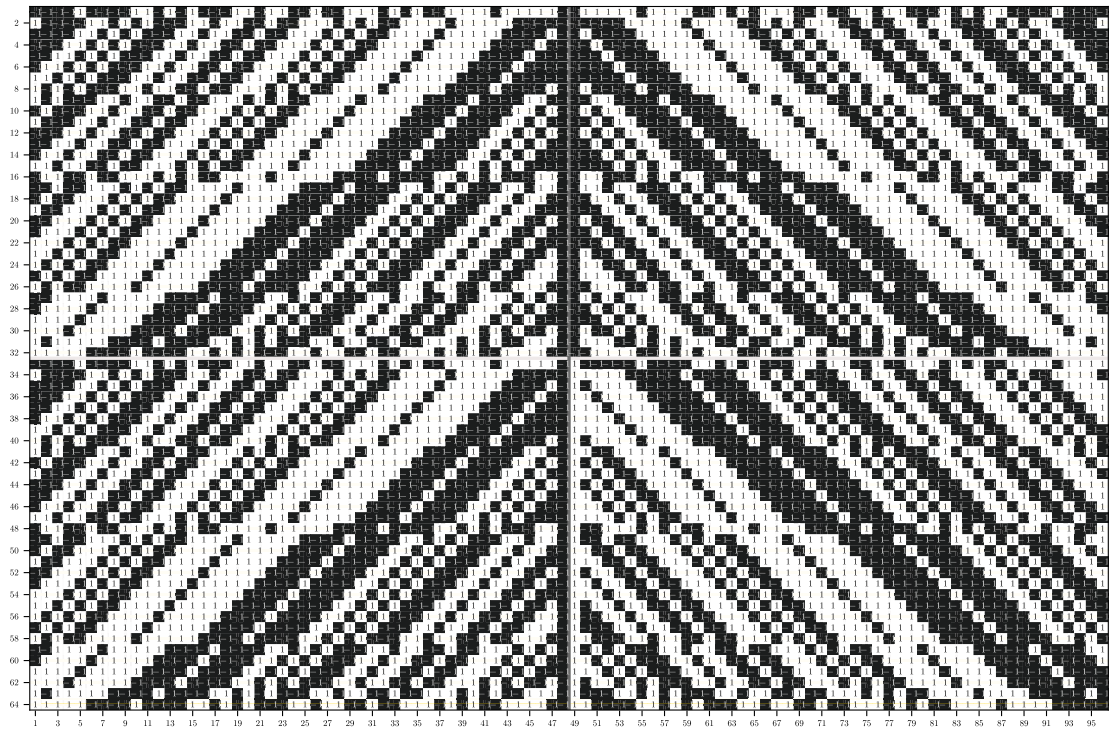

Figure 38-21—Graphical view of the complete 64x96 matrix Ḧ corresponding to the ELR-MARK(#6245) symbols

Copyright © 2025 IEEE. All rights reserved.
This is an unapproved IEEE Standards Draft, subject to change.

38.3.15.8.3 Encoding and Modulation

A row of the ELR-MARK matrix is chosen as the ELR-MARK sequence and is transmitted in the ELR-MARK field using QBPSK modulation to enhance detection performance and reduce the likelihood of missed or false detections. The ELR-MARK field comprises two OFDM symbols, referred to as ELR-MARK-1 and ELR-MARK-2. In the frequency domain, each OFDM symbol contains 52 tones: 48 data tones modulated using QBPSK and 4 pilot tones modulated using BPSK. The ELR-MARK symbols are generated as follows.

— For a given BSS_COLOR $b \in [1,63]$ (#6645, 9966), the sequence $\mathbf{M} = [\ddot{\mathbf{H}}]_{b+1,1:96}$ (the b+1 th row of the matrix Ḧ) is used for the ELR-MARK symbols. The sequence **M** containing 96 values (± 1) are individually translated to $\pm j$, using QBPSK mapping, i.e., $1 \rightarrow j$, $-1 \rightarrow -j$. This sequence **M** is split into two segments, each consisting(#9779) of length 48 elements.

— The first 48 elements of **M**, namely $\mathbf{M}_1 = \mathbf{M}[1{:}48]$, are allocated to the 48 data subcarriers of the first(#8807) OFDM symbol. Pilots with values [-1, -1, -1, 1] are mapped to subcarriers(#9780) [-21, -7, 7, 21]. This forms the frequency domain representation of the ELR-MARK-1 symbol. An (#9781)IDFT is then applied to generate the time domain version of the ELR-MARK-1 symbol.

— The last 48 elements of **M**, namely $\mathbf{M}_2 = \mathbf{M}[49{:}96]$, are assigned to the 48 data subcarriers of the second(#8808) OFDM symbol. Pilots with values [-1, -1, -1, 1] are mapped to subcarriers(#9780) [-21, -7, 7, 21]. This constitutes the frequency domain representation of the ELR-MARK-2 symbol. An (#9781)IDFT is subsequently applied to obtain the time domain version of the ELR-MARK-2 symbol.

— The mathematical representation of the time domain waveform for the ELR-MARK field, transmitted on transmit chain (#9782)i_{TX}, shall be as specified in Equation (38-15).

$$r_{\text{ELR-MARK}}^{i_{TX}}(t) = \tag{38-15}$$

$$\frac{1}{\sqrt{N_{TX} \cdot N_{\text{ELR-MARK}}^{\text{Tone}}}} \sum_{n=0}^{1} w_{T_{SYML}}(t - nT_{SYML}) \sum_{k=-26}^{26}$$

$$((D_{k,n} + p_{n+4}P_k)\exp(j2\pi k\Delta_{F,\text{Pre-UHR}}(t - nT_{SYML} - T_{GI,\text{Pre-UHR}} - T_{CS}^{i_{TX}})))$$

(#8809)where

$$D_{k,n} = \begin{cases} 0, & k = 0, \pm 7, \pm 21 \\ j[\ddot{H}]_{1+\text{BSS_COLOR},\, 48n+k+26-\text{ceil}\left(\frac{\text{sign}(k)-1}{2}+\frac{k+21}{14}\right)}, & \text{otherwise} \end{cases}$$

where $[\ddot{\mathbf{H}}]_{p,q}$ is the element of matrix $\ddot{\mathbf{H}}$ at row p and column q.

38.3.15.9 UHR-SIG

38.3.15.9.1 General

The UHR-SIG field provides additional signaling to the U-SIG field for STAs to interpret a UHR MU PPDU. In a UHR MU PPDU, the UHR-SIG field contains U-SIG overflow bits that are common to all users. The UHR-SIG field further contains resource allocation information to allow the STAs to look up the corresponding resources to be used in the UHR modulated fields of the PPDU. The integer fields of the UHR-SIG field are transmitted in unsigned binary format, LSB first, where the LSB is in the lowest numbered bit position.

Copyright © 2025 IEEE. All rights reserved.
This is an unapproved IEEE Standards Draft, subject to change.

For a DL non-OFDMA Co-BF transmission, the UHR-SIG field carries information for the corresponding two Co-BF BSSs

38.3.15.9.2 UHR-SIG content channels

The UHR-SIG field of a 20 MHz UHR MU PPDU contains one UHR-SIG content channel. For OFDMA transmission, DL non-OFDMA MU-MIMO transmission, and DL non-OFDMA Co-BF transmission, the UHR-SIG field of a UHR MU PPDU that is 40 MHz or 80 MHz contains two UHR-SIG content channels. For OFDMA transmission, DL non-OFDMA MU-MIMO transmission, and DL non-OFDMA Co-BF transmission, the UHR-SIG field of a UHR MU PPDU that is 160 MHz or wider contains two UHR-SIG content channels per 80 MHz frequency subblock. The UHR-SIG content channels per 80 MHz frequency subblock are allowed to carry different information when UHR MU PPDU bandwidth for OFDMA transmission is wider than 80 MHz. The UHR-SIG field of a UHR SU transmission and DL SU Co-SR transmission contains one UHR-SIG content channel and it is duplicated in each non-punctured 20 MHz subchannel when the UHR PPDU is equal to or wider than 40 MHz.

For a DL non-OFDMA Co-BF transmission, the above one content channel in a 20 MHz UHR MU PPDU and two content channels in a UHR MU PPDU with a wider bandwidth of the UHR-SIG field carry information for the corresponding two Co-BF BSSs.

The figures of content channel formats described in EHT-SIG also apply to UHR-SIG (See 36.3.12.8.2 (EHT-SIG content channels)). Note that there is no UHR sounding NDP. For a UHR MU PPDU, each UHR-SIG content channel consists of a Common field followed by a User Specific field.

Copyright © 2025 IEEE. All rights reserved.
This is an unapproved IEEE Standards Draft, subject to change.

38.3.15.9.3 Common field for OFDMA transmission

The Common field for OFDMA transmission is defined in Table 38-27 (Common field for OFDMA transmission).

Table 38-27—Common field for OFDMA transmission

Bit	Subfield	Number of subfields	Number of bits per subfield	Description
B0–B3	Spatial Reuse	1	4	Indicates whether or not spatial reuse modes are allowed during the transmission of this PPDU. Set to a value from Table 27-23 (Spatial Reuse field encoding for an HE SU PPDU, HE ER PPDU, and HE MU PPDU). Note that Table 27-23 (Spatial Reuse field encoding for an HE SU PPDU, HE ER PPDU, and HE MU PPDU) also applies to UHR MU PPDU. See 37.3 (UHR spatial(#7563) reuse operation).
B4–B5	GI+LTF Size	1	2	Indicates the GI duration and UHR-LTF size: Set to 0 to indicate 2× LTF + 0.8 µs GI. Set to 1 to indicate 2× LTF + 1.6 µs GI. Set to 2 to indicate 4× LTF + 0.8 µs GI. Set to 3 to indicate 4× LTF + 3.2 µs GI.
B6–B8	Number Of UHR-LTF Symbols	1	3	Indicate the number of UHR-LTF symbols: Set to 0 to indicate 1 UHR-LTF symbol. Set to 1 to indicate 2 UHR-LTF symbols. Set to 2 to indicate 4 UHR-LTF symbols. Set to 3 to indicate 6 UHR-LTF symbols. Set to 4 to indicate 8 UHR-LTF symbols. Values 5–7 are Validate.
B9	LDPC Extra Symbol Segment	1	1	Indicates the presence of the LDPC extra symbol segment: Set to 1 if an LDPC extra symbol segment is present. Set to 0 if an LDPC extra symbol segment is not present.
B10–B11	Pre-FEC Padding Factor	1	2	Indicates the pre-FEC padding factor: Set to 0 to indicate a pre-FEC padding factor of 4. Set to 1 to indicate a pre-FEC padding factor of 1. Set to 2 to indicate a pre-FEC padding factor of 2. Set to 3 to indicate a pre-FEC padding factor of 3.
B12	PE Disambiguity	1	1	Indicates PE disambiguity as defined in 38.3.17 (Packet extension).
B13–B16	Disregard	1	4	Set to all 1s.

Copyright © 2025 IEEE. All rights reserved.
This is an unapproved IEEE Standards Draft, subject to change.

Table 38-27—Common field for OFDMA transmission *(continued)*

Bit	Subfield	Number of subfields	Number of bits per subfield	Description
B17–B16+9*N*	RU Allocation-A	*N*	9	*N* RU Allocation-A subfields are present in a UHR-SIG content channel, where: *N* is set to 1 if the Bandwidth field in the U-SIG field is equal to 0 or 1. *N* is set to 2 if the Bandwidth field in the U-SIG field is equal to 2, 3, 4, or 5. Each RU Allocation-A subfield in a UHR-SIG content channel corresponding to a 20 MHz frequency subchannel indicates the RU or MRU assignment, including the size of the RU(s) or MRU(s) and their placement in the frequency domain, to be used in the UHR modulated fields of the UHR MU PPDU in the frequency domain, where the subcarrier indices of the RU(s) or MRU(s) meet the conditions in Table 36-35 (RUs or MRUs associated with each RU Allocation subfield for each EHT-SIG content channel and PPDU bandwidth). Each RU Allocation-A subfield also indicates information needed to compute the number of users allocated to each of these RU(s) or MRU(s).
B17+9*N* –B20+9*N*	CRC	1	4	The CRC is calculated over bits 0 to 16+9*N*. The CRC computation uses the same polynomial as that in 27.3.11.7.3 (CRC computation).
B21+9*N* –B26+9*N*	Tail	1	6	Used to terminate the trellis of the convolutional decoder. Set to 0.

Copyright © 2025 IEEE. All rights reserved.
This is an unapproved IEEE Standards Draft, subject to change.

Table 38-27—Common field for OFDMA transmission *(continued)*

Bit	Subfield	Number of subfields	Number of bits per subfield	Description
B27+9*N* – B26+9*N*+9*M*	RU Allocation-B	*M*	9	*M* RU Allocation-B subfields are present in a UHR-SIG content channel if the Bandwidth subfield in the U-SIG field is equal to 3 or 4 or 5 in a UHR MU PPDU where *M* is equal to 2 or 6 as follows: *M* is set to 2 if the Bandwidth field in the U-SIG field is 3. *M* is set to 6 if the Bandwidth field in the U-SIG field is 4 or 5. The subfields are not present otherwise (i.e., *M* is equal to 0). Each RU Allocation-B subfield in a UHR-SIG content channel corresponding to a 20 MHz frequency subchannel indicates the RU or MRU assignment, including the size of the RU(s) or MRU(s) and their placement in the frequency domain, to be used in the UHR modulated fields of the UHR MU PPDU in the frequency domain, where the subcarrier indices of the RU(s) or MRU(s) meet the conditions in Table 36-35 (RUs or MRUs associated with each RU Allocation subfield for each EHT-SIG content channel and PPDU bandwidth). Each RU Allocation-B subfield also indicates information needed to compute the number of users allocated to each of these RU(s) or MRU(s).
B27+9*N*+9*M* – B30+9*N*+9*M*	CRC	0 or 1	4	The CRC subfield is present if the Bandwidth subfield in the U-SIG field indicates a 160 MHz, 320 MHz-1, or 320 MHz-2 UHR MU PPDU and not present otherwise. If present, the CRC is calculated over bits 27+9*N* to 26+9*N*+9*M*. The CRC computation uses the same polynomial as that in 27.3.11.7.3 (CRC computation). NOTE—*N*=2 when the CRC subfield exists.
B31+9*N*+9*M* – B36+9*N*+9*M*	Tail	0 or 1	6	The Tail subfield is present if the Bandwidth subfield in the U-SIG field indicates a 160 MHz, 320 MHz-1, or 320 MHz-2 UHR MU PPDU and not present otherwise. If present, then it is used to terminate the trellis of the convolutional decoder. Set to 0. NOTE—*N*=2 when the Tail subfield exists.

B0–B16 of Table 38-27 (Common field for OFDMA transmission) are U-SIG Overflow bits for OFDMA transmission and are duplicated in each content channel.

Copyright © 2025 IEEE. All rights reserved.
This is an unapproved IEEE Standards Draft, subject to change.

Both RU Allocation-A subfield and RU Allocation-B subfield refer to an RU Allocation subfield, located in different common encoding blocks.

The mapping from the 9-bit RU Allocation subfield to the RU assignment and the number of User fields per RU or MRU contribute to the User Specific field in the same UHR-SIG content channel as the RU Allocation subfield is defined in Table 38-28 (RU Allocation subfield).

Table 38-28—RU Allocation subfield

RU Allocation subfield (B8 B7 B6 B5 B4 B3 B2 B1 B0)	1	2	3	4	5	6	7	8	9	Number of entries
0 (000000000)	26	26	26	26	26	26	26	26	26	1
1 (000000001)	26	26	26	26	26	26	26	52		1
2 (000000010)	26	26	26	26	26	52		26	26	1
3 (000000011)	26	26	26	26	26	52		52		1
4 (000000100)	26	26	52		26	26	26	26	26	1
5 (000000101)	26	26	52		26	26	26	52		1
6 (000000110)	26	26	52		26	52		26	26	1
7 (000000111)	26	26	52		26	52		52		1
8 (000001000)	52		26	26	26	26	26	26	26	1
9 (000001001)	52		26	26	26	26	26	52		1
10 (000001010)	52		26	26	26	52		26	26	1
11 (000001011)	52		26	26	26	52		52		1
12 (000001100)	52		52		26	26	26	26	26	1
13 (000001101)	52		52		26	26	26	52		1
14 (000001110)	52		52		26	52		26	26	1
15 (000001111)	52		52		26	52		52		1
16 (000010000)	26	26	26	26	26	106				1
17 (000010001)	26	26	52		26	106				1
18 (000010010)	52		26	26	26	106				1
19 (000010011)	52		52		26	106				1
20 (000010100)	106				26	26	26	26	26	1
21 (000010101)	106				26	26	26	52		1
22 (000010110)	106				26	52		26	26	1
23 (000010111)	106				26	52		52		1
24 (000011000)	52		52		—	52		52		1
25 (000011001)	106				26	106				1
26 (000011010)	Punctured 242-tone RU									1

Copyright © 2025 IEEE. All rights reserved.
This is an unapproved IEEE Standards Draft, subject to change.

Table 38-28—RU Allocation subfield *(continued)*

RU Allocation subfield (B8 B7 B6 B5 B4 B3 B2 B1 B0)	1	2	3	4	5	6	7	8	9	Number of entries
27 (000011011)	Unassigned 242-tone RU									1
28 (000011100)	242-tone RU; allocated but contributes zero User fields to the User Specific field in the same UHR-SIG content channel as this RU Allocation subfield.									1
29 (000011101)	484-tone RU; allocated but contributes zero User fields to the User Specific field in the same UHR-SIG content channel as this RU Allocation subfield.									1
30 (000011110)	996-tone RU; allocated but contributes zero User fields to the User Specific field in the same UHR-SIG content channel as this RU Allocation subfield.									1
31 (000011111)	Validate									1
32 (000100000)	26	26	26	26	26	52+26			26	1
33 (000100001)	26	26	52		26	52+26			26	1
34 (000100010)	52		26	26	26	52+26			26	1
35 (000100011)	52		52		26	52+26			26	1
36 (000100100)	26	52+26			26	26	26	26	26	1
37 (000100101)	26	52+26			26	26	26	52		1
38 (000100110)	26	52+26			26	52		26	26	1
39 (000100111)	26	52+26			26	52		52		1
40 (000101000)	26	26	26	26	106+26					1
41 (000101001)	26	26	52		106+26					1
42 (000101010)	52		26	26	106+26					1
43 (000101011)	52		52		106+26					1
44 (000101100)	106+26					26	26	26	26	1
45 (000101101)	106+26					26	26	52		1
46 (000101110)	106+26					52		26	26	1
47 (000101111)	106+26					52		52		1
48 (000110000)	106+26					106				1
49 (000110001)	106+26					52+26			26	1
50 (000110010)	106				106+26					1
51 (000110011)	26	52+26			106+26					1
52 (000110100)	106				26	52+26			26	1
53 (000110101)	26	52+26			26	106				1
54 (000110110)	26	52+26			26	52+26			26	1
55 (000110111)	52		52+26			52		52		1

Copyright © 2025 IEEE. All rights reserved.
This is an unapproved IEEE Standards Draft, subject to change.

Table 38-28—RU Allocation subfield *(continued)*

RU Allocation subfield (B8 B7 B6 B5 B4 B3 B2 B1 B0)	1	2	3	4	5	6	7	8	9	Number of entries
56–63 (000111000–000111111)	Validate									8
64 (001000000)	242									1
65–71 (001000001-001000111)	Validate									7
72 (001001000)	484									1
73–79 (001001001-001001111)	Validate									7
80–87 (001010$y_2y_1y_0$)	996									8
88–95 (001011$y_2y_1y_0$)	2×996									8
96–103 (001100$y_2y_1y_0$)	MRU of pattern [gap-242]-242-484, specifically 484+242-tone MRU-1, 5, 9, and 13 within the first, second, third, and fourth 80 MHz frequency subblock in increasing frequency order, respectively									8
104–111 (001101$y_2y_1y_0$)	MRU of pattern 242-[gap-242]-484, specifically 484+242-tone MRU-2, 6, 10, and 14 within the first, second, third, and fourth 80 MHz frequency subblock in increasing frequency order, respectively									8
112–119 (001110$y_2y_1y_0$)	MRU of pattern 484-[gap-242]-242, specifically 484+242-tone MRU-3, 7, 11, and 15 within the first, second, third, and fourth 80 MHz frequency subblock in increasing frequency order, respectively									8
120–127 (001111$y_2y_1y_0$)	MRU of pattern 484-242-[gap-242], specifically 484+242-tone MRU-4, 8, 12, and 16 within the first, second, third, and fourth 80 MHz frequency subblock in increasing frequency order, respectively									8
128–135 (010000$y_2y_1y_0$)	MRU of pattern [gap-484]-484-996, specifically 996+484-tone MRU-1 and 5 within the first and second 160 MHz subblock in increasing frequency order, respectively									8
136–143 (010001$y_2y_1y_0$)	MRU of pattern 484-[gap-484]-996, specifically 996+484-tone MRU-2 and 6 within the first and second 160 MHz subblock in increasing frequency order, respectively									8
144–151 (010010$y_2y_1y_0$)	MRU of pattern 996-[gap-484]-484, specifically 996+484-tone MRU-3 and 7 within the first and second 160 MHz subblock in increasing frequency order, respectively									8
152–159 (010011$y_2y_1y_0$)	MRU of pattern 996-484-[gap-484], specifically 996+484-tone MRU-4 and 8 within the first and second 160 MHz subblock in increasing frequency order, respectively									8
160–167 (010100$y_2y_1y_0$)	MRU of pattern [gap-996]-996-996-996, specifically 3×996-tone MRU-1									8
168–175 (010101$y_2y_1y_0$)	MRU of pattern 996-[gap-996]-996-996, specifically 3×996-tone MRU-2									8
176–183 (010110$y_2y_1y_0$)	MRU of pattern 996-996-[gap-996]-996, specifically 3×996-tone MRU-3									8
184–191 (010111$y_2y_1y_0$)	MRU of pattern 996-996-996-[gap-996], specifically 3×996-tone MRU-4									8

Copyright © 2025 IEEE. All rights reserved.
This is an unapproved IEEE Standards Draft, subject to change.

Table 38-28—RU Allocation subfield *(continued)*

RU Allocation subfield (B8 B7 B6 B5 B4 B3 B2 B1 B0)	1	2	3	4	5	6	7	8	9	Number of entries
192 (011000000)	MRU of pattern [gap-484]-484-996-996-996, specifically 3×996+484-tone MRU-1									1
193–199 (011000001-011000111)	Validate									7
200 (011001000)	MRU of pattern 484-[gap-484]-996-996-996, specifically 3×996+484-tone MRU-2									1
201–207 (011001001-011001111)	Validate									7
208 (011010000)	MRU of pattern 996-[gap-484]-484-996-996, specifically 3×996+484-tone MRU-3									1
209–215 (011010001-011010111)	Validate									7
216 (011011000)	MRU of pattern 996-484-[gap-484]-996-996, specifically 3×996+484-tone MRU-4									1
217-223 (011011001-011011111)	Validate									7
224 (011100000)	MRU of pattern 996-996-[gap-484]-484-996, specifically 3×996+484-tone MRU-5									1
225-231 (011100001-011100111)	Validate									7
232 (011101000)	MRU of pattern 996-996-484-[gap-484]-996, specifically 3×996+484-tone MRU-6									1
233-239 (011101001-011101111)	Validate									7
240 (011110000)	MRU of pattern 996-996-996-[gap-484]-484, specifically 3×996+484-tone MRU-7									1
241-247 (011110001-011110111)	Validate									7
248 (011111000)	MRU of pattern 996-996-996-484-[gap-484], specifically 3×996+484-tone MRU-8									1
249-255 (011111001-011111111)	Validate									7
256–263 (100000$y_2y_1y_0$)	MRU of pattern [gap-484]-484-996-996, specifically 2×996+484-tone MRU-1 and 7 within the 240 MHz subblock composed of the first, second, and third 80 MHz frequency subblock and the 240 MHz subblock composed of the second, third, and fourth 80 MHz frequency subblock in increasing frequency order, respectively									8
264–271 (100001$y_2y_1y_0$)	MRU of pattern 484-[gap-484]-996-996, specifically 2×996+484-tone MRU-2 and 8 within the 240 MHz subblock composed of the first, second, and third 80 MHz frequency subblock and the 240 MHz subblock composed of the second, third, and fourth 80 MHz frequency subblock in increasing frequency order, respectively									8

Copyright © 2025 IEEE. All rights reserved.
This is an unapproved IEEE Standards Draft, subject to change.

Table 38-28—RU Allocation subfield *(continued)*

RU Allocation subfield (B8 B7 B6 B5 B4 B3 B2 B1 B0)	1	2	3	4	5	6	7	8	9	Number of entries
272–279 ($100010y_2y_1y_0$)	MRU of pattern 996-[gap-484]-484-996, specifically 2×996+484-tone MRU-3 and 9 within the 240 MHz subblock composed of the first, second, and third 80 MHz frequency subblock and the 240 MHz subblock composed of the second, third, and fourth 80 MHz frequency subblock in increasing frequency order, respectively									8
280–287 ($100011y_2y_1y_0$)	MRU of pattern 996-484-[gap-484]-996, specifically 2×996+484-tone MRU-4 and 10 within the 240 MHz subblock composed of the first, second, and third 80 MHz frequency subblock and the 240 MHz subblock composed of the second, third, and fourth 80 MHz frequency subblock in increasing frequency order, respectively									8
288–295 ($100100y_2y_1y_0$)	MRU of pattern 996-996-[gap-484]-484, specifically 2×996+484-tone MRU-5 and 11 within the 240 MHz subblock composed of the first, second, and third 80 MHz frequency subblock and the 240 MHz subblock composed of the second, third, and fourth 80 MHz frequency subblock in increasing frequency order, respectively									8
296–303 ($100101y_2y_1y_0$)	MRU of pattern 996-996-484-[gap-484], specifically 2×996+484-tone MRU-6 and 12 within the 240 MHz subblock composed of the first, second, and third 80 MHz frequency subblock and the 240 MHz subblock composed of the second, third, and fourth 80 MHz frequency subblock in increasing frequency order, respectively									8
304–511 ($100110y_2y_1y_0$–$111111y_2y_1y_0$)	Disregard									26×8

For an RU Allocation subfield with value greater than or equal to 64 that includes $y_2y_1y_0$, $y_2y_1y_0$ = 000–111 indicates the number of User fields in the UHR-SIG content channel that contains the corresponding 9-bit RU Allocation subfield. The binary vector $y_2y_1y_0$ indicates $N_{user}(r, c) = 2^2 \times y_2 + 2^1 \times y_1 + y_0 + 1$ User fields in the UHR-SIG content channel that contains the corresponding 9-bit RU Allocation subfield.

[Gap-242/484/996] indicates a 242/484/996-tone RU that is not overlapped with the RU or MRU indicated by the 9-bit RU Allocation subfield and is to help indicate the frequency order of the MRU within an 80/160/240/320 MHz subblock.

The MU-MIMO allocation is allowed for the RUs and MRUs sizes larger than or equal to 996 tones in an OFDMA transmission.

The maximum number of RUs or MRUs with MU-MIMO allocation in an OFDMA transmission is 2.

The MU-MIMO allocation of 996-tone RU and punctured 484+242-tone MRU is allowed in an OFDMA transmission only when the bandwidth of the PPDU is 160 MHz.

The MU-MIMO allocation of 2x996-tone RU, punctured 996+484-tone MRU, punctured 2x996+484-tone MRU, and punctured 3x996-tone MRU is allowed in an OFDMA transmission only when the bandwidth of the PPDU is 320 MHz.

For an MU-MIMO allocation of RU and MRU sizes as defined in 38.3.15.9.3 (Common field for OFDMA transmission) in an OFDMA transmission, the dynamic split of User fields between UHR-SIG content channel 1 and UHR-SIG content channel 2 is decided by the AP (on a per case basis) and signalled by the AP using the RU Allocation subfields in each UHR-SIG content channel. The dynamic split of User fields

Copyright © 2025 IEEE. All rights reserved.
This is an unapproved IEEE Standards Draft, subject to change.

can be different in each 80 MHz frequency subblock if the bandwidth of the PPDU is greater than or equal to 160 MHz.

38.3.15.9.4 Common field for non-OFDMA transmission

The Common field for a UHR SU transmission, DL SU Co-SR transmission, DL non-OFDMA MU-MIMO transmission, and DL non-OFDMA Co-BF transmission is defined in Table 38-29 (Common field for a UHR SU transmission, DL SU Co-SR transmission, DL non-OFDMA MU-MIMO transmission, and DL non-OFDMA Co-BF transmission).

Table 38-29—Common field for a UHR SU transmission, DL SU Co-SR transmission, DL non-OFDMA MU-MIMO transmission, and DL non-OFDMA Co-BF transmission

Bit	Subfield	Number of bits	Description
B0–B3	Spatial Reuse	4	Indicates whether or not spatial reuse modes are allowed during the transmission of this PPDU. Set to a value from Table 27-23 (Spatial Reuse field encoding for an HE SU PPDU, HE ER PPDU, and HE MU PPDU). Note that Table 27-23 (Spatial Reuse field encoding for an HE SU PPDU, HE ER PPDU, and HE MU PPDU) also applies to UHR MU PPDU.See 37.3 (UHR spatial(#7563) reuse operation). . The Spatial Reuse subfield is set to PSR_AND_NON_SRG_OBSS_PD_PROHIBITED in the DL SU Co-SR transmission and DL non-OFDMA Co-BF transmission.
B4–B5	GI+LTF Size	2	Indicates the GI duration and UHR-LTF size: Set to 0 to indicate 2× LTF + 0.8 µs GI. Set to 1 to indicate 2× LTF + 1.6 µs GI. Set to 2 to indicate 4× LTF + 0.8 µs GI. Set to 3 to indicate 4× LTF + 3.2 µs GI.
B6–B8	Number Of UHR-LTF Symbols	3	Indicate the number of UHR-LTF symbols: Set to 0 to indicate 1 UHR-LTF symbol. Set to 1 to indicate 2 UHR-LTF symbols. Set to 2 to indicate 4 UHR-LTF symbols. Set to 3 to indicate 6 UHR-LTF symbols. Set to 4 to indicate 8 UHR-LTF symbols. Values 5–7 are Validate.
B9	LDPC Extra Symbol Segment	1	Indicates the presence of the LDPC extra symbol segment: Set to 1 if an LDPC extra symbol segment is present. Set to 0 if an LDPC extra symbol segment is not present.

Copyright © 2025 IEEE. All rights reserved.
This is an unapproved IEEE Standards Draft, subject to change.

Table 38-29—Common field for a UHR SU transmission, DL SU Co-SR transmission, DL non-OFDMA MU-MIMO transmission, and DL non-OFDMA Co-BF transmission *(continued)*

Bit	Subfield	Number of bits	Description
B10–B11	Pre-FEC Padding Factor	2	Indicates the pre-FEC padding factor: Set to 0 to indicate a pre-FEC padding factor of 4. Set to 1 to indicate a pre-FEC padding factor of 1. Set to 2 to indicate a pre-FEC padding factor of 2. Set to 3 to indicate a pre-FEC padding factor of 3.
B12	PE Disambiguity	1	Indicates PE disambiguity as defined in 38.3.17 (Packet extension).
B13	Interference Mitigation	1	Indicates whether IM is enabled or not in the Data field. A value of 0 indicates the PPDU is sent with IM enabled. A value of 1 indicates the PPDU is sent with IM disabled.
B14–B15	Disregard	2	Set to all 1s.
B16–B18	Number Of Non-OFDMA Users	3	Indicates the total number of non-OFDMA users. Set to *n* to indicate *n*+1 non-OFDMA users. For a non-OFDMA transmission to a single user, set to 0 to indicate a UHR SU transmission. For a non-OFDMA transmission to multiple users, set to a value larger than 0 to indicate more than one non-OFDMA users for non-OFDMA transmission to multiple users.

B0–B15 of Table 38-29 (Common field for a UHR SU transmission, DL SU Co-SR transmission, DL non-OFDMA MU-MIMO transmission, and DL non-OFDMA Co-BF transmission) are U-SIG Overflow bits for a UHR SU transmission, DL SU Co-SR transmission, DL non-OFDMA MU-MIMO transmission, and DL non-OFDMA Co-BF transmission. Both the U-SIG Overflow bits and Number Of Non-OFDMA Users subfields are duplicated in each content channel.

For a UHR SU transmission using BCC using BCC or a DL SU Co-SR transmission using BCC, the LDPC Extra Symbol Segment field is set to 0 to indicate that an LDPC extra symbol segment is not present.

For a DL non-OFDMA Co-BF transmission, the Common fields of the UHR-SIG sent from the coordinated AP and the coordinating AP are the same.

Copyright © 2025 IEEE. All rights reserved.
This is an unapproved IEEE Standards Draft, subject to change.

38.3.15.9.5 User Specific field

The User Specific field of a UHR-SIG content channel consists of zero or more user encoding blocks followed by padding (if present). The figures of User Specific field described in EHT-SIG also apply to UHR-SIG (See 36.3.12.8.2 (EHT-SIG content channels)). Note that there is no UHR sounding NDP. For a UHR MU PPDU, each UHR-SIG content channel consists of a Common field followed by a User Specific field.

For a DL OFDMA transmission (in the U-SIG field, the UL/DL field is set to 0, the PPDU Type And Compression Mode field is set to 0, and the Co-BF/Co-SR Indication field is set to 1), the number of User fields is indicated by the RU Allocation subfields. Each nonfinal user encoding block is made up of two User fields that contain information for two STAs that are used to decode their payloads. The final user encoding block contains information for one or two users depending on the number of User fields in the UHR-SIG content channel.

For a UHR SU transmission (in the U-SIG field, the UL/DL field is set to either 0 or 1, the PPDU Type And Compression Mode field is set to 1, and the Co-BF/Co-SR Indication field is set to 1), a DL SU Co-SR transmission (in the U-SIG field, the UL/DL field is set to 0, the PPDU Type And Compression Mode field is set to 1, and the Co-BF/Co-SR Indication field is set to 0), a DL non-OFDMA Co-BF transmission (in the U-SIG field, the UL/DL field is set to 0, the PPDU Type And Compression Mode field is set to 2, and the Co-BF/Co-SR Indication field is set to 0), and a DL non-OFDMA MU-MIMO transmission (in the U-SIG field, the UL/DL field is set to 0, the PPDU Type And Compression Mode field is set to 2, and the Co-BF/Co-SR Indication field is set to 1), the number of User fields is indicated by the Number Of Non-OFDMA Users subfield. The Common field of the UHR-SIG content channel is encoded together with the first User field in the same content channel. This common encoding block contains a CRC and a Tail.

The content of the common encoding block in the UHR-SIG field for a UHR SU transmission, DL SU Co-SR transmission, DL non-OFDMA MU-MIMO transmission and DL non-OFDMA Co-BF transmission is defined in Table 38-28 (The common encoding block in a UHR-SIG field for a UHR SU transmission , DL SU Co-SR transmission, and DL non-OFDMA MU-MIMO transmission, and DL non-OFDMA Co-BF transmission). In the case of a DL non-OFDMA MU-MIMO transmission or DL non-OFDMA Co-BF transmission, the remaining user fields (if present) in each content channel are grouped into user encoding blocks using the same method as the OFDMA transmission.

Copyright © 2025 IEEE. All rights reserved.
This is an unapproved IEEE Standards Draft, subject to change.

Table 38-30—The common encoding block in a UHR-SIG field for a UHR SU transmission , DL SU Co-SR transmission, and DL non-OFDMA MU-MIMO transmission, and DL non-OFDMA Co-BF transmission

Bit	Subfield	Number of bits per subfield	Description
B0–B18	Common field for a UHR SU transmission, DL SU Co-SR transmission, DL on-OFDMA MU-MIMO transmission, and DL non-OFDMA Co-BF transmission	19	The Common field for a UHR SU transmission, DL SU Co-SR transmission, DL non-OFDMA MU-MIMO transmission, and DL non-OFDMA Co-BF transmission is defined in Table 38-29 (Common field for a UHR SU transmission, DL SU Co-SR transmission, DL non-OFDMA MU-MIMO transmission, and DL non-OFDMA Co-BF transmission).
B19–B41	User field	23	The User field format for a non-MU-MIMO allocation or Co-SR allocation is defined in Table 38-32 (User field format for a non-MU-MIMO allocation or Co-SR allocation). The User field format for an MU-MIMO allocation or Co-BF allocation is defined in Table 38-34 (User field format for an MU-MIMO allocation or Co-BF allocation).
B42–B45	CRC	4	The CRC is calculated over bits 0 to 41. The CRC computation uses the same polynomial as that in 27.3.11.7.3 (CRC computation).
B46–B51	Tail	6	Used to terminate the trellis of the convolutional decoder. Set to 0.

The contents of the User field differ depending on whether the field addresses a user in a non-MU-MIMO allocation in an RU or a user in an MU-MIMO allocation in an RU. For a UHR SU transmission, the User field format for a non-MU-MIMO allocation is used.

For the User field of a DL SU Co-SR transmission, see Table 38-32 (User field format for a non-MU-MIMO allocation or Co-SR allocation) for details. For the User field of a DL non-OFDMA Co-BF transmission, see Table 38-34 (User field format for an MU-MIMO allocation or Co-BF allocation) for details.

For a DL non-OFDMA Co-BF transmission, regarding the ordering of User fields, if the largest number of spatial streams of a STA in the coordinated BSS is larger than the number of spatial streams of any STA in the coordinating BSS, the User field(s) corresponding to the coordinated BSS are located before the User field(s) corresponding to the coordinating BSS. Otherwise, the User field(s) corresponding to the coordinating BSS are located before the User field(s) corresponding to the coordinated BSS. The ordering of the User field(s) corresponding to the same BSS is according to the user's number of spatial streams in non-increasing order.

Copyright © 2025 IEEE. All rights reserved.
This is an unapproved IEEE Standards Draft, subject to change.

The user encoding block is defined in Table 38-31 (The user encoding block). For non-OFDMA transmission to multiple users, the user encoding block is present if there are more than one User fields in the corresponding content channel.

Table 38-31—The user encoding block

Bit	Subfield	Number of subfields	Number of bits per subfield	Description
B0–B23*N*-1	User field	*N*	23	*N* User fields are present, where: *N* = 1 if it is the final user encoding block, and if there is only one user in the final user encoding block. *N* = 2 otherwise. The User field format for a non-MU-MIMO allocation or Co-SR allocation is defined in Table 38-32 (User field format for a non-MU-MIMO allocation or Co-SR allocation). The User field format for an MU-MIMO allocation or Co-BF allocation is defined in Table 38-34 (User field format for an MU-MIMO allocation or Co-BF allocation).
B23*N*–B23*N*+3	CRC	1	4	The CRC is calculated over bits 0 to 22 for a user encoding block that contains one User field, and bits 0 to 45 for a user encoding block that contains two User fields. The CRC computation uses the same polynomial as that in 27.3.11.7.3 (CRC computation).
B23*N*+4–B23*N*+9	Tail	1	6	Used to terminate the trellis of the convolutional decoder. Set to 0.

The User field format for a non-MU-MIMO allocation or Co-SR allocation is defined in Table 38-32 (User field format for a non-MU-MIMO allocation or Co-SR allocation).

Copyright © 2025 IEEE. All rights reserved.
This is an unapproved IEEE Standards Draft, subject to change.

Table 38-32—User field format for a non-MU-MIMO allocation or Co−SR allocation

Bit	Subfield	Number of bits	Description
B0–B10	STA-ID	11	Set to a value of the TXVECTOR parameter STA-ID (see 37.13.1.1 (STA_ID)).
B11–B15	MCS	5	If the STA-ID subfield is not equal to 2046, this subfield indicates the following MCS used in the spatial stream(s) of the EQM case or used in the first spatial stream of the UEQM case: If the UEQM subfield is set to 0, set to *n* for UHR-MCS **n**, where *n* = 0, 1, ..., 13, 15, 17, 19, 20 and 23. Other values are Validate. If the UEQM subfield is set to 1 and the UEQM Pattern subfield is set to 0, set to *n* for UHR-MCS *n*, where *n* = 3, 4, …, 13, 19 and 23. If the UEQM subfield is set to 1 and the UEQM Pattern subfield is set to 1, 2 or 3, set to *n* for UHR-MCS *n*, where *n* = 5, 6, 8, 9, …, 13, and 23. Other values are Validate. NOTE—BPSK modulation is not used in UEQM. Set to an arbitrary value if the STA-ID subfield is equal to 2046. If the UL/DL subfield of the U-SIG field is set to 0: If the value of STA-ID subfield matches the user's STA-ID, the value of UHR-MCS 15 is Validate if the condition described in 38.1.1 (Introduction to the UHR PHY) is not met. If the value of STA-ID subfield does not match the user's STA-ID, all values are Disregard. If the UL/DL subfield of the U-SIG field is set to 1, the value of UHR-MCS 15 is Validate if the condition described in 38.1.1 (Introduction to the UHR PHY) is not met.
B16–B18	NSS	3	If the STA-ID subfield is not equal to 2046, it indicates the number of spatial streams for up to eight spatial streams. Set to the number of spatial streams minus 1. Set to an arbitrary value if the STA-ID subfield is equal to 2046. If the UEQM subfield is equal to 1, values 0, 4-7 are Validate. If the UL/DL subfield of the U-SIG field is set to 0: If the value of STA-ID subfield does not match the user's STA-ID, all values are Disregard. If the PPDU Type And Compression Mode field in U-SIG is set to 1 and the Co-BF/Co-SR Indication field in U-SIG is set to 0 (Co-SR transmission), values 4-7 are Validate.

Copyright © 2025 IEEE. All rights reserved.
This is an unapproved IEEE Standards Draft, subject to change.

Table 38-32—User field format for a non-MU-MIMO allocation or Co−SR allocation ***(contin-***

Bit	Subfield	Number of bits	Description
B19	UEQM	1	If the STA-ID subfield is not equal to 2046, it indicates whether EQM or UEQM is used: Set to 0 for EQM. Set to 1 for UEQM. Set to an arbitrary value if the STA-ID subfield is equal to 2046. If the UL/DL subfield of the U-SIG field is set to 0 and if the value of STA-ID subfield does not match the user's STA-ID, all values are Disregard.
B20-B21	Beamformed And Coding/ UEQM Pattern	2	If the STA-ID subfield is not equal to 2046, and the UEQM subfield is equal to 0: B20 is the Beamformed subfield indicating transmit beamforming: Set to 1 if a beamforming steering matrix is applied to the waveform in a non-MU-MIMO allocation. Set to 0 otherwise. B21 is the Coding subfield indicating whether BCC or LDPC is used: Set to 0 for BCC. Set to 1 for LDPC. If the STA-ID subfield is not equal to 2046, and the UEQM subfield is equal to 1: LDPC is used, a beamforming steering matrix is applied and B20-B21 is the UEQM Pattern subfield indicating the UEQM pattern for the corresponding number of spatial streams indicated in the NSS subfield. See Table 38-33 (UEQM pattern subfield encoding) for definition. Undefined values of this field are Validate. Set to an arbitrary value if the STA-ID subfield is 2046. If the UL/DL subfield of the U-SIG field is set to 0 and if the value of STA-ID subfield does not match the user's STA-ID, all values are Disregard.

Copyright © 2025 IEEE. All rights reserved.
This is an unapproved IEEE Standards Draft, subject to change.

Table 38-32—User field format for a non-MU-MIMO allocation or Co−SR allocation *(contin-*

Bit	Subfield	Number of bits	Description
B22	2xLDPC	1	If the STA-ID subfield is not equal to 2046, and either both the UEQM subfield is equal to 0 and the Coding subfield is equal to 1 or the UEQM subfield is equal to 1, this subfield indicates whether nominal LDPC codeword length of 3888 is used: Set to 0 to indicate the nominal LDPC codeword length of 648, 1296 or 1944 is used. Set to 1 to indicate the nominal LDPC codeword length of 3888 is used. If the STA-ID subfield is not equal to 2046, the UEQM subfield is equal to 0 and the Coding subfield is equal to 0, this subfield is set to 1 and treat as Validate. Set to an arbitrary value if the STA-ID subfield is 2046. If the UL/DL subfield of the U-SIG field is set to 0 and if the value of STA-ID subfield does not match the user's STA-ID, all values are Disregard.

In Table 38-33 (UEQM pattern subfield encoding), "s" is the constellation index value corresponding to the modulation order of the UHR-MCS used in the first spatial stream, which is defined in (#Ed)Table 9-459 (Constellation index), and "s-Δ" represents the modulation order(s) used by any of the remaining spatial stream(s) with Δ modulation orders lower than s.

NOTE—Constellation indices 1, 2, 3, 4, 5 and 6 correspond to QPSK, 16-QAM, 64-QAM, 256-QAM, 1024-QAM and 4096-QAM respectively.

Table 38-33—UEQM pattern subfield encoding

NSS Subfield	Number of Spatial Streams	UEQM Pattern Subfield	UEQM pattern			
			Stream 1	Stream 2	Stream 3	Stream 4
1	2	0	s	s-1	N/A	N/A
		1	s	s-2	N/A	N/A
2	3	0	s	s	s-1	N/A
		1	s	s	s-2	N/A
		2	s	s-1	s-2	N/A

Copyright © 2025 IEEE. All rights reserved.
This is an unapproved IEEE Standards Draft, subject to change.

Table 38-33—UEQM pattern subfield encoding *(continued)*

NSS Subfield	Number of Spatial Streams	UEQM Pattern Subfield	UEQM pattern			
			Stream 1	Stream 2	Stream 3	Stream 4
3	4	0	s	s	s	s-1
		1	s	s	s	s-2
		2	s	s	s-1	s-2
		3	s	s-1	s-1	s-2

The User field format for an MU-MIMO allocation is defined in Table 38-34 (User field format for an MU-MIMO allocation or Co-BF allocation).

Table 38-34—User field format for an MU-MIMO allocation or Co-BF allocation

Bit	Subfield	Number of bits	Description
B0–B10	STA-ID	11	Set to a value of the TXVECTOR parameter STA-ID (see 37.13.1.1 (STA_ID)). NOTE—An RU/MRU using MU-MIMO has RU/MRU size greater than or equal to 484+242 tones. Thus, the STA ID subfield is not set to 2046 for an MU-MIMO RU allocation (see 38-27 (Common field for OFDMA transmission)).
B11–B15	MCS	5	Indicates the following modulation and coding scheme: Set to *n* for UHR-MCS *n*, where *n* = 0, 1,...,13, 17, 19, 20 and 23. If the value of STA-ID subfield matches the user's STA-ID, other values are Validate. If the value of STA-ID subfield does not match the user's STA-ID, all values are Disregard.
B16–B19	Spatial Configuration	4	Indicates the number of spatial streams for a user in an MU-MIMO allocation (see Table 27-31 (Spatial Configuration subfield encoding)). The Spatial Configuration field in the User field of the UHR-SIG field in PPDUs for Co-BF transmission reuses the same design as in UHR DL MU-MIMO. If the value of STA-ID subfield matches the user's STA-ID, the values that are reserved or do not exist in Table 27-31 (Spatial Configuration subfield encoding)) are Validate. If the value of STA-ID subfield does not match the user's STA-ID, all values are Disregard. If the UL/DL Field in U-SIG is set to 0 and the PPDU Type And Compression Mode Field in U-SIG is set to 2 and the Co-BF/Co-SR Indication Field in U-SIG is set to 0: • If the Number of Non-OFDMA Users Field in UHR-SIG is set to 1, the values 3 and 5-7 are Validate • If the Number of Non-OFDMA Users Field in UHR-SIG is set to 2, the values 2-7 are Validate • If the Number of Non-OFDMA Users Field in UHR-SIG is set to 3, the values 1-7 are Validate

Copyright © 2025 IEEE. All rights reserved.
This is an unapproved IEEE Standards Draft, subject to change.

Table 38-34—User field format for an MU-MIMO allocation or Co-BF allocation

Bit	Subfield	Number of bits	Description
B20	Disregard	1	Set to 1
B21	Coding/ BSS Color Indication	1	It indicates whether BCC or LDPC is used: Set to 0 for BCC. Set to 1 for LDPC. If the RU size is larger than 242, this bit is reserved and set to 1. If the value of STA-ID subfield matches the user's STA-ID, the Reserved subfield is Validate. If the value of STA-ID subfield does not match the user's STA-ID, the Reserved subfield is Disregard. If the UL/DL Field in U-SIG is set to 0 and the PPDU Type And Compression Mode Field in U-SIG is set to 2 and the Co-BF/Co-SR Indication Field in U-SIG is set to 0, it indicates whether the STA ID indicated in the User Field belongs to BSS Color or BSS Color 2 as indicated in 38.3.15.7 (U-SIG) Set to 0 to indicate that the User field belongs to the first coordinated BSS, indicated by the BSS Color subfield of U-SIG field, Set to 1 to indicate that the User field belongs to the second coordinated BSS, indicated by the BSS Color 2 subfield of U-SIG field.
B22	2xLDPC	1	If the Coding subfield is equal to 1, it indicates whether nominal LDPC codeword with length of 3888 is used or not: Set to 0 to indicate the nominal LDPC codeword with length of 648, 1296 or 1944 is used. Set to 1 to indicate the nominal LDPC codeword with length of 3888 is used. Otherwise, this subfield is set to 1 and treat as Validate. If the UL/DL subfield of the U-SIG field is set to 0 and if the value of STA-ID subfield does not match the user's STA-ID, all values are Disregard.

The Spatial Configuration field in User field of UHR-SIG field in PPDUs for Co-BF transmission re-uses the same design as in UHR DL MU-MIMO. The encoding table will be the same as that in HE.

In a PPDU of Co-BF transmission, all the User fields of UHR-SIG belonging to an AP and the corresponding spatial streams are contiguous. The User fields of one AP are together followed by the user fields of the other AP and the same holds for the allocated spatial streams

LDPC is the only coding mode for Co-BF.

38.3.15.9.6 Encoding and modulation

The encoding and modulation of the UHR-SIG field shall follow the encoding and modulation of the EHT-SIG field as in 36.3.12.8.6 Encoding and modulation.

Copyright © 2025 IEEE. All rights reserved.
This is an unapproved IEEE Standards Draft, subject to change.

38.3.15.10 UHR-STF

38.3.15.10.1 UHR-STF for RRUs

The main purpose of the UHR-STF field is to improve automatic gain control estimation in a MIMO transmission. The UHR-STF field is positioned immediately after the UHR-SIG field for UHR MU PPDU. The UHR-STF field is positioned immediately after the U-SIG field for UHR TB PPDU. The UHR-STF field is positioned immediately after the ELR-MARK field for UHR ELR PPDU. The duration of the UHR-STF field for UHR MU PPDU and UHR ELR PPDU is $T_{\text{UHR-STF-NT}}$ (periodicity of 0.8 µs with 5 periods as given in Table 38-18 (Timing-related constants)) and the duration of the UHR-STF field for UHR TB PPDU is $T_{\text{UHR-STF-T}}$ (periodicity of 1.6 µs with 5 periods as given in Table 38-18 (Timing-related constants)). 3dB power boosting shall be applied on UHR-STF in UHR ELR PPDU.

For a 20 MHz transmission, the frequency domain sequence for a UHR MU PPDU and a UHR ELR PPDU is given by Equation (38-16).

$$UHRS_{-112:16:112} = HES_{-112:16:112} \tag{38-16}$$

where $UHRS_{a:b:c}$ means coefficients of the UHR-STF on every b subcarrier indices from a to c subcarrier indices and coefficients on other subcarrier indices are set to zero and $HES_{-112:16:112}$ is defined in Equation (27-23).

For a 40 MHz transmission, the frequency domain sequence for UHR MU PPDU is given by Equation (38-17).

$$UHRS_{-240:16:240} = HES_{-240:16:240} \tag{38-17}$$

where $HES_{-240:16:240}$ is defined in Equation (27-24).

For an 80 MHz transmission, the frequency domain sequence for UHR MU PPDU is given by Equation (38-18).

$$UHRS_{-496:16:496} = HES_{-496:16:496} \tag{38-18}$$

where $HES_{-496:16:496}$ is defined in Equation (27-25).

For a 160 MHz transmission, the frequency domain sequence for UHR MU PPDU is given by Equation (38-19).

$$UHRS_{-1008:16:1008} = HES_{-1008:16:1008} \tag{38-19}$$

where $HES_{-1008:16:1008}$ is defined in Equation (27-26).

For a 320 MHz transmission, the frequency domain sequence for UHR MU PPDU is given by Equation (38-20).

Copyright © 2025 IEEE. All rights reserved.
This is an unapproved IEEE Standards Draft, subject to change.

$$UHRS_{-2032:16:2032} = EHTS_{-2032:16:2032} \tag{38-20}$$

where $EHTS_{-2032:16:2032}$ is defined in Equation (36-29).

For a 20 MHz transmission, the frequency domain sequence for UHR TB PPDU is given by Equation (38-21).

$$UHRS_{-120:8:120} = HES_{-120:8:120} \tag{38-21}$$

where $HES_{-120:8:120}$ is defined in Equation (27-28).

For a 40 MHz transmission, the frequency domain sequence for UHR TB PPDU is given by Equation (38-22).

$$UHRS_{-248:8:248} = HES_{-248:8:248} \tag{38-22}$$

where $HES_{-248:8:248}$ is defined in Equation (27-30).

For an 80 MHz transmission, the frequency domain sequence for UHR TB PPDU is given by Equation (38-23).

$$UHRS_{-504:8:504} = HES_{-504:8:504} \tag{38-23}$$

where $HES_{-504:8:504}$ is defined in Equation (27-32).

For a 160 MHz transmission, the frequency domain sequence for UHR TB PPDU is given by Equation (38-24).

$$UHRS_{-1016:8:1016} = HES_{-1016:8:1016} \tag{38-24}$$

where $HES_{-1016:8:1016}$ is defined in Equation (27-34).

For a 320 MHz transmission, the frequency domain sequence for UHR TB PPDU is given by Equation (38-25).

$$UHRS_{-2040:8:2040} = EHTS_{-2040:8:2040} \tag{38-25}$$

where $EHTS_{-2040:8:2040}$ is defined in Equation (36-34).

The coefficients in Equation (38-16) to Equation (38-25) are set to zero if those values are corresponding to subcarrier indices that are not modulated in the Data field, such as subcarriers falling within RUs that have no users assigned to them in OFDMA, subcarriers that are punctured, or null, or DC subcarriers.

Copyright © 2025 IEEE. All rights reserved.
This is an unapproved IEEE Standards Draft, subject to change.

The time domain representation of the signal for UHR MU PPDU on transmit chain i_{TX} shall be as specified in Equation (38-26).

$$r_{\text{UHR-STF}}^{(i_{TX})}(t) \tag{38-26}$$

$$= w_{T_{\text{UHR-STF-NT}}}(t) \sum_{r=0}^{N_{RU}-1} \frac{\alpha_r \beta_r}{\sqrt{N_{SS,r,total}}}$$

$$\eta_{\text{UHR-STF}} \sum_{k \in K_r} \sum_{u=0}^{N_{user,r}-1} \sum_{m=1}^{N_{SS,r,u}} ([Q_{k,u}]_{i_{TX},m} UHRS_k \cdot \exp(j2\pi k \Delta_{F,\text{UHR}}(t - T_{CS,\text{UHR}}(M_{r,u}+m))))$$

where

α_r is defined in 38.3.14.4 (Transmitted signal).

β_r is the per-RU power normalization factor and defined by $\beta_r = \dfrac{\left(\sqrt{\dfrac{|K_r|}{|K_r^{\text{UHR-STF}}|}}\right)}{\left(\sqrt{\sum_{r=0}^{N_{RU}-1} \alpha_r^2 |K_r|}\right)}$.

$\eta_{\text{UHR-STF}}$ is a power scaling factor of a UHR-STF and equals 1 for a UHR MU PPDU.

$|K_r|$ is the cardinality of the set of subcarriers K_r as defined in 38.3.14 (Mathematical description of signals).

$K_r^{\text{UHR-STF}}$ is the set of subcarriers that have nonzero values within K_r in the UHR-STF field.

$T_{CS,\text{UHR}}(M_{r,u}+m)$ represents the cyclic shift for spatial stream $M_{r,u}+m$ as defined in 38.3.15.2.2 (Cyclic shift for UHR modulated fields).

$Q_{k,u}$ is defined in 38.3.14.4 (Transmitted signal).

$w_{T_{\text{UHR-STF-NT}}}$ is the windowing function for UHR-STF field in the UHR MU PPDU.

$|K_r^{\text{UHR-STF}}|$ is the cardinality of the set of subcarriers $K_r^{\text{UHR-STF}}$.

N_{RU}, $N_{SS,r,total}$, $N_{user,r}$, and $N_{SS,r,u}$ are defined in Table 38-21 (Frequently used parameters).

The time domain representation of the signal for UHR ELR PPDU on transmit chain i_{TX} shall be as specified in Equation (38-27).

$$r_{\text{UHR-STF}}^{(i_{TX})}(t) \tag{38-27}$$

$$= w_{T_{\text{UHR-STF-NT}}}(t) \frac{\eta_{\text{UHR-STF}}}{\sqrt{|K_0^{\text{UHR-STF}}|}}$$

$$\sum_{k \in K_0} [Q_{k,0}]_{i_{TX},1} UHRS_k \cdot \exp(j2\pi k \Delta_{F,\text{UHR}}(t - T_{CS,\text{UHR}}(1)))$$

where

$\eta_{\text{UHR-STF}}$ is a power scaling factor of a UHR-STF and equals $\sqrt{2}$ for a UHR ELR PPDU.

$K_0^{\text{UHR-STF}}$ is the set of subcarriers that have nonzero values within K_0 in the UHR-STF field.

Copyright © 2025 IEEE. All rights reserved.
This is an unapproved IEEE Standards Draft, subject to change.

$\left|K_0^{\text{UHR-STF}}\right|$ is the cardinality of the set of subcarriers $K_0^{\text{UHR-STF}}$.

K_0 is the set of subcarriers indices for the tones in four 52 RRUs used for a UHR ELR PPDU.

The time domain representation of the signal for a UHR TB PPDU transmitted by user u in the r-th RU on transmit chain i_{TX} shall be as specified in Equation (38-28).

$$r_{\text{UHR-STF},\,r,\,u}^{(i_{TX})}(t) = \frac{1}{\sqrt{\left|K_r^{\text{UHR-STF}}\right| N_{SS,\,r,\,u}}} w_{T_{\text{UHR-STF-T}}}(t) \sum_{k \in K_r} \sum_{m=1}^{N_{SS,\,r,\,u}} \left([Q_{k,\,u}]_{i_{TX},\,m} UHRS_k \cdot \exp(j2\pi k \Delta_{F,\,\text{UHR}}(t - T_{CS,\,\text{UHR}}(M_{r,\,u} + m))) \right) \quad (38\text{-}28)$$

where

$w_{\text{UHR-STF-T}}$ is the windowing function for UHR-STF field in the UHR TB PPDU.

$Q_{k,\,u}$ is defined in 38.3.14.4 (Transmitted signal).

Other variables in Equation (38-26) and Equation (38-28) are defined in 38.3.13 (Timing-related parameters) and 38.3.14 (Mathematical description of signals).

It is recommended that the spatial mapping matrix applied to UHR-STF and beyond is chosen such that it preserves the smoothness of the physical channel, achieved by limiting the variation of each element's real and imaginary values in the spatial mapping matrix across successive tones within one RU.

38.3.15.10.2 UHR-STF for DRUs

The same UHR-STF sequences are used in UHR TB PPDUs for both UHR DRU and UHR RRU. For a DRU with a given DBW transmitted in a UHR TB PPDU, UHR-STF sequence depends on the PPDU BW, the occupied STF tones are the same as that of the largest RRU corresponding to the DBW within the PPDU BW.

For 20 MHz, 40 MHz, 80 MHz, 160 MHz and 320 MHz transmissions, the frequency domain sequences for UHR-STF for DRU are given by Equation (38-21), Equation (38-22), Equation (38-23), Equation (38-24) and Equation (38-25), respectively.

When transmitting a DRU with a given DBW in a UHR TB PPDU, the PPDU bandwidth determines which UHR-STF sequence is used and the DBW determines which tones in the UHR-STF field are modulated.

Let $K_{STF,242,n}$, $K_{STF,484,n}$ and $K_{STF,996,n}$ be the set of UHR-STF tones modulated when transmitting the n-th lowest 242-tone, 484-tone and 996-tone RRU in frequency, respectively, in a W_P MHz UHR TB PPDU ($W_P \geq$ DBW). Also, let $K_{STF,484+242,n}$ be the set of UHR-STF tones modulated when transmitting 484+242-tone MRU in the n-th lowest 80 MHz frequency subblock where the highest 20 MHz subchannel is unallocated in a W_P MHz UHR TB PPDU ($W_P \geq$ DBW). Then, $K_{STF,242,n}$ is the set of UHR-STF tones that are modulated when transmitting a DRU with DBW of 20 MHz located in the n-th lowest 20 MHz within the UHR TB PPDU. $K_{STF,484,n}$ is the set of UHR-STF tones that are modulated when transmitting a DRU with DBW of 40 MHz located in the n-th lowest 40 MHz within the UHR TB PPDU. $K_{STF,484+242,n}$ is the set of UHR-STF tones that are modulated when transmitting a DRU with DBW of 60 MHz located in the n-th lowest 80 MHz

Copyright © 2025 IEEE. All rights reserved.
This is an unapproved IEEE Standards Draft, subject to change.

within the UHR TB PPDU. $K_{STF,996,n}$ is the set of UHR-STF tones that are modulated when transmitting a DRU with DBW of 80 MHz located in the n-th lowest 80 MHz within the UHR TB PPDU.

The maximum DBW is 80 MHz in 80 MHz, 160 MHz, and 320 MHz UHR TB PPDUs. DRUs with DBW of 20 MHz, 40 MHz or 60 MHz are allowed within each 80 MHz frequency subblock.

The time domain representation of the signal for a UHR TB PPDU transmitted by user u in the r-th DRU on transmit chain i_{TX} shall be as specified in Equation (38-29).

$$r^{(i_{TX})}_{\text{UHR-STF},\,r,\,u}(t) = \frac{1}{\sqrt{\left|K_r^{\text{UHR-STF}}\right| N_{SS,\,r,\,u}}} w_{T_{\text{UHR-STF-T}}}(t) \sum_{k \in K_r} \sum_{m=1}^{N_{SS,\,r,\,u}} \left([Q_{k,\,u}]_{i_{TX},\,m} UHRS_k \cdot \exp\left(j2\pi\Delta_{F,\,\text{UHR}}(t - T_{CS,\,\text{UHR}}(\text{mod}(j_r + m - 2,8) + 1))\right)\right) \quad (38\text{-}29)$$

where

$K_r^{\text{UHR-STF}}$ is the set of subcarriers that have nonzero values within K_r in the UHR-STF field.

$\left|K_r^{\text{UHR-STF}}\right|$ is the cardinality of the set of subcarriers $K_r^{\text{UHR-STF}}$.

K_r is $K_{STF,242,n}$, $K_{STF,484,n}$, $K_{STF,484+242,n}$ or $K_{STF,996,n}$ depending on the DBW and the location of the r-th DRU (see 38.3.15.10.2 (UHR-STF for DRUs)).

j_r is the CSD starting index of the r-th DRU (see 38.3.15.10.4 (CSD index assignment for DRU UHR-STF transmission)).

$\text{mod}(x,y)$ is the modulo y operation on value x.

38.3.15.10.3 CSD for DRU transmission

CSD is used for a DRU UHR-STF transmission to solve unintentional beamforming issue. It is applied in each DBW. For each DRU user, a CSD index will be assigned according to its DRU index to minimize CSD collision.

A DRU transmission reuses the existing 8 CSD table (Table 21-11–Cyclic shift values for the VHT modulated fields of a PPDU) for the CSD allocation.

Like per stream CSD in UL MU-MIMO, the CSD index for each DRU assignment can be defined based on DRU index. For a DRU assignment in a DBW, it is assigned with a CSD start index j. If the number of streams (Nss) for this DRU is larger than 1, then the value used will be CSD [mod(j-1:j+Nss-2,8)+ones(1,Nss)] for each stream where j designates the CSD starting index of the DRU with a range from 1 to 8 as described in 38.3.15.10.4 (CSD index assignment for DRU UHR-STF transmission), mod(a:b,c) means a modulo c operation on values from a to b and ones(1,d) stands for a length d-vector with all elements of 1.

Copyright © 2025 IEEE. All rights reserved.
This is an unapproved IEEE Standards Draft, subject to change.

38.3.15.10.4 CSD index assignment for DRU UHR-STF transmission

For DRU UHR-STF transmission, DRU index based CSD start index assignment defined in Table 38-35 (CSD starting index for DBW20) to Table 38-38 (CSD starting index for DBW80) shall be followed for DBW of 20 MHz, 40 MHz, 60 MHz and 80 MHz, respectively.

Table 38-35—CSD starting index for DBW20

DRU size	CSD starting index for DBW20
DRU26, *i*=1:9	{1,2,3,4,5,5,6,7,8}
DRU52, *i*=1:4	{2,4,6,8}
DRU106, *i*=1:2	{3,7}

Table 38-36—CSD starting index for DBW40

DRU size	CSD starting index for DBW40
DRU26, *i*=1:18	{1,5,2,6,3,3,7,4,8,1,5,2,6,7,3,7,4,8}
DRU52, *i*=1:8	{1,2,3,4,5,6,7,8}
DRU106, *i*=1:4	{2,4,6,8}
DRU242, *i*=1:2	{3,7}

Table 38-37—CSD starting index for DBW60

DRU size	CSD starting index for DBW60
DRU52, *i*=1:12	{1,5,2,6,3,7,4,8,1,5,2,6}
DRU106, *i*=1:6	{1,2,3,4,5,6}
DRU242, *i*=1:3	{2,4,6}

Copyright © 2025 IEEE. All rights reserved.
This is an unapproved IEEE Standards Draft, subject to change.

Table 38-38—CSD starting index for DBW80

DRU size	CSD starting index for DBW80
DRU52, *i*=1:16	{1,5,2,6,3,7,4,8,1,5,2,6,3,7,4,8}
DRU106, *i*=1:8	{1,2,3,4,5,6,7,8}
DRU242, *i*=1:4	{2,4,6,8}
DRU484, *i*=1:2	{3,7}

38.3.15.11 UHR-LTF

38.3.15.11.1 General

The UHR-LTF field provides a means for the receiver to estimate the MIMO channel between the set of constellation mapper outputs and the receive chains. In a UHR MU PPDU, the transmitter provides training for $N_{SS,r,total}$ spatial streams used for the transmission of the PSDU(s) in the *r*-th RU or MRU. In a UHR TB PPDU, the transmitter of user *u* in the *r*-th RU or MRU provides training for $N_{SS,r,u}$ spatial streams used for the transmission of the PSDU. For each subcarrier in the *r*-th RU or MRU, the MIMO channel that can be estimated is an $N_{RX} \times N_{SS,r,total}$ matrix. A UHR transmission has a preamble that contains UHR-LTF symbols, where the data tones of each UHR-LTF symbol are multiplied by entries belonging to a matrix $P_{\text{UHR-LTF}}$, to enable channel estimation at the receiver. When single stream pilots are used in 2× or 4× UHR-LTF, the pilot subcarriers of each UHR-LTF symbol are multiplied by the entries of a matrix $R_{\text{UHR-LTF}}$ to allow receivers to track phase and/or frequency offset during MIMO channel estimation using the UHR-LTF. Single stream pilots shall be used for all spatial multiplexing modes (both UL and DL) defined in UHR except when 1× UHR-LTF is used. $P_{\text{UHR-LTF}}$ is defined such that each modulated spatial stream in an RU or MRU is active on all subcarriers in that RU or MRU for which the UHR-LTF sequence takes a nonzero value.

In a UHR MU PPDU, $N_{\text{UHR-LTF}}$ is indicated in the UHR-SIG field. In a non-OFDMA UHR MU PPDU or UHR sounding NDP, the initial number of UHR-LTF symbols, initial $N_{\text{UHR-LTF}}$, is a function of the total number of spatial streams N_{SS} as shown in Table 38-39 (Initial number of UHR-LTFs required for different number of spatial streams).

Table 38-39—Initial number of UHR-LTFs required for different number of spatial streams

N_{SS}	**Initial** $N_{\text{UHR-LTF}}$
1	1
2	2

Copyright © 2025 IEEE. All rights reserved.
This is an unapproved IEEE Standards Draft, subject to change.

Table 38-39—Initial number of UHR-LTFs required for different number of spatial streams

N_{SS}	**Initial** $N_{\text{UHR-LTF}}$
3–4	4
5–6	6
7–8	8

In order to improve the MIMO channel estimation for the reception of non-OFDMA UHR MU PPDU or UHR sounding NDP, the number of UHR-LTFs may be larger than the initial number of UHR-LTFs determined by the total number of spatial streams. If additional UHR-LTFs are used, then the total number of UHR-LTFs (which is signaled separately from N_{SS}) shall be no more than twice the initial number of UHR-LTFs determined by the number of spatial streams as shown in Table 38-39 (Initial number of UHR-LTFs required for different number of spatial streams), and chosen from the set {2 4 8}. Supporting additional UHR-LTFs is optional for the receiver. In an OFDMA UHR MU PPDU using MU-MIMO in at least one RU or MRU, the total number of UHR-LTF symbols shall be chosen from the set {2, 4, 8}.

The maximum number of supported UHR-LTFs shall be no less than the value indicated in Table 38-39 (Initial number of UHR-LTFs required for different number of spatial streams) based on the maximum number of supported spatial streams, which is the highest N_{SS} value indicated by the STA in Beamformee SS subfield and Supported UHR-MCS And NSS Set field over all supported bandwidths and UHR-MCSs in the UHR Capabilities element.

In an OFDMA UHR MU PPDU, $N_{\text{UHR-LTF}}$ may take a value that is greater than or equal to the maximum value of the initial number of UHR-LTF symbols for each RU or MRU, where the initial number of UHR-LTF symbols is calculated as a function of $N_{SS,\,r,\,total}$ (where r is the index of the RU or MRU) based on Table 38-39 (Initial number of UHR-LTFs required for different number of spatial streams).

In a UHR TB PPDU, $N_{\text{UHR-LTF}}$ is indicated in the Trigger frame that triggers the transmission of the PPDU. For a UHR TB PPDU, $N_{\text{UHR-LTF}}$ may be greater than or equal to the maximum value of the initial number of UHR-LTF symbols for each RU or MRU r, which is calculated as a function of $N_{SS,\,r,\,total}$, separately based on Table 38-39 (Initial number of UHR-LTFs required for different number of spatial streams).

6 $N_{\text{UHR-LTF}}$ is disallowed for a DRU transmission and a hybrid RRU and DRU transmission.(#M527)

A UHR PPDU supports three UHR-LTF types: 1× UHR-LTF, 2× UHR-LTF, and 4× UHR-LTF. Table 38-40 (UHR-LTF type and GI duration combinations for various UHR PPDU formats) defines whether a particular

Copyright © 2025 IEEE. All rights reserved.
This is an unapproved IEEE Standards Draft, subject to change.

UHR-LTF type and GI duration combination is mandatory, optional, or not supported for each UHR PPDU format.

Table 38-40—UHR-LTF type and GI duration combinations for various UHR PPDU formats

UHR-LTF type and GI duration combination	UHR MU PPDU	UHR TB PPDU	UHR ELR PPDU
1× UHR-LTF and 1.6 µs GI	N/A	M (See NOTE 1 and 2)	N/A
2× UHR-LTF and 0.8 µs GI	M	N/A	N/A
2× UHR-LTF and 1.6 µs GI	M	M (See NOTE 2)	M
4× UHR-LTF and 0.8 µs GI	O	N/A	N/A
4× UHR-LTF and 3.2 µs GI	M	M (See NOTE 2)	N/A

M = Mandatory
O = Optional
N/A = Not supported by the PPDU format
NOTE 1—1× UHR-LTF and 1.6 µs GI are only allowed for UL non-OFDMA transmission for two or more users.
NOTE 2—For UHR TB PPDU with DRU, only 4× UHR-LTF and 3.2 µs GI combination is allowed.
If a STA does not support transmission or reception of a particular PPDU format, then the M/O designation is not applicable for the transmission or reception, respectively, of that PPDU format.

In a UHR MU PPDU, the combination of UHR-LTF type and GI duration is indicated in UHR-SIG field. In a UHR TB PPDU, the combination of UHR-LTF type and GI duration is indicated in the Trigger frame that triggers the transmission of the PPDU. If a UHR PPDU is a UHR sounding NDP, the combinations of UHR-LTF types and GI durations are listed in 38.3.23 (EHT sounding NDP for UHR Co-BF sounding sequence).

$T_{\text{UHR-LTF}}$, described in Table 38-18 (Timing-related constants), is given by Equation (38-30).

$$T_{\text{UHR-LTF}} = \begin{cases} T_{\text{UHR-LTF-1X}}, & \text{if } 1 \times \text{UHR-LTF} \\ T_{\text{UHR-LTF-2X}}, & \text{if } 2 \times \text{UHR-LTF} \\ T_{\text{UHR-LTF-4X}}, & \text{if } 4 \times \text{UHR-LTF} \end{cases} \tag{38-30}$$

where $T_{\text{UHR-LTF-1X}}$, $T_{\text{UHR-LTF-2X}}$, and $T_{\text{UHR-LTF-4X}}$ are defined in Table 38-18 (Timing-related constants).

In a 20 MHz transmission, the 1× UHR-LTF sequence transmitted on subcarriers [–122: 122] is given by Equation (27-41) with $HELTF_{-122,\,122}$ replaced by $UHRLTF_{-122,\,122}$.

In a 20 MHz transmission, the 2× UHR-LTF sequence transmitted on subcarriers [–122: 122] is given by Equation (27-42) with $HELTF_{-122,\,122}$ replaced by $UHRLTF_{-122,\,122}$.

In a 20 MHz transmission, the 4× UHR-LTF sequence for RRU transmission transmitted on subcarriers [–122: 122] is given by Equation (27-43) with $HELTF_{-122,\,122}$ replaced by $UHRLTF_{-122,\,122}$.

In a 40 MHz transmission, the 1× UHR-LTF sequence transmitted on subcarriers [–244: 244] is given by Equation (27-44) with $HELTF_{-244,\,244}$ replaced by $UHRLTF_{-244,\,244}$.

Copyright © 2025 IEEE. All rights reserved.
This is an unapproved IEEE Standards Draft, subject to change.

In a 40 MHz transmission, the 2× UHR-LTF sequence transmitted on subcarriers [–244: 244] is given by Equation (27-45) with $HELTF_{-244,\,244}$ replaced by $UHRLTF_{-244,\,244}$.

In a 40 MHz transmission, the 4× UHR-LTF sequence for RRU transmission transmitted on subcarriers [–244: 244] is given by Equation (27-46) with $HELTF_{-244,\,244}$ replaced by $UHRLTF_{-244,\,244}$.

In an 80 MHz transmission, the 1× UHR-LTF sequence transmitted on subcarriers [–500: 500] is given by Equation (27-47) with $HELTF_{-500,\,500}$ replaced by $UHRLTF_{-500,\,500}$.

In an 80 MHz transmission, the 2× UHR-LTF sequence transmitted on subcarriers [–500: 500] is given by Equation (27-48) with $HELTF_{-500,\,500}$ replaced by $UHRLTF_{-500,\,500}$.

In an 80 MHz transmission, the 4× UHR-LTF sequence for RRU transmission transmitted on subcarriers [–500: 500] is given by Equation (27-49) with $HELTF_{-500,\,500}$ replaced by $UHRLTF_{-500,\,500}$.

In a 160 MHz transmission, the 1× UHR-LTF sequence transmitted on subcarriers [–1012: 1012] is given by Equation (27-50) with $HELTF_{-1012,\,1012}$ replaced by $UHRLTF_{-1012,\,1012}$.

In a 160 MHz transmission, the 2× UHR-LTF sequence transmitted on subcarriers [–1012: 1012] is given by Equation (27-51) with $HELTF_{-1012,\,1012}$ replaced by $UHRLTF_{-1012,\,1012}$.

In a 160 MHz transmission, the 4× UHR-LTF sequence for RRU transmission transmitted on subcarriers [–1012: 1012] is given by Equation (27-52) with $HELTF_{-1012,\,1012}$ replaced by $UHRLTF_{-1012,\,1012}$.

In a 320 MHz transmission, the 1× UHR-LTF sequence transmitted on subcarriers [–2036: 2036] is given by Equation (36-38) with $EHTLTF_{-2036,\,2036}$ replaced by $UHRLTF_{-2036,\,2036}$.

In a 320 MHz transmission, the 2× UHR-LTF sequence transmitted on subcarriers [–2036: 2036] is given by Equation (36-39) with $EHTLTF_{-2036,\,2036}$ replaced by $UHRLTF_{-2036,\,2036}$.

In a 320 MHz transmission, the 4× UHR-LTF sequence for RRU transmission transmitted on subcarriers [–2036: 2036] is given by Equation (36-40) with $EHTLTF_{-2036,\,2036}$ replaced by $UHRLTF_{-2036,\,2036}$.

For a non-OFDMA transmission when preamble puncturing is applied, a single large size MRU spans the nonpunctured portions of the PPDU bandwidth. In the puncturing case, the values of the UHR-LTF sequence (defined in Equation (27-41) to Equation (27-52) and Equation (36-38) to Equation (36-40)) are replaced by zero for subcarriers that fall outside the aforementioned single large size MRU. This is also applicable to a UHR sounding NDP with preamble puncturing. The mapping of the non-OFDMA puncturing pattern signaled in the U-SIG field to the corresponding large size MRU is defined in Table 36-30 (Definition of the Punctured Channel Information field in the U-SIG for an EHT MU PPDU using non-OFDMA transmissions).

For an OFDMA transmission, the values of the UHR-LTF sequence (defined in Equation (27-41) to Equation (27-52) and Equation (36-38) to Equation (36-40)) are replaced by zero, for all subcarriers that are unassigned or punctured as well as for DC tones or null subcarriers.

Copyright © 2025 IEEE. All rights reserved.
This is an unapproved IEEE Standards Draft, subject to change.

The generation of the time domain symbols of a 1× UHR-LTF is equivalent to modulating every fourth subcarriers in an OFDM symbol of 12.8 µs excluding GI, and then transmitting only the first quarter of the OFDM symbol in the time domain as shown in Figure 38-22 (Generation of 1× UHR-LTF symbols).

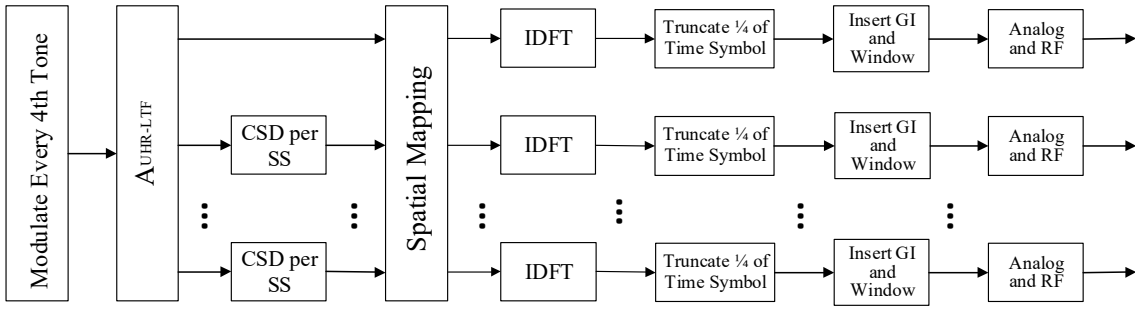

Figure 38-22—Generation of 1× UHR-LTF symbols

There are no pilot subcarriers in the UHR-LTF field when 1× UHR-LTF is used.

The generation of the time domain symbols of a 2× UHR-LTF is equivalent to modulating every second subcarriers in an OFDM symbol of 12.8 µs excluding GI, and then transmitting only the first half of the OFDM symbol in the time domain as shown in Figure 38-23 (Generation of 2× UHR-LTF symbols).

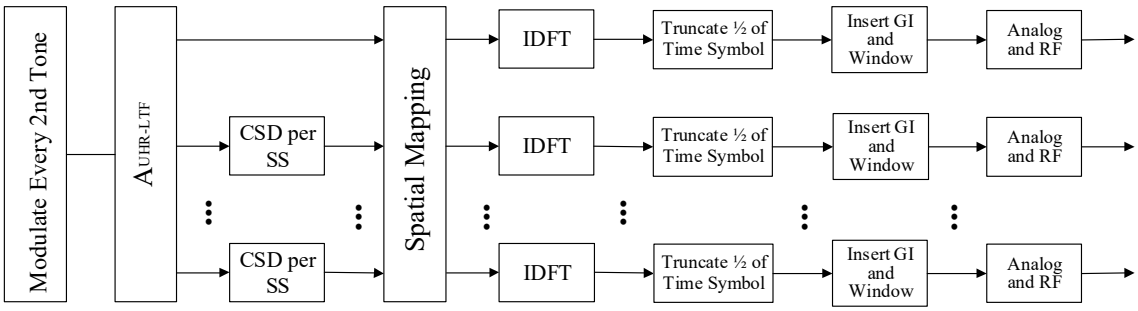

Figure 38-23—Generation of 2× UHR-LTF symbols

In a UHR MU PPDU, the time domain representation of the UHR-LTF waveform transmitted on the transmit chain i_{TX} shall be as described in Equation (38-31).

$$r^{(i_{TX})}_{\text{UHR-LTF}}(t) = \frac{1}{\sqrt{\sum_{r=0}^{N_{RU}-1} \alpha_r^2 |K_r|}} \sum_{n=0}^{N_{\text{UHR-LTF}}-1} w_{T_{\text{UHR-LTF}}}(t - nT_{\text{UHR-LTF}}) \sum_{r=0}^{N_{RU}-1} \frac{\alpha_r \sqrt{|K_r|}}{\sqrt{N_{SS,r,total}\Gamma_r^{\text{UHR-LTF}}}}$$
$$\sum_{k \in K_r} \sum_{u=0}^{N_{user,r}-1} \sum_{m=1}^{N_{SS,r,u}} ([Q_{k,u}]_{i_{TX},m} [A^k_{\text{UHR-LTF}}]_{(M_{r,u}+m),(n+1)} \text{UHR-LTF}_{k,u,m}$$
$$\exp(j2\pi k \Delta_{F,\text{UHR}}(t - nT_{\text{UHR-LTF-SYM}} - T_{GI,\text{UHR-LTF}} - T_{CS,\text{UHR}}(M_{r,u}+m))) \quad (38\text{-}31)$$

In a UHR TB PPDU, the time domain representation of the UHR-LTF waveform of user u in the r-th RU or MRU transmitted on the transmit chain i_{TX} shall be as described in Equation (38-32).

Copyright © 2025 IEEE. All rights reserved.
This is an unapproved IEEE Standards Draft, subject to change.

$$r^{(i_{TX})}_{\text{UHR-LTF},\,r,\,u}(t) = \frac{1}{\sqrt{N_{SS,\,r,\,u}\Gamma_r^{\text{UHR-LTF}}}} \sum_{n=0}^{N_{\text{UHR-LTF}}-1} w_{T_{\text{UHR-LTF}}}(t - nT_{\text{UHR-LTF}}) \sum_{k \in K_r} \sum_{m=1}^{N_{SS,\,r,\,u}} ([Q_{k,\,u}]_{i_{TX},\,m}[A^k_{\text{UHR-LTF}}]_{(M_{r,\,u}+m),\,(n+1)}\text{UHR-LTF}_{k,\,u,\,m} \exp(j2\pi k\Delta_{F,\,\text{UHR}}(t - nT_{\text{UHR-LTF-SYM}} - T_{GI,\,\text{UHR-LTF}} - T_{CS,\,\text{UHR}}(M_{r,\,u}+m)))) \quad (38\text{-}32)$$

In Equation (38-31) and Equation (38-32), the following notations are used.

$N_{user,\,r}$ is the number of UHR MU PPDU recipients (see Table 38-21 (Frequently used parameters)) in RU or MRU r.

$\text{UHR-LTF}_{k,\,u,\,m}$ is the UHR-LTF sequence applied on subcarrier k for spatial stream m of user u.

$\text{EHT-LTF}_{k,\,u,\,m} = \text{EHT-LTF}_k$ for all values of u and m.

α_r is defined in 38.3.14.4 (Transmitted signal).

$N_{\text{UHR-LTF}}$ is the number of OFDM symbols in the UHR-LTF field.

$T_{CS,\,\text{UHR}}(M_{r,\,u}+m)$ represents the cyclic shift for the spatial stream $M_{r,\,u}+m$ as defined in 38.3.15.2.2 (Cyclic shift for UHR modulated fields).

$Q_{k,\,u}$ are defined in 38.3.14.4 (Transmitted signal).

$A^k_{\text{UHR-LTF}}$ is defined in Equation (38-xx).

$M_{r,\,u}$ is given in Table 38-21 (Frequently used parameters) for UHR MU PPDU. For a UHR TB PPDU, it is given by the TXVECTOR parameter STARTING_STS_NUM.

K_r is the set of subcarrier indices for the tones in the RU or MRU r as defined in 38.3.14 (Mathematical description of signals).

$|K_r|$ and $\Gamma_r^{\text{UHR-LTF}}$ are defined after Equation (38-5) in 38.3.14.4 (Transmitted signal).

Other variables in Equation (38-31) and Equation (38-32) are defined in 38.3.13 (Timing-related parameters) and 38.3.14 (Mathematical description of signals).

38.3.15.11.2 UHR-LTF for DRUs

The UHR-LTF for DRUs field provides a means for the receiver to estimate the channel between the set of constellation mapper outputs and the receive chains. For DRU with a given DBW transmitted in a UHR TB PPDU, UHR-LTF for DRUs sequence depends on the DBW.

In hybrid DRU/RRU mode transmission (see 38.3.4 (Transmission of DRU)), the UHR-LTF for RRU is generated according to the rules specified in 38.3.15.11.1 (General), as if DRU is not present.

For DRUs in UHR TB PPDU with BW of 80/160/320 MHz, the maximum DBW is 80 MHz.

DRUs with DBW of 20 or 40 MHz in PPDU with a BW of 80 MHz or greater shall comply with the requirements specified in 38.3.4 (Transmission of DRU).

In a 20 MHz UHR TB PPDU transmission, the frequency domain sequence for UHR-LTF for DRUs located on subcarriers [-122:122] is given by Equation (38-33).

$$UHR\text{-}DLTF_{-122,122} = \quad (38\text{-}33)$$

Copyright © 2025 IEEE. All rights reserved.
This is an unapproved IEEE Standards Draft, subject to change.

{ 0, 0,-1,+1,-1,+1,-1,+1,+1,+1,-1,+1,+1,-1,+1,-1,-1,-1,-1,+1,-1,-1,+1,-1,-1,+1,+1,-1,-1,-1,-1,-1,-1,-1,+1, ...
+1,-1,+1,-1,+1,+1,-1,+1,-1,+1,-1,-1,-1,-1,-1,+1,+1,+1,-1,+1,+1,-1,-1,+1,+1,-1,+1,-1,+1,-1,+1,-1,-1,+1,-1, ...
+1,+1,+1,+1,-1,+1,+1,-1,+1,-1,-1,-1,+1,+1,-1,+1,-1,-1,+1,-1,-1,-1,-1,-1,-1,+1,-1,+1,-1,-1,+1,+1,-1,+1,+1, ...
-1,+1,+1,-1,+1,+1,-1,+1,-1,+1,-1,+1,-1,-1,+1,-1, 0, 0, 0,-1,+1,-1,+1,-1,-1,+1,-1,-1,-1,+1,-1,+1,-1,-1,-1, ...
+1,+1,+1,-1,+1,-1,-1,-1,-1,-1,-1,-1,-1,-1,-1,-1,+1,+1,-1,+1,-1,-1,-1,-1,+1,+1,+1,+1,+1,-1,-1,+1,-1,-1,+1, ...
+1,-1,-1,-1,-1,+1,-1,+1,+1,-1,-1,+1,+1,+1,-1,-1,+1,-1,-1,-1,-1,+1,-1,+1,+1,-1,-1,+1,-1,+1,+1,-1,+1,+1,-1, ...
+1,+1,-1,+1,+1,-1,+1,-1,+1,-1,-1,+1,+1,-1,-1,-1,-1,+1,+1,+1,-1,-1,-1,-1,+1,-1,-1,-1,+1,+1,+1,-1,+1, 0, 0 }

In a 40 MHz UHR TB PPDU transmission, the frequency domain sequence for UHR-LTF for DRUs located on subcarriers [-244:244] is given by Equation (38-34).

$$UHR\text{-}DLTF_{-244,244} = \tag{38-34}$$

{-1,+1,-1,-1,-1,+1,-1,-1,+1,+1,+1,-1,+1,+1,+1,+1,+1,+1,+1,-1,-1,+1,+1,-1,+1,-1,-1,+1,+1,-1,-1,+1, ...
-1,+1,-1,+1,+1,-1,+1,+1,+1,+1,-1,-1,+1,-1,-1,+1,+1,+1,-1,-1,-1,-1,-1,+1,+1,+1,+1,-1,+1,-1,-1,+1,-1, ...
+1,-1,+1,-1,+1,+1,+1,+1,+1,+1,-1,+1,-1,-1,+1,-1,-1,-1,-1,+1,-1,-1,-1,+1,-1,-1,+1,-1,-1,-1,-1,+1,-1, ...
+1,-1,+1,-1,+1,+1,-1,-1,-1,+1,+1,-1,-1,+1,+1,-1,-1,+1,-1,+1,-1,+1,-1,+1,+1,+1,+1,-1,-1,-1,-1,-1,-1, ...
-1,-1,-1,-1,+1,+1,+1,+1,+1,+1,+1,-1,-1,+1,-1,-1,+1,-1,-1,-1,-1,+1,+1,-1,-1,+1,-1,+1,-1,+1,-1,-1,+1, ...
-1,+1,+1,+1,+1,+1,+1,+1,+1,-1,-1,+1,-1,-1,+1,-1,+1,+1,-1,+1,+1,+1,+1,+1,-1,+1,+1,+1,-1,+1,-1,+1, ...
+1,-1,-1,-1,-1,+1,-1,-1,+1,-1,+1,+1,+1,-1,-1,-1,-1,+1,-1,-1,+1,+1,-1,+1,+1,+1,+1,+1,+1,+1,+1,+1,-1, ...
+1,+1,+1,+1,-1,-1,+1,-1,+1,-1,+1,-1, 0, 0, 0, 0, 0,-1,-1,-1,-1,+1,-1,+1,-1,-1,+1,-1,+1,+1,-1,-1,+1,+1,-1, ...
+1,+1,+1,-1,+1,+1,-1,+1,+1,-1,-1,-1,-1,+1,-1,-1,-1,-1,-1,+1,+1,-1,+1,+1,+1,+1,-1,-1,-1,-1,-1,-1,-1,+1, ...
-1,-1,+1,-1,+1,+1,+1,-1,+1,-1,+1,-1,-1,-1,-1,+1,-1,+1,+1,-1,+1,+1,+1,-1,-1,-1,-1,+1,+1,-1,+1,+1, ...
+1,+1,-1,-1,-1,+1,+1,+1,+1,-1,-1,+1,-1,-1,-1,-1,+1,-1,+1,-1,-1,+1,-1,-1,-1,-1,+1,-1,+1,-1,+1,+1, ...
+1,-1,-1,+1,-1,+1,+1,-1,-1,-1,+1,-1,+1,-1,+1,-1,-1,-1,+1,+1,+1,-1,-1,-1,-1,+1,+1,+1,-1,+1,-1,+1,+1, ...
+1,-1,-1,-1,+1,+1,+1,+1,-1,-1,+1,+1,-1,+1,-1,-1,+1,+1,-1,+1,-1,-1,-1,+1,+1,+1,-1,+1,+1,-1,+1,-1, ...
+1,-1,-1,+1,+1,+1,+1,-1,+1,-1,+1,+1,+1,+1,-1,-1,-1,-1,-1,+1,-1,-1,-1,-1,+1,+1,+1,+1,-1,-1,+1,+1,-1, ...
+1,+1,+1,+1,-1,+1,-1,+1,+1,-1,+1,+1,-1,-1,-1,-1,-1,+1,-1,+1,+1,+1,-1,-1,+1,-1 }

In an 80 MHz UHR TB PPDU transmission with the highest 20 MHz been punctured, the frequency domain sequence for UHR-LTF for DRUs located on subcarriers [-500:253] is given by Equation (38-35) if DBW is 60 MHz.

$$UHR\text{-}DLTF_{-500,253} = \tag{38-35}$$

{0,+1,+1,-1,-1,-1,+1, 0,+1,+1,-1,-1,+1,-1, 0,-1,+1,-1,-1,+1,-1, 0,+1,-1,+1,-1,-1,+1, 0,+1,-1,-1,-1,-1, ...
+1, 0,-1,-1,+1,-1,+1,+1,+1,+1,+1,-1,-1,+1,-1,+1,+1,-1,-1,+1,-1,-1,+1,+1,-1,+1,+1,+1,+1,+1,-1,-1,-1,-1, ...
+1,-1,+1,-1,-1,-1,+1,+1,-1,+1,-1,+1,+1,+1,+1,+1,-1,+1,+1,+1,+1,-1,+1,-1,+1,-1,+1,-1,+1,+1,+1,-1,-1,-1, ...
+1,-1,+1,-1,+1,+1,-1,-1,-1,-1,-1,-1,+1,+1,-1,-1,+1,+1,+1,-1,+1,+1,-1,-1,+1,+1,+1,-1,+1,+1,-1,+1,+1,-1, ...
+1,+1,-1,+1,-1,+1,-1,-1,+1,-1,-1,-1,-1,+1,+1,+1,+1,+1,+1,-1,-1,-1,-1,+1,-1,+1,+1,+1,-1,+1,-1,+1,-1,-1, ...
+1,+1,-1,-1,+1,-1,-1,+1,-1,+1,-1,-1,+1,-1,+1,+1,+1,+1,-1,+1,+1,-1,-1,-1,-1,+1,-1,-1,+1,+1,-1,+1,+1,+1, ...
-1,-1,+1,+1,-1,-1,+1,+1,+1,-1,+1,+1,-1,+1,+1,-1,-1,+1,-1,+1,-1,+1,-1,+1,+1,+1,-1,+1,+1,-1,-1,-1,+1,+1, ...
+1,-1,-1,+1,-1,-1,+1,+1,+1,-1,+1,-1,+1,-1,+1,-1,-1,+1,-1,-1,-1,-1,-1,+1,+1,-1,-1,+1,-1,+1,-1,-1,+1,-1, ...
+1,+1,-1,-1,+1,+1,+1,+1,-1,-1,+1,+1,-1,-1,-1,-1,-1,-1,-1,+1,-1,-1,-1,-1,-1,-1,+1,+1,-1,-1,-1,-1,+1,+1, ...
+1,+1,+1,+1,-1,-1,+1,+1,+1,+1,+1,-1,-1,-1,-1,-1,+1,+1,-1,+1,-1,-1,+1,+1,-1,-1,+1,+1,-1,+1,+1,+1,+1,+1, ...
+1,+1,+1,-1,-1,+1,+1,+1,-1,+1,-1,+1,+1,+1,-1,-1,+1,-1,+1,-1,+1,-1,-1,+1,-1,-1,-1,-1,+1,-1,-1,-1,+1,+1, ...
+1,-1,+1,+1,+1,-1,-1,+1,-1,+1,-1,+1,+1,+1,-1,-1,-1,+1,-1,-1,-1,-1,+1,-1,+1,+1,-1,+1,+1,-1,+1,-1,+1,-1, ...
-1,-1,-1,-1,-1,-1,+1,-1,-1,+1,-1,+1,+1,-1,+1,+1,+1,-1,+1,+1,+1,+1,-1,+1,+1,+1,-1,+1,-1,-1,-1,-1,+1,-1,+1,+1, ...
-1,+1,+1,-1,-1,-1,+1,-1,+1,-1,+1,-1,+1,+1,-1,+1,-1,-1,-1,+1,+1,+1,-1,-1,-1,+1,+1,+1,-1,-1,+1,+1,+1,-1, ...
+1,+1,+1,+1,+1,-1,+1, 0,-1,+1,+1,+1,-1,-1, 0,+1,+1,+1,+1,-1,+1, 0, 0, 0, 0, 0, 0, 0, 0,+1,+1,-1,-1,+1, ...
+1, 0,+1,+1,+1,-1,+1,+1, 0,+1,-1,-1,-1,+1,+1,+1,-1,-1,-1,-1,+1,-1,-1,+1,+1,+1,+1,+1,-1,+1,+1,-1,-1,+1, ...
-1,+1,+1,+1,+1,+1,+1,+1,-1,-1,+1,+1,+1,-1,-1,-1,-1,-1,+1,+1,-1,+1,+1,-1,+1,+1,+1,+1,-1,-1,-1,+1,+1,+1, ...

Copyright © 2025 IEEE. All rights reserved.
This is an unapproved IEEE Standards Draft, subject to change.

-1,-1,-1,-1,-1,+1,+1,-1,+1,-1,+1,+1,+1,-1,+1,+1,-1,-1,+1,-1,+1,+1,+1,+1,-1,-1,+1,-1,-1,+1,+1,+1,+1,+1, ...
+1,+1,-1,+1,+1,+1,-1,+1,-1,+1,+1,-1,-1,-1,+1,-1,+1,+1,+1,-1,+1,-1,-1,-1,-1,-1,-1,-1,-1,-1,+1,+1,+1, ...
-1,-1,-1,-1,+1,+1,-1,+1,-1,+1,-1,+1,+1,+1,-1,+1,-1,+1,+1,-1,+1,-1,+1,-1,+1,+1,-1,-1,-1,-1,-1,-1,+1, ...
-1,-1,-1,+1,-1,+1,+1,+1,+1,+1,+1,-1,-1,-1,+1,-1,+1,+1,-1,-1,-1,+1,-1,+1,-1,-1,-1,+1,+1,+1,+1,-1,+1,+1,-1, ...
0,+1,-1,-1,-1,+1,+1, 0,-1,-1,-1,+1,+1,-1, 0,-1,+1,+1,+1,+1,-1, 0,-1,-1,-1,-1,-1,-1, 0,+1,+1,+1,-1,-1, ...
+1, 0, 0, 0, 0, 0}

In an 80 MHz UHR TB PPDU transmission, the frequency domain sequence for UHR-LTF for DRUs located on subcarriers [-500:500] is given by Equation (38-36).

$$UHR\text{-}DLTF_{-500,500} = \tag{38-36}$$

{0,-1,+1,-1,+1,+1,+1,+1,-1,+1,+1,-1,-1,-1,+1,+1,-1,-1,-1,+1,-1,+1,-1,+1,-1,+1,-1,+1,-1, ...
+1,+1,-1,-1,+1,+1,+1,+1,+1,-1,+1,+1,-1,-1,-1,+1,+1,+1,-1,+1,+1,+1,+1,-1,-1,+1,+1,-1,-1, ...
+1,-1,-1,-1,-1,-1,+1,+1,+1,-1,+1,+1,-1,-1,+1,-1,-1,+1,-1,-1,-1,+1,-1,+1,+1,-1,-1,-1,-1, ...
-1,-1,-1,-1,-1,-1,+1,+1,+1,-1,-1,+1,+1,-1,+1,-1,-1,-1,+1,-1,+1,+1,+1,+1,-1,-1,-1,+1,-1, ...
-1,+1,+1,-1,+1,-1,-1,-1,-1,-1,+1,+1,-1,+1,-1,-1,-1,+1,+1,-1,-1,+1,-1,-1,+1,+1,+1,-1,+1, ...
-1,-1,-1,-1,+1,+1,+1,-1,-1,+1,+1,-1,+1,+1,+1,+1,-1,-1,+1,+1,-1,-1,+1,-1,-1,+1,+1,-1,+1, ...
-1,-1,-1,+1,-1,+1,-1,-1,-1,+1,-1,+1,-1,-1,-1,-1,+1,+1,-1,-1,-1,+1,-1,+1,+1,-1,+1,-1,+1, ...
-1,+1,-1,-1,-1,+1,+1,+1,+1,+1,-1,-1,-1,+1,-1,+1,+1,-1,-1,-1,+1,-1,-1,+1,+1,+1,+1,-1,-1, ...
-1,+1,-1,-1,-1,-1,+1,+1,-1,-1,-1,-1,-1,-1,+1,+1,+1,+1,+1,+1,+1,+1,+1,+1,+1,-1,+1,+1,-1,+1, ...
-1,+1,-1,-1,+1,+1,+1,+1,-1,-1,+1,+1,+1,+1,+1,-1,+1,-1,+1,-1,-1,+1,-1,+1,+1,+1,+1,+1,-1, ...
+1,-1,+1,-1,-1,-1,+1,-1,-1,-1,+1,-1,-1,+1,-1,-1,-1,-1,+1,+1,+1,-1,+1,-1,+1,+1,-1,-1,+1, ...
+1,-1,-1,+1,-1,+1,-1,-1,-1,-1,-1,-1,+1,-1,-1,+1,-1,-1,-1,-1,-1,-1,+1,-1,+1,+1,+1,+1, ...
+1,+1,-1,-1,+1,+1,+1,+1,-1,-1,-1,-1,+1,+1,+1,+1,-1,-1,-1,-1,+1,+1,-1,+1,+1,-1,-1,+1, ...
-1,+1,-1,+1,+1,-1,-1,-1,-1,+1,+1,+1,+1,+1,-1,-1,+1,-1,+1,-1,-1,+1,-1,+1,+1,-1,+1,-1,+1, ...
-1,-1,+1,+1,-1,+1,-1,-1,-1,-1,-1,-1,-1,-1,-1,+1,-1,+1,+1,+1,-1,-1,+1,-1,-1,-1,-1,+1,-1,+1, ...
+1,+1,-1,+1,+1,+1,-1,-1,-1,+1,+1,+1,+1,-1,+1,-1,+1,-1,+1,-1,+1,+1,+1,-1,+1,-1,-1,-1,-1,+1, ...
-1,-1,+1,-1,-1,-1,+1,-1,-1,+1,-1,-1,+1,+1,+1,-1,-1,-1,+1,+1,+1,0,0,0,0,0,0,0,0, ...
0,0,0,0,0,0,0,0,0,0,0,0,0,0,0,0,0,0,0,0,0,0,+1,-1,-1,-1,-1, ...
+1,-1,+1,-1,+1,-1,-1,+1,-1,+1,-1,-1,+1,+1,-1,+1,+1,-1,+1,-1,+1,+1,-1,+1,-1,+1,+1,+1,-1, ...
+1,+1,-1,-1,-1,+1,+1,-1,-1,-1,+1,+1,-1,+1,-1,+1,-1,-1,+1,+1,+1,-1,+1,+1,-1,+1,-1,+1,+1, ...
+1,-1,+1,-1,+1,-1,+1,-1,+1,+1,-1,-1,-1,-1,-1,-1,+1,+1,-1,-1,+1,+1,+1,+1,-1,-1,+1,+1,+1, ...
-1,+1,+1,-1,-1,-1,+1,+1,+1,-1,-1,+1,-1,+1,+1,-1,-1,-1,-1,+1,-1,-1,-1,-1,-1,+1,-1,-1,-1, ...
-1,-1,+1,+1,+1,+1,-1,-1,-1,-1,+1,+1,-1,+1,-1,-1,+1,+1,+1,-1,+1,-1,-1,+1,+1,+1,-1,+1,-1, ...
-1,+1,+1,+1,-1,+1,+1,-1,+1,+1,-1,+1,+1,+1,-1,-1,-1,-1,+1,-1,+1,+1,+1,+1,-1,+1,-1,+1,-1, ...
-1,+1,+1,+1,-1,+1,-1,-1,+1,+1,-1,-1,+1,-1,+1,+1,-1,-1,+1,+1,+1,+1,+1,+1,+1,-1,-1,+1,+1, ...
+1,+1,+1,+1,-1,-1,+1,+1,-1,-1,+1,+1,+1,+1,-1,-1,+1,+1,+1,-1,-1,-1,-1,-1,-1,+1,+1,+1,+1, ...
-1,-1,-1,+1,+1,+1,-1,-1,+1,+1,+1,-1,+1,-1,+1,-1,+1,-1,-1,+1,-1,+1,-1,+1,-1,+1,+1,+1,+1, ...
-1,+1,+1,-1,-1,-1,-1,+1,-1,-1,+1,-1,-1,+1,-1,-1,-1,-1,+1,-1,+1,-1,+1,-1,-1,-1,+1,-1,+1, ...
-1,-1,-1,-1,-1,-1,-1,-1,-1,-1,+1,-1,-1,-1,+1,+1,+1,+1,+1,+1,-1,-1,+1,-1,+1,-1,-1,+1,-1,+1, ...
-1,-1,+1,-1,+1,+1,+1,+1,+1,-1,-1,-1,-1,+1,+1,+1,-1,-1,+1,+1,+1,+1,+1,+1,+1,-1,-1,+1,+1, ...
-1,-1,+1,+1,-1,-1,-1,+1,+1,-1,+1,+1,-1,-1,+1,-1,-1,-1,-1,+1,-1,+1,+1,+1,-1,-1,+1,+1,-1,-1, ...
+1,+1,-1,+1,-1,-1,-1,+1,+1,+1,-1,+1,-1,+1,-1,-1,+1,-1,-1,+1,-1,+1,-1,+1,-1,+1,+1,-1,+1,-1,-1, ...
-1,-1,+1,+1,-1,+1,+1,+1,+1,-1,+1,+1,+1,+1,+1,+1,-1,-1,-1,+1,-1,-1,-1,-1,-1,-1,+1,-1,-1,-1, ...
-1,-1,+1,+1,-1,+1,-1,+1,+1,-1,-1,-1,-1,-1,+1,-1,-1,+1,+1,+1,-1,-1,+1,+1,-1,+1,+1,-1,-1, ...
+1,+1,+1,+1,-1,-1,-1,-1,-1,+1,-1,-1,-1,+1,-1}

38.3.15.11.3 UHR-LTF for ELR PPDU

In a UHR ELR PPDU, the transmitter provides training for one spatial stream used for the transmission of the PSDU(s) in four 52-tone RRUs. For each subcarrier in the four 52-tone RUs, the MIMO channel that can

Copyright © 2025 IEEE. All rights reserved.
This is an unapproved IEEE Standards Draft, subject to change.

be estimated is an $N_{RX} \times 1$ matrix. A UHR ELR transmission contains two 2× UHR-LTF symbols, where data tones of each 2× UHR-LTF symbol are multiplied by entries belonging to a matrix $P_{\text{UHR-LTF}}$, to enable channel estimation at the receiver. The pilot tones of each 2× UHR-LTF symbol are multiplied by entries belonging to a matrix $R_{\text{UHR-LTF}}$. $P_{\text{UHR-LTF}}$ is defined such that each modulated spatial stream in an RU is active on all subcarriers in that RU for which the UHR-LTF sequence takes a nonzero value. A 3dB power boost shall be applied on UHR-LTF field in UHR ELR PPDU.

A UHR ELR PPDU supports 2× UHR-LTF and GI_TYPE = 1.6 µs GI only, with $T_{\text{UHR-LTF}} = T_{\text{UHR-LTF-2X}}$ defined in Table 38-18 (Timing-related constants).

A UHR ELR transmission uses the 2× UHR-LTF sequence in 20 MHz, but only populates subcarriers corresponding to four 52-tone RUs in 20 MHz. For non-populated subcarriers the values of 2× UHR-LTF sequence are replaced by zero.

In a UHR ELR PPDU, the time domain representation of the UHR-LTF waveform transmitted on the transmit chain i_{TX} shall be as described in Equation (38-37).

$$r^{(i_{TX})}_{\text{UHR-LTF}}(t) = \frac{1}{\sqrt{\sum_{r=0}^{N_{RU}-1} \alpha_k^2 |K_r|}} \sum_{n=0}^{N_{\text{UHR-LTF}}-1} w_{T_{\text{UHR-LTF}}}(t - nT_{\text{UHR-LTF}}) \sum_{r=0}^{N_{RU}-1} \frac{\alpha_r \sqrt{|K_r|}}{\sqrt{\Gamma_r^{\text{UHR-LTF}}}} \tag{38-37}$$

$$\eta_{\text{UHR-LTF}} \sum_{k \in K_r} ([Q_{k,u}]_{i_{TX},1} [A^k_{\text{UHR-LTF}}]_{1,n+1} \text{UHR-LTF}_k$$

$$\exp(j2\pi k \Delta_{F,\text{UHR}}(t - nT_{\text{UHR-LTF-SYM}} - T_{GI,\text{UHR-LTF}} - T_{CS,\text{UHR}}(1))))$$

where $\eta_{\text{UHR-LTF}}$ is defined in Equation (38-4) and is $\sqrt{2}$ for a UHR ELR PPDU.

38.3.15.12 ELR-SIG

38.3.15.12.1 General

The ELR-SIG field carries information necessary to interpret a(#8842) UHR ELR PPDU. The integer fields of the ELR-SIG field are transmitted in unsigned binary format, LSB first, where the LSB is in the lowest numbered bit position.

Copyright © 2025 IEEE. All rights reserved.
This is an unapproved IEEE Standards Draft, subject to change.

38.3.15.12.2 Content

The ELR-SIG field for a UHR ELR PPDU contains the fields listed in Table 38-41 (ELR-SIG field of a UHR ELR PPDU).

Table 38-41—ELR-SIG field of a UHR ELR PPDU

Two parts of ELR-SIG	Bit	Field	Number of bits	Description
ELR-SIG-1	B0	ELR Version Identifier	1	Differentiate between different ELR versions. Set to 0 for UHR ELR PPDU. Value 1 is Validate.
	B1	UL/DL	1	Indicates whether the UHR ELR PPDU is sent in UL or DL. Set to the TXVECTOR parameter UPLINK_FLAG. A value of 1 indicates the UHR ELR PPDU is addressed to an AP. A value of 0 indicates the UHR ELR PPDU is addressed to a non-AP STA.
	B2	MCS	1	Indicates the MCS used for modulating the ELR-Data field: Set to 0 for UHR MCS 0, Set to 1 for UHR MCS 1.(#4064)
	B3	Coding	1	Indicates whether BCC or LDPC is used: Set to 0 for BCC. Set to 1 for LDPC with nominal code-word length of 648, 1296 or 1944.(#4065)
	B4–B12	Length	9	Indicates the number of ELR-Data symbols. Set to a value that is the number of ELR-Data symbols minus 1.
	B13	LDPC Extra OFDM Symbol	1	Indicates the presence of the LDPC extra symbol: Set to 1 if an LDPC extra symbol is present. Set to 0 if an LDPC extra symbol is not present.(#4066)
	B14–B17	CRC	4	CRC for bits 0–13 of the ELR-SIG-1 field. The CRC computation uses the same polynomial as that in 27.3.11.7.3 (CRC computation).
	B18–B23	Tail	6	Used to terminate the trellis of the convolutional decoder. Set to 0.
ELR-SIG-2	B0–B10	STA-ID	11	Set to a value of the TXVECTOR parameter STA-ID (see 35.11.1.1 (STA_ID)).

Copyright © 2025 IEEE. All rights reserved.
This is an unapproved IEEE Standards Draft, subject to change.

Table 38-41—ELR-SIG field of a UHR ELR PPDU *(continued)*

Two parts of ELR-SIG	Bit	Field	Number of bits	Description
	B11-B13	Disregard	3	Set to all 1s and treat as Disregard.
	B14–B17	CRC	4	CRC for bits 0–13 of the ELR-SIG-2 field. The CRC computation uses the same polynomial as that in 27.3.11.7.3 (CRC computation).
	B18–B23	Tail	6	Used to terminate the trellis of the convolutional decoder. Set to 0.

38.3.15.12.3 Encoding and modulation

For a UHR ELR PPDU, the ELR-SIG field is composed of two parts, the ELR-SIG-1 and ELR-SIG-2 subfields, each containing 24 uncoded data bits as described in Table 38.3.15.12.2 (Content). The ELR-SIG-1 field is transmitted before the ELR-SIG-2 field. The data bits of the ELR-SIG OFDM symbols shall be BCC encoded separately for each of the OFDM symbols at rate R=1/2, interleaved, mapped to a BPSK constellation, and have pilots inserted following steps described in 38.3.10.11 (Construction of ELR-SIG).

ELR-SIG is transmitted using the same tone plan, same frequency domain duplication, and phase rotation as the Data field in UHR ELR PPDU, as shown in 38.3.16.9 (Frequency domain duplication).

The time domain waveform for the ELR-SIG field of a UHR ELR PPDU, transmitted on transmit chain i_{TX}, $1 \le i_{TX} \le N_{TX}$, shall be as specified in Equation (38-38).

$$r_{\text{ELR-SIG}}^{i_{TX}}(t) \tag{38-38}$$

$$= \frac{1}{2\sqrt{|K_{RU52_0}|}} \sum_{n=0}^{1} w_{T_{\text{SYM,ELR-SIG}}}(t - nT_{\text{SYM,ELR-SIG}})$$

$$\sum_{r=0}^{3} \sum_{k \in K_{\text{RU52}_r}} ([Q_{k,u}]_{i_{TX},1}(D_{k,n,r} + p_{n+6}P_n^k)\exp(j2\pi\Delta_{F,\text{UHR}}(t - nT_{\text{SYM,ELR-SIG}} - T_{GI,\text{ELR-SIG}})))$$

(#9972)where

$T_{\text{SYM,ELR-SIG}}$ is defined in Table 38-18 (Timing-related constants).(#4068)(#9972)

K_{RU52_r} is the data and pilot subcarrier index sets for the *r*-th 52-tone RU and is defined in Table 27-8 (Data and pilot subcarrier indices for RUs in a 20 MHz HE PPDU and in a non-OFDMA 20 MHz HE PPDU(11ax)) based on the PPDU BW, which is 20 MHz.

p_n is defined in 17.3.5.10 (OFDM modulation).(#4068)

P_n^k is the pilot mapping for subcarrier *k* for symbol *n* as defined in Equation (27-102).

Copyright © 2025 IEEE. All rights reserved.
This is an unapproved IEEE Standards Draft, subject to change.

$T_{GI,\text{ELR-SIG}}$ is the guard interval duration as defined in Table 38-18 (Timing-related constants).

$Q_{k,u}$ is defined in 38.3.14.4 (Transmitted signal) and $u = 0$ since UHR ELR PPDU supports only one user.

$D_{k,n,r}$ is the transmitted constellation at subcarrier k in the r-th 52-tone RU of the n-th OFDM symbol and is defined by Equation (38-39)

$$D_{k,n,r} = \begin{cases} 0, & k \in K_{\text{R52}_r} \\ d_{M_r(k),n,r}, & \text{otherwise} \end{cases} \tag{38-39}$$

where K_{R52_r} is defined in Table 27-40 (Pilot indices for 52-tone RU transmission) based on the PPDU BW, which is 20 MHz.

$$d_{k,n,2} = d_{k,n,1}, \quad 0 \le k \le 47$$

$$d_{k,n,3} = \begin{cases} -d_{k,n,1}, & 0 \le k \le 23 \\ d_{k,n,1}, & 23 < k \le 47 \end{cases}$$

$$d_{k,n,4} = \begin{cases} d_{k,n,1}, & 0 \le k \le 23 \\ -d_{k,n,1}, & 23 < k \le 47 \end{cases}$$

where $n = 0, 1$

$M_r(k)$ is defined in Equation (38-40).(#4068)

$$M_r(k) = \left|\{k' \mid (K_{\text{RU52}_r,min} \le k' \le k)\} \cap K_{\text{RU52}_r}\right| - 1 - \left|\{k' \mid (K_{\text{RU52}_r,min} \le k' \le k)\} \cap K_{\text{R52}_r}\right| \tag{38-40}$$

where

$$K_{\text{RU52}_r,min} = \begin{cases} -121, & r = 0 \\ -68, & r = 1 \\ 17, & r = 2 \\ 70, & r = 3 \end{cases} \tag{38-41}$$

NOTE— $M_r(k)$ translates a subcarrier index ($k \in K_{\text{RU52}_r}$) into the index of data symbols in a transmission over r-th 52-tone RU, ($0 \le M_r(k) \le 47$). The subcarrier index k for the data subcarrier is first offset by the minimum value of subcarrier index (for the lower edge subcarrier) in this RU and number of the unoccupied tones, and then subtracted by the number of pilot subcarriers falling in between the data subcarrier and the edge subcarrier.

Copyright © 2025 IEEE. All rights reserved.
This is an unapproved IEEE Standards Draft, subject to change.

38.3.15.13 UHR preamble of preamble punctured UHR MU PPDU and UHR TB PPDU

The definitions and behavior of preamble puncturing for a UHR MU PPDU are the same as those specified for an EHT MU PPDU, see 36.3.12.11 (EHT preamble of preamble punctured EHT MU PPDU).

38.3.16 Data field

38.3.16.1 SERVICE field

The SERVICE field of the UHR DATA field is shown Table 38-42 (SERVICE field)..

Table 38-42—SERVICE field

Bits	Field	Description
B0-B10	Scrambler Initialization	Set to 0
B11-B15	Reserved	Set to 0

38.3.16.2 Scrambler

The SERVICE field, PSDU, and pre-FEC PHY padding of the Data field shall be scrambled by the scrambler, as defined in 36.3.13.2(EHT PHY DATA scrambler and descrambler).

38.3.16.3 Coding

38.3.16.3.1 General

The Data field shall be encoded using either BCC, if allowed, defined in 38.3.16.3.2 (BCC coding) or the LDPC code defined in 38.3.16.3.3 (LDPC coding). For a UHR MU PPDU and a UHR ELR PPDU, the coding type is selected by the Coding field in UHR-SIG and ELR-SIG-1, respectively, as defined in 38.3.15.9 (UHR-SIG) and 38.3.15.12 (ELR-SIG).

When conducting BCC FEC encoding for a UHR MU PPDU or a UHR ELR PPDU, the number of encoders is always 1.

38.3.16.3.2 BCC coding

Support for BCC coding is limited to less than or equal to four spatial streams per user, UHR-MCSs 0 to 9, UHR-MCS 15 (BPSK-DCM with N_{ss}=1), UHR-MCS 17, 19, 20, 23 for equal modulation, and RU or MRU or DRU that is the same size as or smaller than a 242-tone RU. BCC support is mandatory (for both transmit and receive) for RU or MRU or DRU that is the same size or smaller than a 242-tone RU/DRU.

BCC encoding process is described in 27.3.12.5.1 (BCC coding and puncturing).

38.3.16.3.3 LDPC coding

When using LDPC, UHR ELR only supports codeword block lengths up to 1944. For a UHR ELR PPDU using LDPC coding to encode the Data field, the LDPC code described in 19.3.11.7 (LDPC codes) shall be

Copyright © 2025 IEEE. All rights reserved.
This is an unapproved IEEE Standards Draft, subject to change.

used, except that the LDPC PPDU encoding process is defined in 38.3.16.3.7 (Encoding process for a UHR ELR PPDU).

For a UHR PPDU using LDPC coding on the Data field, the LDPC coding process described in 19.3.11.7 (LDPC codes) shall be used with the updated LDPC parameters table Table 38-43 (LDPC parameters).

Table 38-43—LDPC parameters

Coding Rate (R)	LDPC information block length (bits)	LDPC codeword block length (bits)
1/2	1944	3888
1/2	972	1944
1/2	648	1296
1/2	324	648
2/3	2592	3888
2/3	1296	1944
2/3	864	1296
2/3	432	648
3/4	2916	3888
3/4	1458	1944
3/4	972	1296
3/4	486	648
5/6	3240	3888
5/6	1620	1944
5/6	1080	1296
5/6	540	648

NOTE—This table is updated to support the 3888-bit LDPC codes added in UHR.

38.3.16.3.4 UHR PPDU padding process

UHR MU PPDU and UHR TB PPDU follow the EHT PPDU padding process defined in 36.3.13.3.4.

UHR ELR PPDU follow the pre-FEC padding process defined in Equation (38.3.16.3.7).

38.3.16.3.5 Encoding process for a UHR MU PPDU

The encoding process described in 36.3.13.3.5 (Encoding process for an EHT MU PPDU) shall be applied to UHR SU transmission and MU transmission with the following modification:

$N_{DBPS,\,short,\,u} = N_{CBPS,\,short,\,u} \cdot R_u$, in which R_u is the coding rate for the u-th user

Copyright © 2025 IEEE. All rights reserved.
This is an unapproved IEEE Standards Draft, subject to change.

$N_{CBPS,short,u} = N_{SD,short,u} \sum_{m=1}^{N_{ss,r,u}} N_{BPSCS,m,u}$, in which $N_{SD,short,u}$ is the $N_{SD,short}$ value corresponding to the occupied RU or MRU size of the u-th user, $N_{SS,r,u}$ and $N_{BPSCS,m,u}$ are defined in Table 38-21 (Frequently used parameters).

The parameter $N_{SD,short}$ values for different RU and MRU sizes are shown in Table 36-46 (NSD,short values for EHT-MCS values from 0 to 13 and 15).

When IM is enabled, the value of $N_{SD,short,u}$ is defined in Table 38-44 (Values of NSD,short,u when IM is enabled).

Table 38-44—Values of $N_{SD,short,u}$ when IM is enabled

RU size	$N_{SD,short,u}$
242-tone RU	48
484-tone RU	108
996-tone RU	216
2×996-tone RU	444
4×996-tone RU	888

38.3.16.3.6 Encoding process for a UHR TB PPDU

Editor's Note: It is a placeholder subclause

38.3.16.3.7 Encoding process for a UHR ELR PPDU

In a UHR ELR PPDU transmission, the transmitter first computes the initial number of OFDM symbols, $N_{\mathrm{SYM,init}}$, using Equation (38-42).

$$N_{\mathrm{SYM,init}} = \left\lceil \frac{8 \cdot \mathrm{APEP_LENGTH} + N_{tail} + N_{service}}{N_{DBPS}} \right\rceil \tag{38-42}$$

where

N_{tail} is the number of tails bits per encoder as defined in Table 36-18 (Timing-related constants).

$N_{service}$ is the number of tails bits in the SERVICE field as defined in Table 36-18 (Timing-related constants).

N_{DBPS} is the number of data bits per OFDM symbol as defined in Table 38-21 (Frequently used parameters).

When LDPC encoding is used, the parameters N_{pld} and N_{avbits} are computed using Equation (38-43) and Equation (38-44), respectively.

Copyright © 2025 IEEE. All rights reserved.
This is an unapproved IEEE Standards Draft, subject to change.

$$N_{pld} = N_{SYM,\,init} \cdot N_{DBPS} \tag{38-43}$$

$$N_{avbits} = N_{SYM,\,init} \cdot N_{CBPS} \tag{38-44}$$

When LDPC encoding is used, continue LDPC encoding process as in 19.3.11.7.5 (LDPC PPDU encoding process) starting with the parameters N_{pld} and N_{avbits}. If the following condition in step d) of LDPC encoding process as described in 19.3.11.7.5 (LDPC PPDU encoding process) is met:

$$(N_{punc} > 0.1 \times N_{CW} \times L_{LDPC} \times (1-R)) \text{ AND } \left(N_{shrt} < 1.2 \times N_{punc} \times \frac{R}{1-R}\right) \text{ is true OR if}$$

$$N_{punc} > 0.3 \times N_{CW} \times L_{LDPC} \times (1-R) \text{is true,}$$

where N_{punc}, N_{CW}, L_{LDPC}, and N_{shrt} are the LDPC encoding parameters as defined in 19.3.11.7.5 (LDPC PPDU encoding process), and R is the coding rate, then the LDPC Extra Symbol Segment field of ELR-SIG-1 shall be set to 1, N_{avbits} shall be increased according to Equation (38-45), and N_{punc} shall be recomputed as Equation (19-40).

$$N_{avbits} = N_{avbits} + N_{CBPS} \tag{38-45}$$

Then update the N_{SYM} values using Equation (38-46).

$$N_{SYM} = N_{SYM,\,init} + 1 \tag{38-46}$$

If the condition mentioned above in step d) of LDPC encoding process as described in 19.3.11.7.5 (LDPC PPDU encoding process) is not met when LDPC encoding is used, or the UHR ELR PPDU is BCC encoded, then the LDPC Extra Symbol Segment field of ELR-SIG-1 shall be set to 0, and N_{SYM} value shall be updated by Equation (38-47).

$$N_{SYM} = N_{SYM,\,init} \tag{38-47}$$

The number of pre-FEC padding bits is computed as in Equation (38-48).

$$N_{PAD,\,\text{Pre-FEC}} = N_{SYM,\,init} N_{DBPS} - 8 \cdot \text{APEP_LENGTH} - N_{tail} - N_{service} \tag{38-48}$$

Among the pre-FEC padding bits, the MAC delivers a PSDU that fills the available octets in the Data field of the UHR ELR PPDU, toward the end of initial last OFDM symbol represented by $N_{SYM,\,init}$ encoded by LDPC, and toward the end of last OFDM symbol represented by N_{SYM} encoded by BCC. The PHY then determines the number of padding bits to add and appends them to the PSDU. The number of pre-FEC padding bits added by PHY will always be 0 to 7. The procedure is defined in Equation (38-49) and Equation (38-50).

$$N_{PAD,\,\text{Pre-FEC},\,MAC} = 8 \cdot \left\lfloor \frac{N_{PAD,\,\text{Pre-FEC}}}{8} \right\rfloor \tag{38-49}$$

$$N_{PAD,\,\text{Pre-FEC},\,PHY} = N_{PAD,\,\text{Pre-FEC}} \bmod 8 \tag{38-50}$$

Copyright © 2025 IEEE. All rights reserved.
This is an unapproved IEEE Standards Draft, subject to change.

38.3.16.4 Stream parser

After scrambling, coding, puncturing, and post-FEC padding, the coded bits of user *u* are processed in groups of $N_{\mathrm{CBPS,u}}$ bits. Each of these groups is rearranged into $N_{\mathrm{SS,u}}$ blocks for $N_{\mathrm{SS,u}}$ spatial streams, respectively, where spatial stream *m* takes $N_{\mathrm{CBPS,m,u}}$ bits for m=1,…, $N_{\mathrm{SS,u}}$. This operation is referred to as *stream parsing* and is described in this subclause.

The description is given in terms of an SU transmission, where the user index *u* is not present in the subscript of the variables. For MU transmissions, the parsing operations are carried out in the same way per user.

The number of bits assigned to a single axis (real or imaginary) of each constellation point in spatial stream *m* is denoted by Equation (38-51).

$$s_m = \begin{cases} \max\left(1, \frac{N_{BPSCS}}{2}\right), & \text{for equal modulation} \\ \frac{N_{BPSCS}}{2}, & \text{for unequal modulation} \end{cases} \tag{38-51}$$

The sum of these s_{m} over all N_{SS} streams, $\sum_{m=1}^{N_{ss}} s_m$ is denoted by *S*.

The consecutive encoded bits are first divided into groups, each of which consists of N_{CBPS} bits. The N_{CBPS} bits of each group are then assigned to N_{SS} spatial streams in a round robin fashion. In the assignment to spatial stream *m*, s_{m} bits are assigned. Input bit *k* to spatial stream *m* shall be bit *i* of the group, where

$$i = S \cdot \left\lfloor \frac{k}{s_m} \right\rfloor + \sum_{n=1}^{m-1} s_n + k \cdot \mathrm{mod}(s_m) \tag{38-52}$$

If unequal modulation is used for the user, the coded bits are output by an LDPC encoder, the number of spatial streams ranges $2 \le N_{SS} \le 4$, and the modulations of the spatial streams range from QPSK to 4096-QAM with $2 \le N_{\mathrm{BPSCS}}(i_{SS}) \le 12$.

38.3.16.5 Segment parser

The bit stream of each spatial stream is further parsed to the frequency segments if the RU or MRU size of the user is larger than 996 tones. The segment parser operation described in 36.3.13.5 (Segment parser) is specified for one of the spatial streams in EQM transmission, and the parsing is carried out in the same way per stream. For multi-stream UEQM transmissions, the segment parser operation described in 36.3.13.5 (Segment parser) shall be applied to each spatial stream using the parameters corresponding to the modulation order of the stream.

The segment parser is bypassed for a UHR ELR PPDU.

Copyright © 2025 IEEE. All rights reserved.
This is an unapproved IEEE Standards Draft, subject to change.

38.3.16.6 BCC interleavers

The BCC interleavers described in 36.3.13.6 (BCC interleavers) are applied to UHR MU PPDU and UHR TB PPDU.
The interleaver parameters for the UHR ELR PPDU Data field, N_{COL} and N_{ROW}, shall be the same as those defined in Table 27-36 (BCC interleave parameters) for the 52-tone RU size and DCM not used.

NOTE—Since only one spatial stream is used in UHR ELR transmission, N_{ROT} is not applicable.

38.3.16.7 LDPC tone mapper

The LDPC tone mapper described in 36.3.13.8 (LDPC tone mapper) is applied to UHR MU PPDU and UHR TB PPDU.

The LDPC tone mapping for the UHR ELR PPDU Data field shall be applied to a 52-tone RRU(#9134), using the same LDPC tone mapping distance parameter D_{TM} as defined in Table 36-52 (LDPC tone mapping distance for each RU or MRU size within an 80 MHz frequency subblock) for the 52-tone RU size.

When IM is enabled, the value of D_{TM} is defined in Table Table 38-45 (LDPC tone mapping distance for each RU within an 80 MHz frequency subblock, when IM is enabled).

Table 38-45—LDPC tone mapping distance for each RU within an 80 MHz frequency sub-block, when IM is enabled

Parameter	RU size (tones)		
	242	484	996
D_{TM}	9	9	10

When IM is enabled, the LDPC tone mapping operation is identical to that defined by Equation (36-72), with the following exception:

$$t(k,l) = \left(D_{TM_l}\left(k \bmod \frac{N_{TM}}{D_{TM_l}}\right) + \gamma + \left\lfloor \frac{k \cdot D_{TM_l}}{N_{TM}} \right\rfloor\right) \bmod N_{TM}$$

$$\gamma = \left\lfloor \frac{D_{TM_l}}{2} \right\rfloor = \begin{cases} 4, & \text{for a 242-tone RU} \\ 4, & \text{for a 484-tone RU} \\ 5, & \text{for a 996-, 2x996- and a 4x996-tone RU} \end{cases}$$

38.3.16.8 Segment deparser

The segment deparser described in 36.3.13.9 (Segment deparser) is applied to UHR MU PPDU and UHR TB PPDU.

The segment deparser is bypassed for a UHR ELR PPDU.

Copyright © 2025 IEEE. All rights reserved.
This is an unapproved IEEE Standards Draft, subject to change.

38.3.16.9 Frequency domain duplication

The ELR-SIG and payload portion of the UHR ELR PPDU are transmitted over 52-tone RRU(#9134) with four times duplication in frequency domain across four RRU52s (RRU52 4x DUP) in 20 MHz. The frequency domain duplication is described as follows:

— Encoding and BPSK or QPSK modulation are done for each of the 52-tone RRUs in the 20 MHz bandwidth. The same data is modulated on each of the four RRUs (i.e. 52-tone RU1 to RU4 in Table 27-8).

— The phase rotation of -1 shall be applied on data subcarriers of the lower half of the 52-tone RRU 3 and the upper half of the 52-tone RRU 4 in 20 MHz PPDU to reduce PAPR, as illustrated in Figure 38-24 (RRU52 4x DUP). See Equation (38-53) to Equation (38-55) for further details. This phase rotation of -1 is not applied on pilot subcarriers.

— The above frequency domain duplication over four 52-tone RRUs occurs after LDPC tone mapping operation if LDPC encoding is used or after constellation mapping operation if BCC encoding is used.

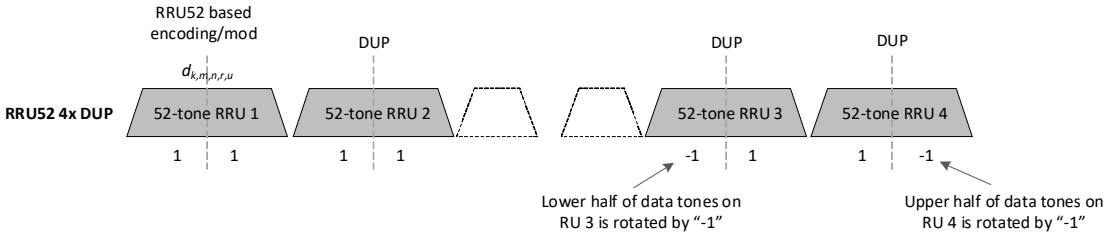

Figure 38-24—RRU52 4x DUP

After frequency domain duplication, the transmitted constellations over four RRU52s are defined by Equation (38-53), Equation (38-54), and Equation (38-55).

$$\tilde{d}_{k,m,n,0,u} = \tilde{d}_{k,m,n,1,u} = d_{k,m,n,0,u}, \quad 0 \le k \le N_{SD} - 1 \tag{38-53}$$

$$\tilde{d}_{k,m,n,2,u} = \begin{cases} -d_{k,m,n,0,u}, & 0 \le k \le \frac{N_{SD}}{2} - 1 \\ d_{k,m,n,0,u}, & \frac{N_{SD}}{2} \le k \le N_{SD} - 1 \end{cases} \tag{38-54}$$

$$\tilde{d}_{k,m,n,3,u} = \begin{cases} d_{k,m,n,0,u}, & 0 \le k \le \frac{N_{SD}}{2} - 1 \\ -d_{k,m,n,0,u}, & \frac{N_{SD}}{2} \le k \le N_{SD} - 1 \end{cases} \tag{38-55}$$

where $m = 1$ since $N_{SS,0} = 1$ for UHR ELR PPDU.

$n = 0, 1, \ldots, N_{SYM} - 1$

$u = 0$ since UHR ELR PPDU supports only one user.

$N_{SD} = 48$ since UHR ELR PPDU uses 52-tone RRUs.

Copyright © 2025 IEEE. All rights reserved.
This is an unapproved IEEE Standards Draft, subject to change.

Here, $\tilde{d}_{k,m,n,0,u}$ maps to data subcarriers in RU1, $\tilde{d}_{k,m,n,1,u}$ maps to data subcarriers in RU2, $\tilde{d}_{k,m,n,2,u}$ maps to data subcarriers in RU3, and $\tilde{d}_{k,m,n,3,u}$ maps to data subcarriers in RU4, where RU1, RU2, RU3, and RU4 correspond to 52-tone RRUs(#9134) for a 20 MHz PPDU (see Table 27-8 (Data and pilot subcarrier indices for RUs in a 20 MHz HE PPDU and in a non-OFDMA 20 MHz HE PPDU)).

38.3.16.10 Pilot subcarriers

For a user transmitting on the *i*-th 26-, 52-, 106-, 242-, and 484-tone RU in a 20 MHz or 40 MHz PPDU bandwidth (see Table 27-8 (Data and pilot subcarrier indices for RUs in a 20 MHz HE PPDU and in a non-OFDMA 20 MHz HE PPDU) and Table 27-9 (Data and pilot subcarrier indices for RUs in a 40 MHz HE PPDU and in a non-OFDMA 40 MHz HE PPDU)), the pilot subcarriers defined in 27.3.12.13 (Pilot subcarriers) shall be used.

For a user transmitting on the *i*-th 26-, 52-, 106-, 242-, 484-, 996-, 2×996-tone RU and 4×996-tone RU in an 80 MHz, a 160 MHz, or a 320 MHz PPDU bandwidth (see Table 36-5 (Data and pilot subcarrier indices for RUs in an 80 MHz EHT PPDU), Table 36-6 (Data and pilot subcarrier indices for RUs in a 160 MHz EHT PPDU), and Table 36-7 (Data and pilot subcarrier indices for RUs in a 320 MHz EHT PPDU)), the pilot subcarriers defined in 36.3.13.11 (Pilot subcarriers) shall be used.

DRU only use 4x UHR-LTF. The number of pilot tones for DRU is the same as the same size RRU. The pilot subcarrier indices for the DRU Data field and UHR-LTF field OFDM symbols are defined in 38.3.16.10 (Pilot subcarriers).

UHR DRU tone plan has a hierachical pilot structure. Pilot locations of a larger DRU is a subset of pilot locations of smaller component DRUs within the same distribution BW (DBW).

For a user transmitting on the i-th 26/52/106-tone DRU in 20 MHz DBW, the pilot subcarriers shall be inserted in subcarriers k∈ *KdRxx_i*, where *KdRxx_i* is given by the i-th pilot index set in the row of given DRU size of f Table 38-46 (Pilot indices for DRU transmission over 20 MHz).

Table 38-46—Pilot indices for DRU transmission over 20 MHz

DRU size	***KdRxx_i***
DRU26, i = 1:9	{–111 15}, {–89 37}, {–100 26}, {–78 48},{–67 59}, {–56 70}, {–34 92}, {–45 81}, {–23 103}
DRU52, i = 1:4	{–111 –89 15 37}, {–100 –78 26 48}, {–56 –34 70 92}, {–45 –23 81 103}
DRU106, i = 1:2	{–111 –78 15 48}, {–56 –23 70 103}

Copyright © 2025 IEEE. All rights reserved.
This is an unapproved IEEE Standards Draft, subject to change.

For a user transmitting on the i-th 26/52/106/242-tone DRU in 40 MHz DBW, the pilot subcarriers shall be inserted in subcarriers k∈ *KdRxx_i*, where *KdRxx_i* is given by the i-th pilot index set in the row of given DRU size of Table 38-47 (Pilot indices for DRU transmission over 40 MHz).

Table 38-47—Pilot indices for DRU transmission over 40 MHz

DRU size	***KdRxx_i***
DRU26, i = 18	{–224 28}, {–125 127}, {–202 50}, {–103 149}, {–81 171}, {–114 138}, {–213 39}, {–92 160}, {–191 61}, {–169 83}, {–70 182}, {–147 105}, {–48 204}, {–180 72}, {–59 193}, {–158 94}, {–37 215}, {–136 116}
DRU52, i = 1:8	{–224 –125 28 127}, {–202 –103 50 149}, {–213 –114 39 138}, {–191 –92 61 160}, {–169 –70 83 182}, {–147 –48 105 204}, {–158 –59 94 193}, {–136 –37 116 215}
DRU106, i = 1:4	{–224 –103 28 149}, {–213 –92 39 160}, {–169 –48 83 204}, {–158 –37 94 215}
DRU242, i = 1:2	{–224 –213 –103 –92 28 39 149 160}, {–169 –158 –48 –37 83 94 204 215}

For a user transmitting on the i-th 52/106/242-tone DRU in 60 MHz DBW, the pilot subcarriers shall be inserted in subcarriers k∈ *KdRxx_i*, where *KdRxx_i* is given by the i-th pilot index set in the row of given DRU size of Table 38-48 (Pilot indices for DRU transmission over 60 MHz).

Table 38-48—Pilot indices for DRU transmission over 60 MHz

DRU size	***KdRxx_i***
DRU52, i = 1:12	{–373 –219 –65 173}, {–450 –296 –142 96}, {–412 –258 –104 134}, {–335 –181 –27 211}, {–386 –232 –78 160}, {–463 –309 –155 83}, {–425 –271 –117 121}, {–348 –194 –40 198}, {–399 –245 –91 147}, {–476 –322 –168 70}, {–438 –284 –130 108}, {–361 –207 –53 185}
DRU106, i = 1:6	{–450 –296 –142 96}, {–335 –181 –27 211}, {–463 –309 –155 83}, {–348 –194 –40 198}, {–476 –322 –168 70}, {–361 –207 –53 185}
DRU242, i = 1:3	{–450 –335 –296 –181 –142 –27 96 211}, {–463 –348 –309 –194 –155 –40 83 198}, {–476 –361 –322 –207 –168 –53 70 185}

Copyright © 2025 IEEE. All rights reserved.
This is an unapproved IEEE Standards Draft, subject to change.

For a user transmitting on the i-th 52/106/242/484-tone DRU in 80 MHz DBW, the pilot subcarriers shall be inserted in subcarriers k∈ *KdRxx_i*, where *KdRxx_i* is given by the i-th pilot index set in the row of given DRU size of Table 38-49 (Pilot indices for DRU transmission over 80 MHz).

Table 38-49—Pilot indices for DRU transmission over 80 MHz

DRU size	*KdRxx_i*
DRU52, i = 1:16	{–447 –359 53 141}, {–403 –315 97 185}, {–227 –139 273 361}, {–183 –95 317 405}, {–425 –117 75 383}, {–381 –73 119 427}, {–337 –249 163 251}, {–293 –205 207 295}, {–194 –106 306 394}, {–150 –62 350 438}, {–370 –282 130 218}, {–326 –238 174 262}, {–260 –172 240 328}, {–216 –128 284 372}, {–392 –84 108 416}, {–436 –348 64 152}
DRU106, i = 1:8	{–403 –315 97 185}, {–227 –139 273 361}, {–381 –117 119 383}, {–293 –205 207 295}, {–150 –62 350 438}, {–326 –238 174 262}, {–260 –172 240 328}, {–348 –84 152 416}
DRU242, i = 1:4	{–403 –315 –227 –139 97 185 273 361}, {–381 –293 –205 –117 119 207 295 383}, {–326 –238 –150 –62 174 262 350 438}, {–348 –260 –172 –84 152 240 328 416}
DRU484, i = 1:2	{–403 –381 –315 –293 –227 –205 –139 –117 97 119 185 207 273 295 361 383}, {–348 –326 –260 –238 –172 –150 –84 –62 152 174 240 262 328 350 416 438}

For UHR ELR PPDU, the ELR-SIG and data symbols are transmitted on four 52-tone RRUs(#9134). The pilot mapping and pilot subcarriers are the same as that of four RRU52s in 20 MHz PPDU in DL OFDMA as defined in 27.3.12.13 (Pilot subcarriers).

38.3.16.11 OFDM modulation

Variables used in this subclause are defined in 38.3.13 (Timing-related parameters) and 38.3.14 (Mathematical description of signals) unless specified otherwise.

The time domain waveform for transmit chain i_{TX}, $1 \le i_{TX} \le N_{TX}$ of the Data field of a UHR MU PPDU and UHR TB PPDU (for user *u* in the *r*-th RU, MRU or DRU) are defined in Equation (38-56) and Equation (38-57), respectively.

$$r^{(i_{TX})}_{\text{UHR-Data,MU}}(t) = \tag{38-56}$$

$$\frac{1}{\sqrt{\sum_{r=0}^{N_{RU}-1} \alpha_r^2 |K_r|}} \sum_{n=0}^{N_{SYM}-1} w_{T_{\text{SYM}}}(t - nT_{SYM}) \sum_{r=0}^{N_{RU}-1} \frac{\alpha_r}{\sqrt{N_{SS,r,total}}} \sum_{k \in K_r} \sum_{u=0}^{N_{user,r}-1} \sum_{m=1}^{N_{SS,r,u}} ([Q_{k,u}]_{i_{TX},m}$$

$$(D^u_{k,m,n,r} + p_{n+4+N_{\text{UHR-SIG}}} P^k_n) \exp(j2\pi k \Delta_{F,\text{UHR}}(t - nT_{SYM} - T_{GI,\text{Data}} - T_{CS,\text{UHR}}(M_{r,u} + m))))$$

Copyright © 2025 IEEE. All rights reserved.
This is an unapproved IEEE Standards Draft, subject to change.

$$r^{(i_{TX})}_{\text{UHR-Data,TB},\, r,\, u}(t) = \tag{38-57}$$

$$\frac{1}{\sqrt{|K_r|}} \sum_{n=0}^{N_{SYM}-1} w_{T_{\text{SYM}}}(t - nT_{SYM}) \frac{1}{\sqrt{N_{SS,\, r,\, u}}} \sum_{k \in K_r} \sum_{m=1}^{N_{SS,\, r,\, u}} ([Q_{k,\, u}]_{i_{TX},\, m}$$

$$(D^{u}_{k,\, m,\, n,\, r} + p_{n+4} P^{k}_{n}) \exp(j2\pi k \Delta_{F,\, \text{UHR}}(t - nT_{SYM} - T_{GI,\, \text{Data}} - T_{CS,\, \text{UHR}}(M_{r,\, u} + m))))$$

where

p_n is defined in 17.3.5.10 (OFDM modulation).

P^k_n is defined based on the RU, MRU or DRU size. The value is defined in 38.3.16.10 (Pilot subcarriers) for RU and MRU, and in 38.3.16.10 (Pilot subcarriers) for DRU.

$T_{CS,\, \text{UHR}}(M_{r,\, u} + m)$ represents the cyclic shift for spatial stream $M_{r,\, u} + m$ as defined in 38.3.15.2.2 (Cyclic shift for UHR modulated fields).

$D^u_{k,\, m,\, n,\, r}$ is the transmitted constellation for user u in the r-th RU, MRU or DRU at subcarrier k, spatial stream m, and Data field OFDM symbol n in a UHR MU PPDU or a UHR TB PPDU, and is defined by Equation (38-58).

$$D^{u}_{k,\, m,\, n,\, r} = \begin{cases} 0, & k \in K_{Pilot} \\ d_{Z_r(k),\, m,\, n,\, r,\, u}, & \text{otherwise} \end{cases} \tag{38-58}$$

where

K_{Pilot} is the set of pilot subcarrier indices for the Data field OFDM symbols as defined in 38.3.16.10 (Pilot subcarriers)

$$Z_r(k) = |\{k' : K_{r,\, \min} \le k' \le k\} \cap K_r| - 1 - |\{k' : K_{r,\, \min} \le k' \le k\} \cap K_{Pilot}| \tag{38-59}$$

where

$K_{r,\, \min}$ is the minimum value of the set K_r.

$|\Phi|$ is the cardinality of a set Φ.

NOTE— $Z_r(k)$ translates a subcarrier index $(k \in K_r)$ into the index of data symbols in a transmission over RU or MRU r, $(0 \le Z_r(k) \le N_{SD,\, total} - 1)$. The subcarrier index k for the data subcarrier is first offset by the minimum value of subcarrier index $K_{r,\, \min}$ (for the lower edge subcarrier) in this RU or MRU and number of the unoccupied tones, and then subtracted by the number of pilot subcarriers falling in between the data subcarrier and the edge subcarrier.

The time domain waveform for transmit chain i_{TX}, $1 \le i_{TX} \le N_{TX}$, of the Data field of a UHR ELR PPDU is defined in Equation (38-60).

$$r^{i_{TX}}_{\text{UHR-Data,ELR}}(t) \tag{38-60}$$

$$= \frac{1}{2\sqrt{|K_{\text{RU52}_r}|}} \sum_{n=0}^{N_{\text{SYM}}-1} w_{T_{\text{SYM}}}(t - nT_{\text{SYM}})$$

$$\sum_{r=0}^{3} \sum_{k \in K_{\text{RU52}_r}} ([Q_{k,\, 0}]_{i_{TX},\, 1} (D_{k,\, n,\, r} + p_{n+8} P^{k}_{n}) \exp(j2\pi \Delta_{F,\, \text{UHR}}(t - nT_{\text{SYM}} - T_{GI,\, \text{Data,ELR}})))$$

Copyright © 2025 IEEE. All rights reserved.
This is an unapproved IEEE Standards Draft, subject to change.

where

K_{RU52_r} is the data and pilot subcarrier index sets for the r-th 52-tone RU in a 20 MHz PPDU and is defined in Table 27-8 (Data and pilot subcarrier indices for RUs in a 20 MHz HE PPDU and in a non-OFDMA 20 MHz HE PPDU(11ax)).

$D_{k,n,r}$ is the transmitted constellation at subcarrier k in the r-th 52-tone RU of the n-th OFDM symbol and is defined in 38.3.15.12.3 (Encoding and modulation).

38.3.17 Packet extension

A PE field of duration 0 µs, 4 µs, 8 µs, 12 µs, 16 µs, or 20 µs is present in a UHR PPDU. A PE field of duration 20 µs is only allowed in the following cases:

— a UHR MU PPDU with at least one participating STA being modulated with 4096-QAM,

— a 320 MHz UHR MU PPDU if the size of one of the allocated RU or MRU is greater than 2×996,

— a UHR MU PPDU with the Co-BF or Co-SR transmission,

— a UHR MU PPDU with at least one participating STA being encoded with 2xLDPC code,(#9092, #9187)

— a UHR TB PPDU.

A non-AP UHR STA shall support transmission of a UHR TB PPDU with a PE field of duration up to 20 µs, and reception of a UHR MU PPDU with a PE field of duration up to 20 µs. The PE field provides additional receive processing time at the end of the UHR PPDU. The PE field, if present, shall be transmitted with the same average power as the Data field. Other than that, its content is arbitrary. The spectrum used by the PE field shall be commensurate with the locations and sizes of the occupied RU(s) (including both the RRU and DRU) or MRU(s) in the Data field to minimize power leakage outside of the spectrum used by the Data field.

The duration of the PE field for a UHR MU PPDU is determined by both the pre-FEC padding factor value in the last OFDM symbol of the Data field, and the TXVECTOR parameter NOMINAL_PACKET_PADDING as described in 37.12 (Nominal packet padding values selection rules).

For a UHR MU PPDU, the nominal T_{PE} value ($T_{PE,nominal}$)(#8857) is given by Equation (36-91) in 36.3.14 (Packet extension). The relationship among the pre-FEC padding factor α, the nominal packet padding value and the nominal T_{PE} value is the same as described in 36.3.14 (Packet extension). The duration of the PE field, T_{PE}, may take values of 0 µs, 4 µs, 8 µs, 12 µs, 16 µs, or 20 µs. T_{PE} for a UHR MU PPDU shall not be less than $T_{PE,nominal}$. T_{PE} for a UHR MU PPDU should be equal to $T_{PE,nominal}$ to minimize the packet extension overhead. Illustrations of similar cases(#7222, 8858) are shown in the examples of the PE field duration in an EHT MU PPDU if the maximum value of TXVECTOR parameters NOMINAL_PACKET_PADDING[u] is 8 µs, 16 µs, and 20 µs, respectively (See 36.3.14 (Packet extension)).

For a PPDU with a Co-BF or any mode of Co-SR transmission, the nominal packet padding value shall be equal to 20 µs, (#9094)the pre-FEC padding factor a shall be equal to 4, and the LDPC Extra Symbol Segment value shall be set as 1 if the Data field of the PPDU is LDPC encoded. This leads to a fixed T_{PE} value equal to 20 µs.

In the EHT TB PPDU carrying the sounding feedback for Co-BF in a cross-BSS UHR Co-BF sounding sequence or a UHR Co-BF joint NDP sounding sequence, the nominal packet padding value shall be equal to 20 µs, the pre-FEC padding factor a shall be equal to 4 and the LDPC Extra Symbol Segment value shall

Copyright © 2025 IEEE. All rights reserved.
This is an unapproved IEEE Standards Draft, subject to change.

be set as 1 if the Data field of the PPDU is LDPC encoded. (#9093)The AP shall set the UL Length field and other parameters in the BFRP Trigger frame according to this rule.(#5354, #7074, #8140, #8859, #9095)

The duration of the PE field for a UHR ELR PPDU is 8 µs.

Regarding the PE field for TB PPDUs, the descriptions related to EHT TB PPDUs also apply to UHR TB PPDUs, including the calculation of T_{PE} and N_{SYM} of UHR TB PPDUs, and the PE Disambiguity(#8860) subfield in the Common Info field of the Trigger frame (See 36.3.14 (Packet extension)).

Regarding the PE field of the received UHR MU PPDU at the receiver, the descriptions related to EHT MU PPDUs also apply to UHR MU PPDUs, including the calculation of T_{PE} and N_{SYM} of UHR MU PPDUs, and the PE Disambiguity field of the UHR-SIG field for a UHR MU PPDU (See 36.3.14 (Packet extension)).

38.3.18 Non-HT duplicate transmission

If the TXVECTOR parameter FORMAT is NON_HT and the TXVECTOR parameter NON_HT_MODULATION is NON_HT_DUP_OFDM, the transmitted PPDU is a non-HT duplicate PPDU. Non-HT duplicate transmission is used to transmit to non-HT STAs, HT STAs, VHT STAs, HE STAs, EHT STAs and UHR STAs that may be present in a part of a 40 MHz, 80 MHz, 160 MHz, or 320 MHz channel (see Table 38-3 (Interpretation of FORMAT, NON_HT_MODULATION, and CH_BANDWIDTH parameters)). A non-HT duplicate PPDU transmitted by a UHR STA is the same as described in 36.3.15 (Non-HT duplicate transmission).(#11428)

38.3.19 Transmit requirements for PPDUs sent in response to a triggering frame

38.3.19.1 Introduction

An AP may solicit simultaneous UHR TB PPDU transmissions, or simultaneous non-HT or non-HT duplicate PPDU transmissions from multiple non-AP STAs using a triggering frame. Since there are multiple transmitters (non-AP STAs) in the above simultaneous transmissions, the pre-corrections of transmission time, frequency, sampling symbol clock, and power (in the case of a UHR TB PPDU) by the non-AP STAs are necessary to mitigate synchronization and interference issues at the AP. Frequency and sampling clock pre-corrections are needed to prevent inter-carrier interference. Power pre-correction is necessary to control interference between UHR TB PPDU transmissions from the non-AP STAs. An AP may solicit simultaneous UHR TB PPDU transmissions from both Class A and Class B devices (see Table 38-50 (Transmit power and RSSI measurement accuracy))(#8141, Ed). A non-AP STA that supports UHR TB PPDU transmission shall support power pre-correction as described in 38.3.19.2 (Power pre-correction) and shall meet the pre-correction accuracy requirements described in 38.3.19.3 (Pre-correction accuracy requirements).

A coordinating AP may solicit simultaneous(#5808, #6828, #8861, #9525) DL non-OFDMA Co-BF transmissions from the coordinating and coordinated APs using a Co-BF triggering frame. Since there are multiple transmitters (coordinating and coordinated APs) in the DL non-OFDMA Co-BF transmissions, the pre-corrections of transmission time, frequency and sampling symbol clock by the coordinated AP are necessary to mitigate synchronization and interference issues at the non-AP STAs. Frequency and sampling clock pre-corrections are needed to mitigate(#8142) inter-carrier interference.

A coordinating AP may solicit simultaneous Co-SR transmissions from the coordinating and coordinated APs using a triggering frame.

All the participating APs that transmit DL MU PPDUs using Co-SR or Co-BF(#8863) shall start and end the transmission simultaneously.

Copyright © 2025 IEEE. All rights reserved.
This is an unapproved IEEE Standards Draft, subject to change.

38.3.19.2 Power pre-correction

A STA transmits a UHR TB PPDU at the STA's maximum transmit power for the assigned UHR-MCS if the UL Target Receive Power subfield of the User Info field in the Trigger frame that solicits the UHR TB PPDU or the UL Target Receive Power subfield of the TRS Control field of the frame that solicits a response in a UHR TB PPDU indicates that the maximum transmit power is needed.

Otherwise, the STA calculates the transmit power Tx_{pwr}^{STA}, in units of dBm, of the UHR TB PPDU for the assigned UHR-MCS using Equation (38-61).

$$Tx_{pwr}^{STA} = PL_{DL} + TargetRx_{pwr} \tag{38-61}$$

where

PL_{DL} is the DL pathloss.

$TargetRx_{pwr}$ is the expected receive signal power in units of dBm indicated in the UL Target Receive Power subfield in the User Info field in the Trigger frame or the UL Target Receive Power subfield in the TRS Control field.

The STA computes PL_{DL} using Equation (38-62).

$$PL_{DL} = Tx_{pwr}^{AP} - Rx_{pwr} \tag{38-62}$$

where

Tx_{pwr}^{AP} is the AP's transmit power, normalized to 20 MHz and expressed in dBm/20 MHz, as indicated by the AP Tx Power subfield of the Common Info field in the Trigger frame, the encoding of which is specified in 9.3.1.22 (Trigger frame format), or the AP Tx Power subfield of the TRS Control field, the encoding of which is specified in 9.2.4.7.1 (TRS Control).

Rx_{pwr} is the receive signal power, normalized to 20 MHz and expressed in dBm/20 MHz, at the antenna connector of the STA of the triggering PPDU. Rx_{pwr} is an average of the receive signal power over the antennas on which the average PL_{DL} is being computed. If the triggering PPDU is a HT-mixed, VHT, HE, EHT or UHR PPDU, then the receive signal power is measured from the fields prior to the HT-STF, VHT-STF, HE-STF, EHT-STF or UHR-STF, respectively.

NOTE 1—Tx_{pwr}^{AP} and Rx_{pwr} are normalized to 20 MHz and expressed in dBm/20 MHz, where the normalization only includes nonpunctured channels. Tx_{pwr}^{STA} and $TargetRx_{pwr}$ are expressed in dBm without normalization.

A STA that applies beamforming in the UL should take the beamforming gain into account when calculating the transmit power needed to meet the UL target receive power.

NOTE 2—An AP could account for its beamforming gain in Tx_{pwr}^{AP} or $TargetRx_{pwr}$ if the triggering PPDU used beamforming.

The transmit power of the UHR TB PPDU is further subject to a STA's minimum and maximum transmit power limit due to hardware capability, regulatory requirements and local maximum transmit power levels (see 11.7.5 (Specification of regulatory and local maximum transmit power levels)) as well as non-IEEE 802.11 in-device coexistence requirements.

A STA includes its UL power headroom in the UHR TB PPDU following the rules defined in 26.5.2.4 (A-MPDU contents in an HE TB PPDU), where the rules related to HE TB PPDUs also apply to UHR TB PPDUs. See 37.4.2.3 (Non-AP STA behavior for UL MU operation) for details.

Copyright © 2025 IEEE. All rights reserved.
This is an unapproved IEEE Standards Draft, subject to change.

38.3.19.3 Pre-correction accuracy requirements

38.3.19.3.1 Pre-correction accuracy requirements for a(#8864) STA in response to a triggering PPDU

A STA that transmits a UHR TB PPDU shall support per chain $\max(P-32, -10)$ dBm as the minimum transmit power, where P is the maximum power, in dBm, that the STA can transmit at the antenna connector of that chain using UHR-MCS 0 while meeting the transmit EVM and spectral mask requirements. A STA transmitting at and above the minimum power, but below $P_{\text{max, MCS7}}$, shall support the EVM requirements for UHR-MCS 7 even if the UHR-MCS used for the transmission is lower tha UHR-MCS 7 or is equal to UHR-MCS 17, 19 or 20, where $P_{\text{max, MCS7}}$ is the maximum transmit power supported by the STA for UHR-MCS 7 in a UHR TB PPDU.

A STA that transmits a UHR TB PPDU shall support the absolute and relative transmit power requirements and the RSSI measurement accuracy requirements defined in Table 38-50 (Transmit power and RSSI measurement accuracy).

Table 38-50—Transmit power and RSSI measurement accuracy

Parameter	Minimum requirement		Comments
	Class A	Class B	
Absolute transmit power accuracy	±3 dB	±9 dB	Accuracy of achieving a specified transmit power.
RSSI measurement accuracy	±3 dB	±5 dB	The difference between RSSI and the received power. Requirements are valid from minimum receive to maximum receive input power.
Relative transmit power accuracy	N/A	±3 dB	Accuracy of achieving a change in transmit power for consecutive UHR TB PPDU. The relative transmit power accuracy is applicable only to Class B device.

The absolute transmit power accuracy is applicable for the entire range of transmit power that the STA is intending to use for the current band of operation. The RSSI accuracy requirements shall be applied to receive signal power level range from –82 dBm to –20 dBm in the 2.4 GHz band and from –82 dBm to –30 dBm in the 5 GHz and 6 GHz bands. The requirements are for nominal (room) temperature conditions. The RSSI shall be measured during the reception of the non-UHR portion of the UHR PPDU preamble.

A STA compensates for carrier frequency offset (CFO) error and symbol clock error with respect to the corresponding triggering PPDU when transmitting the following types of PPDUs:

— UHR TB PPDU
— Non-HT or non-HT duplicate PPDU with the TXVECTOR parameter TRIGGER_RESPONDING set to true

NOTE 3—The MU-RTS Trigger frame solicits transmission of a non-HT or non-HT duplicate PPDU and not a UHR TB PPDU. The non-HT or non-HT duplicate PPDU transmitted as a response to an MU-RTS Trigger frame carries a CTS frame.

After compensation, the absolute value of residual CFO error with respect to the corresponding triggering PPDU shall not exceed the following levels when measured at the 10% point of the complementary

Copyright © 2025 IEEE. All rights reserved.
This is an unapproved IEEE Standards Draft, subject to change.

cumulative distribution function (CCDF) of CFO errors in AWGN at a received power of –60 dBm in the primary 20 MHz channel:

— 350 Hz for the data subcarriers of a UHR TB PPDU

— 2 kHz for a non-HT PPDU or non-HT duplicate PPDU

The residual CFO error measurement on a UHR TB PPDU shall be made after the U-SIG field. The residual CFO error measurement on the non-HT or non-HT duplicate PPDU shall be made after the L-STF field. The symbol clock error shall be compensated by the same ppm amount as the CFO error.

A STA that transmits a UHR TB PPDU, non-HT PPDU, or non-HT duplicate PPDU in response to a triggering PPDU shall ensure that the transmission start time of the UHR TB PPDU, non-HT PPDU, or non-HT duplicate PPDU is within ±0.4 µs + 16 µs from the end, at the STA's transmit antenna connector, of the last OFDM symbol of the triggering PPDU (if it contains no PE field) or of the PE field of the triggering PPDU (if the PE field is present).

NOTE 4—This end instant is before any signal extension, so this is equivalent to UHR TB PPDU transmission within 0.4 µs of SIFS after the end of the triggering PPDU including signal extension.

38.3.19.3.2 Pre-correction accuracy requirements at a coordinated AP in response to a Co-BF triggering PPDU

A coordinated AP compensates for carrier frequency offset (CFO) error and symbol clock error with respect to a Co-BF trigger frame when transmitting a DL non-OFDMA Co-BF PPDU.

After compensation, the absolute value of residual CFO error with respect to the corresponding Co-BF triggering PPDU shall not exceed 350 Hz for the data subcarriers of a DL non-OFDMA Co-BF PPDU when measured at the 10% point of the complementary cumulative distribution function (CCDF) of CFO errors in AWGN at a received power of -60 dBm in the primary 20 MHz channel:

The residual CFO error measurement on a DL non-OFDMA Co-BF PPDU shall be made after the U-SIG field.

A coordinated AP that transmits a DL non-OFDMA Co-BF PPDU in response to a Co-BF triggering PPDU shall ensure that the transmission start time of the DL non-OFDMA Co-BF PPDU is within ±0.4 µs + 16 µs from the end, at the coordinated AP's transmit antenna connector, of the PE field of the Co-BF triggering PPDU.

NOTE 5-This end instant is before any signal extension, so this is equivalent to DL non-OFDMA Co-BF transmission within 0.4 µs of SIFS after the end of the Co-BF triggering PPDU including signal extension.

38.3.20 Transmit requirements for a UHR ELR PPDU

38.3.20.1 Introduction

A non-AP STA and an AP STA may transmit a UHR ELR PPDU. A non-AP STA that supports UHR ELR PPDU transmission shall meet the pre-correction accuracy requirement described in 38.3.20.2 (Pre-correction accuracy requirements). There is no pre-correction requirement for an AP STA.

Copyright © 2025 IEEE. All rights reserved.
This is an unapproved IEEE Standards Draft, subject to change.

38.3.20.2 Pre-correction accuracy requirements

A non-AP STA compensates for carrier frequency offset (CFO) error and symbol clock error with respect to PPDU(s) carrying frame(s) by a target AP STA that is addressed to the STA or broadcast frame when transmitting a UHR ELR PPDU.

For the UL UHR ELR PPDU carrying immediate response frame in response to a preceding soliciting frame, after compensation, the absolute value of residual CFO error with respect to the preceding PPDU carrying soliciting frame shall not exceed 15 kHz at the 10% point of the complementary cumulative distribution function (CCDF) of CFO error in AWGN at a received power of -82 dBm in the primary 20 MHz channel.

NOTE—For the UL UHR ELR PPDU not carrying immediate response frame, i.e. TXOP-initiating ELR transmission, the non-AP STA also tries to reduce residual CFO error to meet the same target. In cases that the target is not met, it might impact performance.

The residual CFO error measurement on a UL UHR ELR PPDU shall be made after the L-STF field. The symbol clock error shall be compensated by the same ppm amount as the CFO error.

38.3.21 Coordinated beamforming

38.3.21.1 Introduction

Coordinated beamforming (Co-BF) is a technique used by multiple APs, each with multiple transmit chains (acting as a beamformer), to steer signals using knowledge of the channel in order to improve throughput, reliability and to reduce latency. With SU-MIMO beamforming all spatial streams in the transmitted signal are intended for reception at a single STA. With DL MU-MIMO beamforming, disjoint subsets of the spatial streams are transmitted from a single AP and are intended for reception at different non-AP STAs. With Co-BF, disjoint subsets of spatial streams are transmitted from different APs, where each AP's subset of streams may be further divided into the streams intended for reception at one or more non-AP STAs associated with that AP.

Depending on the available channel knowledge and the available number of transmit chains at the APs, the steering matrices used by all the APs are designed to minimize the interference level measured at either all the receive chains of all the OBSS AP's recipients or, if those recipients have more than a single receive chain, over a subspace of the eigen-modes of the channels to the OBSS AP's recipients.

The sounding procedure needed for obtaining the channel information for performing the steering for Co-BF is described in 37.14 (UHR Co-BF sounding operation).

For Co-BF, the receive signal vector in subcarrier k at recipient u, $\boldsymbol{y}_{k,u} = [y_{k,0}, y_{k,1}, \ldots, y_{k,N_{RX_u}-1}]^T$, is shown in Equation (38-63), where $\boldsymbol{x}_k = [\boldsymbol{x}_{k,0}^T, \boldsymbol{x}_{k,1}^T, \ldots, \boldsymbol{x}_{k,N_{user}-1}^T]^T$ denotes the transmit signal vector in subcarrier k for all N_{user} recipients, with $\boldsymbol{x}_{k,u} = [x_{k,0}, x_{k,1}, \ldots, x_{k,N_{ss,u}-1}]^T$ being the transmit signal for recipient u.

$$\boldsymbol{y}_{k,u} = \boldsymbol{H}_{k,u} \times [Q_{k,0}, Q_{k,1}, \ldots, Q_{k,N_{user}-1}] \times \boldsymbol{x}_k + \boldsymbol{n} \quad (38\text{-}63)$$

Copyright © 2025 IEEE. All rights reserved.
This is an unapproved IEEE Standards Draft, subject to change.

where $\boldsymbol{H}_{k,u}$ is the compound channel matrix from the beamformers to recipient u in subcarrier k with dimensions $N_{RX_u} \times N_{TX}$, where N_{TX} is the total number of transmit chains across all the participant beamformers.

N_{RX_u} is the number of receive chains at recipient u.

$Q_{k,u}$ is a steering matrix for recipient u in subcarrier k with dimensions $N_{TX} \times N_{ss,u}$ and it has zero entries for the rows corresponding to transmit chains of APs that the recipient u is not associated with.

N_{user} is the number of Co-BF PPDU recipients (see Table 21-6 (Frequently used parameters).

$\boldsymbol{n}$ is a vector of additive noise and unmitigated interference.

The Co-BF steering matrix $Q_k = [Q_{k,0}, Q_{k,1}, \ldots, Q_{k,N_{user}-1}]$ is composed of sections (disjoint sets of rows) which are calculated by different beamformers using the beamforming feedback matrices $V_{k,u}$ for subcarrier k from recipient u, and SNR information $SNR_{k,u}$ for subcarrier k from recipient u, where

$u = 0, 1, \ldots, N_{user} - 1$.

NOTE—All the APs participating in a Co-BF transmission need to have the channel state information to all the recipients to make this calculation possible. The process for obtaining this information is described in 37.14 (UHR Co-BF sounding operation).

38.3.21.2 Beamforming Feedback Matrix *V* during UHR sounding operation

Upon reception of an EHT sounding NDP as part of a UHR TB sounding sequence, the beamformee shall follow the procedure as described in 27.3.16.2 (Beamforming feedback matrix V), to calculate the compressed beamforming feedback matrix in the form of angles which are sent to the beamformers in the CSI feedback. When sounding is performed for the purpose of a Co-BF transmission, the feedback shall be of type MU. The beamformee shall generate the beamforming feedback matrices with the number of rows (Nr) equal to the N_{STS} of the sounding NDP. CSD removal guidelines, quantization requirements, tone-grouping options and codebook sizes shall also follow the description in 27.3.16.2 (Beamforming feedback matrix V).

After receiving the angle information, the beamformers reconstruct $V_{k,u}$ using Equation (19-79). For Co-BF, the participating beamformers may calculate the corresponding portion of the overall steering matrix $Q_k = [Q_{k,0}, Q_{k,1}, \ldots, Q_{k,N_{user}-1}]$ using $V_{k,u}$ and $SNR_{k,u}$ ($0 \le u \le N_{user} - 1$) in order to suppress crosstalk between participating beamformees. The method used by the beamformers to calculate the portions of the steering matrix Q_k is implementation specific.

In UHR sounding, the tone grouping and codebook size to be used in the compressed beamforming report of the beamforming feedback matrix V are defined by the AP transmiting the most recent UHR NDP Announcement frame (even if the sounding NDP is sent by another AP).

Copyright © 2025 IEEE. All rights reserved.
This is an unapproved IEEE Standards Draft, subject to change.

In the EHT TB PPDU carrying the sounding feedback for Co-BF in a cross-BSS UHR Co-BF sounding sequence or a UHR Co-BF joint NDP sounding sequence, Nss shall be limited to 1.(#7349) In addition, the following feedback parameters shall be limited as follows: the max Nc shall be limited to 2, codebook size shall be limited to (9,7) and Ng shall be limited to the value of 4.

38.3.21.3 Supported RU sizes in Co-BF

Co-BF transmissions in UHR are applicable only to non-OFDMA DL transmissions.

38.3.21.4 Number of APs, STAs and spatial streams in a Co-BF PPDU

The number of participating APs in a UHR Co-BF transmission shall be 2. The total number of recipient STAs across the 2 APs in a Co-BF transmission shall be less than or equal to 4. The maximum number of spatial streams per recipient STA in Co-BF is 2.

Co-BF transmissions are defined only for a UHR AP that can transmit 4 or more spatial streams.

The maximum total number of spatial streams in a Co-BF PPDU across all recipients shall be 4.

38.3.22 Coordinated spatial reuse

38.3.22.1 General

Co-SR is a technique where multiple APs transmit simultaneously DL MU PPDUs using the mechanism of transmit power control as defined in 37.15.2.2 (Coordinated spatial reuse (Co-SR)).

In the Co-SR transmission, 4× LTF + 0.8 µs GI shall not be used.(#M523)

38.3.22.2 Supported Co-SR modes and PPDU types

UHR Co-SR supports two modes of operation. Mode 1 supports transmitting of a UHR MU PPDU and an EHT MU PPDU from participating APs. Mode 2 supports transmitting of UHR MU PPDUs from all the participating APs.(#7205) The content of the UHR preamble across all the PPDUs transmitted by the participating APs shall be as described in 38.3.15 (UHR preamble).

38.3.22.2.1 Co-SR mode 1

In Co-SR mode 1, the following combinations of the PPDUs are supported:(#7206, Ed)

— The coordinating AP transmits a UHR MU PPDU and the coordinated AP transmits an EHT MU PPDU.

— The coordinating AP transmits an EHT MU PPDU and the coordinated AP transmits a UHR MU PPDU.

— The coordinating and the coordinated APs each transmits an EHT MU PPDU.

In this mode the L-STF, L-LTF, L-SIG and RL-SIG fields shall have identical content across all participating AP.

38.3.22.2.2 Co-SR mode 2

In Co-SR mode 2, coordinating and coordinated APs transmit a UHR MU PPDU(#7207). In this mode the L-STF, L-LTF, L-SIG, RL-SIG and U-SIG fields shall have identical content across the UHR MU PPDUs transmitted by all participating APs.(#5356)

Copyright © 2025 IEEE. All rights reserved.
This is an unapproved IEEE Standards Draft, subject to change.

38.3.22.2.3 Number of APs, STAs and spatial streams in Co-SR transmission

The number of participating APs in Co-SR transmission shall be 2.

The number of recipient non-AP STA for each participating AP in Co-SR transmission shall be 1.

The maximum number of spatial streams transmitted by each participating AP in Co-SR transmission is 4.

38.3.23 EHT sounding NDP for UHR Co-BF sounding sequence

The EHT sounding NDP is a variant of the EHT MU PPDU as defined in 36.3.18 (EHT sounding NDP). An EHT sounding NDP for UHR Co-BF sounding sequence is indicated by setting the PHY Version Identifier to 0 (EHT), PPDU Type And Compression Mode field to 1, the EHT-SIG MCS field to 0, and the Number Of EHT-SIG Symbols field to 0 in the U-SIG field. The format of an EHT sounding NDP for UHR Co-BF sounding sequence is illustrated in Figure 38-25 (EHT sounding NDP format for UHR Co-BF sounding sequences).

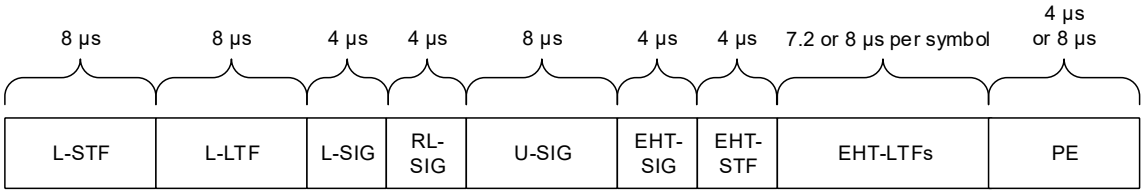

Figure 38-25—EHT sounding NDP format for UHR Co-BF sounding sequences

The BSS Color in the U-SIG of the EHT sounding NDP for UHR Co-BF sounding is set to the BSS Color of the transmitter of the most recent UHR NDP Announcement frame.

In an EHT(#8870) sounding NDP used for Co-BF, the number of spatial streams is set to four or eight spatial streams. Other values are disallowed.

In an EHT(#8870) sounding NDP used for Co-BF, the number of EHT-LTF Symbols is set to four or eight. Other values are disallowed.

GI+LTF size is set to either 2× EHT-LTF with 0.8 µs GI or 2× EHT-LTF with 1.6 µs GI. The other combinations of EHT-LTF type and GI duration are disallowed.

38.3.24 Transmit requirement for UHR Co-BF sounding sequence and Co-BF transmission

A Co-BF AP shall be capable of being a sync-reference or a sync-follower. Co-BF APs' sync-reference and sync-follower roles are determined when a Co-BF MAPC agreement is established using procedures described in 37.15.1.3.2 (MAPC agreement establishment). The sync-reference and sync-follower roles can be changed when a Co-BF MAPC agreement is updated using procedure described in 37.15.1.3.3 (MAPC agreement update).

The sync-follower AP stores a frequency pre-correction value that it uses to align its frequency to the sync-reference AP's frequency during the transmission phase as well as the sounding phase. It is recommended that the sync-follower AP updates the stored frequency pre-correction value based on every NDPA it receives from the sync-reference AP during the sounding phase and every sync frame it receives from the sync-reference AP during the transmission phase.

During the sounding phase, regardless of whether an AP is sync-follower or sync-reference, when an AP receives a cross-BSS NDPA, it shall pre-correct the frequency of the immediately following EHT NDP it transmits, bringing it within 350Hz of the NDPA frequency, for both cross-BSS UHR TB sounding and a

Copyright © 2025 IEEE. All rights reserved.
This is an unapproved IEEE Standards Draft, subject to change.

UHR Co-BF joint NDP sounding. When the sync-follower AP transmits a cross-BSS NDPA, it pre-corrects the NDPA using the stored frequency pre-correction value. It is also recommend-ed that the sync-follower AP applies the frequency pre-correction on the EHT NDP using the stored pre-correction value in an EHT TB sounding within a UHR Co-BF sequential NDP sounding sequence.

During the transmission phase, regardless of whether an AP is the sync-follower or sync-reference, when an AP receives a sync frame, it shall pre-correct the frequency of the immediately following Co-BF transmission it makes, bringing it within 350Hz of the sync frame frequency. When the sync-follower AP happens to be the coordinating AP during the transmission phase, it also performs frequency pre-correction on the Co-BF sync frame as well as on the Co-BF transmission using the stored frequency pre-correction value.

During the transmission phase, when the sync-reference AP happens to be the coordinating AP, it is not required to perform any pre-correction. During the sounding phase, when the sync reference AP transmits the NDPA, it is not required to perform any pre-correction on the NDPA or on the joint-NDP that may immediately follow in case of UHR Co-BF joint NDP sounding.

The UHR Co-BF beamformers that transmits EHT sounding NDPs in a UHR Co-BF joint NDP sounding sequence ensure that the transmission start time of the EHT sounding NDPs is within ±0.4 µs + 16 µs from the end, at the UHR Co-BF beamformers' transmit antenna connectors, of the last OFDM symbol of the PPDU carrying the UHR NDP Announcement frame (if it contains no PE field) or of the PE field of the PPDU carrying the UHR NDP Announcement frame (if the PE field is present).

38.3.25 UHR SU transmission(#Ed, 5358, 5359, 9233, 9398)

The UHR SU transmission is a transmission to a single user using the UHR MU PPDU format with the following settings in the U-SIG field:

— The PPDU Type And Compression Mode subfield has value equal to 1.

— The B2 of U-SIG-2 has value equal to 1.

See also Table 38-24 (Combination of UL/DL field, PPDU Type And Compression Mode field and B2 of U-SIG-2).

38.3.26 Transmit specification(#8934, 11622)

38.3.26.1 Transmit spectral mask

38.3.26.1.1 General

The bandwidth of the spectral mask applied to an UHR PPDU shall be determined by the bandwidth indicated in the Bandwidth subfield of the U-SIG field.

Transmit spectral mask for 20 MHz, 40 MHz, 80 MHz, 160 MHz and 320 MHz mask PPDU of UHR format follows the definition for 20 MHz, 40 MHz, 80 MHz, 160 MHz and 320 MHz mask PPDU of EHT format, respectively, defined in 36.3.20.1.1 (General).

Transmit spectral mask for a UHR ELR PPDU is the same as that for the 20 MHz UHR MU PPDU.(#8143, #8227, #8413, #8877, #9194, #9399, #5360)

38.3.26.1.2 Additional restrictions for puncturing in UHR PPDU

Copyright © 2025 IEEE. All rights reserved.
This is an unapproved IEEE Standards Draft, subject to change.

Additional restrictions for preamble puncturing in UHR MU PPDU and UHR TB PPDU are the same as defined for an EHT MU PPDU and an EHT TB PPDU, respectively, in 36.3.20.1.2 (Additional restrictions for puncturing in EHT PPDU).(#5361)

38.3.26.1.3 Additional restrictions of preamble puncturing for non-HT duplicate PPDU

A UHR STA follows the rules defined in 36.3.20.1.3 (Additional restrictions of preamble puncturing for non-HT duplicate PPDU).(#5362)

38.3.26.2 Spectral flatness

The spectral flatness in UHR PPDU follows the rules defined for an EHT PPDU of the same bandwidth in 36.3.20.2 (Spectral Flatness).(#8144, #8414, #9195)

38.3.26.3 Transmit center frequency and symbol clock frequency tolerance

A UHR STA follows the rule defined in 36.3.20.3 (Transmit center frequency and symbol clock frequency tolerance). A UHR ELR PPDU format is subject to additional requirements as defined in 38.3.20 (Transmit requirements for a UHR ELR PPDU). A UHR TB PPDU format and a UHR MU PPDU in DL non-OFDMA Co-BF transmission are subject to additional requirements as defined in 38.3.19 (Transmit requirements for PPDUs sent in response to a triggering frame).(#8145, #8415, #9196)

38.3.26.4 Modulation accuracy(#8146, #8416)

38.3.26.4.1 Introduction to modulation accuracy tests

Transmit modulation accuracy specifications are described in 38.3.26.4.2 (Transmit center frequency leakage) and 38.3.26.4.3 (Transmitter constellation error). The test method is described in 38.3.26.4.4 (Transmitter modulation accuracy (EVM) test).(#8147, #8417)

38.3.26.4.2 Transmit center frequency leakage

A UHR STA follows the rules defined in 36.3.20.4.2 (Transmit center frequency leakage).(#5365, #8148, #8418)

38.3.26.4.3 Transmitter constellation error

The number of spatial streams under test shall be equal to the number of utilized transmitting STA physical antenna (output) ports and also equal to the number of utilized testing instrumentation input ports. In the test, no beamforming steering matrix shall be used. In the test, only EQM scheme shall be used. In the test, no LDPC coding length of 3888 shall be used.

Table 38-51—Allowed relative constellation error versus constellation size and coding rate for a UHR non-ELR PPDU(#8229)

Modulation	Coding rate	Relative constellation error in a UHR MU PPDU (dB)	Relative constellation error in a UHR TB PPDU(#M533) when transmit power is larger than the maximum power of UHR-MCS 7 (dB)	Relative constellation error in a UHR TB PPDU(#M533) when transmit power is less than or equal to the maximum power of UHR-MCS 7 (dB)
BPSK	1/2	–5	–13	–27

Copyright © 2025 IEEE. All rights reserved.
This is an unapproved IEEE Standards Draft, subject to change.

Table 38-51—Allowed relative constellation error versus constellation size and coding rate for a UHR non-ELR PPDU(#8229) *(continued)*

QPSK	1/2	–10	–13	–27
QPSK	2/3	–12	–13	–27
QPSK	3/4	–13	–13	–27
16-QAM	1/2	–16	–16	–27
16-QAM	2/3	–18	–18	–27
16-QAM	3/4	–19	–19	–27
16-QAM	5/6	-20	-20	-27
64-QAM	2/3	–22	–22	–27
64-QAM	3/4	–25	–25	–27
64-QAM	5/6	–27	–27	–27
256-QAM	2/3	–29	–29	–29
256-QAM	3/4	–30	–30	–30
256-QAM	5/6	–32	–32	–32
1024-QAM	3/4	–35	–35	–35
1024-QAM	5/6	–35	–35	–35
4096-QAM	3/4	–38	–38	–38
4096-QAM	5/6	–38	–38	–38
BPSK-DCM (UHR-MCS 15)	1/2	–5	–13	–27

NOTE 1—The maximum power of UHR-MCS 7 can be measured by setting the UL Target Receive Power subfield as defined in (#Ed)Table 9-63 (UL Target Receive Power subfield in Trigger frame) in the Trigger frame to 127 for the RU for which the EVM test is conducted.

NOTE 2—N/A = not supported by the PPDU format.

Table 38-52—Allowed relative constellation error versus constellation size and coding rate for a UHR ELR PPDU(#8230)

Modulation	Coding rate	Relative constellation error in a UHR ELR PPDU (dB)
BPSK	1/2	–4
QPSK	1/2	–5

Copyright © 2025 IEEE. All rights reserved.
This is an unapproved IEEE Standards Draft, subject to change.

38.3.26.4.4 Transmitter modulation accuracy (EVM) test

(#M533)The transmit modulation accuracy test shall be performed by instrumentation capable of converting the transmitted signals into a stream of complex samples at sampling rate greater than or equal to the bandwidth of the signal being transmitted.

In this case, for UHR non-ELR PPDU, transmit modulation accuracy shall meet the required value in Table 38-51 (Allowed relative constellation error versus constellation size and coding rate for a UHR non-ELR PPDU(#8229)) using only the occupied data subcarriers. For UHR ELR PPDU transmission, transmit modulation accuracy shall meet the required value in 38-52 (Allowed relative constellation error versus constellation size and coding rate for a UHR ELR PPDU(#8230)) using only the occupied data subcarriers.(#11623) For UHR TB PPDU transmission using RRU or DRU or both, two sets of EVM requirements are defined in Table 38-51 (Allowed relative constellation error versus constellation size and coding rate for a UHR non-ELR PPDU(#8229)) for different transmission power levels to assist AP in better managing the interference among multiple STAs responding to a Trigger frame.

LO leakage that can potentially show up at the center frequency of the UHR PPDU tone plan and within ±3 neighboring subcarriers shall be excluded from the computation of the transmitter modulation accuracy test for RRU and DRU.

The transmitter modulation accuracy test procedure for the occupied subcarriers of the PPDU is similar as in steps of the transmit modulation accuracy test procedure defined in 36.3.20.4.4 (Transmitter modulation accuracy (EVM) test) as follows for both RRU and DRU transmissions.

a) Start of PPDU shall be detected.
b) Transition from L-STF to L-LTF shall be detected and fine timing shall be established.
c) Coarse and fine frequency offsets shall be estimated.
d) Symbols in a PPDU shall be derotated according to estimated frequency offset. Sampling offset drift shall be also compensated.
e) For each UHR-LTF symbol, transform the symbol into subcarrier received values, estimate the phase from the pilot subcarriers, and derotate the subcarrier values according to the estimated phase.
f) Estimate the complex channel response coefficient for each of the subcarriers and each of the transmit streams.
g) For each of the data OFDM symbols: transform the symbol into subcarrier received values, estimate the phase from the pilot subcarriers, and compensate the subcarrier values according to the estimated phase, group the results from all of the receiver chains in each subcarrier to a vector, and multiply the vector by a zero-forcing equalization matrix generated from the estimated channel.
h) For each data-carrying subcarrier in each spatial stream of RRU or DRU under test, find the closest constellation point and compute the Euclidean distance from it.
i) Compute the average across PPDUs of the RMS of all errors per PPDU as given by Equation (38-64).

$$Error_{RMS} = \frac{1}{N_f}\sum_{i_f=1}^{N_f}\sqrt{\frac{\sum_{i_s=1}^{N_{SYM}}\sum_{i_{ss}=1}^{N_{SS}}\sum_{i_{sc}=1}^{N_{SD,total}}\left(I_e(i_f,i_s,i_{ss},i_{sc})-I_0(i_f,i_s,i_{ss},i_{sc})\right)^2+\left(Q_e(i_f,i_s,i_{ss},i_{sc})-Q_0(i_f,i_s,i_{ss},i_{sc})\right)^2}{N_{SYM}N_{SS}N_{SD,total}P_0}} \quad (38\text{-}64)$$

where

Copyright © 2025 IEEE. All rights reserved.
This is an unapproved IEEE Standards Draft, subject to change.

$I_0(i_f, i_s, i_{ss}, i_{sc})Q_0(i_f, i_s, i_{ss}, i_{sc})$ denotes the ideal symbol point in the complex plane in data subcarrier i_{sc} of the RRU or DRU under test, spatial stream i_{ss}, and OFDM symbol i_s of PPDU i_f.

$I_e(i_f, i_s, i_{ss}, i_{sc})Q_e(i_f, i_s, i_{ss}, i_{sc})$ denotes the equalized observed symbol point in the complex plane of the data subcarrier i_{sc} of the RRU or DRU under test, spatial stream i_{ss}, and OFDM symbol i_s of PPDU i_f.

P_0 is the average power of constellation.

N_f is the number of tested PPDUs.

N_{SD} is the number of data tones of the occupied RRU or DRU.

N_{SS} is the number of spatial streams of the data.

N_{SYM} is the number of data OFDM symbols.

The test shall be performed over at least 20 PPDUs (N_f as defined in Equation (38-64)). If the occupied RRU or DRU has 26 tones, the PPDUs under test shall be at least 32 data OFDM symbols long. For occupied RRUs or DRUs that have more than 26 tones, the PPDUs under test shall be at least 16 data OFDM symbols long. Random data shall be used for the symbols.

For a UHR TB PPDU with an RRU or MRU smaller than a 4×996-tone RRU, or any size DRU, additional transmit modulation accuracy test for the unoccupied subcarriers of the PPDU shall be performed. For a UHR TB PPDU with an RRU or MRU, the transmit modulation accuracy test procedure for the unoccupied subcarriers of the PPDU is same as in steps of the transmit modulation accuracy test procedure for the unoccupied subcarriers of the EHT TB PPDU defined in 36.3.20.4.4 (Transmitter modulation accuracy (EVM) test). For a UHR TB PPDU with a DRU, the transmit modulation accuracy test procedure for the unoccupied subcarriers of the PPDU is as follows.

a) Start of PPDU shall be detected.
b) Transition from L-STF to L-LTF shall be detected and fine timing shall be established.
c) Coarse and fine frequency offsets shall be estimated.
d) Symbols in a PPDU shall be derotated according to estimated frequency offset. Sampling offset drift shall be also compensated.
e) For each of the data OFDM symbols, transform the symbol into subcarrier received values and estimate the power of each subcarrier.
f) Compute the average unoccupied subcarrier error vector magnitude for each unoccupied DRU or RRU and average across PPDUs of the RMS of all errors per PPDU as given by Equation (38-65).

$$UnusedToneError_{RMS}(k) = \frac{1}{N_f}\sum_{i_f=1}^{N_f}\sqrt{\frac{\sum_{i_s=1}^{N_{SYM}}\sum_{i_{sc}\in\Omega_k}(I_u(i_f, i_s, i_{sc}))^2 + (Q_u(i_f, i_s, i_{sc}))^2}{N_{SYM}\cdot|\Omega_k|\cdot P_S}} \quad (38\text{-}65)$$

where

$I_u(i_f, i_s, i_{sc})Q_u(i_f, i_s, i_{sc})$ denotes unequalized observed symbol point in the complex plane in subcarrier i_{sc} of the unoccupied DRU or RRU and OFDM symbol i_s of PPDU i_f, where the unoccupied DRU or RRU corresponds to

Copyright © 2025 IEEE. All rights reserved.
This is an unapproved IEEE Standards Draft, subject to change.

$$\begin{cases} \text{an unoccupied 26-tone DRU, if the occupied DRU is within 20 MHz or 40 MHz DBW} \\ \text{an unoccupied 52-tone DRU, if the occupied DRU is within 60 MHz or 80 MHz DBW} \\ \text{a 242-tone RRU outside the DBW of the occupied DRU,} \end{cases} \tag{38-66}$$

Ω_k is a set of subcarriers for k-th unoccupied DRU as defined in Equation (38-66) as defined in Table 38-6 (Data and pilot subcarrier indices for distributed RUs (DRU) in a 20 MHz UHR TB PPDU), Table 38-7 (Data and pilot subcarrier indices for distributed RUs (DRU) in a 40 MHz UHR TB PPDU), Table 38-8 (Data and pilot subcarrier indices for distributed RUs (DRU) in a 60 MHz UHR TB PPDU), Table 38-9 (Data and pilot subcarrier indices for distributed RUs (DRU) in an 80 MHz UHR TB PPDU with 80 MHz DBW)(#Ed); or k-th unoccupied 242-tone RRU in Equation (38-66) as defined in Table 36-5 (Data and pilot subcarrier indices for RUs in an 80 MHz EHT PPDU), Table 36-6 (Data and pilot subcarrier indices for RUs in a 160 MHz EHT PPDU), and Table 36-7 (Data and pilot subcarrier indices for RUs in a 320 MHz EHT PPDU).

P_S is the average data subcarrier power of the occupied DRU under test and is given by Equation (38-67).

$$P_S = \frac{1}{N_{SYM} N_{SD}} \sum_{i_s = 1}^{N_{SYM}} \sum_{i_{sc} = 1}^{N_{SD}} (I_u(i_f, i_s, i_{sc}))^2 + (Q_u(i_f, i_s, i_{sc}))^2 \tag{38-67}$$

where

N_f is the number of tested frames.

N_{SYM} is the number of data OFDM symbols.

$N_{SD,\,total}$ is the number of data subcarriers in the occupied DRU.

g) The average unused subcarrier error vector magnitude for each unoccupied 26-tone DRU within 20MHz or 40MHz DBW or each unoccupied 52-tone DRU within 60MHz or 80MHz DBW as calculated in step f) shall meet the mask requirement in Equation (38-68).

$$UnusedToneError(i_{DRU26/52}) = \max(\varepsilon - 1, -38dB) \tag{38-68}$$

where $i_{DRU26/52}$ is the index of other 26-tone or 52-tone DRU than the occupied DRU in the same DBW.

ε is the relative constellation error requirement for an occupied DRU of a UHR TB PPDU as defined in Table 38-51 (Allowed relative constellation error versus constellation size and coding rate for a UHR non-ELR PPDU(#8229)).

The test shall be performed over at least 20 PPDUs (N_f as defined in Equation (38-65)). The PPDUs under test shall be at least 16 data OFDM symbols long. The unequalized observed symbol of potential LO leakage subcarrier locations shall be treated as zero during unoccupied subcarriers transmit modulation accuracy test. Random data shall be used for the symbols.

To measure unused tone error vector magnitude outside its DBW for an occupied DRU, define the DBW of r in units of 242 tone RRU in Equation (38-69).

Copyright © 2025 IEEE. All rights reserved.
This is an unapproved IEEE Standards Draft, subject to change.

$$r = \begin{cases} 1, & \text{if DBW = 20 MHz} \\ 2, & \text{if DBW = 40 MHz} \\ 4, & \text{if DBW = 60 or 80MHz} \end{cases} \tag{38-69}$$

The average unused subcarrier error vector magnitude for each unoccupied 242-tone RRU outside the occupied DBW but within the PPDU as calculated in step f) shall meet the staircase mask requirement in Equation (38-70) and Equation (), where m defines the gap in the units of 242-tone RRU to the occupied DBW from either side with $m = \pm 1$ being the adjacent 242-tone RRUs.

$$UnusedToneError(i_{RRU242,\,start} + m) \le \begin{cases} \max(\varepsilon - \text{DRU spreading gain}, -38\text{ dB}), & \text{if } -r \le m \le -1 \\ \max(\varepsilon - 10 - \text{DRU spreading gain}, -38\text{ dB}), & \text{if } -2r \le m \le -r-1 \\ \max(\varepsilon - 20 - \text{DRU spreading gain}, -38\text{ dB}), & \text{if } -3r \le m \le -2r-1 \\ -38\text{ dB}, & \text{otherwise} \end{cases} \tag{38-70}$$

The valid range for m for Equation (38-70) is as follows:

$-i_{RRU242,\,start} + 1 \le m \le -1$ for an 80 MHz, 160 MHz or 320MHz PPDU.

$$UnusedToneError(i_{RRU242,\,end} + m) \le \begin{cases} \max(\varepsilon - \text{DRU spreading gain}, -38\text{ dB}), & \text{if } 1 \le m \le r \\ \max(\varepsilon - 10 - \text{DRU spreading gain}, -38\text{ dB}), & \text{if } r+1 \le m \le 2r \\ \max(\varepsilon - 20 - \text{DRU spreading gain}, -38\text{ dB}), & \text{if } 2r+1 \le m \le 3r \\ -38\text{ dB}, & \text{otherwise} \end{cases} \tag{38-71}$$

The valid range for m for Equation (38-71) is as follows:

$1 \le m \le N_{RRU242} - i_{RRU242,\text{end}}$ for an 80 MHz, 160 MHz or 320MHz PPDU.

where $i_{RRU242,\,start}$ is equal to i_{RU} if the occupied DRU DBW is 20MHz, and is defined in Table 38-53 (iRRU242, start for DBW other than 20 MHz).

Table 38-53—$i_{RRU242,\,start}$ for DBW other than 20 MHz

i_{RU}	484-tone RU	484+242-tone MRU	996-tone RU
1	1	1	1
2	3	5	5
3	5	9	9
4	7	13	13

Copyright © 2025 IEEE. All rights reserved.
This is an unapproved IEEE Standards Draft, subject to change.

Table 38-53—$i_{RRU242,\ start}$ for DBW other than 20 MHz *(continued)*

i_{RU}	484-tone RU	484+242-tone MRU	996-tone RU
5	9		
6	11		
7	13		
8	15		

Editor's Note: Cannot enable subscript in a reference, so it shows like Table 38-53 (iRRU242, start for DBW other than 20 MHz), suggest not to use subscript in a title.

$i_{RRU242,\ end}$ is equal to $i_{RRU242,\ start} + r - 1$.

i_{RU} is the index of the occupied 242-tone RRU by the DRU DBW.

N_{RRU242} is the maximum number of 242-tone RRUs for the given bandwidth of the UHR TB PPDU.

ε is the relative constellation error requirement for an occupied RU of a UHR TB PPDU as defined in Table 38-51 (Allowed relative constellation error versus constellation size and coding rate for a UHR non-ELR PPDU(#8229)).

The DRU spreading gain in Equation (38-70) and Equation (38-71) is defined in Table 38-54 (DRU Spreading Gain in dB).

Table 38-54—DRU Spreading Gain in dB

DBW	26-tone DRU	52-tone DRU	106-tone DRU	242-tone DRU	484-tone DRU
20 MHz	9	6	3	N/A	N/A
40 MHz	12	9	6	3	N/A
60 MHz	N/A	12	9	6	N/A(#Ed)
80 MHz	N/A	12	9	6	3(#Ed)

Editor's Note: After confirmation with the author of 11-25/1782r0, and according to the passed SP in 11-25/1176r3, need to swipe the last two rows of the last column.

The test shall be performed over at least 20 PPDUs (N_f as defined in Equation (38-65)). The PPDUs under test shall be at least 16 data OFDM symbols long. The unequalized observed symbol of potential LO leakage subcarrier locations shall be treated as zero during unoccupied subcarriers transmit modulation accuracy test. Random data shall be used for the symbols.

Copyright © 2025 IEEE. All rights reserved.
This is an unapproved IEEE Standards Draft, subject to change.

38.3.27 Receiver specification

38.3.27.1 General

For receiver minimum input sensitivity, adjacent channel rejection, nonadjacent channel rejection, receiver maximum input level, and CCA sensitivity requirements described in this subclause, the input levels are measured at the antenna connector and are referenced as the average power per receive antenna. The number of spatial streams under test shall be equal to the number of utilized transmitting STA physical antenna (output) ports and also equal to the number of utilized receiving STA antenna (input) ports. Each output port of the transmitting STA shall be connected through a cable to one input port of the receiving STA.

NOTE—Additional test requirements and/or test methods might be needed to meet regulatory requirements.

The requirements on receiver minimum input sensitivity in 38.3.27.2 (Receiver minimum input sensitivity), adjacent channel rejection in 38.3.27.3 (Adjacent channel rejection) and nonadjacent channel rejection in 38.3.27.4 (Nonadjacent channel rejection) apply to (#8878, #8945, #9197)

— UHR MU PPDUs that meet all the following conditions:
  - 0.8 µs GI is used.
  - If the PPDU bandwidth is 20 MHz and the UHR-MCS is less than 10 or equal to 15, 17, 19, 20 or 23, then BCC is used. Otherwise, LDPC is used.
  - The PPDU is a UHR MU PPDU without puncturing and both of the PPDU Type And Compression Mode field and the Co-BF/Co-SR Indication field in U-SIG field are equal to 1.

— and UHR ELR PPDUs(#Ed) that meet all the following conditions:
  - BCC is used

38.3.27.2 Receiver minimum input sensitivity

The PER shall be less than 10% for a PSDU with the rate-dependent input levels listed in Table 38-55 (Receiver minimum input level sensitivity for a UHR non-ELR PPDU) and Table 38-56 (Receiver minimum input level sensitivity for a UHR ELR PPDU). The PSDU length shall be 512 octets for ELR-MCS0 and ELR-MCS1, 2048 octets for UHR-MCS 15, or 4096 octets for all other modulations.

Table 38-55— Receiver minimum input level sensitivity for a UHR non-ELR PPDU

Modulation	Rate (*R*)	Minimum sensitivity (20 MHz PPDU) (dBm)	Minimum sensitivity (40 MHz PPDU) (dBm)	Minimum sensitivity (80 MHz PPDU) (dBm)	Minimum sensitivity (160 MHz PPDU) (dBm)	Minimum sensitivity (320 MHz PPDU) (dBm)
BPSK	1/2	–82	–79	–76	–73	–70
QPSK	1/2	–79	–76	–73	–70	–67
QPSK (UHR-MCS 17)	2/3	–78	–75	–72	–69	–66
QPSK	3/4	–77	–74	–71	–68	–65
16-QAM	1/2	–74	–71	–68	–65	–62
16-QAM (UHR-MCS 19)	2/3	–71	–68	–65	–62	–59
16-QAM	3/4	–70	–67	–64	–61	–58

Copyright © 2025 IEEE. All rights reserved.
This is an unapproved IEEE Standards Draft, subject to change.

Table 38-55— Receiver minimum input level sensitivity for a UHR non-ELR PPDU *(contin-*

16-QAM (UHR-MCS 20)	5/6	–69	–66	–63	–60	–57
64-QAM	2/3	–66	–63	–60	–57	–54
64-QAM	3/4	–65	–62	–59	–56	–53
64-QAM	5/6	–64	–61	–58	–55	–52
256-QAM (UHR-MCS 23)	2/3	–60	–57	–54	–51	–48
256-QAM	3/4	–59	–56	–53	–50	–47
256-QAM	5/6	–57	–54	–51	–48	–45
1024-QAM	3/4	–54	–51	–48	–45	–42
1024-QAM	5/6	–52	–49	–46	–43	–40
4096-QAM	3/4	–49	–46	–43	–40	–37
4096-QAM	5/6	–46	–43	–40	–37	–34
BPSK-DCM (UHR-MCS 15)	1/2	–82	–79	–76	–73	–70

(#8947)(#9199)

Table 38-56—Receiver minimum input level sensitivity for a UHR ELR PPDU

Modulation	Rate (*R*)	Minimum sensitivity (20 MHz PPDU) (dBm)
BPSK (ELR-MCS0)	1/2	-82
QPSK (ELR-MCS1)	1/2	-82

38.3.27.3 Adjacent channel rejection

Adjacent channel rejection for *W* MHz (where *W* is 20, 40, 80, 160, or 320) shall be measured by setting the desired signal's strength 3 dB above the rate-dependent sensitivity specified in Table 38-55 (Receiver minimum input level sensitivity for a UHR non-ELR PPDU) and Table 38-56 (Receiver minimum input level sensitivity for a UHR ELR PPDU),(#9235, #10309) and raising the power of the interfering signal of *W* MHz bandwidth until 10% PER is caused for a PSDU length of 512 octets for ELR-MCS0 and ELR-MCS1, 2048 octets for UHR-MCS 15, 4096 octets for all other modulations. The difference in power between the signals in the interfering channel and the desired channel is the corresponding adjacent channel rejection. The center frequency of the adjacent channel shall be placed *W* MHz away from the center frequency of the desired signal.

Copyright © 2025 IEEE. All rights reserved.
This is an unapproved IEEE Standards Draft, subject to change.

The interfering signal in the adjacent channel shall be a signal compliant with the UHR PHY, unsynchronized with the signal in the channel under test, and shall have a minimum duty cycle of 50%. The corresponding rejection shall be no less than specified in Table 38-57 (Minimum required adjacent and nonadjacent channel rejection levels for a UHR non-ELR PPDU(#4074)) and Table 38-58 (Minimum required adjacent and nonadjacent channel rejection levels for a UHR ELR PPDU(#9200, 9199)).(#10310)

Table 38-57—Minimum required adjacent and nonadjacent channel rejection levels for a UHR non-ELR PPDU(#4074)

Modulation	Rate (*R*)	Adjacent channel rejection (dB)	Nonadjacent channel rejection (dB)
		20/40/80/160/320 MHz channel	20/40/80/160/320 MHz channel
BPSK	1/2	16	32
QPSK	1/2	13	29
QPSK (UHR-MCS 17)	2/3	12	28
QPSK	3/4	11	27
16-QAM	1/2	8	24
16-QAM (UHR-MCS 19)	2/3	5	21
16-QAM	3/4	4	20
16-QAM (UHR-MCS 20)	5/6	3	19
64-QAM	2/3	0	16
64-QAM	3/4	–1	15
64-QAM	5/6	–2	14
256-QAM (UHR-MCS 23)	2/3	–6	10
256-QAM	3/4	–7	9
256-QAM	5/6	–9	7
1024-QAM	3/4	–12	4
1024-QAM	5/6	–14	2
4096-QAM	3/4	–17	–1
4096-QAM	5/6	–20	–4
BPSK-DCM (UHR-MCS 15)	1/2	16	32

Copyright © 2025 IEEE. All rights reserved.
This is an unapproved IEEE Standards Draft, subject to change.

Table 38-58—Minimum required adjacent and nonadjacent channel rejection levels for a UHR ELR PPDU(#9200, 9199)

Modulation	Rate (*R*)	Adjacent channel rejection (dB)	Nonadjacent channel rejection (dB)
		20 MHz channel	20 MHz channel
BPSK	1/2	16	32
QPSK	1/2	16	32

The measurement of adjacent channel rejection for 160 MHz and 320 MHz operation in regulatory domain is required only if such a frequency band plan is permitted in the regulatory domain.

38.3.27.4 Nonadjacent channel rejection

Nonadjacent channel rejection for *W* MHz channels (where *W* is 20, 40, 80, 160, or 320) shall be measured by setting the desired signal's strength 3 dB above the rate-dependent sensitivity specified in Table 38-55 (Receiver minimum input level sensitivity for a UHR non-ELR PPDU) and Table 38-56 (Receiver minimum input level sensitivity for a UHR ELR PPDU),(#9236, #10311) and raising the power of the interfering signal of *W* MHz bandwidth until a 10% PER occurs for a PSDU length of 512 octets for ELR-MCS0 and ELR-MCS1, 2048 octets for UHR-MCS 15, 4096 octets for all other modulations. The difference in power between the signals in the interfering channel and the desired channel is the corresponding nonadjacent channel rejection. The nonadjacent channel rejection shall be met with any nonadjacent channels located at least 2×*W* MHz away from the center frequency of the desired signal.

The interfering signal in the nonadjacent channel shall be a signal compliant with the UHR PHY, unsynchronized with the signal in the channel under test, and shall have a minimum duty cycle of 50%. The corresponding rejection shall be no less than specified in Table 38-57 (Minimum required adjacent and nonadjacent channel rejection levels for a UHR non-ELR PPDU(#4074)) and Table 38-58 (Minimum required adjacent and nonadjacent channel rejection levels for a UHR ELR PPDU(#9200, 9199))(#9237, #10312).

The measurement of nonadjacent channel rejection for 160 MHz and 320 MHz operation in regulatory domain is required only if such a frequency band plan is permitted in the regulatory domain.

38.3.27.5 Receiver maximum input level

The receiver shall provide a maximum PER of 10% at a PSDU length of 512 octets for ELR PPDU BPSK and QPSK modulation,(#9201) 2048 octets for BPSK modulation with DCM or 4096 octets for all other modulations, for a maximum input level of –30 dBm in the 5 GHz and 6 GHz bands and –20 dBm in the 2.4 GHz band, measured at each physical antenna port for any baseband UHR modulation.

38.3.27.6 CCA sensitivity

38.3.27.6.1 General

The thresholds in this subclause are compared with the signal level at each receiving antenna.

Copyright © 2025 IEEE. All rights reserved.
This is an unapproved IEEE Standards Draft, subject to change.

38.3.27.6.2 CCA sensitivity for operating classes requiring CCA-ED

A UHR STA follows the rules defined in 36.3.21.6.2 (CCA sensitivity for operating classes requiring CCA-ED).

38.3.27.6.3 CCA sensitivity for the primary 20 MHz channel

A UHR STA follows the rules defined in 36.3.21.6.3 (CCA sensitivity for primary 20 MHz channel).

38.3.27.6.4 Per 20 MHz CCA sensitivity

A UHR STA follows the rules defined in 36.3.21.6.4 (Per 20 MHz CCA sensitivity).

38.3.27.6.5 Received channel power indicator (RCPI) measurement

The RCPI is a measure of the received RF power in the selected channel for a received PPDU. This parameter shall be a measurement by the PHY of the received RF power in the channel measured over the UHR-STF or UHR-LTF field of the received PPDU. If the RCPI is measured for a UHR ELR PPDU, then the reported RCPI value is 3 dB less than the measured power over the UHR-STF or UHR-LTF field. The received power shall be the average of the power in all active receive chains.

NOTE—The UHR-STF and UHR-LTF fields in a UHR ELR PPDU have 3 dB higher power than the Data field, hence the reported RCPI value is subtracting 3 dB from the measured power.

RCPI shall equal the received RF power in dBm within an accuracy of ± 5 dB (95% confidence interval) within the specified dynamic range of the receiver.(#8879, #9238)

38.3.28 UHR transmit procedure

There are four paths for the PHY transmit procedure.

The first three paths, for which typical transmit procedures are shown in Figure 38-26 (PHY transmit procedure for a UHR MU PPDU), Figure 38-27 (PHY transmit procedure for a UHR TB PPDU) and Figure Figure 38-28 (PHY transmit procedure for a UHR ELR PPDU), are selected if the FORMAT field of the PHY-TXSTART.request(TXVECTOR) primitive is equal to UHR_MU, UHR_TB or UHR_ELR, respectively.

Copyright © 2025 IEEE. All rights reserved.
This is an unapproved IEEE Standards Draft, subject to change.

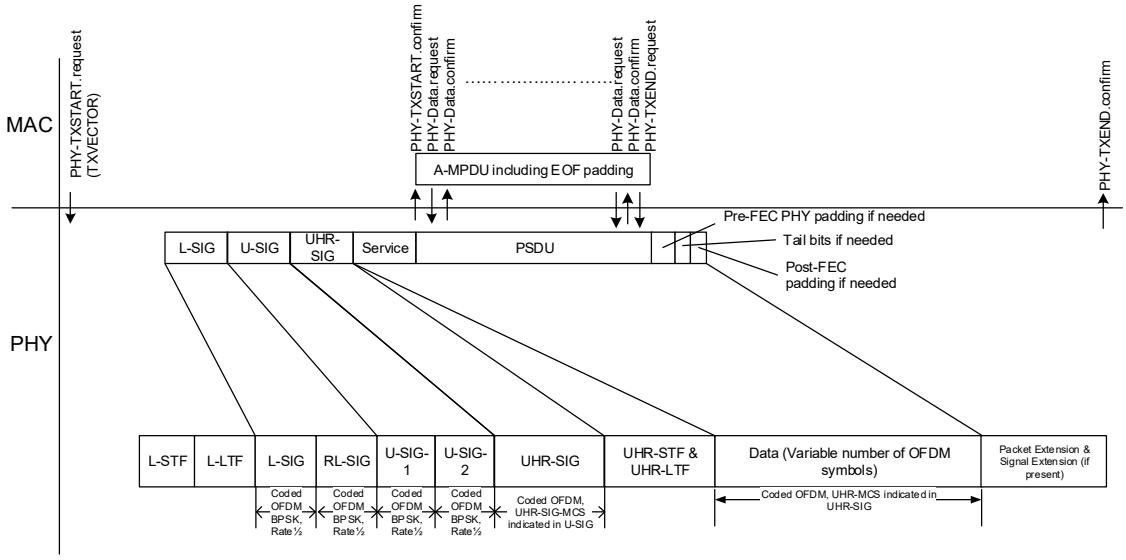

Figure 38-26—PHY transmit procedure for a UHR MU PPDU

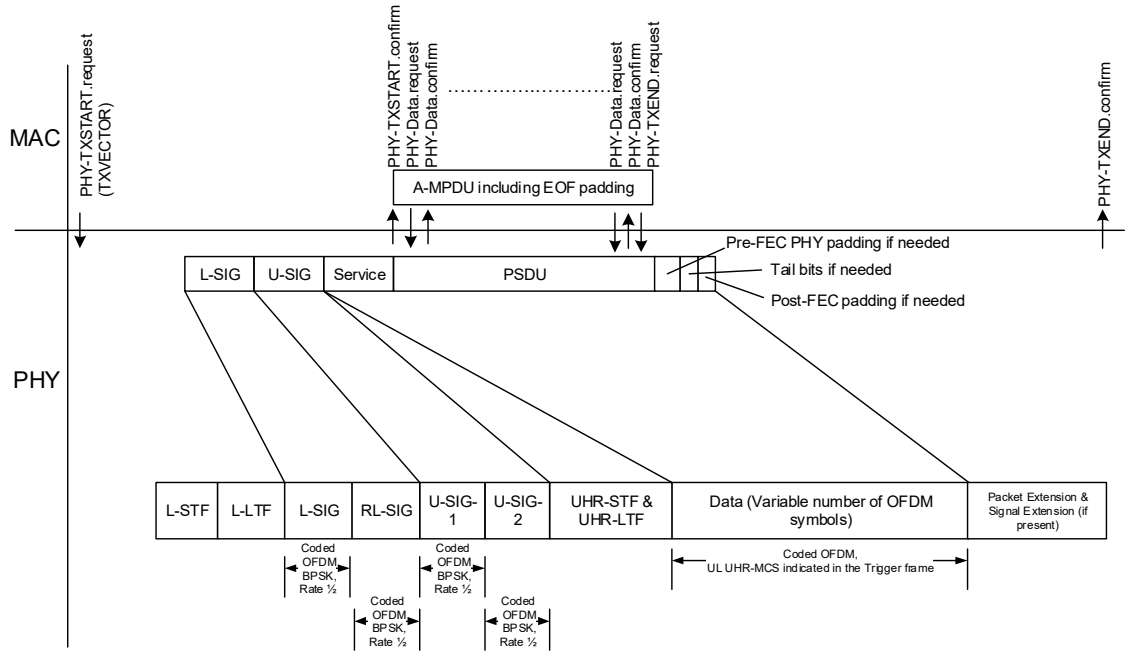

Figure 38-27—PHY transmit procedure for a UHR TB PPDU

Copyright © 2025 IEEE. All rights reserved.
This is an unapproved IEEE Standards Draft, subject to change.

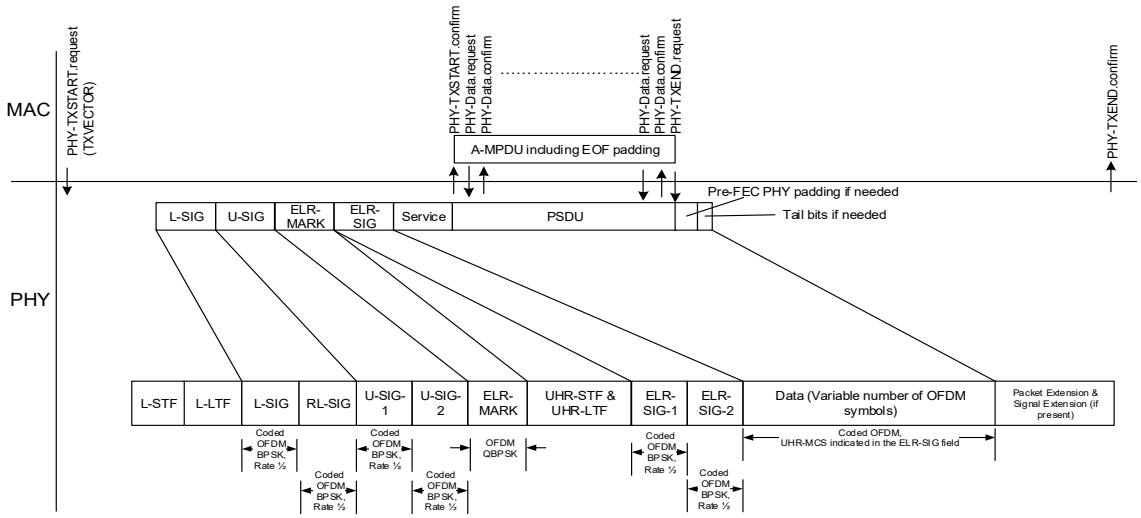

Figure 38-28—PHY transmit procedure for a UHR ELR PPDU

The fourth path is to follow the transmit procedure in Clause 17 (Orthogonal frequency division multiplexing (OFDM) PHY specification) if the FORMAT parameter of the PHY-TXSTART.request(TXVECTOR) primitive is NON_HT and the NON_HT_MODULATION parameter is NON_HT_DUP_OFDM, except that the signal is generated simultaneously on each of the 20 MHz channels identified by the CH_BANDWIDTH parameter as defined in 38.3.15 (UHR preamble) and 38.3.18 (Non-HT duplicate transmission).

NOTE 1—For a(#5896) UHR MU PPDU the A-MPDU is per user in the MAC sublayer and the UHR-STF and UHR-LTF, and Data are per user in the PHY in Figure 38-26 (PHY transmit procedure for a UHR MU PPDU)(#5367).

NOTE 2—The transmission of NON_HT, HT_MF, HT_GF, VHT, HE and EHT(#9098) formats is specified in 38.2.6 (Support for non-HT, HT, VHT, HE, and EHT formats).

In all paths, in order to transmit data, the MAC generates a PHY-TXSTART.request primitive, which causes the PHY entity to respond with a PHY-TXSTART.confirm primitive and enter the transmit state. Further, the PHY is set to operate at the appropriate frequency through STA management via the PLME, as specified in 38.4 (UHR PLME). Other transmit parameters, such as UHR-MCS, coding types, and transmit power, are set via the PHY-SAP using the PHY-TXSTART.request(TXVECTOR) primitive, as described in 38.2.2 (TXVECTOR and RXVECTOR parameters). After transmitting a PPDU that carries a Trigger frame, the MAC sublayer issues a PHY-TRIGGER.request with a TRIGVECTOR parameter that provides the PHY entity with the information needed to demodulate the expected UHR TB PPDU response. The remainder of the subclause applies to the first three paths.

The PHY indicates the state of the primary channel and other channels (if any) via the PHY-CCA.indication primitive (see 38.3.27.6 (CCA sensitivity) and 8.3.5.12 (PHY-CCA.indication)). Transmission of the PPDU shall be initiated by the PHY after receiving the PHY-TXSTART.request(TXVECTOR) primitive. The TXVECTOR parameters for the PHY-TXSTART.request primitive are specified in Table 38-1 (TXVECTOR and RXVECTOR parameters).

After the PHY preamble transmission is started, the PHY entity immediately initiates scrambling and encoding of the SERVICE field and PSDU. The encoding method for the Data field is based on the FEC_CODING, CH_BANDWIDTH, NUM_STS, MCS, RU_ALLOCATION, and STA_ID parameters of the TXVECTOR, as described in 38.3.7 (UHR PPDU formats).

The data shall be exchanged between the MAC and the PHY through a series of PHY-DATA.request(DATA) primitives issued by the MAC, and PHY-DATA.confirm primitives issued by the PHY. PHY padding bits are

Copyright © 2025 IEEE. All rights reserved.
This is an unapproved IEEE Standards Draft, subject to change.

appended to the PSDU to make the number of bits in the coded PSDU an integral multiple of the number of coded bits per OFDM symbol.

Transmission can be prematurely terminated by the MAC through the PHY-TXEND.request primitive. PSDU transmission is terminated by receiving a PHY-TXEND.request primitive. Each PHY-TXEND.request primitive is acknowledged with a PHY-TXEND.confirm primitive from the PHY.

A packet extension and/or a signal extension may be present in the PPDU. The PHY-TXEND.confirm primitive is generated at the latest of the actual ending time of the PPDU, the end of the packet extension if present, and the end of the signal extension if present.

In the PHY, the GI duration indicated in the GI_TYPE parameter of the TXVECTOR is inserted in every data OFDM symbol as a countermeasure against delay spread.

Once the PPDU transmission is completed the PHY entity enters the receive state.

Copyright © 2025 IEEE. All rights reserved.
This is an unapproved IEEE Standards Draft, subject to change.

A typical state machine implementation for the transmission of a(#5897) UHR PPDU is shown in Figure 38-29 (PHY transmit state machine for a UHR PPDU). Request (.request) and confirmation (.confirm) primitives are issued once per state as shown.(#9099)

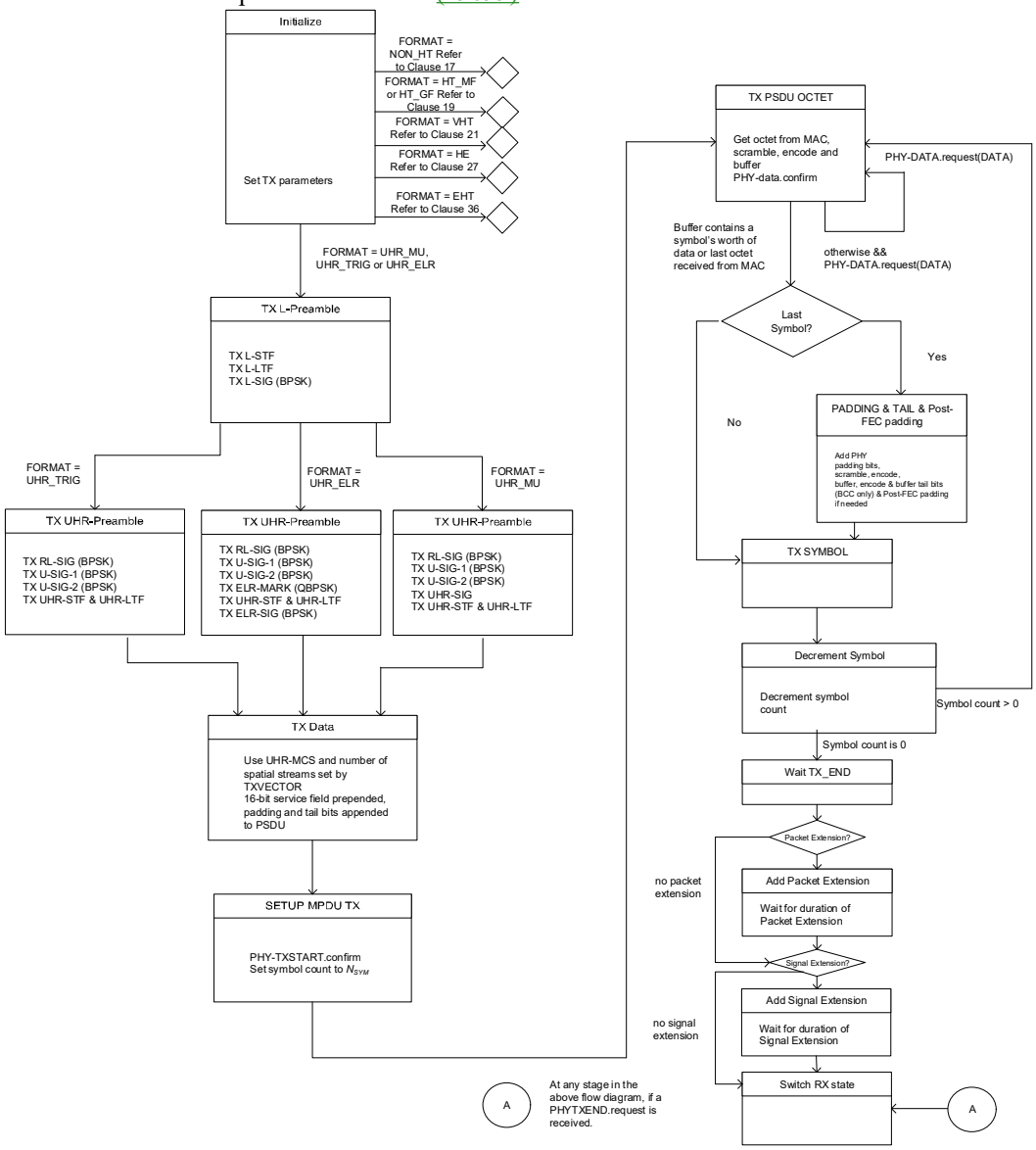

Figure 38-29—PHY transmit state machine for a UHR PPDU

Copyright © 2025 IEEE. All rights reserved.
This is an unapproved IEEE Standards Draft, subject to change.

38.3.29 UHR receive procedure

Typical PHY receive procedures are shown in Figure 38-30 (PHY receive procedure for a UHR MU PPDU), Figure 38-31 (PHY receive procedure for a UHR TB PPDU), and Figure 38-32 (PHY receive procedure for a UHR ELR PPDU).(#9100)

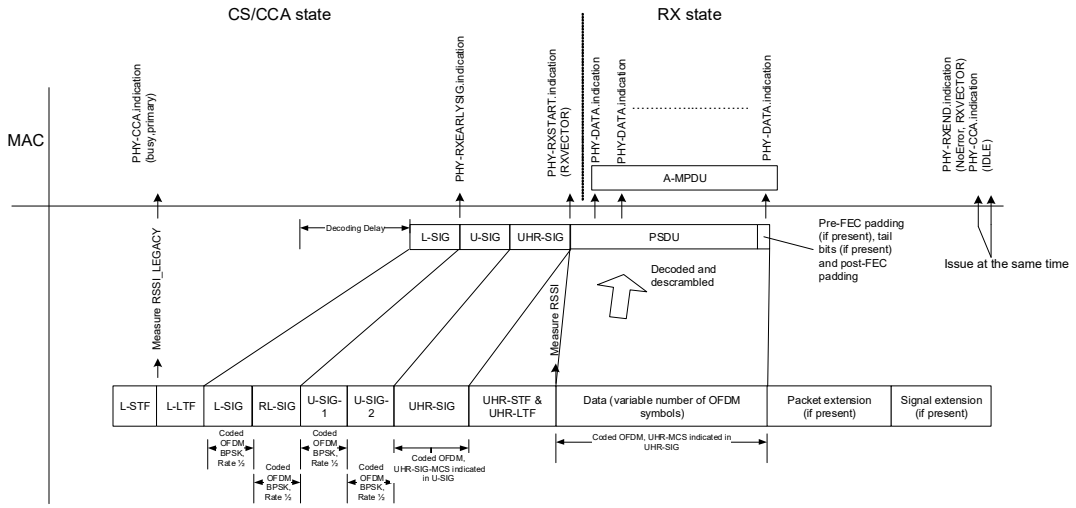

Figure 38-30—PHY receive procedure for a UHR MU PPDU

(#10446)(#9100)

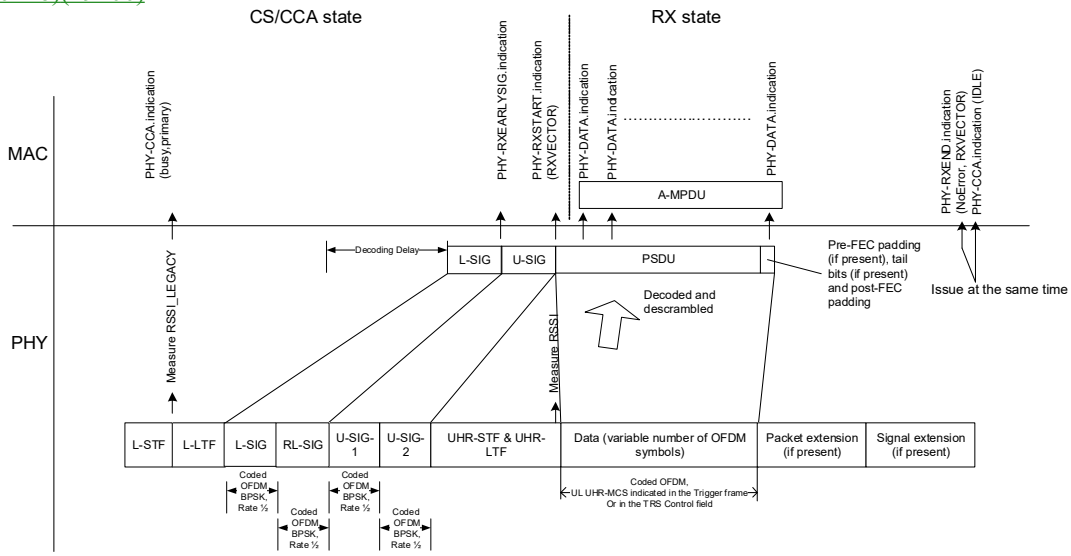

Figure 38-31—PHY receive procedure for a UHR TB PPDU

(#6647, 9101,4075, 9203)(#9100)

Copyright © 2025 IEEE. All rights reserved.
This is an unapproved IEEE Standards Draft, subject to change.

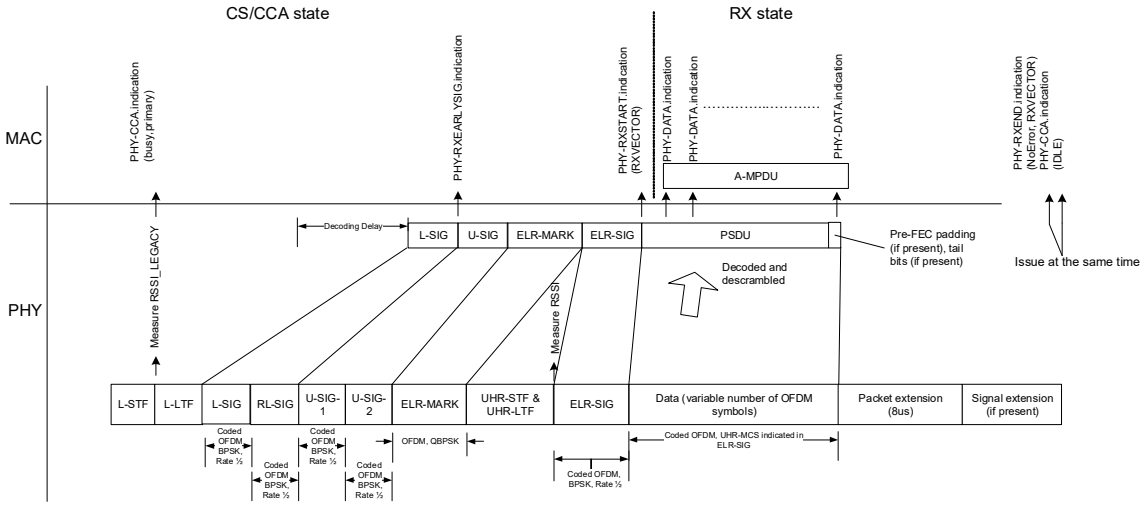

Figure 38-32—PHY receive procedure for a UHR ELR PPDU

A typical state machine implementation of the receive PHY is given in Figure 38-33 (PHY receive state machine for a UHR PPDU).(#4131, 5368, 4977, 11624, 11625, 8562)

Copyright © 2025 IEEE. All rights reserved.
This is an unapproved IEEE Standards Draft, subject to change.

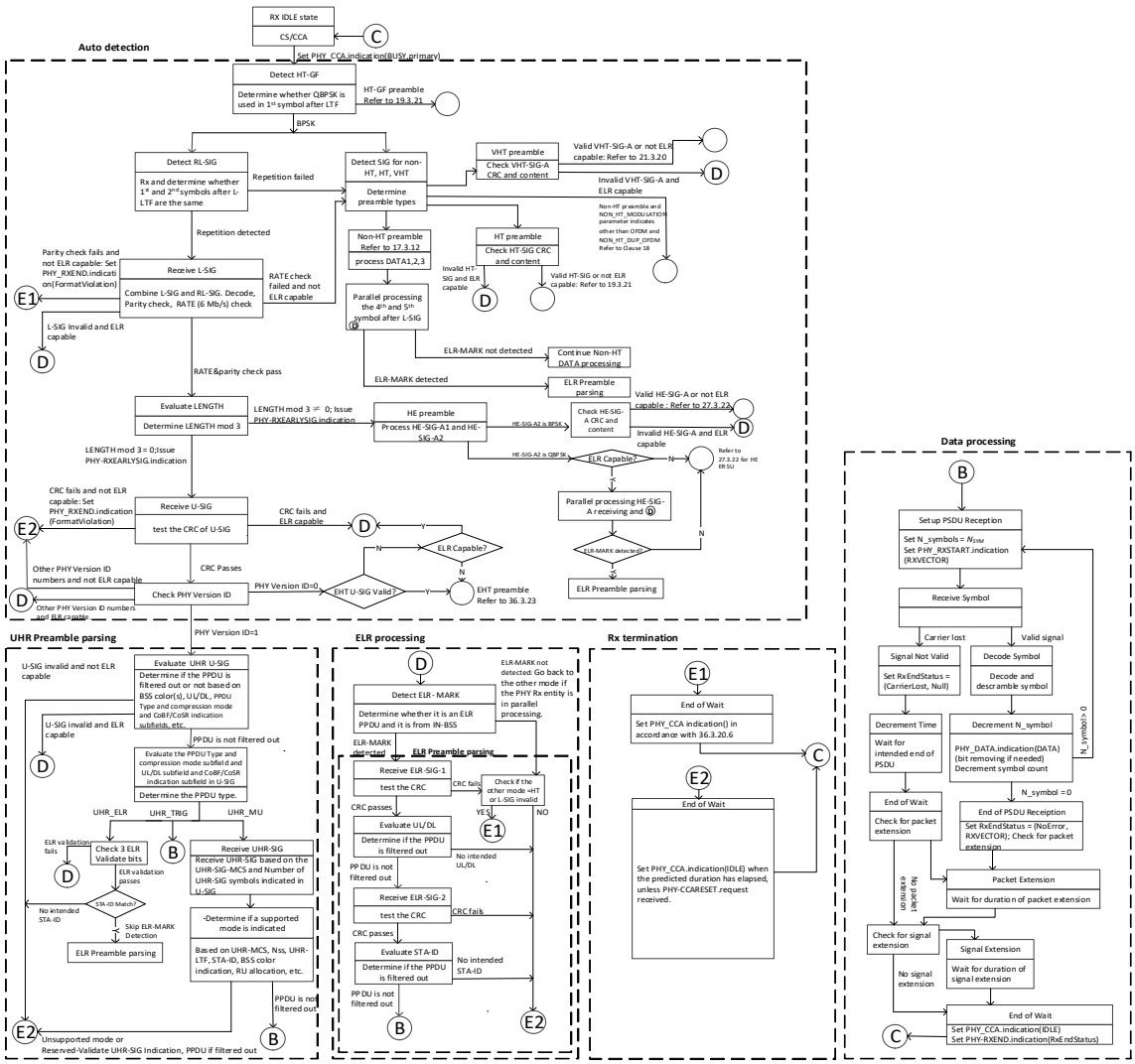

Figure 38-33—PHY receive state machine for a UHR PPDU

If the detected format indicates a non-HT PPDU, refer to the receive procedure and state machine in Clause 15 (DSSS PHY specification)(#9239) for the 2.4 GHz band designated for ISM applications), Clause 16 (High rate direct sequence spread spectrum (HR/DSSS) PHY specification), Clause 17 (Orthogonal frequency division multiplexing (OFDM) PHY specification), and Clause 18 (Extended Rate PHY (ERP) specification) . If the detected format indicates an HT PPDU format, refer to the receive procedure and state machine in Clause 19 (High Throughput (HT) PHY specification). If the detected format indicates a VHT PPDU format, refer to the receive procedure and state machine in Clause 21 (Very High Throughput (VHT) PHY specification). If the detected format indicates an HE PPDU format, refer to the receive procedure and state machine in Clause 27 (High Efficiency (HE) PHY specification). If the detected format indicates an EHT PPDU format, refer to the receive procedure and state machine in Clause 36 (Extremely high throughput (EHT) PHY specification). While a particular format has not been excluded, the corresponding receive procedure may operate such that multiple receive procedures operate in parallel until a single format is indicated and a single receive procedure is operating.

If the UHR STA is ELR capable, the following processing may be used in addition to the aforementioned receive procedure:

Copyright © 2025 IEEE. All rights reserved.
This is an unapproved IEEE Standards Draft, subject to change.

— If the L-SIG, HT-SIG, VHT-SIGA, HE-SIG-A and U-SIG in the corresponding PPDU is identified as invalid, the UHR STA may continue processing the PPDU and searching for the ELR-MARK. Further details are described in this subclause.

NOTE—A valid SIG field refers to a valid CRC or parity check, and the PPDU is not filtered out by checking the contents of this SIG field. An invalid SIG field refers to a failed CRC or parity check, or the PPDU is filtered out by checking the contents of this SIG field.

Through STA management (via the PLME), the PHY is set to the appropriate frequency as specified in 38.4 (UHR PLME). The PHY has also been configured with BSS identification information and STA identification information (i.e., BSS COLOR value and STA-ID) so that it can receive data intended for the STA in the specific BSS. Other receive parameters, such as RSSI and indicated DATARATE, may be accessed via the PHY SAP.

Upon receiving the transmitted PHY preamble in a greater than or equal to 20 MHz BSS, the PHY measures a receive signal strength. This activity is indicated by the PHY to the MAC via a PHY-CCA.indication primitive. A PHY-CCA.indication(BUSY, channel-list) primitive is also issued as an initial indication of reception of a signal as specified in 36.3.21.6 (CCA sensitivity). The channel-list parameter of the PHY-CCA.indication primitive is absent when the operating channel width is 20 MHz. The channel-list parameter is present when the operating channel width is 40 MHz, 80 MHz, 160 MHz, or 320 MHz.

The PHY shall not issue a PHY-RXEARLYSIG.indication nor a PHY-RXSTART.indication primitive in response to a PPDU that does not overlap with(#9259) the primary channel unless the PHY at an AP receives the UHR TB PPDU solicited by the AP. The PHY shall issue both a PHY-RXEARLYSIG.indication primitive and a PHY-RXSTART.indication primitive for the UHR TB PPDU solicited by the AP.

The PHY includes the measured RSSI and RSSI_LEGACY values in the PHY-RXSTART.indication(RXVECTOR) primitive issued to the MAC.

After the PHY-CCA.indication(BUSY, channel-list) primitive is issued, the PHY entity shall begin receiving the training symbols and searching for L-SIG in order to set the maximum duration of the data stream. Then the PHY will search for the preambles for non-HT, HT-MF, VHT, HE, EHT and UHR PPDU. If the constellation used in the first symbol after the first long training field is QBPSK, the PHY entity shall continue to detect the received signal using the receive procedure for HT-GF depicted in Clause 19 (High Throughput (HT) PHY specification). For detecting the UHR preamble, the PHY entity shall search for RL-SIG and evaluate the LENGTH field. If RL-SIG is detected, the PHY entity should check the parity bit and RATE fields in L-SIG(#5809) and RL-SIG. If either the check of the parity bit is invalid or the RATE field is not set to 6 Mb/s, neither a PHY-RXEARLYSIG.indication nor a PHY-RXSTART.indication primitive is issued. If the check of the parity bit is valid and the RATE field indicates 6 Mb/s but the LENGTH field value in L-SIG is (#5861)not a multiple of three, neither a PHY-RXEARLYSIG.indication nor a PHY-RXSTART.indication primitive is issued. A PHY entity may determine from L-SIG that UHR PPDU format is(#8559) excluded via other means, in which case neither a PHY-RXEARLYSIG.indication nor a PHY-RXSTART.indication primitive is issued. If the UHR preamble is(#5810, 8560) not detected, the PHY should continue to detect the received signal using non-HT, HT, VHT, and HE receive procedure in Clause 17 (Orthogonal frequency division multiplexing (OFDM) PHY specification), Clause 19 (High Throughput (HT) PHY specification), Clause 21 (Very High Throughput (VHT) PHY specification), Clause 27 (High Efficiency (HE) PHY specification) and Clause 36 (Extremely high throughput (EHT) PHY specification) respectively.

If a valid parity bit and the RATE with 6 Mb/s are indicated in L-SIG and RL-SIG and the LENGTH field value in L-SIG and RL-SIG is a multiple of three, U-SIG field is present after RL-SIG. The(#5811) PHY entity shall issue a PHY-RXEARLYSIG.indication primitive and shall begin receiving the U-SIG field and identify the PPDU version based on the PHY Version Identifier field in the U-SIG field. The PHY entity shall receive the U-SIG field. Then the PHY entity shall check the CRC of the U-SIG field.

Copyright © 2025 IEEE. All rights reserved.
This is an unapproved IEEE Standards Draft, subject to change.

— If the U-SIG field indicates a valid CRC, the PHY entity shall report the version independent fields in the U-SIG field (e.g., TXOP, BSS color, and Bandwidth) to the MAC entity.

— If the U-SIG field indicates a valid CRC, and the PHY version identifier or the BSS color(s) or the UL/DL field(#11626) does not contain an intended value, the PHY entity shall issue a PHY-RXSTART.indication(RXVECTOR) then issue a PHY-RXEND.indication(Filtered) if the PHY entity is not ELR capable. Otherwise, the PHY entity should continue searching for the ELR-MARK.

— If the U-SIG field indicates a valid CRC and the U-SIG field indicates a Validate U-SIG indication, the PHY shall issue the error condition PHY-RXEND.indication(FormatViolation) primitive and maintain PHY-CCA.indication(BUSY, channellist) primitive for the predicted duration of the transmitted PPDU derived from the LENGTH field in L-SIG as defined in Equation (36-64)(#5369) unless it receives a PHY-CCARESET.request primitive before the end of the PPDU, for instance,(#5812) during spatial reuse operation as described in 37.3 (UHR spatial(#7563) reuse operation) if the PHY entity is not ELR capable. Otherwise, the PHY entity should continue searching for the ELR-MARK. A Validate U-SIG indication is defined as a Validate field in the U-SIG field being set to 0 or a field value of a field in the U-SIG field being set to a Validate state.

— If the U-SIG field indicates a valid CRC and the U-SIG field indicates a Disregard U-SIG indication, the PHY entity shall continue processing the U-SIG. A Disregard U-SIG indication is defined as a Disregard field in the U-SIG field being set to any value or a field value of a field in the U-SIG field being set to a Disregard state. The PHY entity shall not process the Disregard field.

— If the U-SIG field indicates an invalid CRC,(#4076) the PHY shall issue the error condition PHY-RXEND.indication(FormatViolation) primitive and maintain PHY-CCA.indication(BUSY, channellist) primitive for the predicted duration of the transmitted PPDU derived from the LENGTH field in L-SIG as defined in Equation (38-72) unless it receives a PHY-CCARESET.request primitive before the end of the PPDU for instance during spatial reuse operation as described in 37.3 (UHR spatial(#7563) reuse operation) if the PHY entity is not ELR capable. Otherwise, the PHY entity should continue searching for the ELR-MARK.

$$\mathrm{RXTIME}(\mu\mathrm{s}) = \frac{\mathrm{LENGTH} + 3}{3} \times 4 + 20 + SignalExtension \tag{38-72}$$

where

LENGTH is the value of the LENGTH field in L-SIG.

SignalExtension is defined in Table 27-61 (HE PHY characteristics).

If the(#7213) U-SIG field is valid, and the PHY version identifier, the BSS color(s), the UL/DL, the PPDU Type and compression mode, and the Co-BF/Co-SR indication all indicate(#5813) an intended value, then the PHY entity will parse the PPDU Type And Compression Mode subfield, the UL/DL subfield(#5814) and the Co-BF/Co-SR indication subfield in the U-SIG field (B2 of U-SIG-2) to identify the UHR PPDU type.

If the received PPDU is a(#7214) UHR MU PPDU, the PHY entity shall begin receiving the UHR-SIG, UHR-STF, and UHR-LTF fields for the UHR MU PPDU as shown in Figure 38-30 (PHY receive procedure for a UHR MU PPDU). The PHY entity shall check the CRC of the Common field of UHR-SIG.

— If the CRCs protecting the Common field of the(#7215) UHR-SIG field are valid, for all supported modes, unsupported modes and Validate indication, the PHY entity shall maintain PHY-CCA.indication(BUSY, channellist) primitive for the predicted duration of the transmitted PPDU, as defined by RXTIME in Equation (38-73)(#9104), unless it receives a PHY-CCARESET.request primitive before the end of the PPDU,(#5817) for instance, during spatial reuse operation as described in 37.3 (UHR spatial(#7563) reuse operation). A Validate UHR-SIG indication is defined as a field value of a subfield either in the (#11627, Ed)UHR-SIG Common field or in the receiver's own User field being set to a Validate state.

Copyright © 2025 IEEE. All rights reserved.
This is an unapproved IEEE Standards Draft, subject to change.

— If the UL/DL subfield of the U-SIG field is set to 0 and the CRCs protecting the Common field of the UHR-SIG field are valid, the PHY entity shall search for intended STA-ID (based on the intended BSS color indication if Co-BF/Co-SR is used) in each User field. If an intended STA-ID is detected in a user encoding block or an intended STA-ID is detected in the common encoding block of UHR-SIG (STA-ID can be present in the common encoding block of UHR-SIG only if the PPDU type and compression mode and UL/DL indicate a DL non-OFDMA transmission) with valid CRC, and an unsupported mode or a Validate UHR-SIG indication is not indicated, the PHY entity shall continue receiving the UHR-STF after the UHR-SIG field.

— If the receiving PHY entity is contained in an AP, the UL/DL subfield of the U-SIG field is set to 1, the value of the BSS Color subfield matches a value in the PHYCONFIG VECTOR parameter BSS_COLOR_LIST, the CRC protecting the common encoding block of the UHR-SIG field is valid and an unsupported mode or a Validate UHR-SIG indication is not indicated, the PHY entity may check the STA-ID in the User field.

- (#4978, 9105)If the PHY entity checks the STA-ID in the User field and the STA-ID value matches the 11 LSBs of the AID of a STA in the AP's BSS, then the PHY shall continue receiving the UHR-STF after the UHR-SIG field.
- (#4978, 9105)If the PHY entity does not check the STA-ID in the User field, then the PHY shall continue receiving the UHR-STF after the UHR-SIG field.

— If the UL/DL subfield of the U-SIG field is set to 0 and the CRCs protecting the Common field of the UHR-SIG field are valid and no intended STA-ID (based on the intended BSS color indication if Co-BF/Co-SR is used) is detected in all the User fields, the PHY entity shall issue a PHY-RXSTART.indication(RXVECTOR) then issue a PHY- RXEND.indication(Filtered).

— If the UL/DL subfield of the U-SIG field is set to 0 and the CRCs protecting the Common field of the UHR-SIG field are valid and an intended STA-ID (based on the intended BSS color indication if Co-BF/Co-SR is used) is detected, but an unsupported mode or a Validate UHR-SIG indication is indicated in UHR-SIG field, the PHY shall issue a PHY- RXSTART.indication(RXVECTOR) then issue a PHY-RXEND.indication(UnsupportedRate) primitive.

— If the UL/DL subfield of the U-SIG field is set to 1 and the CRC protecting the common encoding block of the UHR-SIG field is valid, but an unsupported mode or a Validate UHR-SIG indication is indicated in UHR-SIG field, the PHY shall issue a PHY-RXSTART.indication(RXVECTOR) then issue a PHY-RXEND.indication(UnsupportedRate) primitive.

— If the CRCs protecting the Common field of the UHR-SIG field are not valid, the PHY shall issue the error condition PHY-RXEND.indication(FormatViolation) primitive and maintain PHY- CCA.indication(BUSY, channellist) primitive for the predicted duration of the transmitted PPDU derived from the LENGTH field in L-SIG as defined in Equation (38-72) unless it receives a PHY- CCARESET.request primitive before the end of the PPDU for instance during spatial reuse operation as described in 37.3 (UHR spatial(#7563) reuse operation).

If the received PPDU is a(#7216) UHR TB PPDU, the PHY entity shall continue receiving the UHR-STF and UHR- LTF for a UHR TB PPDU shown in Figure 38-31 (PHY receive procedure for a UHR TB PPDU). If a STA receives a UHR TB PPDU and the TRIGVECTOR parameters are not present in its PHY entity, the STA shall use Equation (38-72) to calculate the predicted duration of the UHR TB PPDU.

If the(#7217) U-SIG indicates the received PPDU is a UHR ELR PPDU and the three ELR Validate bits are all ones and STA-ID value matches the 11 LSBs of the AID of the receive STA, the PHY entity may skip the ELR-MARK detection and continue receiving the UHR-STF and UHR- LTF and ELR-SIG shown in Figure 38-32 (PHY receive procedure for a UHR ELR PPDU).

If the(#7218) L-SIG, HT-SIG, VHT-SIG-A, HE-SIG-A, or U-SIG are invalid, the ELR capable PHY entity should begin detecting ELR-MARK for UHR ELR PPDU as shown in Figure 38-32 (PHY receive procedure for a UHR ELR PPDU). The PHY entity shall detect the ELR-MARK using the known MARK sequence corresponding to its current BSS color.

Copyright © 2025 IEEE. All rights reserved.
This is an unapproved IEEE Standards Draft, subject to change.

If the PHY entity is in parallel receive procedures and ELR-MARK is not detected, the PHY entity should continue with other non-ELR PPDU receive procedures.

If the PHY entity got invalid SIG in receiving L-SIG, HT-SIG, VHT-SIG, HE-SIG, or U-SIG in other non-ELR PPDU mode and ELR-MARK is not detected, the PHY entity should continue with other non-ELR PPDU receive procedure and set PHY-CCA.indication(BUSY, channellist) primitive for the predicted duration of the transmitted PPDU.

If ELR-MARK is detected, or the received PPDU is UHR ELR PPDU intended for the STA that is detected from U-SIG such that the ELR-MARK detection is bypassed, the PHY entity shall continue receiving the UHR-STF and UHR- LTF and ELR-SIG for a UHR ELR PPDU shown in Figure 38-32 (PHY receive procedure for a UHR ELR PPDU)(#5370). The PHY entity shall check the CRCs of ELR-SIG1 and ELR-SIG2.

— If the CRC protecting ELR-SIG1 is not valid, the PHY shall issue the error condition PHY-RXEND.indication(FormatViolation) primitive and maintain PHY- CCA.indication(BUSY, channellist) primitive for the predicted duration of the transmitted PPDU derived from the LENGTH field in L-SIG as defined in Equation (38-72) if L-SIG is valid. (#5155)If L-SIG is invalid, neither a PHY-RXEARLYSIG.indication nor a PHY-RXSTART.indication primitive is issued.
— If the CRC protecting ELR-SIG1 is valid, the UL/DL does not contain an intended value, the PHY entity shall issue a PHY-RXSTART.indication(RXVECTOR) then issue a PHY-RXEND.indication(Filtered). The PHY shall maintain PHY- CCA.indication(BUSY, channellist) primitive for the predicted duration of the transmitted PPDU derived from the LENGTH field in ELR-SIG1 as defined in Equation (38-73).
— If the CRC protecting ELR-SIG1 is valid and the UL/DL contains an intended value, the PHY shall continue to check CRC of ELR-SIG2
— If the CRC protecting ELR-SIG2 is not valid, the PHY shall issue the error condition PHY-RXEND.indication(FormatViolation) primitive and maintain PHY- CCA.indication(BUSY, channellist) primitive for the predicted duration of the transmitted PPDU derived from the LENGTH field in ELR-SIG1 as defined in Equation (38-73).
— If the CRC protecting ELR-SIG2 is valid, the STA-ID in ELR-SIG2 does not match the 11 LSBs of the AID of a STA in the AP's BSS, then the PHY entity shall issue a PHY-RXSTART.indication(RXVECTOR) then issue a PHY-RXEND.indication(Filtered). The PHY shall maintain PHY-CCA.indication(BUSY, channellist) primitive for the predicted duration of the transmitted PPDU derived from the LENGTH field in ELR-SIG1 as defined in Equation (38-73).
— If the CRC protecting ELR-SIG2 is valid, the STA-ID in ELR-SIG2 matches the 11 LSBs of the AID of a STA in the AP's BSS, then the PHY entity shall continue receiving the Data field of the PSDU.

If signal loss occurs during reception prior to completion of the PSDU reception, the error condition PHY-RXEND.indication(CarrierLost) shall be reported to the MAC. After waiting for the end of the PPDU as determined by Equation (38-73), the PHY shall set the PHY-CCA.indication(IDLE) primitive and return to the RX IDLE state.

$$\text{RXTIME}(\mu\text{s}) = 20 + T_{UHR_PREAMBLE} + N_{SYM}T_{SYM} + T_{PE} + SignalExtension \quad (38\text{-}73)$$

where

$T_{UHR_PREAMBLE}$ is defined in Equation (38-74).(#5371, 9106)

Copyright © 2025 IEEE. All rights reserved.
This is an unapproved IEEE Standards Draft, subject to change.

$$T_{\text{UHR-PREAMBLE}} \tag{38-74}$$

$$= \begin{cases} T_{\text{RL-SIG}} + T_{\text{U-SIG}} + N_{\text{UHR-SIG}} T_{\text{UHR-SIG}} + T_{\text{UHR-STF-NT}} + N_{\text{UHR-LTF}} T_{\text{UHR-LTF-SYM}}, & \text{for a UHR MU PPDU} \\ T_{\text{RL-SIG}} + T_{\text{U-SIG}} + T_{\text{UHR-STF-T}} + N_{\text{UHR-LTF}} T_{\text{UHR-LTF-SYM}}, & \text{for a UHR TB PPDU} \\ T_{\text{RL-SIG}} + T_{\text{U-SIG}} + T_{\text{ELR-MARK}} + T_{\text{UHR-STF-NT}} + N_{\text{UHR-LTF}} T_{\text{UHR-LTF,ELR}} + T_{\text{ELR-SIG}}, & \text{for a UHR ELR PPDU} \end{cases}$$

N_{SYM} is defined in Equation (36-95), Equation (36-93), and Equation (38-46), respectively for UHR MU PPDU, UHR TB PPDU and UHR ELR PPDU.

T_{SYM} and T_{PE} are calculated as in 38.3.17 (Packet extension).(#4507)

SignalExtension takes the value of aSignalExtension as defined in Table 27-61 (HE PHY characteristics).

The received PSDU bits are assembled into octets and present to the MAC using a series of PHY-DATA.indication(DATA) primitive exchanges. Any final bits that cannot be assembled into a complete octet are considered pad bits and discarded. After the reception of the final bit of the last PSDU octet, and possible padding and tail bits, the PHY entity shall check whether packet extension and/or signal extension is applied. If packet extension and/or signal extension is applied, the PHY entity shall wait until the packet extension and/or signal extension expires before issuing a PHY-RXEND.indication (NoError, RXVECTOR) returning to the RX IDLE state, as shown in Figure 38-33 (PHY receive state machine for a UHR PPDU).

38.3.30 Channel numbering and channelization

Channel numbering and channelization for UHR STAs are the same as those for EHT STAs. See 36.3.24 (Channel numbering and channelization).

38.3.31 Regulatory requirements

WLANs implemented in accordance with this standard are subject to equipment certification and operating requirements established by regional and national regulatory administrations. The PHY specification establishes minimum technical requirements for interoperability, based upon established regulations at the time this standard was issued. These regulations are subject to change. Requirements that are subject to local geographic regulations are annotated within the PHY specification. Regulatory requirements that do not affect interoperability are not addressed in this standard. Implementers are referred to the regulatory sources in Annex D for further information. Operation in countries within defined regulatory domains might be subject to additional or alternative national regulations.

38.4 UHR PLME

38.4.1 PLME_SAP sublayer management primitives

Table 38-59 (UHR PHY MIB attributes) lists the MIB attributes that are accessible by the PHY entities and the intralayer of higher level LMEs. These attributes are accessed via the PLME-GET, PLME-SET, PLME-RESET, and PLME-CHARACTERISTICS primitives defined in 6.5 (PLME SAP interface).

38.4.2 PHY MIB

UHR PHY MIB attributes for an EHT STA are defined in Annex C with specific values defined in Table 15-4 (MIB attribute default values/ranges), Table 16-3 (MIB attribute default values/ranges), Table 17-23 (MIB attribute default values/ranges), Table 18-4 (MIB attribute default values/ranges), Table 19-24 (HT PHY MIB attributes), Table 21-27 (VHT PHY MIB attributes), Table 27-60 (HE PHY MIB attributes), and

Copyright © 2025 IEEE. All rights reserved.
This is an unapproved IEEE Standards Draft, subject to change.

Table 38-59 (UHR PHY MIB attributes) and Table 38-59 (UHR PHY MIB attributes). The "Operational semantics" column in Table 38-59 (UHR PHY MIB attributes) contains two types: static and dynamic.

— Static MIB attributes are fixed and cannot be modified for a given PHY implementation.

— Dynamic MIB attributes are interpreted according to the MAX-ACCESS field of the MIB attribute. If MAX-ACCESS is equal to read-only, the MIB attribute value may be updated by the PLME and read from the MIB attribute by management entities. If MAX-ACCESS is equal to read-write, the MIB attribute may be read and written by management entities.

Table 38-59—UHR PHY MIB attributes

Managed object	Default value/ range	Operational semantics
dot11PHYOperationTable		
dot11PHYType	uhr	Static
dot11PHYUHRTable		
dot11UHRCurrentChannelWidth	Implementation dependent	Dynamic
dot11UHRCurrentChannelCenterFrequencyIndex0	Implementation dependent	Dynamic
dot11UHRDisabledSubchannelBitmap	0/0...65 535	Dynamic
dot11PHYUHRCoordinatedBeamformingConfigTable		
dot11UHRMaxNssTotalRxForDLMUMIMOLessThanOrEqualto80	Implementation dependent	Dynamic
dot11UHRMaxNssTotalRxForDLMUMIMOEqualto160	Implementation dependent	Dynamic
dot11UHRMaxNssTotalRxForDLMUMIMOEqualto320	Implementation dependent	Dynamic
dot11PHYNonPrimaryChannelAccesssConfigTable		
dot11NPCAPrimaryChannel	Implementation dependent	Dynamic

38.4.3 TXTIME and PSDU_LENGTH calculation

The value of the TXTIME parameter returned by the PLME-TXTIME.confirm primitive shall be calculated for a UHR PPDU using Equation (38-75).

$$\text{TXTIME} = 20 + T_{\text{UHR-PREAMBLE}} + N_{SYM}T_{SYM} + T_{PE} + SignalExtension \quad (38\text{-}75)$$

where

$T_{\text{UHR-PREAMBLE}}$ is defined as in Equation (38-74)(#Ed).

$SignalExtension$ takes the value of aSignalExtension as defined in Table 27-61 (HE PHY characteristics).

Copyright © 2025 IEEE. All rights reserved.
This is an unapproved IEEE Standards Draft, subject to change.

For a UHR MU PPDU, the total number of data OFDM symbols, N_{SYM}, is given in 38.3.16.3.5 (Encoding process for a UHR MU PPDU).

For a UHR TB PPDU, the total number of data OFDM symbols, N_{SYM}, is given in 38.3.16.3.6 (Encoding process for a UHR TB PPDU).

For a UHR ELR PPDU, the total number of data OFDM symbols, N_{SYM}, is given in 38.3.16.3.7 (Encoding process for a UHR ELR PPDU).

T_{PE} is given in 38.3.17 (Packet extension).

The value of the PSDU_LENGTH parameter for user *u* returned in the PLME-TXTIME.confirm primitive and RXVECTOR, for a UHR TB PPDU and a UHR MU PPDU is calculated the same as the description in 36.4.3 (TXTIME and PSDU_LENGTH calculation).

The value of the PSDU_LENGTH parameter returned in the PLME-TXTIME.confirm primitive for a UHR ELR PPDU is calculated using Equation (38-76) and Equation (38-77) using BCC and LDPC, respectively.

$$\text{PSDU_LENGTH} = \left\lfloor \frac{N_{SYM} N_{DBPS} - N_{service} - N_{tail}}{8} \right\rfloor \tag{38-76}$$

$$\text{PSDU_LENGTH} = \left\lfloor \frac{N_{SYM} N_{DBPS} - N_{service}}{8} \right\rfloor \tag{38-77}$$

where

$N_{SYM,\,init}$ is given by Equation (38-42).

N_{DBPS} is given in Table 38-21 (Frequently used parameters).

For a UHR ELR PPDU, the value of the RXVECTOR parameter PSDU_LENGTH is calculated using Equation (38-78).

$$\text{PSDU_LENGTH} = \left\lfloor \frac{N_{SYM,\,RX} N_{DBPS} - N_{service} - N_{tail}}{8} \right\rfloor \tag{38-78}$$

where

$N_{SYM,\,RX}$ is given by Equation (38-79).

$N_{service}$ and N_{tail} are defined in Table 38-21 (Frequently used parameters).

$$N_{SYM,\,RX} = \begin{cases} N_{SYM} - 1, & \text{if LDPC coding is used,the LDPC Extra Symbol Segment field of ELR-SIG is equal to 1} \\ N_{SYM}, & \text{otherwise} \end{cases} \tag{38-79}$$

where

N_{SYM} is given by Equation (38-46).

(38-80)

Copyright © 2025 IEEE. All rights reserved.
This is an unapproved IEEE Standards Draft, subject to change.

38.4.4 UHR PHY

The static EHT PHY characteristics are provided through the PLME-CHARACTERISTICS service primitive. If listed in Table 38-60 (UHR PHY characteristics), then the static UHR PHY characteristics shall be as shown in Table 38-60 (UHR PHY characteristics). Otherwise, if listed in Table 36-70 (EHT PHY characteristics), then the static EHT PHY characteristics shall be as shown in Table 36-70 (EHT PHY characteristics). Otherwise, if listed in Table 27-61 (HE PHY characteristics), then the static EHT PHY characteristics shall be as shown in Table 27-61 (HE PHY characteristics). Otherwise, the static UHR PHY characteristics shall be as shown in Table 19-25 (HT PHY characteristics). The definitions for these characteristics are given in 6.5 (PLME SAP interface).

Table 38-60—UHR PHY characteristics

Characteristics	Value
aPPDUMaxTime	5.484 ms
aPSDUMaxLength	15 523 198 bytes
aRxPHYStartDelay	$32 + 4 \times N_{\text{UHR-SIG}}$ µs for UHR MU PPDUs 32 µs for UHR TB PPDUs

38.5 Parameters for UHR-MCSs

The rate-dependent parameters for various RU or MRU sizes using $N_{SS,u} = 1$ are provided in Table 38-61 (UHR-MCSs for 26-tone RU, NSS,u = 1) through Table 38-76 (UHR-MCSs for 4×996-tone RU, NSS,u = 1).

For EQM transmission, $N_{CBPS,u}$ for a given UHR-MCS M using $N_{SS,u}$ (>1) can be obtained as the product of $N_{SS,u}$ and $N_{CBPS,u}$ for UHR-MCS M using $N_{SS,u} = 1$.

For UEQM transmission, $N_{CBPS,u}$ for a given UEQM pattern {s-Δ_m} in m-th spatial stream using $N_{SS,u}$ (>1) can be obtained using Equation (38-81).

$$N_{CBPS,u} = \sum_{m=1}^{N_{SS,u}} N_{CBPS,m,u} \tag{38-81}$$

where

$N_{CBPS,m,u}$ can be obtained as $N_{CBPS,u}$ in Table 38-61 (UHR-MCSs for 26-tone RU, NSS,u = 1) through Table 38-76 (UHR-MCSs for 4×996-tone RU, NSS,u = 1) corresponding to the modulation and code rate of the m-th spatial stream, where the coding rate is the same as the first stream and the modulation is determined based on the constellation index {s-Δ_m} of spatial stream m.

Δ_m is the number of modulation levels lower than s in the m-th spatial stream. Δ_m is defined in Table 38-33 (UEQM pattern subfield encoding), and Δ_1 is always 0.

Copyright © 2025 IEEE. All rights reserved.
This is an unapproved IEEE Standards Draft, subject to change.

$N_{DBPS,u}$ and data rate in megabits per second (D) are computed using Equation (38-82) and Equation (38-83), respectively.

$$N_{DBPS,u} = \lfloor N_{CBPS,u} \cdot R_u \rfloor \tag{38-82}$$

$$D = \frac{N_{DBPS,u}}{12.8 + T_{GI,Data}} \tag{38-83}$$

where

R_u is the coding rate for user u, $u = 0, 1, \ldots, N_{user,total} - 1$.

$T_{GI,Data}$ is the GI duration for the Data field in microseconds.

UHR-MCS 15 is supported only with $N_{SS,u} = 1$.

UHR-MCSs 0–13, 15, 17, 19, 20 and 23 are defined for user u in SU transmission or MU transmission. UHR-MCSs 14, 16, 18, 21, 22, 24-31 are not defined.

38.5.1 UHR-MCSs for 26-tone RU

The rate-dependent parameters for the 26-tone RU are provided in Table 38-61 (UHR-MCSs for 26-tone RU, NSS,u = 1).

Table 38-61—UHR-MCSs for 26-tone RU, $N_{SS,u}$ = 1

UHR-MCS index	Modulation	R_u	$N_{BPSCS,u}$	$N_{SD,u}$	$N_{CBPS,u}$	$N_{DBPS,u}$	Data rate (Mb/s)		
							0.8 µs GI	1.6 µs GI	3.2 µs GI
0	BPSK	1/2	1	24	24	12	0.9	0.8	0.8
1	QPSK	1/2	2		48	24	1.8	1.7	1.5
2		3/4				36	2.6	2.5	2.3
3	16-QAM	1/2	4		96	48	3.5	3.3	3.0
4		3/4				72	5.3	5.0	4.5
5	64-QAM	2/3	6		144	96	7.1	6.7	6.0
6		3/4				108	7.9	7.5	6.8
7		5/6				120	8.8	8.3	7.5
8	256-QAM	3/4	8		192	144	10.6	10.0	9.0
9		5/6				160	11.8	11.1	10.0
10	1024-QAM	3/4	10		240	180	13.2	12.5	11.3
11		5/6				200	14.7	13.9	12.5
12	4096-QAM	3/4	12		288	216	15.9	15.0	13.5
13		5/6				240	17.6	16.7	15.0
15	BPSK-DCM	1/2	1	12	12	6	0.4	0.4	0.4

Copyright © 2025 IEEE. All rights reserved.
This is an unapproved IEEE Standards Draft, subject to change.

Table 38-61—UHR-MCSs for 26-tone RU, $N_{SS,u}$ = 1 *(continued)*

UHR-MCS index	Modulation	R_u	$N_{BPSCS,u}$	$N_{SD,u}$	$N_{CBPS,u}$	$N_{DBPS,u}$	Data rate (Mb/s)		
							0.8 µs GI	1.6 µs GI	3.2 µs GI
17	QPSK	2/3	2	24	48	32	2.4	2.2	2.0
19	16-QAM	2/3	4		96	64	4.7	4.4	4.0
20	16-QAM	5/6	4		96	80	5.9	5.6	5.0
23	256-QAM	2/3	8		192	128	9.4	8.9	8.0

38.5.2 UHR-MCSs for 52-tone RU

The rate-dependent parameters for the 52-tone RU are provided in Table 38-62 (UHR-MCSs for 52-tone RU, NSS,u = 1).

Table 38-62—UHR-MCSs for 52-tone RU, $N_{SS,u}$ = 1

UHR-MCS index	Modulation	R_u	$N_{BPSCS,u}$	$N_{SD,u}$	$N_{CBPS,u}$	$N_{DBPS,u}$	Data rate (Mb/s)		
							0.8 µs GI	1.6 µs GI	3.2 µs GI
0	BPSK	1/2	1	48	48	24	1.8	1.7	1.5
1	QPSK	1/2	2		96	48	3.5	3.3	3.0
2		3/4				72	5.3	5.0	4.5
3	16-QAM	1/2	4		192	96	7.1	6.7	6.0
4		3/4				144	10.6	10.0	9.0
5	64-QAM	2/3	6		288	192	14.1	13.3	12.0
6		3/4				216	15.9	15.0	13.5
7		5/6				240	17.6	16.7	15.0
8	256-QAM	3/4	8		384	288	21.2	20.0	18.0
9		5/6				320	23.5	22.2	20.0
10	1024-QAM	3/4	10		480	360	26.5	25.0	22.5
11		5/6				400	29.4	27.8	25.0
12	4096-QAM	3/4	12		576	432	31.8	30.0	27.0
13		5/6				480	35.3	33.3	30.0
15	BPSK-DCM	1/2	1	24	24	12	0.9	0.8	0.8
17	QPSK	2/3	2	48	96	64	4.7	4.4	4.0
19	16-QAM	2/3	4		192	128	9.4	8.9	8.0
20	16-QAM	5/6	4		192	160	11.8	11.1	10.0
23	256-QAM	2/3	8		384	256	18.8	17.8	16.0

Copyright © 2025 IEEE. All rights reserved.
This is an unapproved IEEE Standards Draft, subject to change.

38.5.3 UHR-MCSs for 52+26-tone MRU

The rate-dependent parameters for the 52+26-tone MRU are provided in Table 38-63 (UHR-MCSs for 52+26-tone MRU, NSS,u = 1).

Table 38-63—UHR-MCSs for 52+26-tone MRU, $N_{SS,u}$ = 1

UHR-MCS index	Modulation	R_u	$N_{BPSCS,u}$	$N_{SD,u}$	$N_{CBPS,u}$	$N_{DBPS,u}$	Data rate (Mb/s)		
							0.8 µs GI	1.6 µs GI	3.2 µs GI
0	BPSK	1/2	1	72	72	36	2.6	2.5	2.3
1	QPSK	1/2	2		144	72	5.3	5.0	4.5
2		3/4				108	7.9	7.5	6.8
3	16-QAM	1/2	4		288	144	10.6	10.0	9.0
4		3/4				216	15.9	15.0	13.5
5	64-QAM	2/3	6		432	288	21.2	20.0	18.0
6		3/4				324	23.8	22.5	20.3
7		5/6				360	26.5	25.0	22.5
8	256-QAM	3/4	8		576	432	31.8	30.0	27.0
9		5/6				480	35.3	33.3	30.0
10	1024-QAM	3/4	10		720	540	39.7	37.5	33.8
11		5/6				600	44.1	41.7	37.5
12	4096-QAM	3/4	12		864	648	47.6	45.0	40.5
13		5/6				720	52.9	50.0	45.0
15	BPSK-DCM	1/2	1	36	36	18	1.3	1.3	1.1
17	QPSK	2/3	2	72	144	96	7.1	6.7	6.0
19	16-QAM	2/3	4		288	192	14.1	13.3	12.0
20	16-QAM	5/6	4		288	240	17.6	16.7	15.0
23	256-QAM	2/3	8		576	384	28.2	26.7	24.0

Copyright © 2025 IEEE. All rights reserved.
This is an unapproved IEEE Standards Draft, subject to change.

38.5.4 UHR-MCSs for 106-tone RU

The rate-dependent parameters for the 106-tone RU are provided in Table 38-64 (UHR-MCSs for 106-tone RU, NSS,u = 1).

Table 38-64—UHR-MCSs for 106-tone RU, $N_{SS,u}$ = 1

UHR-MCS index	Modulation	R_u	$N_{BPSCS,u}$	$N_{SD,u}$	$N_{CBPS,u}$	$N_{DBPS,u}$	Data rate (Mb/s)		
							0.8 µs GI	1.6 µs GI	3.2 µs GI
0	BPSK	1/2	1	102	102	51	3.8	3.5	3.2
1	QPSK	1/2	2		204	102	7.5	7.1	6.4
2		3/4				153	11.3	10.6	9.6
3	16-QAM	1/2	4		408	204	15.0	14.2	12.8
4		3/4				306	22.5	21.3	19.1
5	64-QAM	2/3	6		612	408	30.0	28.3	25.5
6		3/4				459	33.8	31.9	28.7
7		5/6				510	37.5	35.4	31.9
8	256-QAM	3/4	8		816	612	45.0	42.5	38.3
9		5/6				680	50.0	47.2	42.5
10	1024-QAM	3/4	10		1 020	765	56.3	53.1	47.8
11		5/6				850	62.5	59.0	53.1
12	4096-QAM	3/4	12		1 224	918	67.5	63.8	57.4
13		5/6				1 020	75.0	70.8	63.8
15	BPSK-DCM	1/2	1	51	51	25	1.8	1.7	1.6
17	QPSK	2/3	2	102	204	136	10.0	9.4	8.5
19	16-QAM	2/3	4		408	272	20.0	18.9	17.0
20	16-QAM	5/6	4		408	340	25.0	23.6	21.3
23	256-QAM	2/3	8		816	544	40.0	37.8	34.0

Copyright © 2025 IEEE. All rights reserved.
This is an unapproved IEEE Standards Draft, subject to change.

38.5.5 UHR-MCSs for 106+26-tone MRU

The rate-dependent parameters for the 106+26-tone MRU are provided in Table 38-65 (UHR-MCSs for 106+26-tone MRU, NSS,u = 1),

Table 38-65—UHR-MCSs for 106+26-tone MRU, $N_{SS,u}$ = 1

UHR-MCS index	Modulation	R_u	$N_{BPSCS,u}$	$N_{SD,u}$	$N_{CBPS,u}$	$N_{DBPS,u}$	Data rate (Mb/s)		
							0.8 µs GI	1.6 µs GI	3.2 µs GI
0	BPSK	1/2	1	126	126	63	4.6	4.4	3.9
1	QPSK	1/2	2		252	126	9.3	8.8	7.9
2		3/4				189	13.9	13.1	11.8
3	16-QAM	1/2	4		504	252	18.5	17.5	15.8
4		3/4				378	27.8	26.3	23.6
5	64-QAM	2/3	6		756	504	37.1	35.0	31.5
6		3/4				567	41.7	39.4	35.4
7		5/6				630	46.3	43.8	39.4
8	256-QAM	3/4	8		1 008	756	55.6	52.5	47.3
9		5/6				840	61.8	58.3	52.5
10	1024-QAM	3/4	10		1 260	945	69.5	65.6	59.1
11		5/6				1 050	77.2	72.9	65.6
12	4096-QAM	3/4	12		1 512	1 134	83.4	78.8	70.9
13		5/6				1 260	92.6	87.5	78.8
15	BPSK-DCM	1/2	1	63	63	31	2.3	2.2	1.9
17	QPSK	2/3	2	126	252	168	12.4	11.7	10.5
19	16-QAM	2/3	4		504	336	24.7	23.3	21.0
20	16-QAM	5/6	4		504	420	30.9	29.2	26.3
23	256-QAM	2/3	8		1008	672	49.4	46.7	42.0

Copyright © 2025 IEEE. All rights reserved.
This is an unapproved IEEE Standards Draft, subject to change.

38.5.6 UHR-MCSs for 242-tone RU

The rate-dependent parameters for the 242-tone RU are provided in Table 38-66 (UHR-MCSs for 242-tone RU, NSS,u = 1).

Table 38-66—UHR-MCSs for 242-tone RU, $N_{SS,u}$ = 1

UHR-MCS index	Modulation	R_u	$N_{BPSCS,u}$	$N_{SD,u}$	$N_{CBPS,u}$	$N_{DBPS,u}$	Data rate (Mb/s)		
							0.8 µs GI	1.6 µs GI	3.2 µs GI
0	BPSK	1/2	1	234	234	117	8.6	8.1	7.3
1	QPSK	1/2	2		468	234	17.2	16.3	14.6
2		3/4				351	25.8	24.4	21.9
3	16-QAM	1/2	4		936	468	34.4	32.5	29.3
4		3/4				702	51.6	48.8	43.9
5	64-QAM	2/3	6		1 404	936	68.8	65.0	58.5
6		3/4				1 053	77.4	73.1	65.8
7		5/6				1 170	86.0	81.3	73.1
8	256-QAM	3/4	8		1 872	1 404	103.2	97.5	87.8
9		5/6				1 560	114.7	108.3	97.5
10	1024-QAM	3/4	10		2 340	1 755	129.0	121.9	109.7
11		5/6				1 950	143.4	135.4	121.9
12	4096-QAM	3/4	12		2 808	2 106	154.9	146.3	131.6
13		5/6				2 340	172.1	162.5	146.3
15	BPSK-DCM	1/2	1	117	117	58	4.3	4.0	3.6
17	QPSK	2/3	2	234	468	312	22.9	21.7	19.5
19	16-QAM	2/3	4		936	624	45.9	43.3	39.0
20	16-QAM	5/6	4		936	780	57.4	54.2	48.8
23	256-QAM	2/3	8		1872	1248	91.8	86.7	78.0

Copyright © 2025 IEEE. All rights reserved.
This is an unapproved IEEE Standards Draft, subject to change.

38.5.7 UHR-MCSs for 484-tone RU

The rate-dependent parameters for the 484-tone RU are provided in Table 38-67 (UHR-MCSs for 484-tone RU, NSS,u = 1).

Table 38-67—UHR-MCSs for 484-tone RU, $N_{SS,u}$ = 1

UHR-MCS index	Modulation	R_u	$N_{BPSCS,u}$	$N_{SD,u}$	$N_{CBPS,u}$	$N_{DBPS,u}$	Data rate (Mb/s)		
							0.8 µs GI	1.6 µs GI	3.2 µs GI
0	BPSK	1/2	1	468	468	234	17.2	16.3	14.6
1	QPSK	1/2	2		936	468	34.4	32.5	29.3
2		3/4				702	51.6	48.8	43.9
3	16-QAM	1/2	4		1 872	936	68.8	65.0	58.5
4		3/4				1 404	103.2	97.5	87.8
5	64-QAM	2/3	6		2 808	1 872	137.6	130.0	117.0
6		3/4				2 106	154.9	146.3	131.6
7		5/6				2 340	172.1	162.5	146.3
8	256-QAM	3/4	8		3 744	2 808	206.5	195.0	175.5
9		5/6				3 120	229.4	216.7	195.0
10	1024-QAM	3/4	10		4 680	3 510	258.1	243.8	219.4
11		5/6				3 900	286.8	270.8	243.8
12	4096-QAM	3/4	12		5 616	4 212	309.7	292.5	263.3
13		5/6				4 680	344.1	325.0	292.5
15	BPSK-DCM	1/2	1	234	234	117	8.6	8.1	7.3
17	QPSK	2/3	2	468	936	624	45.9	43.3	39.0
19	16-QAM	2/3	4		1872	1248	91.8	86.7	78.0
20	16-QAM	5/6	4		1872	1560	114.7	108.3	97.5
23	256-QAM	2/3	8		3744	2496	183.5	173.3	156.0

Copyright © 2025 IEEE. All rights reserved.
This is an unapproved IEEE Standards Draft, subject to change.

38.5.8 UHR-MCSs for 484+242-tone MRU

The rate-dependent parameters for the 484+242-tone MRU are provided in Table 38-68 (UHR-MCSs for 484+242-tone MRU, NSS,u = 1).

Table 38-68—UHR-MCSs for 484+242-tone MRU, $N_{SS,u}$ = 1

UHR-MCS index	Modulation	R_u	$N_{BPSCS,u}$	$N_{SD,u}$	$N_{CBPS,u}$	$N_{DBPS,u}$	Data rate (Mb/s)		
							0.8 µs GI	1.6 µs GI	3.2 µs GI
0	BPSK	1/2	1	702	702	351	25.8	24.4	21.9
1	QPSK	1/2	2		1 404	702	51.6	48.8	43.9
2		3/4				1 053	77.4	73.1	65.8
3	16-QAM	1/2	4		2 808	1 404	103.2	97.5	87.8
4		3/4				2 106	154.9	146.3	131.6
5	64-QAM	2/3	6		4 212	2 808	206.5	195.0	175.5
6		3/4				3 159	232.3	219.4	197.4
7		5/6				3 510	258.1	243.8	219.4
8	256-QAM	3/4	8		5 616	4 212	309.7	292.5	263.3
9		5/6				4 680	344.1	325.0	292.5
10	1024-QAM	3/4	10		7 020	5 265	387.1	365.6	329.1
11		5/6				5 850	430.1	406.3	365.6
12	4096-QAM	3/4	12		8 424	6 318	464.6	438.8	394.9
13		5/6				7 020	516.2	487.5	438.8
15	BPSK-DCM	1/2	1	351	351	175	12.9	12.2	10.9
17	QPSK	2/3	2	702	1404	936	68.8	65.0	58.5
19	16-QAM	2/3	4		2808	1872	137.6	130.0	117.0
20	16-QAM	5/6	4		2808	2340	172.1	162.5	146.3
23	256-QAM	2/3	8		5616	3744	275.3	260.0	234.0

Copyright © 2025 IEEE. All rights reserved.
This is an unapproved IEEE Standards Draft, subject to change.

38.5.9 UHR-MCSs for 996-tone RU

The rate-dependent parameters for the 996-tone RU are provided in Table 38-69 (UHR-MCSs for 996-tone RU, NSS,u = 1).

Table 38-69—UHR-MCSs for 996-tone RU, $N_{SS,u}$ = 1

UHR-MCS index	Modulation	R_u	$N_{BPSCS,u}$	$N_{SD,u}$	$N_{CBPS,u}$	$N_{DBPS,u}$	Data rate (Mb/s)		
							0.8 µs GI	1.6 µs GI	3.2 µs GI
0	BPSK	1/2	1	980	980	490	36.0	34.0	30.6
1	QPSK	1/2	2		1 960	980	72.1	68.1	61.3
2		3/4				1 470	108.1	102.1	91.9
3	16-QAM	1/2	4		3 920	1 960	144.1	136.1	122.5
4		3/4				2 940	216.2	204.2	183.8
5	64-QAM	2/3	6		5 880	3 920	288.2	272.2	245.0
6		3/4				4 410	324.3	306.3	275.6
7		5/6				4 900	360.3	340.3	306.3
8	256-QAM	3/4	8		7 840	5 880	432.4	408.3	367.5
9		5/6				6 533	480.4	453.7	408.3
10	1024-QAM	3/4	10		9 800	7 350	540.4	510.4	459.4
11		5/6				8 166	600.4	567.1	510.4
12	4096-QAM	3/4	12		11 760	8 820	648.5	612.5	551.3
13		5/6				9 800	720.6	680.6	612.5
15	BPSK-DCM	1/2	1	490	490	245	18.0	17.0	15.3
17	QPSK	2/3	2	980	1960	1306	96.0	90.7	81.6
19	16-QAM	2/3	4		3920	2613	192.1	181.5	163.3
20	16-QAM	5/6	4		3920	3266	240.1	226.8	204.1
23	256-QAM	2/3	8		7840	5226	384.3	362.9	326.6

Copyright © 2025 IEEE. All rights reserved.
This is an unapproved IEEE Standards Draft, subject to change.

38.5.10 UHR-MCSs for 996+484-tone MRU

The rate-dependent parameters for the 996+484-tone MRU are provided in Table 38-70 (UHR-MCSs for 996+484-tone MRU, NSS,u = 1).

Table 38-70—UHR-MCSs for 996+484-tone MRU, $N_{SS,u}$ = 1

UHR-MCS index	Modulation	R_u	$N_{BPSCS,u}$	$N_{SD,u}$	$N_{CBPS,u}$	$N_{DBPS,u}$	Data rate (Mb/s)		
							0.8 µs GI	1.6 µs GI	3.2 µs GI
0	BPSK	1/2	1	1 448	1 448	724	53.2	50.3	45.3
1	QPSK	1/2	2		2 896	1 448	106.5	100.6	90.5
2		3/4				2 172	159.7	150.8	135.8
3	16-QAM	1/2	4		5 792	2 896	212.9	201.1	181.0
4		3/4				4 344	319.4	301.7	271.5
5	64-QAM	2/3	6		8 688	5 792	425.9	402.2	362.0
6		3/4				6 516	479.1	452.5	407.3
7		5/6				7 240	532.4	502.8	452.5
8	256-QAM	3/4	8		11 584	8 688	638.8	603.3	543.0
9		5/6				9 653	709.8	670.3	603.3
10	1024-QAM	3/4	10		14 480	10 860	798.5	754.2	678.8
11		5/6				12 066	887.2	837.9	754.1
12	4096-QAM	3/4	12		17 376	13 032	958.2	905.0	814.5
13		5/6				14 480	1 064.7	1 005.6	905.0
15	BPSK-DCM	1/2	1	724	724	362	26.2	25.1	22.6
17	QPSK	2/3	2	1 448	2896	1930	141.9	134.0	120.6
19	16-QAM	2/3	4		5792	3861	283.9	268.1	241.3
20	16-QAM	5/6	4		5792	4826	354.9	335.1	301.6
23	256-QAM	2/3	8		11584	7722	567.8	536.3	482.6

Copyright © 2025 IEEE. All rights reserved.
This is an unapproved IEEE Standards Draft, subject to change.

38.5.11 UHR-MCSs for 996+484+242-tone MRU

The rate-dependent parameters for the 996+484+242-tone MRU are provided in Table 38-71 (UHR-MCSs for 996+484+242-tone MRU, NSS,u = 1).

Table 38-71—UHR-MCSs for 996+484+242-tone MRU, $N_{SS,u}$ = 1

UHR-MCS index	Modulation	R_u	$N_{BPSCS,u}$	$N_{SD,u}$	$N_{CBPS,u}$	$N_{DBPS,u}$	Data rate (Mb/s)		
							0.8 µs GI	1.6 µs GI	3.2 µs GI
0	BPSK	1/2	1	1 682	1 682	841	61.8	58.4	52.6
1	QPSK	1/2	2		3 364	1 682	123.7	116.8	105.1
2		3/4				2 523	185.5	175.2	157.7
3	16-QAM	1/2	4		6 728	3 364	247.4	233.6	210.3
4		3/4				5 046	371.0	350.4	315.4
5	64-QAM	2/3	6		10 092	6 728	494.7	467.2	420.5
6		3/4				7 569	556.5	525.6	473.1
7		5/6				8 410	618.4	584.0	525.6
8	256-QAM	3/4	8		13 456	10 092	742.1	700.8	630.8
9		5/6				11 213	824.5	778.7	700.8
10	1024-QAM	3/4	10		16 820	12 615	927.6	876.0	788.4
11		5/6				14 016	1 030.6	973.3	876.0
12	4096-QAM	3/4	12		20 184	15 138	1 113.1	1 051.3	946.1
13		5/6				16 820	1 236.8	1 168.1	1 051.3
15	BPSK-DCM	1/2	1	841	841	420	30.9	29.2	26.3
17	QPSK	2/3	2	1 682	3364	2242	164.9	155.7	140.1
19	16-QAM	2/3	4		6728	4485	329.8	311.5	280.3
20	16-QAM	5/6	4		6728	5606	412.2	389.3	350.4
23	256-QAM	2/3	8		13456	8970	659.6	622.9	560.6

Copyright © 2025 IEEE. All rights reserved.
This is an unapproved IEEE Standards Draft, subject to change.

38.5.12 UHR-MCSs for 2×996-tone RU

The rate-dependent parameters for the 2×996-tone RU are provided in Table 38-72 (UHR-MCSs for 2×996-tone RU, NSS,u = 1).

Table 38-72—UHR-MCSs for 2×996-tone RU, $N_{SS,u}$ = 1

UHR-MCS index	Modulation	R_u	$N_{BPSCS,u}$	$N_{SD,u}$	$N_{CBPS,u}$	$N_{DBPS,u}$	Data rate (Mb/s)		
							0.8 µs GI	1.6 µs GI	3.2 µs GI
0	BPSK	1/2	1	1 960	1 960	980	72.1	68.1	61.3
1	QPSK	1/2	2		3 920	1 960	144.1	136.1	122.5
2		3/4				2 940	216.2	204.2	183.8
3	16-QAM	1/2	4		7 840	3 920	288.2	272.2	245.0
4		3/4				5 880	432.4	408.3	367.5
5	64-QAM	2/3	6		11 760	7 840	576.5	544.4	490.0
6		3/4				8 820	648.5	612.5	551.3
7		5/6				9 800	720.6	680.6	612.5
8	256-QAM	3/4	8		15 680	11 760	864.7	816.7	735.0
9		5/6				13 066	960.7	907.4	816.6
10	1024-QAM	3/4	10		19 600	14 700	1 080.9	1 020.8	918.8
11		5/6				16 333	1 201.0	1 134.2	1 020.8
12	4096-QAM	3/4	12		23 520	17 640	1 297.1	1 225.0	1 102.5
13		5/6				19 600	1 441.2	1 361.1	1 225.0
15	BPSK-DCM	1/2	1	980	980	490	36.0	34.0	30.6
17	QPSK	2/3	2	1 960	3920	2613	192.1	181.5	163.3
19	16-QAM	2/3	4		7840	5226	384.3	362.9	326.6
20	16-QAM	5/6	4		7840	6533	480.4	453.7	408.3
23	256-QAM	2/3	8		15680	10453	768.6	725.9	653.3

Copyright © 2025 IEEE. All rights reserved.
This is an unapproved IEEE Standards Draft, subject to change.

38.5.13 UHR-MCSs for 2×996+484-tone MRU

The rate-dependent parameters for the 2×996+484-tone MRU are provided in Table 38-73 (UHR-MCSs for 2×996+484-tone MRU, NSS,u = 1).

Table 38-73—UHR-MCSs for 2×996+484-tone MRU, $N_{SS,u}$ = 1

UHR-MCS index	Modulation	R_u	$N_{BPSCS,u}$	$N_{SD,u}$	$N_{CBPS,u}$	$N_{DBPS,u}$	Data rate (Mb/s)		
							0.8 µs GI	1.6 µs GI	3.2 µs GI
0	BPSK	1/2	1	2 428	2 428	1 214	89.3	84.3	75.9
1	QPSK	1/2	2		4 856	2 428	178.5	168.6	151.8
2		3/4				3 642	267.8	252.9	227.6
3	16-QAM	1/2	4		9 712	4 856	357.1	337.2	303.5
4		3/4				7 284	535.6	505.8	455.3
5	64-QAM	2/3	6		14 568	9 712	714.1	674.4	607.0
6		3/4				10 926	803.4	758.8	682.9
7		5/6				12 140	892.6	843.1	758.8
8	256-QAM	3/4	8		19 424	14 568	1 071.2	1 011.7	910.5
9		5/6				16 186	1 190.1	1 124.0	1 011.6
10	1024-QAM	3/4	10		24 280	18 210	1 339.0	1 264.6	1 138.1
11		5/6				20 233	1 487.7	1 405.1	1 264.6
12	4096-QAM	3/4	12		29 136	21 852	1 606.8	1 517.5	1 365.8
13		5/6				24 280	1 785.3	1 686.1	1 517.5
15	BPSK-DCM	Not valid							
17	QPSK	2/3	2	2 428	4856	3237	238.0	224.8	202.3
19	16-QAM	2/3	4		9712	6474	476.0	449.6	404.6
20	16-QAM	5/6	4		9712	8093	595.1	562.0	505.8
23	256-QAM	2/3	8		19424	12949	952.1	899.2	809.3

Copyright © 2025 IEEE. All rights reserved.
This is an unapproved IEEE Standards Draft, subject to change.

38.5.14 UHR-MCSs for 3×996-tone MRU

The rate-dependent parameters for the 3×996-tone MRU are provided in Table 38-74 (UHR-MCSs for 3×996-tone MRU, NSS,u = 1).

Table 38-74—UHR-MCSs for 3×996-tone MRU, $N_{SS,u}$ = 1

UHR-MCS index	Modulation	R_u	$N_{BPSCS,u}$	$N_{SD,u}$	$N_{CBPS,u}$	$N_{DBPS,u}$	Data rate (Mb/s)		
							0.8 µs GI	1.6 µs GI	3.2 µs GI
0	BPSK	1/2	1	2 940	2 940	1 470	108.1	102.1	91.9
1	QPSK	1/2	2		5 880	2 940	216.2	204.2	183.8
2		3/4				4 410	324.3	306.3	275.6
3	16-QAM	1/2	4		11 760	5 880	432.4	408.3	367.5
4		3/4				8 820	648.5	612.5	551.3
5	64-QAM	2/3	6		17 640	11 760	864.7	816.7	735.0
6		3/4				13 230	972.8	918.8	826.9
7		5/6				14 700	1 080.9	1 020.8	918.8
8	256-QAM	3/4	8		23 520	17 640	1 297.1	1 225.0	1 102.5
9		5/6				19 600	1 441.2	1 361.1	1 225.0
10	1024-QAM	3/4	10		29 400	22 050	1 621.3	1 531.3	1 378.1
11		5/6				24 500	1 801.5	1 701.4	1 531.3
12	4096-QAM	3/4	12		35 280	26 460	1 945.6	1 837.5	1 653.8
13		5/6				29 400	2 161.8	2 041.7	1 837.5
15	BPSK-DCM	1/2	1	1 470	1 470	735	54.0	51.0	45.9
17	QPSK	2/3	2	2 940	5880	3920	288.2	272.2	245.0
19	16-QAM	2/3	4		11760	7840	576.5	544.4	490.0
20	16-QAM	5/6	4		11760	9800	720.6	680.6	612.5
23	256-QAM	2/3	8		23520	15680	1152.9	1088.9	980.0

Copyright © 2025 IEEE. All rights reserved.
This is an unapproved IEEE Standards Draft, subject to change.

38.5.15 UHR-MCSs for 3×996+484-tone MRU

The rate-dependent parameters for the 3×996+484-tone MRU are provided in Table 38-75 (UHR-MCSs for 3×996+484-tone MRU, NSS,u = 1).

Table 38-75—UHR-MCSs for 3×996+484-tone MRU, $N_{SS,u}$ = 1

UHR-MCS index	Modulation	R_u	$N_{BPSCS,u}$	$N_{SD,u}$	$N_{CBPS,u}$	$N_{DBPS,u}$	Data rate (Mb/s)		
							0.8 µs GI	1.6 µs GI	3.2 µs GI
0	BPSK	1/2	1	3 408	3 408	1 704	125.3	118.3	106.5
1	QPSK	1/2	2		6 816	3 408	250.6	236.7	213.0
2		3/4				5 112	375.9	355.0	319.5
3	16-QAM	1/2	4		13 632	6 816	501.2	473.3	426.0
4		3/4				10 224	751.8	710.0	639.0
5	64-QAM	2/3	6		20 448	13 632	1 002.4	946.7	852.0
6		3/4				15 336	1 127.6	1 065.0	958.5
7		5/6				17 040	1 252.9	1 183.3	1 065.0
8	256-QAM	3/4	8		27 264	20 448	1 503.5	1 420.0	1 278.0
9		5/6				22 720	1 670.6	1 577.8	1 420.0
10	1024-QAM	3/4	10		34 080	25 560	1 879.4	1 775.0	1 597.5
11		5/6				28 400	2 088.2	1 972.2	1 775.0
12	4096-QAM	3/4	12		40 896	30 672	2 255.3	2 130.0	1 917.0
13		5/6				34 080	2 505.9	2 366.7	2 130.0
15	BPSK-DCM	1/2	Not valid						
17	QPSK	2/3	2	3 408	6816	4544	334.1	315.6	284.0
19	16-QAM	2/3	4		13632	9088	668.2	631.1	568.0
20	16-QAM	5/6	4		13632	11360	835.3	788.9	710.0
23	256-QAM	2/3	8		27264	18176	1336.5	1262.2	1136.0

Copyright © 2025 IEEE. All rights reserved.
This is an unapproved IEEE Standards Draft, subject to change.

38.5.16 UHR-MCSs for 4×996-tone RU

The rate-dependent parameters for the 4×996-tone RU are provided in Table 38-76 (UHR-MCSs for 4×996-tone RU, NSS,u = 1).

Table 38-76—UHR-MCSs for 4×996-tone RU, $N_{SS,u}$ = 1

UHR-MCS index	Modulation	R_u	$N_{BPSCS,u}$	$N_{SD,u}$	$N_{CBPS,u}$	$N_{DBPS,u}$	Data rate (Mb/s)		
							0.8 µs GI	1.6 µs GI	3.2 µs GI
0	BPSK	1/2	1	3 920	3 920	1 960	144.1	136.1	122.5
1	QPSK	1/2	2		7 840	3 920	288.2	272.2	245.0
2		3/4				5 880	432.4	408.3	367.5
3	16-QAM	1/2	4		15 680	7 840	576.5	544.4	490.0
4		3/4				11 760	864.7	816.7	735.0
5	64-QAM	2/3	6		23 520	15 680	1 152.9	1 088.9	980.0
6		3/4				17 640	1 297.1	1 225.0	1 102.5
7		5/6				19 600	1 441.2	1 361.1	1 225.0
8	256-QAM	3/4	8		31 360	23 520	1 729.4	1 633.3	1 470.0
9		5/6				26 133	1 921.5	1 814.8	1 633.3
10	1024-QAM	3/4	10		39 200	29 400	2 161.8	2 041.7	1 837.5
11		5/6				32 666	2 401.9	2 268.5	2 041.6
12	4096-QAM	3/4	12		47 040	35 280	2 594.1	2 450.0	2 205.0
13		5/6				39 200	2 882.4	2 722.2	2 450.0
15	BPSK-DCM	1/2	1	1 960	1 960	980	72.1	68.1	61.3
17	QPSK	2/3	2	3 920	7840	5226	384.3	362.9	326.6
19	16-QAM	2/3	4		15680	10453	768.6	725.9	653.3
20	16-QAM	5/6	4		15680	15680	960.7	907.4	816.6
23	256-QAM	2/3	8		31360	20906	1537.2	1451.8	1306.6

Copyright © 2025 IEEE. All rights reserved.
This is an unapproved IEEE Standards Draft, subject to change.

38.5.17 UHR-MCSs for 242-tone RU with IM enabled

The rate-dependent parameters for the 242-tone RU with IM enabled are provided in Table 38-77 (UHR-MCSs for 242-tone RU, NSS,u = 1, when IM is enabled).

Table 38-77—UHR-MCSs for 242-tone RU, $N_{SS,u}$ = 1, when IM is enabled

UHR-MCS index	Modulation	R_u	$N_{BPSCS,u}$	$N_{SD,u}$	$N_{CBPS,u}$	$N_{DBPS,u}$	Data rate (Mb/s)		
							0.8 µs GI	1.6 µs GI	3.2 µs GI
0	BPSK	1/2	1	208	208	104	7.6	7.2	6.5
1	QPSK	1/2	2		416	208	15.3	14.4	13.0
2		3/4				312	22.9	21.7	19.5
3	16-QAM	1/2	4		832	416	30.6	28.9	26.0
4		3/4				624	45.9	43.3	39.0
5	64-QAM	2/3	6		1248	832	61.2	57.8	52.0
6		3/4				936	68.8	65.0	58.5
7		5/6				1040	76.5	72.2	65.0
8	256-QAM	3/4	8		1664	1248	91.8	86.7	78.0
9		5/6				1386	101.9	96.3	86.6
10	1024-QAM	3/4	10		2080	1560	114.7	108.3	97.5
11		5/6				1733	127.4	120.3	108.3
12	4096-QAM	3/4	12		2496	1872	137.6	130.0	117.0
13		5/6				2080	152.9	144.4	130.0
17	QPSK	2/3	2		416	277	20.4	19.2	17.3
19	16-QAM	2/3	4		832	554	40.7	38.5	34.6
20	16-QAM	5/6	4		832	693	51.0	48.1	43.3
23	256-QAM	2/3	8		1664	1109	81.5	77.0	69.3

Copyright © 2025 IEEE. All rights reserved.
This is an unapproved IEEE Standards Draft, subject to change.

38.5.18 UHR-MCSs for 484-tone RU with IM enabled

The rate-dependent parameters for the 484-tone RU with IM enabled are provided in Table 38-78 (UHR-MCSs for 484-tone RU, NSS,u = 1, when IM is enabled).

Table 38-78—UHR-MCSs for 484-tone RU, $N_{SS,u}$ = 1, when IM is enabled

UHR-MCS index	Modulation	R_u	$N_{BPSCS,u}$	$N_{SD,u}$	$N_{CBPS,u}$	$N_{DBPS,u}$	Data rate (Mb/s)		
							0.8 µs GI	1.6 µs GI	3.2 µs GI
0	BPSK	1/2	1	416	416	208	15.3	14.4	13.0
1	QPSK	1/2	2		832	416	30.6	28.9	26.0
2		3/4				624	45.9	43.3	39.0
3	16-QAM	1/2	4		1664	832	61.2	57.8	52.0
4		3/4				1248	91.8	86.7	78.0
5	64-QAM	2/3	6		2496	1664	122.4	115.6	104.0
6		3/4				1872	137.6	130.0	117.0
7		5/6				2080	152.9	144.4	130.0
8	256-QAM	3/4	8		3328	2496	183.5	173.3	156.0
9		5/6				2773	203.9	192.6	173.3
10	1024-QAM	3/4	10		4160	3120	229.4	216.7	195.0
11		5/6				3466	254.9	240.7	216.6
12	4096-QAM	3/4	12		4992	3744	275.3	260.0	234.0
13		5/6				4160	305.9	288.9	260.0
17	QPSK	2/3	2		832	554	40.7	38.5	34.6
19	16-QAM	2/3	4		1664	1109	81.5	77.0	69.3
20	16-QAM	5/6	4		1664	1386	101.9	96.3	86.6
23	256-QAM	2/3	8		3328	2218	163.1	154.0	138.6

Copyright © 2025 IEEE. All rights reserved.
This is an unapproved IEEE Standards Draft, subject to change.

38.5.19 UHR-MCSs for 996-tone RU with IM enabled

The rate-dependent parameters for the 996-tone RU with IM enabled are provided in Table 38-79 (UHR-MCSs for 996-tone RU, NSS,u = 1, when IM is enabled).

Table 38-79—UHR-MCSs for 996-tone RU, $N_{SS,u}$ = 1, when IM is enabled

UHR-MCS index	Modulation	R_u	$N_{BPSCS,u}$	$N_{SD,u}$	$N_{CBPS,u}$	$N_{DBPS,u}$	Data rate (Mb/s)		
							0.8 µs GI	1.6 µs GI	3.2 µs GI
0	BPSK	1/2	1	882	882	441	32.4	30.6	27.6
1	QPSK	1/2	2		1764	882	64.9	61.3	55.1
2		3/4				1323	97.3	91.9	82.7
3	16-QAM	1/2	4		3528	1764	129.7	122.5	110.3
4		3/4				2646	194.6	183.8	165.4
5	64-QAM	2/3	6		5292	3528	259.4	245.0	220.5
6		3/4				3969	291.8	275.6	248.1
7		5/6				4410	324.3	306.3	275.6
8	256-QAM	3/4	8		7056	5292	389.1	367.5	330.8
9		5/6				5880	432.4	408.3	367.5
10	1024-QAM	3/4	10		8820	6615	486.4	459.4	413.4
11		5/6				7350	540.4	510.4	459.4
12	4096-QAM	3/4	12		10584	7938	583.7	551.3	496.1
13		5/6				8820	648.5	612.5	551.3
17	QPSK	2/3	2		1764	1176	86.5	81.7	73.5
19	16-QAM	2/3	4		3528	2352	172.9	163.3	147
20	16-QAM	5/6	4		3528	2940	216.2	204.2	183.8
23	256-QAM	2/3	8		7056	4704	345.9	326.7	294.0

Copyright © 2025 IEEE. All rights reserved.
This is an unapproved IEEE Standards Draft, subject to change.

38.5.20 UHR-MCSs for 2×996-tone RU with IM enabled

The rate-dependent parameters for the 2×996-tone RU with IM enabled are provided in Table 38-80 (UHR-MCSs for 2×996-tone RU, NSS,u = 1, when IM is enabled).

Table 38-80—UHR-MCSs for 2×996-tone RU, $N_{SS,u}$ = 1, when IM is enabled

UHR-MCS index	Modulation	R_u	$N_{BPSCS,u}$	$N_{SD,u}$	$N_{CBPS,u}$	$N_{DBPS,u}$	Data rate (Mb/s)		
							0.8 µs GI	1.6 µs GI	3.2 µs GI
0	BPSK	1/2	1	1764	1764	882	64.9	61.3	55.1
1	QPSK	1/2	2		3528	1764	129.7	122.5	110.3
2		3/4				2646	194.6	183.8	165.4
3	16-QAM	1/2	4		7056	3528	259.4	245.0	220.5
4		3/4				5292	389.1	367.5	330.8
5	64-QAM	2/3	6		10584	7056	518.8	490.0	441.0
6		3/4				7938	583.7	551.3	496.1
7		5/6				8820	648.5	612.5	551.3
8	256-QAM	3/4	8		14112	10584	778.2	735.0	661.5
9		5/6				11760	864.7	816.7	735.0
10	1024-QAM	3/4	10		17640	13230	972.8	918.8	826.9
11		5/6				14700	1080.9	1020.8	918.8
12	4096-QAM	3/4	12		21168	15876	1167.4	1102.5	992.3
13		5/6				17640	1297.1	1225.0	1102.5
17	QPSK	2/3	2		3528	2352	172.9	163.3	147.0
19	16-QAM	2/3	4		7056	4704	345.9	326.7	294.0
20	16-QAM	5/6	4		7056	5880	432.4	408.3	367.5
23	256-QAM	2/3	8		14112	9408	691.8	653.3	588.0

Copyright © 2025 IEEE. All rights reserved.
This is an unapproved IEEE Standards Draft, subject to change.

38.5.21 UHR-MCSs for 4×996-tone RU with IM enabled

The rate-dependent parameters for the 4×996-tone RU with IM enabled are provided in Table 38-81 (UHR-MCSs for 4×996-tone RU, NSS,u = 1, when IM is enabled).

Table 38-81—UHR-MCSs for 4×996-tone RU, $N_{SS,u}$ = 1, when IM is enabled

UHR-MCS index	Modulation	R_u	$N_{BPSCS,u}$	$N_{SD,u}$	$N_{CBPS,u}$	$N_{DBPS,u}$	Data rate (Mb/s)		
							0.8 µs GI	1.6 µs GI	3.2 µs GI
0	BPSK	1/2	1	3528	3528	1764	129.7	122.5	110.3
1	QPSK	1/2	2		7056	3528	259.4	245.0	220.5
2		3/4				5292	389.1	367.5	330.8
3	16-QAM	1/2	4		14112	7056	518.8	490.0	441.0
4		3/4				10584	778.2	735.0	661.5
5	64-QAM	2/3	6		21168	14112	1037.6	980.0	882.0
6		3/4				15876	1167.4	1102.5	992.3
7		5/6				17640	1297.1	1225.0	1102.5
8	256-QAM	3/4	8		28224	21168	1556.5	1470.0	1323.0
9		5/6				23520	1729.4	1633.3	1470.0
10	1024-QAM	3/4	10		35280	26460	1945.6	1837.5	1653.8
11		5/6				29400	2161.8	2041.7	1837.5
12	4096-QAM	3/4	12		42336	31752	2334.7	2205.0	1984.5
13		5/6				35280	2594.1	2450.0	2205.0
17	QPSK	2/3	2		7056	4704	345.9	326.7	294.0
19	16-QAM	2/3	4		14112	9408	691.8	653.3	588.0
20	16-QAM	5/6	4		14112	11760	864.7	816.7	735.0
23	256-QAM	2/3	8		28224	18816	1383.5	1306.7	1176.0

Copyright © 2025 IEEE. All rights reserved.
This is an unapproved IEEE Standards Draft, subject to change.

38.5.22 UHR-MCSs for UHR ELR PPDU

The rate-dependent parameters for UHR ELR PPDU MCS 0 and 1 are provided in Table 38-82 (UHR ELR PPDU with UHR-MCS0 and UHR-MCS1, NSS = 1).

Table 38-82—UHR ELR PPDU with UHR-MCS0 and UHR-MCS1, N_{SS} = 1

UHR-MCS	Modulation	R	N_{BPSCS}	N_{SD}	N_{CPBS}	N_{DPBS}	Data rate (Mb/s) 1.6 µs GI
0	BPSK	1/2	1	48	48	24	1.67
1	QPSK	1/2	2	48	96	48	3.33

38.6 Parameters for UHR-SIG MCSs

The UHR-SIG MCSs, defined in Table 38-83 (UHR-SIG MCSs), are used for the UHR-SIG field transmission in the UHR MU PPDU.

Table 38-83—UHR-SIG MCSs

Value of the UHR-SIG MCS field	UHR-MCS index	Modulation	R	N_{BPSCS}	N_{SD}	N_{CBPS}	N_{DBPS}	UHR-SIG rate (Mb/s)
0	UHR-MCS 0	BPSK	1/2	1	52	52	26	6.5
1	UHR-MCS 1	QPSK	1/2	2	52	104	52	13
2	UHR-MCS 3	16-QAM	1/2	4	52	208	104	26.0
NOTE—The parameters N_{SD}, N_{CBPS}, and N_{DBPS} are used for the UHR-SIG field transmission in each 20 MHz subchannel.								

Copyright © 2025 IEEE. All rights reserved.
This is an unapproved IEEE Standards Draft, subject to change.

Annex B

(normative)

Protocol Implementation Conformance Statement (PICS) proforma

B.4 PICS proforma—IEEE Std 802.11-<year>

B.4.3 IUT configuration

Editor's Note: It is a placeholder subclause.

Insert the following new subclause at the end of subclause B.4:

B.4.40a Ultra-high Reliability (UHR) features

B.4.40a.1 UHR MAC features

Editor's Note: It is a placeholder subclause.

B.4.40a.2 UHR PHY features

Editor's Note: It is a placeholder subclause.

Copyright © 2025 IEEE. All rights reserved.
This is an unapproved IEEE Standards Draft, subject to change.

Annex C

(normative)

ASN.1 encoding of the MAC and PHY MIB

C.3 MIB Detail

Change the comment list following the dot11smt definition (not all lines shown) as follows:

```
-- ********************************************************************
-- * Major sections
-- ********************************************************************

--  Station Management (SMT) Attributes
    --  DEFINED AS "The SMT object class provides the necessary support
    --  at the station to manage the processes in the station such that
    --  the station may work cooperatively as a part of an IEEE 802.11
    --  network."

   dot11smt OBJECT IDENTIFIER ::= { ieee802dot11 1 }
   --  dot11smt GROUPS
   --  ...
   --  dot11EBCSTrafficStreamTable                  ::= ( dot11smt 48 )
   --  dot11UHRSTAConfigTable                       ::= ( dot11smt 51 )
```

Insert the following after the dot11STACivicLocationConfig TABLE:

```
-- ********************************************************************
-- * dot11UHRStationConfig TABLE
-- ********************************************************************

dot11UHRStationConfigTable OBJECT-TYPE
   SYNTAX SEQUENCE OF Dot11UHRStationConfigEntry
   MAX-ACCESS not-accessible
   STATUS current
   DESCRIPTION
      "Station configuration attributes. In tabular form to allow for multiple
      instances on an agent."
   ::= { dot11smt 51 }
```

Change Dot11StationConfigEntry (not all lines shown) as follows:

```
-- ********************************************************************
-- * dot11StationConfig TABLE
-- ********************************************************************

Dot11StationConfigEntry ::= SEQUENCE
   {
      dot11StationID MacAddress,
      …
      dot11UHROptionImplemented                          TruthValue,
      dot11UHRStationConfigEntry                         TruthValue,

      dot11MAPCPASNActivated                             TruthValue,
      dot11AdaptiveOperationModeImplemented              TruthValue
   }
```

Insert the following:

Copyright © 2025 IEEE. All rights reserved.
This is an unapproved IEEE Standards Draft, subject to change.

```
dot11UHROptionImplemented OBJECT-TYPE
   SYNTAX TruthValue
   MAX-ACCESS read-only
   STATUS current
   DESCRIPTION
      "This is a capability variable.
      Its value is determined by device capabilities.

      This attribute indicates whether the instance of implementation is UHR-
      capable."
   ::= { dot11StationConfigEntry 239 }

dot11UHRStationConfigEntry OBJECT-TYPE
   SYNTAX Dot11UHRStationConfigEntry
   MAX-ACCESS not-accessible
   STATUS current
   DESCRIPTION
      "An entry (conceptual row) in the dot11UHRStationConfig table.

      ifIndex - Each IEEE 802.11 interface is represented by an ifEntry. Inter-
      face tables in this MIB module are indexed by ifIndex."
      INDEX { ifIndex }
   ::= { dot11UHRStationConfigTable 240 }

dot11MAPCPASNActivated OBJECT-TYPE
   SYNTAX TruthValue
   MAX-ACCESS read-write
   STATUS current
   DESCRIPTION
      "This is a control variable. It is written by an external management
      entity or the SME. Changes take effect for the next MLME-START.request
      primitive or MLME-JOIN.request primitive. This attribute indicates whether
      or not MAPC PASN authentication is enabled."
      DEFVAL {false}
::= { dot11StationConfigEntry 241 }

dot11AdaptiveOperationModeImplemented OBJECT-TYPE
   SYNTAX TruthValue
   MAX-ACCESS read-only
   STATUS current
   DESCRIPTION
      "This is a capability variable.
      Its value is determined by device capabilities.

      This attribute, when true, indicates the ability of the STA to support
      adaptive operation mode. If the attribute is false, the STA does not sup-
      port adaptive operation mode."
::= { dot11StationConfigEntry 242 }

Dot11UHRStationConfigEntry ::=
   SEQUENCE {
      dot11CoRTWTOptionImplemented                          TruthValue,
      dot11NPCAOptionImplemented                            TruthValue,
      dot11DUOOptionImplemented                             TruthValue,
      dot11UHRBSRImplemented                                TruthValue,
      dot11DSOOptionActivated                               TruthValue,
      dot11PEDCAOptionActivated                             TruthValue,
      dot11DBEOptionActivated                               TruthValue,
      dot11IFCSLocationIndicationImplemented                TruthValue,
      dot11EnhancedLongRangeTxActivated                     TruthValue,
      dot11ExtendedChannelUsageOptionImplemented            TruthValue,
      ddot11TXSPGOptionImplemented                          TruthValue,
      dot11ExtendedChannelUsageOptionImplemented            TruthValue,
```


Copyright © 2025 IEEE. All rights reserved.
This is an unapproved IEEE Standards Draft, subject to change.

```
        dot11L4SImplemented                                    TruthValue,
        dot11LLIOptionActivated                                TruthValue,
        dot11UHRMLPMOptionImplemented                          TruthValue,
        dot11UHRDPSAssistingImplemented                        TruthValue,
        dot11UHRDPSImplemented                                 TruthValue,
        dot11UHRDPSStaticHCMImplemented                        TruthValue,
        dot11UHRTRSOptionImplemented                           TruthValue(#4659)
}

dot11CoRTWTOptionImplemented OBJECT-TYPE
    SYNTAX TruthValue
    MAX-ACCESS read-only
    STATUS current
    DESCRIPTION
        "This is a capability variable.
        Its value is determined by device capabilities.

        This attribute, when true, indicates that the STA implementation is capa-
        ble of supporting Co-RTWT operation.”
    ::= { dot11UHRStationConfigEntry 1 }

dot11NPCAOptionImplemented OBJECT-TYPE
    SYNTAX TruthValue
    MAX-ACCESS read-only
    STATUS current
    DESCRIPTION
        "This is a capability variable.
        Its value is determined by device capabilities.

        This attribute, when true, that the STA implementation is capable of sup-
        porting NPCA operation.”
    ::= { dot11UHRStationConfigEntry 2 }

dot11DUOOptionImplemented OBJECT-TYPE
    SYNTAX TruthValue
    MAX-ACCESS read-only
    STATUS current
    DESCRIPTION
        "This is a capability variable.
        Its value is determined by device capabilities.

        This attribute, when true, indicates that the STA implementation is capa-
        ble of supporting DUO operation."
    ::= { dot11UHRStationConfigEntry 3 }

dot11UHRBSRimplemented OBJECT-TYPE
    SYNTAX TruthValue
    MAX-ACCESS read-only
    STATUS current
    DESCRIPTION
        "This is a capability variable.
        Its value is determined by device capabilities.

        This attribute, when true, indicates the ability of the STA to support
        enhanced BSR operation.If the attribute is false, the STA does not support
        enhanced BSR operation.”
    ::= { dot11UHRStationConfigEntry 4 }

dot11UHREOTSPImplemented OBJECT-TYPE
    SYNTAX TruthValue
    MAX-ACCESS read-only
    STATUS current
    DESCRIPTION
        "This is a capability variable.
```

Copyright © 2025 IEEE. All rights reserved.
This is an unapproved IEEE Standards Draft, subject to change.

```
        Its value is determined by device capabilities.

        This attribute, when true, indicates that the STA implementation supports
        EOTSP indication during TWT SPs. If the attribute is false, it indicates
        that the STA implementation does not support EOTSP indication during TWT
        SPs”
    ::= { dot11UHRStationConfigEntry 5 }

dot111DSOOptionActivated OBJECT-TYPE
    SYNTAX TruthValue
    MAX-ACCESS read-write
    STATUS current
    DESCRIPTION
        "This is a control variable.
        It is written by an external management entity or the SME.
        Changes take effect as soon as practical in the implementation.
        This attribute, when true, indicates that the station supports DSO opera-
        tion.”
    ::= { dot11UHRStationConfigEntry 6 }

dot11PEDCAOptionActivated OBJECT-TYPE
    SYNTAX TruthValue
    MAX-ACCESS read-write
    STATUS current
    DESCRIPTION
        "This is a control variable
        It is written by an external management entity or the SME.
        Changes take effect as soon as practical in the implementation.
        This attribute, when true, indicates that the station supports P-EDCA. If
        false, then the station does not support P-EDCA”
    ::= { dot11UHRStationConfigEntry 7 }

dot11PEDCARetryThreshold OBJECT-TYPE
    SYNTAX Unsigned32 (1..65535)
    MAX-ACCESS read-write
    STATUS current
    DESCRIPTION
        "This is a control variable.
        It is written by an external management entity.
        Changes take effect as soon as practical in the implementation.
        This attribute indicates the maximum number of transmission attempts of a
        frame that are made before a condition to initiate P-EDCA contention is
        indicated."
        DEFVAL { 2 }
    ::= { dot11UHROperationEntry 8 }

dot11PEDCAConsecutiveAttempt OBJECT-TYPE
    SYNTAX Unsigned32 (1..65535)
    MAX-ACCESS read-write
    STATUS current
    DESCRIPTION
        "This is a control variable.
        It is written by an external management entity.
        Changes take effect as soon as practical in the implementation.
        This attribute indicates the maximum number of allowed consecutive P-EDCA
        contention attempts"
        DEFVAL { 1 }
    ::= { dot11UHROperationEntry 9 }

dot11DBEOptionActivated OBJECT-TYPE
    SYNTAX TruthValue
    MAX-ACCESS read-only
    STATUS current
    DESCRIPTION
```


Copyright © 2025 IEEE. All rights reserved.
This is an unapproved IEEE Standards Draft, subject to change.

```
        "This is a control variable.
        It is written by an external management entity or the SME. Changes take
        effect as soon as practical in the implementation.
        This attribute, when true, indicates that the station supports DBE opera-
        tion. If this attribute is false, it indicates that the station does not
        support DBE operation."
::= { dot11UHRStationConfigEntry 10 }

dot11IFCSLocationIndicationImplemented OBJECT-TYPE
   SYNTAX TruthValue
   MAX-ACCESS read-only
   STATUS current
   DESCRIPTION
        "This is a capability variable.
        Its value is determined by device capabilities.
        This attribute, when true, indicates the ability of the STA to include the
        IFCS Location Indication field in Trigger frames that are sent as ICFs. If
        the attribute is false, the STA does not support including the IFCS Loca-
        tion Indication field."
::= { dot11StationConfigEntry 11 }

dot11EnhancedLongRangeTxActivated OBJECT-TYPE
   SYNTAX TruthValue
   MAX-ACCESS read-write
   STATUS current
   DESCRIPTION
        "This is a control variable.
        It is written by an external management entity.
        Changes take effect as soon as practical in the implementation.

        This attribute, when true, indicates that the ability of the STA to trans-
        mit ELR PPDUs is enabled. If the attribute is false, the STA does not
        transmit ELR PPDUs."
::= { dot11StationConfigEntry 12 }

dot11TXSPGOptionImplemented  OBJECT-TYPE
   SYNTAX TruthValue
   MAX-ACCESS read-only
   STATUS current
   DESCRIPTION
        "This is a capability control variable.
        It is written by an external management entity or the SME. Changes take
        effect as soon as practical in the implementation.
        Its value is determined by device capabilities.

        This attribute, when true, indicates that the STA implementation is capa-
        ble of supporting TXSPG operation. If this attribute is false, it indi-
        cates that the STA does not support TXSPG operation."
::= { dot11UHRStationConfigEntry 13 }

dot11ExtendedChannelUsageOptionImplemented  OBJECT-TYPE
   SYNTAX TruthValue
   MAX-ACCESS read-only
   STATUS current
   DESCRIPTION
        "This is a capability control variable.
        It is written by an external management entity or the SME. Changes take
        effect as soon as practical in the implementation.
        Its value is determined by device capabilities.

        This attribute, when true, indicates that the STA implementation is capa-
        ble of supporting extended channel usage. If this attribute is false, it
        indicates that the STA does not support extended channel usage operation."
::= { dot11UHRStationConfigEntry 14 }
```

Copyright © 2025 IEEE. All rights reserved.
This is an unapproved IEEE Standards Draft, subject to change.

```
dot11L4SImplemented OBJECT-TYPE
   SYNTAX TruthValue
   MAX-ACCESS read-only
   STATUS current
   DESCRIPTION
      "This is a capability variable.
      Its value is determined by device capabilities.

      This attribute, when true, indicates that the AP supports L4S capability.
      If this attribute is false, it indicates that the AP does not support L4S
      capability."
::= { dot11UHRStationConfigEntry 15 }

dot11LLIOptionActivated OBJECT-TYPE
   SYNTAX TruthValue
   MAX-ACCESS read-only
   STATUS current
   DESCRIPTION
      "This is a capability variable.
      Its value is determined by device capabilities.

      This attribute, when true, indicates that the station implementation is
      capable of supporting LLI mode. The capability is disabled, otherwise"
::= { dot11UHRStationConfigEntry 16 }

dot11UHRMLPMOptionImplemented OBJECT-TYPE
   SYNTAX TruthValue
   MAX-ACCESS read-only
   STATUS current
   DESCRIPTION
      "This is a capability variable.
      Its value is determined by device capabilities.
      This attribute, when true, indicates that the STA implementation is affil-
      iated with an MLD that supports
      MLPM operation (see 37.17.3 (Multi-link power management))."
::= { dot11UHRStationConfigEntry 17 }

dot11UpdateIndicationInPVBInterval OBJECT-TYPE
   SYNTAX Unsigned32 (10..31)
   MAX-ACCESS read-write
   STATUS current
   DESCRIPTION
      "This is a control variable.
      It is written by an external management entity.
      This attribute specifies the duration for which the AP includes the Crit-
      icalUpdates Indicator field within the Partial Virtual Bitmap field of the
      TIM element after a critical update has taken effect.
"
DEFVAL { 20 }
::= { dot11UHRStationConfigEntry 18 }

dot11UHRParamUpdateAdvNotificationInterval OBJECT-TYPE
   SYNTAX Unsigned32 (2..5)
   MAX-ACCESS read-write
   STATUS current
   DESCRIPTION
      "This is a control variable.
      It is written by an external management entity.
      This attribute specifies the time interval prior to a scheduled update to
      an AP's operating mode(s) or parameters(#9939) at which the AP begins
      announcing the forthcoming update.
"
DEFVAL { 5 }
```


Copyright © 2025 IEEE. All rights reserved.
This is an unapproved IEEE Standards Draft, subject to change.

```
::= { dot11UHRStationConfigEntry 19 }

dot11UHRParamUpdatePostNotificationInterval OBJECT-TYPE
   SYNTAX Unsigned32 (2..5)
   MAX-ACCESS read-write
   STATUS current
   DESCRIPTION
      "This is a control variable.
      It is written by an external management entity.
      This attribute specifies the time interval after a scheduled update to an
      AP's operating mode(s) or param-eters until which the AP announces the
      completed update..
"
DEFVAL { 5 }
::= { dot11UHRStationConfigEntry 20 }

dot11UHRDPSAssistingImplemented OBJECT-TYPE
   SYNTAX TruthValue
   MAX-ACCESS read-only
   STATUS current
   DESCRIPTION
      "This is a capability variable.
      Its value is determined by device capabilities.

      This attribute, when true, indicates that the STA implementation is capa-
      ble of acting as a DPS assisting STA."
   ::= { dot11UHRStationConfigEntry 21 }

dot11UHRDPSImplemented OBJECT-TYPE
   SYNTAX TruthValue
   MAX-ACCESS read-only
   STATUS current
   DESCRIPTION
      "This is a capability variable.
      Its value is determined by device capabilities.

      This attribute, when true, indicates that the STA implementation is capa-
      ble of acting as a DPS STA."
   ::= { dot11UHRStationConfigEntry 22 }

dot11UHRDPSStaticHCMImplemented OBJECT-TYPE
   SYNTAX TruthValue
   MAX-ACCESS read-only
   STATUS current
   DESCRIPTION
      "This is a capability variable.
      Its value is determined by device capabilities.

      This attribute, when true, indicates that the STA implementation is capa-
      ble of maintaining the HC mode from one Beacon frame till the next TBTT."
   ::= { dot11UHRStationConfigEntry 23 }

(#4659)dot11UHRTRSOptionImplemented OBJECT-TYPE
   SYNTAX TruthValue
   MAX-ACCESS read-only
   STATUS current
   DESCRIPTION
      "This is a capability variable.
      Its value is determined by STA capabilities.

      This attribute, when true, indicates that the station implementation is
      capable of receiving frames with a TRS Control field that solicits UHR TB
      PPDU. The capability is disabled otherwise."
::= { dot11UHRStationConfigEntry 24 }
```

Copyright © 2025 IEEE. All rights reserved.
This is an unapproved IEEE Standards Draft, subject to change.

```
}

-- ***********************************************************************
-- * End of dot11UHRStationConfig TABLE
-- ***********************************************************************
```


Copyright © 2025 IEEE. All rights reserved.
This is an unapproved IEEE Standards Draft, subject to change.