पेटेंट कार्यालय
शासकीय जर्नल

OFFICIAL JOURNAL
OF
THE PATENT OFFICE

निर्गमन सं. 03/2017	शुक्रवार	दिनांक: 20/01/2017
ISSUE NO. 03/2017	FRIDAY	DATE: 20/01/2017

पेटेंट कार्यालय का एक प्रकाशन

PUBLICATION OF THE PATENT OFFICE

INTRODUCTION

In view of the recent amendment made in the Patents Act, 1970 by the Patents (Amendment) Act, 2005 effective from 01st January 2005, the Official Journal of The Patent Office is required to be published under the Statute. This Journal is being published on weekly basis on every Friday covering the various proceedings on Patents as required according to the provision of Section 145 of the Patents Act 1970. All the enquiries on this Official Journal and other information as required by the public should be addressed to the Controller General of Patents, Designs & Trade Marks. Suggestions and comments are requested from all quarters so that the content can be enriched.

(Om Prakash Gupta)
CONTROLLER GENERAL OF PATENTS, DESIGNS & TRADE MARKS

20th JANUARY, 2017

CONTENTS

SUBJECT		*PAGE NUMBER*
JURISDICTION	:	**1421 – 1422**
SPECIAL NOTICE	:	**1423 – 1424**
EARLY PUBLICATION (DELHI)	:	**1425 – 1431**
EARLY PUBLICATION (MUMBAI)	:	**1432 – 1455**
EARLY PUBLICATION (CHENNAI)	:	**1456 – 1460**
PUBLICATION AFTER 18 MONTHS (DELHI)	:	**1461 – 1811**
PUBLICATION AFTER 18 MONTHS (MUMBAI)	:	**1812 – 1927**
PUBLICATION AFTER 18 MONTHS (CHENNAI)	:	**1928 – 2034**
PUBLICATION AFTER 18 MONTHS (KOLKATA)	:	**2035 – 2045**
APPLICATION FOR RESTORATION OF LAPSED PATENT U/S 60 : PUBLICATION U/S 61(1) RULE 84(3)		**2046**
PUBLICATION UNDER SECTION 43(2) IN RESPECT OF THE GRANT (MUMBAI)	:	**2047**
PUBLICATION UNDER SECTION 43(2) IN RESPECT OF THE GRANT (CHENNAI)	:	**2048 – 2054**
PUBLICATION UNDER SECTION 43(2) IN RESPECT OF THE GRANT (KOLKATA)	:	**2055 – 2058**
INTRODUCTION TO DESIGN PUBLICATION	:	**2059**
THE DESIGNS ACT, 2000 SECTION 30 DESIGN ASSIGNMENT	:	**2060**
REGISTRATION OF DESIGNS	:	**2061 - 2111**

THE PATENT OFFICE

KOLKATA, 20/01/2017

Address of the Patent Offices/Jurisdictions

The following are addresses of all the Patent Offices located at different places having their Territorial Jurisdiction on a Zonal basis as shown below:-

1	Office of the Controller General of Patents, Designs & Trade Marks, Boudhik Sampada Bhavan, Near Antop Hill Post Office,S.M.Road,Antop Hill, Mumbai – 400 037 Phone: (91)(22) 24123311, Fax : (91)(22) 24123322 E-mail: cgpdtm@nic.in	4	The Patent Office, Government of India, Intellectual Property Rights Building, G.S.T. Road, Guindy, Chennai – 600 032. Phone: (91)(44) 2250 2081-84 Fax : (91)(44) 2250 2066 E-mail: chennai-patent@nic.in ❖ The States of Andhra Pradesh, Telangana, Karnataka, Kerala, Tamil Nadu and the Union Territories of Puducherry and Lakshadweep.
2	The Patent Office, Government of India, Boudhik Sampada Bhavan, Near Antop Hill Post Office,S.M.Road,Antop Hill, Mumbai – 400 037 Phone: (91)(22) 24137701 Fax: (91)(22) 24130387 E-mail: mumbai-patent@nic.in ❖ The States of Gujarat, Maharashtra, Madhya Pradesh, Goa and Chhattisgarh and the Union Territories of Daman and Diu & Dadra and Nagar Haveli	5	The Patent Office (Head Office), Government of India, Boudhik Sampada Bhavan, CP-2, Sector –V, Salt Lake City, Kolkata- 700 091 Phone: (91)(33) 2367 1943/44/45/46/87 Fax: (91)(33) 2367 1988 E-Mail: kolkata-patent@nic.in ❖ Rest of India
3	The Patent Office, Government of India, Boudhik Sampada Bhavan, Plot No. 32., Sector-14, Dwarka, New Delhi – 110075 Phone: (91)(11) 25300200 & 28032253 Fax: (91)(11) 28034301 & 28034302 E.mail: delhi-patent@nic.in ❖ The States of Haryana, Himachal Pradesh, Jammu and Kashmir, Punjab, Rajasthan, Uttar Pradesh, Uttaranchal, Delhi and the Union Territory of Chandigarh.		

Website: www.ipindia.nic.in

www.patentoffice.nic.in

All applications, notices, statements or other documents or any fees required by the Patents Act, 1970 and The Patents (Amendment) Act, 2005 or by the Patents (Amendment) Rules, 2006 will be received only at the appropriate offices of the Patent Office.

Fees: The Fees may either be paid in cash or may be sent by Bank Draft or Cheques payable to the Controller of Patents drawn on a scheduled Bank at the place where the appropriate office is situated.

पेटेंट कार्यालय

कोलकाता, दिनांक 20/01/2017

• कार्यालयों के क्षेत्राधिकार के पते

विभिन्न जगहों पर स्थित पेटेंट कार्यालय के पते आंचलिक आधार पर दर्शित उनके प्रादेशिक अधिकार क्षेत्र के साथ नीचे दिए गए है:-

1	कार्यालय : महानियंत्रक, एकस्व, अभिकल्प तथा व्यापार चिहन, एंटोप हिल डाकघर के समीप, एस. एम. रोड, एंटोप हिल, मुम्बई- 400 037, भारत, फोन: (91) (22) 24123311 फ़ैक्स: (91) (22) 24123322 ई. मेल: cgpdtm@nic.in	4	पेटेंट कार्यालय, भारत सरकार इंटेलेक्चुअल प्रॉपर्टी राइट्स बिल्डिंग, इंडस्ट्रियल इस्टेट एसआईडीसीओ आरएमडी गोडाउन एरिया एडजसेन्ट टु ईगल फ्लास्क, जी. एस. टी. रोड, गायन्डी चेन्नई - 600 032. फोन: (91)(44) 2250 2081-84 फ़ैक्स: (91)(44) 2250-2066 ई. मेल: chennai-patent@nic.in ❖ आन्ध्र प्रदेश, तेलंगाना, कर्नाटक, केरल, तमिलनाडु तथा पुडुचेरी राज्य क्षेत्र एवं संघ शासित क्षेत्र, लक्षदीप
2	पेटेंट कार्यालय, भारत सरकार बौद्धिक संपदा भवन, एंटोप हिल डाकघर के समीप, एस. एम. रोड, एंटोप हिल, मुम्बई- 400 037, फोन: (91) (22) 24137701 फ़ैक्स: (91) (22) 24130387 ई. मेल: Mumbai-patent@nic.in ❖ गुजरात, महाराष्ट्र, मध्य प्रदेश, गोवा तथा छत्तीसगढ़ राज्य क्षेत्र एवं संघ शासित क्षेत्र, दमन तथा दीव, दादर और नगर हवेली•	5	पेटेंट कार्यालय, भारत सरकार कोलकाता, (प्रधान कार्यालय) बौद्धिक संपदा भवन, सीपी-2, सेक्टर- V, साल्ट लेक सिटी, कोलकाता-700 091, भारत. फोन: (91)(33) 2367 1943/44/45/46/87 फ़ैक्स:/Fax: (91)(33) 2367 1988 ई. मेल: kolkata-patent@nic.in ❖ भारत का अवशेष क्षेत्र
3	पेटेंट कार्यालय, भारत सरकार बौद्धिक संपदा भवन, प्लॉट सं. 32, सेक्टर- 14, द्वारका, नई दिल्ली- 110 075. फोन: (91)(11) 25300200, 28032253 फ़ैक्स: (91)(11) 28034301, 28034302 ई. मेल: delhi-patent@nic.in हरियाणा, हिमाचल प्रदेश, जम्मू तथा कश्मीर, पंजाब,राजस्थान, उत्तर प्रदेश, दिल्ली तथा उत्तरांचल राज्य क्षेत्रों, एवं संघ शासित क्षेत्र चंडीगढ़		

वेबसाइट: http://www.ipindia.nic.in

www.patentoffice.nic.in

पेटेंट अधिनियम, 1970 तथा पेटेंट (संशोधन) अधिनियम, 2005 अथवा पेटेंट (संशोधन) नियम, 2006 द्वारा वांछित सभी आवेदन, सूचनाए, विवरण या अन्य दस्तावेज़ या कोई शुल्क पेटेंट कार्यालय के केवल उपयुक्त कार्यालय में स्वीकृत होंगे।

शुल्क: शुल्क या तो नगद रूप में या Controller of Patents के नाम में देय बैंक ड्राफ्ट या चेक के द्वारा भेजी जा सकती है जो उसी स्थान के किसी अनुसूचित बैंक में प्रदत्त हो जहाँ उपयुक्त कार्यालय स्थित है ।

SPECIAL NOTICE

18 Months publication as required under Section 11A of the Patents Act, 1970 as amended by the Patents (Amendment) Act, 2005.

Notice is hereby given that any person at any time before the grant of Patent may give representation by way of opposition to the Controller of Patents at appropriate office on the ground and in a manner specified under section 25(1) of the Patents (Amendment) Act, 2005 read with Rule 55 of the Patents (Amendment) Rules, 2006.

Notice is also given that if any interested person requests for copies of the complete specification, drawing and abstract of any application already published, the photocopy of the same can be supplied by the Patent Office as per the jurisdiction on payment of prescribed fees of Rs.8/- per page. If any further details are required to be obtained, the same can be provided by the respective Patent Offices on request.

(Om Prakash Gupta)
CONTROLLER GENERAL OF PATENTS, DESIGNS & TRADE MARKS

SPECIAL NOTICE

Under the new provision of the Patents Act, 1970 as amended by the Patents (Amendment) Act, 2005 and Rules there under, Publication of the matter relating to Patents in the Official Gazette of India Part III, Section 2 has been discontinued and instead The Official Journal of the Patent Office is being published containing all the activities of The Patent Office such as publication of all the patent applications after 18th months , grant of patents & all other information in respect of the proceedings as required under the provisions of the Patents (Amendment) Act, 2005 and Rules thereunder on weekly basis on every **Friday**.

The Journal is uploaded in the website every Friday. So Paper form and CD-ROM form of the Journal are discontinued from 01/01/2009.

SPECIAL NOTICE

Every effort is being taken to publish all the patent applications under section 11(A) of the Patents Act. However, if duplication of publication of any application is found, then earlier date of publication will be taken for the purpose of provisional protection for applicant and Patent Office will grant Patent not before six months from the date of second publication, provided that there is there is no third party representation.

Early Publication:

The following patent applications have been published under section 11A (2) of The Patents (Amendment) Act 2005 and rule 24A of The Patents (Amendment) Rules, 2006. Any person may file representation by way of opposition to the Controller of Patents at the appropriate office against the grant of the patent in the prescribed manner under section 25(1) of the Patents (Amendment) Act 2005 read with the rule 55 of The Patents (Amendment) Rules, 2006:

(12) PATENT APPLICATION PUBLICATION

(21) Application No.201711000348 A

(19) INDIA

(22) Date of filing of Application :04/01/2017

(43) Publication Date : 20/01/2017

(54) Title of the invention : SYSTEM AND METHOD FOR CAPTURING TRANSACTION SPECIFIC STAGE-WISE LOG DATA

(51) International classification	:G06F21/60	(71)**Name of Applicant :**
(31) Priority Document No	:NA	**1)HCL Technologies Limited**
(32) Priority Date	:NA	Address of Applicant :B-39, Sector 1, Noida 201 301, Uttar Pradesh, India Uttar Pradesh India
(33) Name of priority country	:NA	
(86) International Application No	:NA	(72)**Name of Inventor :**
Filing Date	:NA	**1)MUTHIAH, Manickam**
(87) International Publication No	: NA	**2)KRISHNAMOORTHY, Sathish Kumar**
(61) Patent of Addition to Application Number	:NA	
Filing Date	:NA	
(62) Divisional to Application Number	:NA	
Filing Date	:NA	

(57) Abstract :
The present disclosure relates to system(s) and method(s) for capturing transaction specific stage-wise log data corresponding to at least one of a Design Under Verification or System Under Verification (DUV/SUV). The system comprises a testbench and the DUV/ SUV connected to the testbench. The testbench is configured to generate a set of input packets to be processed by the DUV/ SUV. Further, the testbench is also configured to generate corresponding expected output packets. If an expected output packet does not match the corresponding actual output packet generated by the DUV/ SUV after processing the set of input packets, or if the actual output packet is not generated by the DUV/ SUV (when it is expected to), the testbench is configured to capture transaction specific stage-wise log data for the corresponding expected output packet in a separate TSSW log file.

No. of Pages : 28 No. of Claims : 14

(12) PATENT APPLICATION PUBLICATION
(21) Application No.201711000581 A
(19) INDIA
(22) Date of filing of Application :06/01/2017
(43) Publication Date : 20/01/2017

(54) Title of the invention : MINIMUM MAGNETIC POLE HIGHEST EFFICIENCY HYDRO GENERATORS

(51) International classification :F03B13/10
(31) Priority Document No :NA
(32) Priority Date :NA
(33) Name of priority country :NA
(86) International Application No :NA
Filing Date :NA
(87) International Publication No : NA
(61) Patent of Addition to Application Number :NA
Filing Date :NA
(62) Divisional to Application Number :NA
Filing Date :NA

(71)**Name of Applicant :**
1)KULWANT SINGH SHANOA
Address of Applicant :H.NO.1026 SECTOR-42-B CHANDIGHAR-160036 INDIA Chandigarh India
2)GURLEEEN DHANOA
(72)**Name of Inventor :**
1)KULWANT SINGH DHANOA
2)GURLEEN DHANOA

(57) Abstract :
we should run the hydro turbine & generator at the specific speed without any deviation i.e at more efficiency without any compromise min no.of magnetic poles be used in the generator coupled so as to reduce the size to the smallest possible size. which will reduce the mechanical losses and thereby increase the generation form the some resource. Although the generation as at frequency of much different or deviated from standard 50 hz.so power be firstly converted to d.c by thyristr bridges and then again converted to suitable frequency of the grid or the load.

No. of Pages : 4 No. of Claims : 7

(12) PATENT APPLICATION PUBLICATION
(21) Application No.201711000582 A
(19) INDIA
(22) Date of filing of Application :06/01/2017
(43) Publication Date : 20/01/2017

(54) Title of the invention : CONTENCOUS FLUID DESILTATION TO LOWER LEVELS,

(51) International classification :F27D15/02
(31) Priority Document No :NA
(32) Priority Date :NA
(33) Name of priority country :NA
(86) International Application No :NA
Filing Date :NA
(87) International Publication No : NA
(61) Patent of Addition to Application Number :NA
Filing Date :NA
(62) Divisional to Application Number :NA
Filing Date :NA

(71)**Name of Applicant :**
1)KULWANT SINGH DHANOA
Address of Applicant :H.NO.1026 SECTOR-42-B CHANDIGARH-160036 INDIA Chandigarh India
2)GURLEEEN DHANOA
(72)**Name of Inventor :**
1)KULWANT SINGH DHANOA
2)GURLEEN DHANOA

(57) Abstract :
During rainy season when the fluid as available in abundance but it could not be used due to the high silt contents mainly in hydro generation.but with the help of continuous fluid desil proper to lower levels the silt levels will be reduced so such level that the fluid could be used for power generation and this will make windfall gone.

No. of Pages : 7 No. of Claims : 7

(12) PATENT APPLICATION PUBLICATION
(21) Application No.201711000705 A
(19) INDIA
(22) Date of filing of Application :06/01/2017
(43) Publication Date : 20/01/2017

(54) Title of the invention : SYSTEM, METHOD AND APPARATUS FOR ISLANDING OPERATION OF RAJASTHAN TECHNICAL UNIVERSITY CAMPUS

(51) International classification :G01R31/28
(31) Priority Document No :NA
(32) Priority Date :NA
(33) Name of priority country :NA
(86) International Application No :NA
Filing Date :NA
(87) International Publication No : NA
(61) Patent of Addition to Application Number :NA
Filing Date :NA
(62) Divisional to Application Number :NA
Filing Date :NA

(71)**Name of Applicant :**
1)Dheeraj kumar palwalia
Address of Applicant :E-6 Shrinathpuram, Sector E Kota Rajasthan India
2)Prakash Kumar
(72)**Name of Inventor :**
1)Dheeraj kumar palwalia
2)Prakash Kumar

(57) Abstract :
This invention presents process of techno-economic feasibility to adopt islanding operation of Rajasthan Technical University Campus located in Kota. Proposed system configuration reduces battery requirement and assures fossil fuel free power security in low wind regions of central part of Rajasthan (a north-east Indian state) having enormous potential of solar PV generation. Obtained results have proved that installation of wind turbines accounts to installation cost optimization and reduction in net unit energy cost in the proposed region. Setting a path of pollution free energy future, the present invention presents a hybrid wind-PV-battery based micro-grid in standalone mode for low wind region having potential solar PV generation for meeting energy demand. Results have been keenly calculated by different feasibility softwares for obtaining optimal system configuration with cent percent renewable fraction. For considered lifetime of involved conversion components, obtained energy cost has been found competitive with grid connected system, grid-diesel system and diesel generators

No. of Pages : 11 No. of Claims : 3

(12) PATENT APPLICATION PUBLICATION
(21) Application No.201611011958 A
(19) INDIA
(22) Date of filing of Application :05/04/2016
(43) Publication Date : 20/01/2017

(54) Title of the invention : AUTOCLAVED FLY ASH BRICKS AND METHOD OF MANUFACTURING THE SAME

(51) International classification :C04B28/14
(31) Priority Document No :NA
(32) Priority Date :NA
(33) Name of priority country :NA
(86) International Application No :NA
Filing Date :NA
(87) International Publication No : NA
(61) Patent of Addition to Application Number :NA
Filing Date :NA
(62) Divisional to Application Number :NA
Filing Date :NA

(71)**Name of Applicant :**
1)PRACHA, MEHMOOD
Address of Applicant :G-17, FIRST FLOOR, NIZAMUDDIN WEST, NEW DELHI-110013, DELHI, INDIA Delhi India
(72)**Name of Inventor :**
1)PRACHA, MEHMOOD

(57) Abstract :
Autoclaved fly ash bricks, tiles, curb stones, blocks etc. and method of manufacturing the same are disclosed. In an embodiment of the present invention, there is provided a process of manufacturing fly ash bricks, wherein the pond ash or fly ash is used up to 92% with or without siliceous sand after mixing with burnt lime powder or hydrated lime power or sludge of acetylene gas, oxygen gas and water. The process is carried out by reacting the mass followed by giving shape to the bricks etc. by high speed robotic mechanical or hydraulic presses and finally cured in autoclaves to produce good quality bricks etc.

No. of Pages : 25 No. of Claims : 17

(12) PATENT APPLICATION PUBLICATION
(21) Application No.201711001281 A
(19) INDIA
(22) Date of filing of Application :12/01/2017
(43) Publication Date : 20/01/2017

(54) Title of the invention : AGRO-HOMOEOPATHIC DRUG (KRISHI SAADRISHYA DAVA)

(51) International classification :A01N43/16
(31) Priority Document No :NA
(32) Priority Date :NA
(33) Name of priority country :NA
(86) International Application No :NA
Filing Date :NA
(87) International Publication No : NA
(61) Patent of Addition to Application Number :NA
Filing Date :NA
(62) Divisional to Application Number :NA
Filing Date :NA

(71)**Name of Applicant :**
1)DR. KAPILESWAR PRASAD SINHA
Address of Applicant :H.NO-146 GYAN KHAND-3 INDIRAPURAM GHAZIABAD U.P-201014 INDIA Uttar Pradesh India
(72)**Name of Inventor :**
1)DR. KAPILESWAR PRASAD SINHA

(57) Abstract :
Agro-Homeopathic drugs and techniques are not only aptly suited for the control of diseases and pests of- plants, fruits rots,mosaics, water stagnation and draught etc., but are also able to keep plants healthy and to increase fruit size and yields. They have been found to be non-poisonous, non-toxic, non-polluting, easy, effective t economical and very suitable to our poor and ignorant- farmers. With the objective of eliminating the health hazards, menace and toxic effects of fast uses of phytomedicines (insecticides, nematicides, fungicides and herbicides) and fertilizers in the modern agriculture in pursuit of more yield per unit area, time and cost to meet the needs of teeming millions of India, a novel method of harnessing homoeopathy in the field of agriculture i.e. agro-homoeopathy has been found very useful and effective and is a crying need of the hour (Sinha, 1975) . Like human beings and animals, plants also respond to hygiene, sanitation and environment. Plants are also sensitive and form simple antibodies called phytoalexins and have minor chances of.immunization. These open the door of selection of a homoeopathic medicine for plant patients just like human patients both for curative and prophylactic action based on objective symptoms.

No. of Pages : 21 No. of Claims : 10

(12) PATENT APPLICATION PUBLICATION
(21) Application No.3986/DEL/2015 A
(19) INDIA
(22) Date of filing of Application :08/01/2016
(43) Publication Date : 20/01/2017

(54) Title of the invention : FLOATING SOLAR PLATFORM FOR SOLAR POWER GENERATION, SYSTEM AND MEHTOD OF DEPLOYMENT

(51) International classification :H01L25/00
(31) Priority Document No :NA
(32) Priority Date :NA
(33) Name of priority country :NA
(86) International Application No :NA
Filing Date :NA
(87) International Publication No : NA
(61) Patent of Addition to Application Number :NA
Filing Date :NA
(62) Divisional to Application Number :NA
Filing Date :NA

(71)**Name of Applicant :**
1)KUMAR PANKAJ
Address of Applicant :A-6/3 JHILMIL INDUSTRIAL AREA, G.T. ROAD, DELHI - 110095, INDIA Delhi India
2)AGARWAL SIDDHANT
(72)**Name of Inventor :**
1)KUMAR PANKAJ
2)AGARWAL SIDDHANT

(57) Abstract :
A floating solar platform includes a unified floating structure that is formed of a horizontal mesh of one or more horizontal support members connected to each other in a matrix pattern, and one or more vertical support members fixedly mounted on the horizontal mesh, a horizontal planar modular deck fixedly mounted on the unified floating structure, the horizontal planar modular deck being provided with at least one of: cables, inverters, micro-inverters, batteries, mechanical couplings, flat structural panels, angle-bars, I-beams and walkway panels, one or more arrays of solar panels mounted on the horizontal planar modular deck for generating electricity from solar energy, and a cable system connected to the one or more arrays of solar panels for supplying power to utility and an off-grid facility.

No. of Pages : 39 No, of Claims :12

(12) PATENT APPLICATION PUBLICATION
(19) INDIA
(22) Date of filing of Application :18/07/2016
(21) Application No.201621024577 A
(43) Publication Date : 20/01/2017

(54) Title of the invention : SKIN FAIRELEAF

(51) International classification :A61K8/41, A61Q19/10, A61K36/886
(31) Priority Document No :NA
(32) Priority Date :NA
(33) Name of priority country :NA
(86) International Application No :NA
Filing Date :NA
(87) International Publication No : NA
(61) Patent of Addition to Application Number :NA
Filing Date :NA
(62) Divisional to Application Number :NA
Filing Date :NA

(71)**Name of Applicant :**
1)Uttam Munver
Address of Applicant :26 WESTBAY VIEW AVENUE ENGLEWOOD CLIFFS NEW JERSY 07632 U.S.A.
2)Ravi Munver
(72)**Name of Inventor :**
1)Uttam Munver
2)Ravi Munver

(57) Abstract :
ABSTRACT: The mixtures made out of definite proportions of the Powder/oil from various natural organic Plants, Fruits, Nuts, Vegetable Seeds, Fruit Spices, Berry, Flower and Vitamins, protect and improve Skin from the damages caused because of Sun Rays and Ultraviolet Rays, Pollution, Smoke, Dust, Burn, Infections, Acne, Trauma and other post birth factors. This powder /oil to be consumed and/or applied to the Skin, is able to stop melanin pigment production in skin by inhibiting enzyme Tyrosinase and additionally substrates while protecting against skin cancer risk. This leads to brightening, lightening, whitening and glowing skin.

No. of Pages : 18 No. of Claims : 4

(12) PATENT APPLICATION PUBLICATION
(19) INDIA
(22) Date of filing of Application :03/01/2017
(21) Application No.201721000276 A
(43) Publication Date : 20/01/2017

(54) Title of the invention : A SWITCH BOX FOR SAFETY OF LATHE MACHINES WITH ROTATING CHUCKS

(51) International classification :H01H27/00, B23B25/00
(31) Priority Document No :NA
(32) Priority Date :NA
(33) Name of priority country :NA
(86) International Application No :NA
Filing Date :NA
(87) International Publication No : NA
(61) Patent of Addition to Application Number :NA
Filing Date :NA
(62) Divisional to Application Number :NA
Filing Date :NA

(71)**Name of Applicant :**
1)Advait Pramod Sundare
Address of Applicant :Plot no.37/38 Niwara Co-Op society, Utthan nagar, Gorewada road, Nagpur-13 Maharashtra India
2)Nitin Chopra
(72)**Name of Inventor :**
1)Advait Pramod Sundare
2)Nitin Chopra

(57) Abstract :
A switch box for safety of lathe machines with rotating chucks comprising a slot configured for insertion of chuck key, a slot configured for insertion of switch shaft, a bolt for fastening the housing and switch shaft. The housing provided for the switch tends the operator to remove the chuck key from the chuck and insert it in the housing for starting the lathe machine.

No. of Pages : 15 No. of Claims : 4

(12) PATENT APPLICATION PUBLICATION
(21) Application No.201721000374 A
(19) INDIA
(22) Date of filing of Application :04/01/2017
(43) Publication Date : 20/01/2017

(54) Title of the invention : A DAISY CHAINABLE INTELLIGENT MODULAR SWITCH.

(51) International classification	:H03B1/00	(71)**Name of Applicant :**
(31) Priority Document No	:NA	**1)CWD INNOVATION PRIVATE LIMITED**
(32) Priority Date	:NA	Address of Applicant :101, 1ST FLOOR, PLOT-439,
(33) Name of priority country	:NA	HASHAM PREMJI BUILDING, KALBADEVI, MUMBAI-
(86) International Application No	:NA	400002, MAHARASHTRA, INDIA. Maharashtra India
Filing Date	:NA	(72)**Name of Inventor :**
(87) International Publication No	: NA	**1)SODAGUDI ADITYA XAVIER**
(61) Patent of Addition to Application Number	:NA	
Filing Date	:NA	
(62) Divisional to Application Number	:NA	
Filing Date	:NA	

(57) Abstract :
The present invention provides an improved method and apparatus to create an Intelligent Modular Switch, which is embedded with a singular or plural number of Intelligent Processing Units, Voltage Controlling Circuits and in some embodiments, a singular or plural number of Sensors. The Intelligent Modular Switch is a pluggable element, which is daisy chainable, removable and replaceable by the User as it conforms to a Modular Template. This Intelligent Modular Switch is capable of modulating AC circuits when requested by the Programmable Host.

No. of Pages : 27 No. of Claims : 14

(12) PATENT APPLICATION PUBLICATION
(21) Application No.201721000482 A
(19) INDIA
(22) Date of filing of Application :05/01/2017
(43) Publication Date : 20/01/2017

(54) Title of the invention : IONIZING RADIATION TUBE

(51) International classification :H01J47/02
(31) Priority Document No :NA
(32) Priority Date :NA
(33) Name of priority country :NA
(86) International Application No :NA
Filing Date :NA
(87) International Publication No : NA
(61) Patent of Addition to Application Number :NA
Filing Date :NA
(62) Divisional to Application Number :NA
Filing Date :NA

(71)**Name of Applicant :**
1)DR. RAJPUT CHETANSING KALYANSING
Address of Applicant :DR. CHETANSING RAJPUT, FLAT NO. 6, GOLD-MIST APARTMENT, NEAR SHINDE GUARAGE, NEAR INDIRA NAGAR POLICE STATION, PETHE NAGAR ROAD, INDIRA NAGAR, NASHIK-422011, MAHARASHTRA, INDIA. Maharashtra India
(72)**Name of Inventor :**
1)DR. RAJPUT CHETANSING KALYANSING

(57) Abstract :
An ionizing radiation tube is disclosed, which comprises an electrical gas discharge device, whose anode as well as cathode, both emit ionizing radiation within a certain range of the gas pressure inside the tube, embodying the unique feature of present invention i.e. cathodic emission of ionizing radiation, although the applied voltage is purely DC. In operation, the gas pressure inside the tube was maintained at a certain level and appropriate DC voltage was applied between the electrodes, ionizing radiation was emitted from the anode as well as the cathode, and more particularly from cathode of the discharge tube, unlike usual Cathode ray tubes, Crookes tubes or X-ray tubes which emit ionizing X-radiation from anode only. Thus, the disclosure concerns a bipolar radiation tube, and more especially the cathodic emission of ionizing radiation, which is the most remarkable characteristic of present invention. Moreover, the claimed ionizing radiation from cathode was found to blacken the photographic plate, penetrate few millimeters thick Aluminium sheet and ionize the gas it passes through.

No. of Pages : 17 No. of Claims : 10

(12) PATENT APPLICATION PUBLICATION
(21) Application No.201721000594 A
(19) INDIA
(22) Date of filing of Application :06/01/2017
(43) Publication Date : 20/01/2017

(54) Title of the invention : U-TURN INDICATORS FOR TWO WHEELERS.

(51) International classification :B62D, B60Q1/40
(31) Priority Document No :NA
(32) Priority Date :NA
(33) Name of priority country :NA
(86) International Application No :NA
Filing Date :NA
(87) International Publication No : NA
(61) Patent of Addition to Application Number :NA
Filing Date :NA
(62) Divisional to Application Number :NA
Filing Date :NA

(71)**Name of Applicant :**
1)KRUTIKA K.RATHOD
Address of Applicant :204, SHREEJI KRUPA BUILDING, PANCHAL NAGAR, NALLASOPARA (W), MUMBAI, DIST. THANE - 401203, MAHARASHTRA, INDIA. Maharashtra India
2)RUCHIKA K.RATHOD
(72)**Name of Inventor :**
1)KRUTIKA K.RATHOD
2)RUCHIKA K.RATHOD

(57) Abstract :
The present invention discloses a U-turn signal indicator assembly for two wheelers, indicating other drivers that a vehicle is making a U-turn. The device is activated by the operator by means of a switch that is located on the dashboard of the vehicle. This turn signal assembly has four light assemblies, two installed on the front and the other two installed on the rear of the vehicle. So to sum it up, the present indicator will flash blue color light together with an audible sound for the purpose of displaying that a U-turn is to be made in progress.

No. of Pages : 14 No. of Claims : 4

(12) PATENT APPLICATION PUBLICATION
(21) Application No.201721001301 A
(19) INDIA
(22) Date of filing of Application :12/01/2017
(43) Publication Date : 20/01/2017

(54) Title of the invention : MR. ARM

(51) International classification	:B25J 9/00
(31) Priority Document No	:NA
(32) Priority Date	:NA
(33) Name of priority country	:NA
(86) International Application No	:NA
Filing Date	:NA
(87) International Publication No	: NA
(61) Patent of Addition to Application Number	:NA
Filing Date	:NA
(62) Divisional to Application Number	:NA
Filing Date	:NA

(71)**Name of Applicant :**
1)AKSHAY AVINASH GAPCHUP
Address of Applicant :VIJAYANATH NEAR MANGAL MURTI WADA, GANESH PETH, CHINCHWADGAON, TAL-HAVALI, DIST-PUNE-411033, MAHARASHTRA, INDIA. Maharashtra India
2)ANKIT SHRIKRISHNA WANI
3)DURVESH RAJENDRA GAPCHUP
4)AKSHAY SANJAY AFRE
(72)**Name of Inventor :**
1)AKSHAY AVINASH GAPCHUP
2)ANKIT SHRIKRISHNA WANI
3)DURVESH RAJENDRA GAPCHUP
4)AKSHAY SANJAY AFRE

(57) Abstract :
Now days more and more individual are turning to robots to do their work, because robots are more versatile, accurate, reliable and they also reduces human efforts. So we have develop a robotic arm which can do multiple tasks, we have develop a robot which can do different tasks just by changing its tool heads and the user does not have to worry because the robot can change its tool head by itself according to the task given to it and no human intervention is needed. For the ease of the user we have also given a voice recognition and gesture motion control to the robotic arm by using this function we can control the robot. We can also control the robot remotely via mobile, computer, laptop, etc. We can also teach the robot how to move or perform different activity in different environment. According to this invention, there is provide an single robotic arm which deals with, 1) Perform multiple tasks by changing its tool heads according to that task. 2) The user can teach the robot by controlling it remotely (via computer, laptop, mobile, etc.), or by voice control and gesture recognition. And we can also teach the robot by recording the motion of the servo motors and replaying it.

No. of Pages : 27 No. of Claims : 10

(12) PATENT APPLICATION PUBLICATION
(21) Application No.201721001306 A
(19) INDIA
(22) Date of filing of Application :12/01/2017
(43) Publication Date : 20/01/2017

(54) Title of the invention : MOOR GRASS PRODUCTION MACHINE

(51) International classification :D01D5/20, D01F6/30
(31) Priority Document No :NA
(32) Priority Date :NA
(33) Name of priority country :NA
(86) International Application No :NA
Filing Date :NA
(87) International Publication No : NA
(61) Patent of Addition to Application Number :NA
Filing Date :NA
(62) Divisional to Application Number :NA
Filing Date :NA

(71)**Name of Applicant :**
1)SHAILESH RAMCHANDRA RACHKAR
Address of Applicant :A/P VIZORI TAL-MALSHIRAS DIST- SOLAPUR, 413118, MAHARASHTRA, INDIA. Maharashtra India
(72)**Name of Inventor :**
1)SHAILESH RAMCHANDRA RACHKAR

(57) Abstract :
According to this invention, there is provide moor grass production machine which deals with 1) Preservation of green fodder with added nutrient values for longer period of time 2) Dehydrations and pressing of shafted grass/Green Maize with a Machine. 3) Air-tight packing of green fodder into the bags. In this invention, there is provided moor grass production machine in which we are pressing and dehydrating the green fodder into silage bag.

No. of Pages : 11 No. of Claims : 7

(12) PATENT APPLICATION PUBLICATION
(21) Application No.201721001310 A
(19) INDIA
(22) Date of filing of Application :12/01/2017
(43) Publication Date : 20/01/2017

(54) Title of the invention : AUTOMATIC HEADLIGHT DIMMER

(51) International classification	:B60Q1/08, G01J1/02, B60Q1/14
(31) Priority Document No	:NA
(32) Priority Date	:NA
(33) Name of priority country	:NA
(86) International Application No	:NA
Filing Date	:NA
(87) International Publication No	: NA
(61) Patent of Addition to Application Number	:NA
Filing Date	:NA
(62) Divisional to Application Number	:NA
Filing Date	:NA

(71)**Name of Applicant :**
1)UTKARSH VISHWASRAO SALUNKE
Address of Applicant :VISHWAS SALUNKE RESIDING AT FATTEPUR, POST NAGARSOGA, TAL-AUSA, DIST-LATUR-413520, MAHARASHTRA, INDIA. Maharashtra India
(72)**Name of Inventor :**
1)UTKARSH VISHWASRAO SALUNKE

(57) Abstract :
According to this invention, there is a new headlight switching system is provided. 1) This circuit will be used for automatically dimming lights of opposing vehicles. 2) Principle of this device is radio signal transmitted by your vehicle is received by coming vehicle. That signal is converted into D.C. signal (40) and given to relay. That switches between high and lowbeam. 3) The construction of device is so simple that it can be installed in any vehicle like two wheelers, four wheelers, heavy transports etc. Also in mass production its price can be reduced that everyone can afford. 4) In order to reduce response time, all the stages in receiver circuit after RF Amplifier has been dropped and output of amplifier is directly converted into D.C. Signal. 5) in order to create unique frequency for every device, facility same as mobile networks must be adopted, for that purpose bandwidth will be purchased. ID provided by this facility will have its unique frequency.

No. of Pages : 16 No. of Claims : 5

(12) PATENT APPLICATION PUBLICATION
(21) Application No.201721001600 A
(19) INDIA
(22) Date of filing of Application :16/01/2017
(43) Publication Date : 20/01/2017

(54) Title of the invention : A MULTI SPINDLE DIAMOND HONING MACHINE.

(51) International classification	:B24B57/02, B24B33/10,	(71)**Name of Applicant :** **1)MR. AJIT SAMANI** Address of Applicant :F24/1, MIDC, SHIROLI, KOLHAPUR-416 122, MAHARASHTRA, INDIA. Maharashtra India
(31) Priority Document No	:NA	
(32) Priority Date	:NA	
(33) Name of priority country	:NA	
(86) International Application No	:NA	(72)**Name of Inventor :** **1)MR. AJIT SAMANI**
Filing Date	:NA	
(87) International Publication No	: NA	
(61) Patent of Addition to Application Number	:NA	
Filing Date	:NA	
(62) Divisional to Application Number	:NA	
Filing Date	:NA	

(57) Abstract :
Present invention disclose a multi spindle diamond honing machine comprising a base for entire assembly; a Column mounted on rear side of the base ;a pair of Linear Motion Guideways mounted vertically on front side of the column; a slider, onto which Honing Head containing a spindle being mounted, which further being connected to the Column by a Slider Bracket; a Linear Motion Assembly mounted on the top of the Column; a Honing tool held by a tool holder clamped in the spindle; the machine further having a PLC or CNC control with suitable electricals to support the system; the machine supported to attain different spindle speed and feed rates for different parts thus maintaining high spindle rpm thereby facilitating it to achieve the parameters like surface finish on final stage; the machine occupies less space, consumes less power and easy to maintain.

No. of Pages : 12 No. of Claims : 10

(12) PATENT APPLICATION PUBLICATION
(21) Application No.201721000615 A
(19) INDIA
(22) Date of filing of Application :06/01/2017
(43) Publication Date : 20/01/2017

(54) Title of the invention : ODONO SOCKS SPRAY

(51) International classification	:A61Q 15/00	(71)**Name of Applicant :**
(31) Priority Document No	:NA	**1)MR. PRASHANT BHALERAO**
(32) Priority Date	:NA	Address of Applicant :B-701/702, YUGANDHAR SUDAMA BUILDING, MANPADA ROAD, OPP. NANA NANI PARK, DOMBIVALI (EAST)-421201, MAHARASHTRA, INDIA. Maharashtra India
(33) Name of priority country	:NA	
(86) International Application No	:NA	
Filing Date	:NA	(72)**Name of Inventor :**
(87) International Publication No	: NA	**1)MR. PRASHANT BHALERAO**
(61) Patent of Addition to Application Number	:NA	
Filing Date	:NA	
(62) Divisional to Application Number	:NA	
Filing Date	:NA	

(57) Abstract :
Odono socks spray is unique prepration in which Lemongrass and Patchouli of essential oils are processed with Triclosan and Di propylene glycol in specific quantum under room temperature. It is effective to foul dour of socks by controlling sweating and acting as anti fungal preparation long last for 24 hrs.

No. of Pages : 8 No. of Claims : 5

(12) PATENT APPLICATION PUBLICATION
(21) Application No.201721000991 A
(19) INDIA
(22) Date of filing of Application :10/01/2017
(43) Publication Date : 20/01/2017

(54) Title of the invention : AUTOMATIC MULTI-TASKING CHEMICAL SPRAYING ROBOT

(51) International classification :G06F19/00, G05B19/04
(31) Priority Document No :NA
(32) Priority Date :NA
(33) Name of priority country :NA
(86) International Application No :NA
Filing Date :NA
(87) International Publication No : NA
(61) Patent of Addition to Application Number :NA
Filing Date :NA
(62) Divisional to Application Number :NA
Filing Date :NA

(71)**Name of Applicant :**
1)Mr. Aniket Prashant Kakde
Address of Applicant :C/O Prashant M. Kakde , Kale Lay Out , Near Devrao Patil High School , Wadgaon Road , Yavatmal-445001. Maharashtra India
(72)**Name of Inventor :**
1)Mr. Aniket Prashant Kakde

(57) Abstract :
An Automatic multi-tasking chemical spraying robot is an assembly of multiple tools with various kinds of sensors. Tools and sensors are controlled by microcontroller and microspores. By using mobile remote or voice commands robot operates. Microcontroller converts the voice commands and remote commands into untestable language of tools. Humidity sensor, temperature sensors are inside the sensor box and both work for detecting the humidity and temperature respectively. Tool box consist of camera, DC motor, chemical sprayer, color sprayer and wheels which help to monitoring, controlling and running the robot. Tank is given for filling the chemical of color. As per requirement of chemical spraying sprayer will active with the help of microcontroller and it will start spraying the chemical. Power supply is for giving the potential to robot.

No. of Pages : 4 No. of Claims : 7

(12) PATENT APPLICATION PUBLICATION
(21) Application No.201721001069 A
(19) INDIA
(22) Date of filing of Application :11/01/2017
(43) Publication Date : 20/01/2017

(54) Title of the invention : RIVER SWEEPING ARM, (RIVER CLEANING SYSTEM WITH SCREENING, CHLORINATION & AERATION)

(51) International classification	:B01J20/00, B01D39/00, C02F9/00,
(31) Priority Document No	:NA
(32) Priority Date	:NA
(33) Name of priority country	:NA
(86) International Application No	:NA
Filing Date	:NA
(87) International Publication No	: NA
(61) Patent of Addition to Application Number	:NA
Filing Date	:NA
(62) Divisional to Application Number	:NA
Filing Date	:NA

(71)**Name of Applicant :**
1)KULKARNI SHUBHAM SATISH
Address of Applicant :C-1102, NANO SPACES, OPPO. TO HANGING BRIDGE RAVET, PUNE-412101. Maharashtra India
2)PARADE VAIBHAV
3)RESHMA HASABE
4)GADEKAR PRIYANKA
(72)**Name of Inventor :**
1)KULKARNI SHUBHAM
2)VAIBHAV PARADE
3)RESHMA HASABE
4)PRIYANKA GADEKAR

(57) Abstract :
This system is the solution for river pollution, they reduce water purification load on water treatment plant. This system reduces the suspended particles from river. The chlorination process helps to increase the quality of water by killing the bacteria. We mix the chlorine and increase the dissolved oxygen and removing harmful gases from river water by process of aeration.

No. of Pages : 7 No. of Claims : 5

(12) PATENT APPLICATION PUBLICATION
(21) Application No.201721001119 A
(19) INDIA
(22) Date of filing of Application :11/01/2017
(43) Publication Date : 20/01/2017

(54) Title of the invention : AUTOMATIC PRE-OPERATIVE SCRUBBING SYSTEM (FOREARM AND HAND WASH) AND METHOD THEREOF

(51) International classification	:A47K10/48	(71)**Name of Applicant :**
(31) Priority Document No	:NA	**1)DR. SHARAD C. SHAH**
(32) Priority Date	:NA	Address of Applicant :34/B, GOOLISTAN BLDG,
(33) Name of priority country	:NA	BHULABHAI DESAI ROAD, MUMBAI-400026,
(86) International Application No	:NA	MAHARASHTRA, INDIA. Maharashtra India
Filing Date	:NA	(72)**Name of Inventor :**
(87) International Publication No	: NA	**1)DR. SHARAD C. SHAH**
(61) Patent of Addition to Application Number	:NA	
Filing Date	:NA	
(62) Divisional to Application Number	:NA	
Filing Date	:NA	

(57) Abstract :
The basic principle is that the medical staff starts the machine by foot switch. Start of the machine can be seen in the front panel. At the start of the machine, water switch starts the water sprinkling inside. The surgeon inserts his both hands forearms upto elbows inside the drums, which contain soft rotating bristles. After 30 seconds, antiseptic solution is poured on the entire portion of the arm by a switch antiseptic solution is poured on the entire portion of the arm by a switch antiseptic solution is poured for 30 seconds. After 3 minute of scrub, water is poured again for 1 minute and then automatically water stops and arm blower starts and the arms are totally dried. When surgeon brings the hands out and the machine switches off itself.

No. of Pages : 12 No. of Claims : 3

(12) PATENT APPLICATION PUBLICATION
(21) Application No.201721001147 A
(19) INDIA
(22) Date of filing of Application :11/01/2017
(43) Publication Date : 20/01/2017

(54) Title of the invention : ELECTROMAGNETIC OSCILLATING ENGINE

(51) International classification :H02K33/00, H02K16/00
(31) Priority Document No :NA
(32) Priority Date :NA
(33) Name of priority country :NA
(86) International Application No :NA
Filing Date :NA
(87) International Publication No : NA
(61) Patent of Addition to Application Number :NA
Filing Date :NA
(62) Divisional to Application Number :NA
Filing Date :NA

(71)**Name of Applicant :**
1)WADAVKAR VISHAL NAVNATH
Address of Applicant :158, TAKALI (KH), TAL-KARJAT, DIST-AHMEDNAGAR, MAHARASHTRA, INDIA, 414402 Maharashtra India
(72)**Name of Inventor :**
1)WADAVKAR VISHAL NAVNATH

(57) Abstract :
An electromagnetic oscillating engine by using quick return rocker crank mechanism is capable to produce mechanical power from oscillating motion of rocker (arm). The quick return rocker crank mechanisms are mainly used for converting circular motion into reciprocating or oscillating motion of rocker (arm), but here I use quick return rocker crank mechanism for converting oscillating motion of rocker (arm) into rotary motion crank. The present engine runs by using principle of magnetic repulsion between same poles. The present electromagnetic engine in which crank having 360° rotation in order to forward and backward motion of rocker from its fix position. This mechanism is entirely different from the IC engine mechanism. It requires less component compared to IC engines or recently developed electromagnetic engines, thats reason it having less weight and high power output. The present engine consist two electromagnets and one permanent magnet (block or disc shape). The engine provided with the cylinder which made up of magnetic shielding materials or ceramic. The present engine by using quick return rocker crank mechanism is designed in such way that time taken to complete forward stroke is more than the time taken to complete return stroke. The rocker (arm) allow to swing left dead center to right dead center or right dead center to left dead center with help of bearing support. The permanent magnet is fixed at topmost position of rocker; also electromagnets are screwed to left and right side of cylinder instead of placing at cylinder head. Also rocker pivot is fixed between these two electromagnets. Both electromagnet gets equal power from battery source by suitable voltage with different polarity. The time delay is given to electromagnets for excitation of current in coil by using current controller circuit. The current excites in first electromagnetic coil then permanent magnet reaches to the left dead center due to repelling force between same poles, thus crank completes its half rotation. After some time interval current excites in second electromagnetic coil then permanent magnet reaches to right dead center or initial position due to repelling force between same poles with respect fixed position of rocker, thus crank completes its remaining half rotation. The present engine describes two strokes namely forward and backward strokes, both are power strokes. If we require more power then uses multiple cylinders in which make same arrangement as above mentioned that gives equal motion to crankshaft. The power supply is controlled by microcontroller with the help of power splitter, timer, and relay switch arrangement.

No. of Pages : 22 No. of Claims : 6

(12) PATENT APPLICATION PUBLICATION
(21) Application No.201621030584 A
(19) INDIA
(22) Date of filing of Application :07/09/2016
(43) Publication Date : 20/01/2017

(54) Title of the invention : BANANA MULCHER WITH AXE SHAPE FIXED BLADE OCTAGONAL ROTOR

(51) International classification	:F16F 15/00
(31) Priority Document No	:NA
(32) Priority Date	:NA
(33) Name of priority country	:NA
(86) International Application No	:NA
Filing Date	:NA
(87) International Publication No	: NA
(61) Patent of Addition to Application Number	:NA
Filing Date	:NA
(62) Divisional to Application Number	:NA
Filing Date	:NA

(71)**Name of Applicant :**
1)LANCER LASER TECH LIMITED
Address of Applicant :Survey No: 1434P/2, Chhatral Mahesana National Highway, Village: Rajpur, Tal.: Kadi, Dist. ahesana, Gujarat Gujarat India
(72)**Name of Inventor :**
1)LANCER LASER TECH LIMITED

(57) Abstract :
In this invention the machine with octagonal rotor at high rotational speed [Fig.1]. The octagonal rotor have eight faces so with mounting two sets of blades in each face for easy balancing [Fig.5]. The machine rotates at very high rotational speed so, for balancing and fixing centre blade the octagonal rotor is used.

No. of Pages : 7 No. of Claims : 1

(12) PATENT APPLICATION PUBLICATION
(19) INDIA
(22) Date of filing of Application :29/12/2016
(21) Application No.201624044912 A
(43) Publication Date : 20/01/2017

(54) Title of the invention : METHOD FOR MANUFACTURING ARRAY SUBSTRATE, AND ARRAY SUBSTRATE, DISPLAY PANEL AND DISPLAY DEVICE

(51) International classification :H01L21/02, H01L29/66
(31) Priority Document No :201610848316.5
(32) Priority Date :23/09/2016
(33) Name of priority country :China
(86) International Application No :NA
Filing Date :NA
(87) International Publication No : NA
(61) Patent of Addition to Application Number :NA
Filing Date :NA
(62) Divisional to Application Number :NA
Filing Date :NA

(71)**Name of Applicant :**
1)SHANGHAI TIANMA MICRO-ELECTRONICS CO., LTD.
Address of Applicant :889 Huiqing Rd., Pudong New District, Shanghai China 201201 China
2)TIANMA MICRO-ELECTRONICS CO., LTD.
(72)**Name of Inventor :**
1)XU, Chuanzhi
2)XIE, Zhengfang
3)LI, Xiongping
4)TONG, Xiaoyang

(57) Abstract :
A method for manufacturing an array substrate, and an array substrate, a display panel and a display device are provided. The method may include: forming, on one side of a substrate, a gate electrode layer, a gate insulation layer and a semiconductor layer, wherein the gate electrode layer has a same pattern as the semiconductor layer; forming an etching stop layer on the semiconductor layer; forming a first, second hole and third through holes by patterning the etching stop layer; forming a source electrode layer and a drain electrode layer on the etching stop layer, wherein the source electrode layer is electrically connected with the semiconductor layer via the first through hole, and the drain electrode layer is electrically connected with the semiconductor layer via the second through hole; forming an active layer by etching the semiconductor layer at the location corresponding to the third through hole.

No. of Pages : 41 No. of Claims : 18

(12) PATENT APPLICATION PUBLICATION
(19) INDIA
(22) Date of filing of Application :30/12/2016
(21) Application No.201624045109 A
(43) Publication Date : 20/01/2017

(54) Title of the invention : DRIVING UNIT, DRIVING METHOD, DRIVING CIRCUIT, AND DISPLAY PANEL

(51) International classification	:G06F3/038, G06F3/14, G09G5/12
(31) Priority Document No	:201610616835.9
(32) Priority Date	:29/07/2016
(33) Name of priority country	:China
(86) International Application No	:NA
Filing Date	:NA
(87) International Publication No	: NA
(61) Patent of Addition to Application Number	:NA
Filing Date	:NA
(62) Divisional to Application Number	:NA
Filing Date	:NA

(71)**Name of Applicant :**
1)XIAMEN TIANMA MICRO-ELECTRONICS CO., LTD
Address of Applicant :6999 West Xiangan Rd., Xiangan District, Xiamen City, Fujian Province 361101, China China
2)TIANMA MICRO-ELECTRONICS CO., LTD.
(72)**Name of Inventor :**
1)LAI, Qingjun
2)CAO, Zhaokeng
3)SHEN, Poping
4)ZHOU, Xiufeng
5)ZHU, Yihua
6)ZHANG, Zhaodong

(57) Abstract :
A driving unit, a driving method, a driving circuit, and a display panel are disclosed. The driving unit is for providing a signal to a touch electrode of an array substrate, comprising: a first control signal input terminal, a second control signal input terminal, a gating signal input terminal, a touch control driving module, a display driving module, and a signal output terminal. The touch control driving module is configured to output a touch control signal to the signal output terminal, and is controlled by a signal inputted through the first control signal input terminal, a signal inputted through the second control signal input terminal, and a signal inputted through the gating signal input terminal. The display driving module is configured to output a common voltage signal to the signal output terminal, and is controlled by the signal inputted through the gating signal input terminal.

No. of Pages : 59 No. of Claims : 19

(12) PATENT APPLICATION PUBLICATION
(21) Application No.201621042010 A
(19) INDIA
(22) Date of filing of Application :08/12/2016
(43) Publication Date : 20/01/2017

(54) Title of the invention : REMOVABLE CHARGING PIN MECHANISM

(51) International classification	:G01N27/416	(71)**Name of Applicant :**
(31) Priority Document No	:NA	**1)Abhijit Manohar Bankar**
(32) Priority Date	:NA	Address of Applicant :A/P Warulwadi, Narayangaon, Tal : - Junnar, Dist: - Pune - 410504, Maharashtra India
(33) Name of priority country	:NA	**2)Shrirang Ambadas Doke**
(86) International Application No	:NA	(72)**Name of Inventor :**
Filing Date	:NA	**1)Abhijit Manohar Bankar**
(87) International Publication No	: NA	**2)Shrirang Ambadas Doke**
(61) Patent of Addition to Application Number	:NA	
Filing Date	:NA	
(62) Divisional to Application Number	:NA	
Filing Date	:NA	

(57) Abstract :
Disclosed is a removable charging mechanism for rechargeable devices that includes a base structure defined by a vertical portion and a horizontal portion. The vertical portion has an outer cylinder member configured thereon. The outer cylinder member has a first end portion and a second end portion. The first end portion receives a charging pin of an external charger. The second end portion receives an inner cylinder member that contains a conducting metallic rod centrally positioned therein using a first pair of springs. The inner cylinder member connects to a pivot. The removable charging mechanism includes a first iron core and a second iron core. The first iron core has a first electromagnetic coil wound thereon and also includes a pair of rods that receives a second pair of springs. The second iron core positions on the second pair of springs. The second iron core has a second electromagnetic coil wound thereon.

No. of Pages : 23 No. of Claims : 13

(12) PATENT APPLICATION PUBLICATION
(21) Application No.201621031136 A
(19) INDIA
(22) Date of filing of Application :12/09/2016
(43) Publication Date : 20/01/2017

(54) Title of the invention : SOLAR TRACKING SYSTEM WITH SPUR GEAR ARRANGEMENT

(51) International classification	:F24J2/38	
(31) Priority Document No	:NA	
(32) Priority Date	:NA	
(33) Name of priority country	:NA	
(86) International Application No	:NA	
Filing Date	:NA	
(87) International Publication No	: NA	
(61) Patent of Addition to Application Number	:NA	
Filing Date	:NA	
(62) Divisional to Application Number	:NA	
Filing Date	:NA	

(71)**Name of Applicant :**
1)Shubham Gorde
Address of Applicant :Department of Mechanical Engineering, Jayawantrao Sawant College of Engineering, Pune, Maharashtra, 411028 Maharashtra India
2)Jerryn Joy
3)Mayur Jain
4)Sandeep Kumbhar
5)M G Jadhav
6)Pradeep Patil
7)Virendra Bhojwani
(72)**Name of Inventor :**
1)Shubham Gorde
2)Jerryn Joy
3)Mayur Jain
4)Sandeep Kumbhar
5)M G Jadhav
6)Pradeep Patil
7)Virendra Bhojwani

(57) Abstract :
The present disclosure focuses on increased extraction of solar energy with the help of photovoltaic cell through the development of Sun tracking system using Spur gear arrangement. Emphasizing the importance of non-renewable energy sources, solar energy has the potential to be major primary source of energy which will satisfy the energy needs in the coming years ahead. There is a need to enhance the effective utilization of solar energy since the angle of incidence of the solar radiation changes throughout the day with position of the sun in the sky. A feasible approach to maximize the power output of solar array has been use of sun tracking solar panel which has utilized worm and worm gear or chain drive mechanism for continuously tracking throughout the day so as to have solar rays incident at 90 degrees to the solar panel. In the stationary panels the arrangement reduces that production of energy and the efficiency falls when the solar incident angles are different from ninety degrees. The single axis solar tracking system in disclosure uses spur gear pair to move with the sun position, in order to put the photovoltaic in such way that it receives sunlight at a perpendicular angle with the help of mechanical gear system. Use of Spur gear gives unique advantages of ease of manufacturing, low cost, high transmission efficiency. The said mechanical system in this embodiment uses spur gear arrangement for tilting the solar array with accuracy with the help of electronic control module and sensors. The tracker contains electronic module which controls the system by communicating with the sensors and motor driver based on the movement of the sun.

No. of Pages : 22 No. of Claims : 3

(12) PATENT APPLICATION PUBLICATION
(21) Application No.201621044490 A
(19) INDIA
(22) Date of filing of Application :27/12/2016
(43) Publication Date : 20/01/2017

(54) Title of the invention : SYSTEM AND METHOD FOR OPERATING A PUMP REMOTELY

(51) International classification :G01D4/14, B67D7/08
(31) Priority Document No :NA
(32) Priority Date :NA
(33) Name of priority country :NA
(86) International Application No :NA
Filing Date :NA
(87) International Publication No : NA
(61) Patent of Addition to Application Number :NA
Filing Date :NA
(62) Divisional to Application Number :NA
Filing Date :NA

(71)**Name of Applicant :**
1)Ieyze Corporation Pvt. Ltd.
Address of Applicant :3rd Floor, Mahalaxmi Heights, Rahatni Chowk, Pimple Saudagar, Pune-411017, Maharashtra, India Maharashtra India
(72)**Name of Inventor :**
1)Sharad Kale

(57) Abstract :
Method(s) and system(s) for managing discharge from a pump are described. The present disclosure may direct to a system 100 wherein a motor may be accessed remotely and operated by a user device. The system is further enabled to work under conditions wherein the input source may comprise of a varying power source or power sources with different rating. The system may further enable the electronic control 104 unit to call a user having the user device 103 for any alerts regarding the operation of the motor pump 105. The alerts may further comprise power cut-off, water availability, power availability after power cut-off and the like. The user device 103 may be enabled to send voice, SMS or an alert on the mobile application to one or more specified user. In case of failure of delivery to first authorised user, the electronic control unit 104 may further send the alert to another authorised person.

No. of Pages : 19 No. of Claims : 10

(12) PATENT APPLICATION PUBLICATION
(21) Application No.201721001636 A
(19) INDIA
(22) Date of filing of Application :16/01/2017
(43) Publication Date : 20/01/2017

(54) Title of the invention : DNA BARCODE FOR SPECIES IDENTIFICATION OF SEDGE PLANTS AND METHODS THEREOF.

(51) International classification :C12Q1/68
(31) Priority Document No :NA
(32) Priority Date :NA
(33) Name of priority country :NA
(86) International Application No :NA
Filing Date :NA
(87) International Publication No : NA
(61) Patent of Addition to Application Number :NA
Filing Date :NA
(62) Divisional to Application Number :NA
Filing Date :NA

(71)**Name of Applicant :**
1)TIWARI SHARAD
Address of Applicant :DIRECTOR, BIOTECHNOLOGY CENTRE, JAWAHARLAL NEHRU KRISHI VISHWA VIDYALAYA, JABALPUR, MADHYA PRADESH, INDIA-482004. Madhya Pradesh India
(72)**Name of Inventor :**
1)TANTWAI, KEERTI
2)TIWARI SHARAD
3)TRIPATHI, NIRAJ

(57) Abstract :
Present invention discloses a method of generating a DNA barcode for identification of sedge plant species comprising the steps of Collection of a sedge plant sample, DNA isolation from plant or a part thereof, Amplification of a plastid based barcode region selected from ycfl(b), matK, trnH-psbA and rbcL, with the help of barcode loci specific primer pair consisting of forward and reverse primers, Obtaining a sequence of the amplified product, Identifying the plant by matching the obtained sequence with a reference library and/or by constructing a phylogenetic tree, and finally Obtaining a species specific DNA barcode from the analyzed sequence. The invention also discloses a method of identification or authentication of a herbal formulation containing sedge plant or part thereof e.g. Cyperus rotundus or Cyperus esculentus, by application of the disclosed method.

No. of Pages : 25 No. of Claims : 10

(12) PATENT APPLICATION PUBLICATION
(19) INDIA
(22) Date of filing of Application :22/12/2016
(21) Application No.201624043854 A
(43) Publication Date : 20/01/2017

(54) Title of the invention : OLED ARRAY SUBSTRATE, DISPLAY PANELAND DISPLAY DEVICE

(51) International classification	:H01L29/66, H01L29/786, H01L29/423
(31) Priority Document No	:201610846783.4
(32) Priority Date	:23/09/2016
(33) Name of priority country	:China
(86) International Application No	:NA
Filing Date	:NA
(87) International Publication No	: NA
(61) Patent of Addition to Application Number	:NA
Filing Date	:NA
(62) Divisional to Application Number	:NA
Filing Date	:NA

(71)**Name of Applicant :**
1)SHANGHAI TIANMA MICRO-ELECTRONICS CO., LTD.
Address of Applicant :889, Huiqing Rd., Pudong New District, Shanghai 201201 P.R. China China
2)TIANMA MICRO-ELECTRONICS CO., LTD.
(72)**Name of Inventor :**
1)ZENG, Yang
2)ZHOU, Xingyao
3)WANG, Lihua
4)LIU, Liang

(57) Abstract :
An OLED array substrate is provided, which includes multiple sub-pixels defined by multiple data lines and multiple scan lines, and a resistance-type pressure sensing element located in non-opening regions of the sub-pixels. The pressure sensing element includes multiple resistors. Each resistor has a serpentine wire structure. The serpentine wire structure includes a first sub-wire and a second sub-wire connected to two adjacent first sub-wires. Both the first sub-wire and the second sub-wire are located in non-opening regions of the sub-pixels on the OLED array substrate. The resistance-type pressure sensing element is arranged in a display region of the OLED array substrate without influencing the display effect of a display panel or a display device. An extension direction of a projection of the first sub-wire on an array substrate intersects with extension directions of projections of the data lines and the scan lines on the array substrate.

No. of Pages : 34 No. of Claims : 19

(12) PATENT APPLICATION PUBLICATION
(21) Application No.201621010490 A
(19) INDIA
(22) Date of filing of Application :28/03/2016
(43) Publication Date : 20/01/2017

(54) Title of the invention : A SYSTEM FOR DATA COMPRESSION USING ORTHOGONAL WAVELET TRANSFORM ON HALF TONE IMAGE/VEDIO

(51) International classification	:H04N7/00	(71)**Name of Applicant :**
(31) Priority Document No	:NA	**1)SANGE; SANJAY RAMKRISHNA**
(32) Priority Date	:NA	Address of Applicant :FLAT NO 301, BLDG NO. 05,
(33) Name of priority country	:NA	BALAJI PRANGAN, SECTOR-4, KHARGHAR, NAVI-
(86) International Application No	:NA	MUMBAI-410210, MAHARASHTRA, INDIA. Maharashtra
Filing Date	:NA	India
(87) International Publication No	: NA	(72)**Name of Inventor :**
(61) Patent of Addition to Application Number	:NA	**1)SANGE; SANJAY RAMKRISHNA**
Filing Date	:NA	
(62) Divisional to Application Number	:NA	
Filing Date	:NA	

(57) Abstract :
ABSTRACT The present invention relates to system and a method of compression of data. More particularly, the present invention provides a modified method for optimization of band width and compression of data for transferring over internet and storage of image/video. The modified Hybrid Half tone Orthogonal Wavelet Transform (HT-OWT) CODEC is used on half tone images for bandwidth optimization of data in multimedia application. The present invention furthermore relates to method for compression of data in multimedia application with improving image quality.

No. of Pages : 28 No. of Claims : 10

(12) PATENT APPLICATION PUBLICATION
(21) Application No.201621041402 A
(19) INDIA
(22) Date of filing of Application :03/12/2016
(43) Publication Date : 20/01/2017

(54) Title of the invention : A SYSTEM FOR TRACKING SCHOOL STUDENTS AND SCHOOL BUSES AND COMMUNICATING WITH THE STUDENTS AND THEIR PARENTS

(51) International classification	:G08B1/08, H04W8/08
(31) Priority Document No	:NA
(32) Priority Date	:NA
(33) Name of priority country	:NA
(86) International Application No	:NA
Filing Date	:NA
(87) International Publication No	: NA
(61) Patent of Addition to Application Number	:NA
Filing Date	:NA
(62) Divisional to Application Number	:NA
Filing Date	:NA

(71)**Name of Applicant :**
1)NITAN CHHATWAL
Address of Applicant :PLOT 2, KRISHANI BUNGLOW, NEW INDIA SOCIETY, J.V.P.D. SCHEME, JUHU, MUMBAI-400 049, MAHARASHTRA, INDIA Maharashtra India
(72)**Name of Inventor :**
1)NITAN CHHATWAL

(57) Abstract :
A system for tracking school students and school buses comprises of a plurality of smart phones/handheld devices (2) which are connected to the Internet (1). A plurality of face recognition cameras (3) fitted with RFID readers is installed in a distributed fashion, typically at school entry/exit gates and entry/exit doors of the school buses. A plurality of GPS devices (4) is installed in distributed fashion in the school buses. A central administering/monitoring station (5) is located in the school, which is adapted to communicate with all the devices of the system. The system is provided with MyDiary mobile app and a special software for communicating with the mobile app.

No. of Pages : 18 No. of Claims : 7

(12) PATENT APPLICATION PUBLICATION
(21) Application No.201741000126 A
(19) INDIA
(22) Date of filing of Application :02/01/2017
(43) Publication Date : 20/01/2017

(54) Title of the invention : IOT BASED HEXACOPTER FOR MECHANIZATION AND AUTOMATION IN TEA PLANTATIONS

(51) International classification	:A23F 3/00	(71)**Name of Applicant :**
(31) Priority Document No	:NA	**1)Dr.s. Jayanthy**
(32) Priority Date	:NA	Address of Applicant :7, KRISHNASAMY NAGAR, 30 FEET ROAD, RAMANATHAPURAM, COIMBATORE, TAMILNADU, INDIA, 641045. Tamil Nadu India
(33) Name of priority country	:NA	
(86) International Application No	:NA	**2)E. Esakki Vigneswaran**
Filing Date	:NA	**3)A. Bharanidharan**
(87) International Publication No	: NA	(72)**Name of Inventor :**
(61) Patent of Addition to Application Number	:NA	**1)Dr.s. Jayanthy**
Filing Date	:NA	**2)E. Esakki Vigneswaran**
(62) Divisional to Application Number	:NA	**3)A. Bharanidharan**
Filing Date	:NA	

(57) Abstract :
Tea cultivation in India has a long history of application in traditional system of medicine as well as for consumption. India is cultivating and consuming tea for thousands of years. India and China are the largest producers as well as the consumers of tea. Manual tea-plucking is a tedious job. Migration of the new generation to other fields leads to shortage of labor in tea harvesting sector. The shortage of laborers and the increase in wages made the management to think for an alternate method of tea leaves harvesting. These plantations are bearing big loss since they are unable to harvest the tea leaves on time. This resulted in the mechanization of tea leaves harvesting. Automatic Tea leaf harvesting helps in increasing the output rate of tea harvesting with reduced man power. For developing an efficient system for plantation management, the first and foremost input is the quick availability of accurate data, which normally range from environmental conditions, temperature and humidity, preferably on day-to-day basis or even on hourly basis. Warm and humid conditions, which support best tea growth are conducive to the growth of various pests and diseases in the form of mites, nematodes, algae and fungi that can infect the tea plantations. A proper monitoring system takes preventive actions against these impacts. A Hexacopter design is proposed which is fitted with a shearing Machine for harvesting and collecting the tea leaves and sensor network embedded on the copter monitors the environmental changes and health condition of tea leaves and sends the data to a self learning cloud infrastructure which is implemented in the base station server which can be placed in the tea estate central offices. Thus the tea fields can be effectively harvested at regular interval of time and tea fields can be effectively and remotely monitored.

No. of Pages : 14 No. of Claims : 4

(12) PATENT APPLICATION PUBLICATION
(21) Application No.201741000127 A
(19) INDIA
(22) Date of filing of Application :02/01/2017
(43) Publication Date : 20/01/2017

(54) Title of the invention : IOT BASED AUTOMATED IRRIGATION SYSTEM USING FUZZY LOGIC

(51) International classification	:G06Q 10/00	(71)**Name of Applicant :**
(31) Priority Document No	:NA	**1)Dr.s. Jayanthy**
(32) Priority Date	:NA	Address of Applicant :77, KRISHNASAMY NAGAR, 30 FEET ROAD, RAMANATHAPURAM, COIMBATORE, TAMILNADU, INDIA, 641045. Tamil Nadu India
(33) Name of priority country	:NA	
(86) International Application No	:NA	**2)E. Esakki Vigneswaran**
Filing Date	:NA	**3)A. Bharanidharan**
(87) International Publication No	: NA	(72)**Name of Inventor :**
(61) Patent of Addition to Application Number	:NA	**1)Dr.s. Jayanthy**
Filing Date	:NA	**2)E. Esakki Vigneswaran**
(62) Divisional to Application Number	:NA	**3)A. Bharanidharan**
Filing Date	:NA	

(57) Abstract :
The farmers working in the farm lands ore solely dependent on the rains and bore wells for irrigation of the land. Even if the farm land has a water-pump, manual intervention by farmers is required to turn the pump on/off whenever needed. Promoting applications of modern information technology in agriculture will solve the irrigational issues faced by farmers. This project is designed to overcome the water scarcity issues faced by the farmers in irrigation and to minimize the manual intervention by the farmer. It provides an intelligent system created using Tl CC3200 Launchpad based on lot which obtains the parameters such as temperature, humidity and moisture by using sensors and the microcontroller sends these data to the cloud by using theonboard Wifi. The farmer can easily view, analyze the data and switch the motor On/Off from anyplace across the world just by using the internet. The motor is automatically controlled by using a fuzzy set created by using the temperature, humidity and moisture values. In order to prevent the tampering of the device, a PIR motion sensor module is used . It is important to notice that this system has the potential to save a significant amount of water and provide ease of control, making it a very economical irrigation control option compared to conventional systems

No. of Pages : 17 No. of Claims : 1

(12) PATENT APPLICATION PUBLICATION
(21) Application No.6213/CHE/2015 A
(19) INDIA
(22) Date of filing of Application :18/11/2015
(43) Publication Date : 20/01/2017

(54) Title of the invention : AN APPARATUS FOR POWER GENERATION FROM THE SURFACE OCEAN WAVES IN DEEP SEAS

(51) International classification	:F03B 13/00
(31) Priority Document No	:NA
(32) Priority Date	:NA
(33) Name of priority country	:NA
(86) International Application No	:PCT//
Filing Date	:01/01/1900
(87) International Publication No	: NA
(61) Patent of Addition to Application Number	:NA
Filing Date	:NA
(62) Divisional to Application Number	:NA
Filing Date	:NA

(71)**Name of Applicant :**
1)Dr. AVADHUTA PRUTHVI RAJ
Address of Applicant :H. No. 1-115/90/3, 2nd Villa, Behind Bharat Petrol Bunk, Vinayaka Nagar, Hafeezpet, Hyderabad-500049, Telangana, India. Telangana India
(72)**Name of Inventor :**
1)Dr. AVADHUTA PRUTHVI RAJ

(57) Abstract :
An apparatus for power generation from the surface ocean waves in deep seas Exemplary embodiments of the present disclosure are directed towards an apparatus for power generation from the surface ocean waves in deep seas and methods thereof. Wave energy moves a float, vertically up and down, within the confines of four vertical pillars that are fixed to a buoyant tank. This buoyant tank is placed deep below the ocean surface and the upper surface of the float connects to a rack and pinion system which is coupled to a gearbox. Within the gearbox are freewheels and gears, that drive a generator shaft, in one direction only, as the float oscillates up and down on the ocean waves. For generating large amounts of power, a number of units are placed in a row. Many rows are placed side by side and the mechanical energy of all the rows is transferred to a long horizontal shaft which drives a generator through a gear box. Figure 12

No. of Pages : 33 No. of Claims : 10

(12) PATENT APPLICATION PUBLICATION
(21) Application No.201641042627 A
(19) INDIA
(22) Date of filing of Application :14/12/2016
(43) Publication Date : 20/01/2017

(54) Title of the invention : SOLAR AIR CONDITIONER SYSTEM

(51) International classification	:H02J 7/00
(31) Priority Document No	:NA
(32) Priority Date	:NA
(33) Name of priority country	:NA
(86) International Application No	:NA
Filing Date	:NA
(87) International Publication No	: NA
(61) Patent of Addition to Application Number	:NA
Filing Date	:NA
(62) Divisional to Application Number	:NA
Filing Date	:NA

(71)**Name of Applicant :**
1)SASIDHARARN SHYAM KUMAR
Address of Applicant :TC 64/2280(1) THIRUVALLOM TRIVANDRUM KERALA INDIA 695027 Kerala India
(72)**Name of Inventor :**
1)SASIDHARARN SHYAM KUMAR

(57) Abstract :
A solar air conditioner system configured to run primarily on solar power is disclosed. Said system has the solar panels connected to the inverter AC through a first shunt, wherein said solar panels are connected to a solar MPPT charger through a second shunt, wherein said charger is further connected to a battery bank. A control unit is configured to initialize the MPPT charger, wherein said unit also regulates the current flow through the shunts. The control unit calculates the current requirement of the AC, and prioritizes the current distribution from the solar panels to said load, wherein the surplus current is supplied to the battery bank.

No. of Pages : 16 No. of Claims : 7

(12) PATENT APPLICATION PUBLICATION
(21) Application No.201641043776 A
(19) INDIA
(22) Date of filing of Application :22/12/2016
(43) Publication Date : 20/01/2017

(54) Title of the invention : BIO-FABRICATION OF ARTIFICIAL METACARPAL HUMAN THUMB BONE FOR IMPLANTATION

(51) International classification	:A61K 31/00	(71)**Name of Applicant :**
(31) Priority Document No	:NA	**1)Dr.S.BHARATHI RAJA**
(32) Priority Date	:NA	Address of Applicant :1/3, KUNDALAKESI STREET, MUTHAMIL NAGAR, THANJAVUR-613 007, TAMIL NADU, INDIA. Tamil Nadu India
(33) Name of priority country	:NA	
(86) International Application No	:NA	(72)**Name of Inventor :**
Filing Date	:NA	**1)Dr.S.BHARATHI RAJA**
(87) International Publication No	: NA	
(61) Patent of Addition to Application Number	:NA	
Filing Date	:NA	
(62) Divisional to Application Number	:NA	
Filing Date	:NA	

(57) Abstract :
Road accidents in India have become a regular event every day. It was reported by National Crime Records Bureau (NCRB) that 16 accident victims are dead in every one hour on an average in 2014. Maximum accidents and maximum deaths are reported from Tamil Nadu, India. On the other side, in non-fatal accidents, bone fracture or complete bone damage may happen in road accidents. Among the various types of fractures such as stable, open compound, transverse, oblique and comminuted fractures, comminuted fracture is the one where bone shatters in to three or more pieces. While for the other types of fractures, remedy is available, there is a need to explore a method to give rehabilitation for the victims of comminuted fracture. Hence, an attempt has been made in this research work to explore the possibilities of creating artificial metacarpal human thumb bone for the affected victims. Hence, a study on bio-compatible material has been made to best suit our human body such a way an affected person could lead a normal life. In this research work, combined Poly-Lactic Acid (PLA) and Acrylonitrile Butadiene Styrene (ABS) bio-materials are mixed in the ratio of 80% and 20% respectively to get the required properties to bio-fabricate artificial metacarpal human thumb bone. Fused Deposition Modeling (FDM), which is one of the additive manufacturing techniques, is used for bio-fabrication. Moreover, the plan of implantation has to be carried out as early as possible from the time of accident for the considered victim for the desired effects. So, in this research work, design, analysis and bio- fabrication of artificial metacarpal human thumb bone for implantation has been accomplished. The fallowings are expected to be the positive outcomes of the proposed research work: 1. POLY-LACTIC ACID [PLA) and ACRYLONITRILE BUTADIENE STYRENE (ABS) are the two bio-materials used in the ratio of 80% and 20% respectively, which are bio-compatible 2. Non-recoverable Comminuted bone fracture affected patients may be revamped by the proposed methodology. - 3. The proposed methodology shall take approximately 10 to 12 hours to bio-fabricate the artificial metacarpal human thumb bone, provided all the facilities are available within the premises, which will be an elixir to the affected persons. 4. Doctor himself can carry out the bio-fabrication process from design to end product, provided all the facilities are available within the premises. 5. Cell decaying due to delay in the present traditional method of treatment can be completely eliminated, if it is done within the prescribed hours. 6. Removal of organ due to delay in the present traditional method of treatment can be completely eliminated, if it is done within the prescribed hours. 7. Pain and stress of the affected patients may be for a day or two when compared to very long present method of traditional treatment

No. of Pages : 8 No. of Claims : 10

Publication After 18 Months:

The following Patent Applications have been published under Section 11A (3) of The Patents (Amendment) Act, 2005. Any Person may file representation by way of opposition to the Controller of Patents at the appropriate office against the grant of the patent in the prescribed manner under section 25(1) of the Patents (Amendment) Act, 2005 read with the rule 55 of The Patents (Amendment) Rules, 2006:

(12) PATENT APPLICATION PUBLICATION

(21) Application No.201614023093 A

(19) INDIA

(22) Date of filing of Application :05/07/2016

(43) Publication Date : 20/01/2017

(54) Title of the invention : CONDUCTOR RAIL SUSPENSION ON BEAMS

(51) International classification	:B61B3/00	(71)**Name of Applicant :**
(31) Priority Document No	:10 2015 111 584.0	**1)FURRER + FREY AG** Address of Applicant :Thunstrae 35, 3000 Bern 6, Switzerland, Switzerland
(32) Priority Date	:16/07/2015	(72)**Name of Inventor :**
(33) Name of priority country	:Germany	**1)FURRER, Beat**
(86) International Application No	:NA	**2)MLLER, Bernhard**
Filing Date	:NA	
(87) International Publication No	: NA	
(61) Patent of Addition to Application Number	:NA	
Filing Date	:NA	
(62) Divisional to Application Number	:NA	
Filing Date	:NA	

(57) Abstract :
The invention relates to an apparatus (2) for coupling a contact wire (4) to a support structure (16), comprising: - a base body having at least a first beam (49) and a second beam (50) which is coupled with the first beam (49) at the end face, - at least a first linking element (52) for coupling the base body to a suspension apparatus (74), which is adapted to support the base body on one of the support structures (16), and - at least a second linking element (52) for coupling a holding apparatus (12, 42) to the base body, which is adapted to hold the contact wire (4). (Fig. 1)

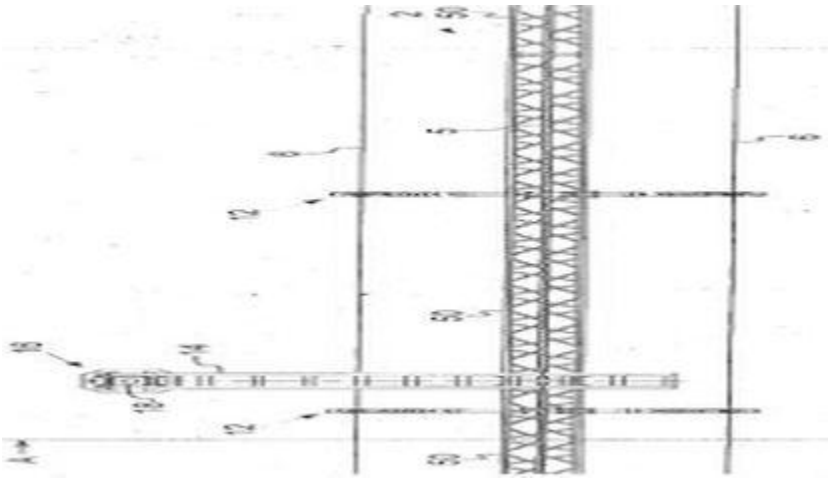

No. of Pages : 27 No. of Claims : 10

(12) PATENT APPLICATION PUBLICATION
(21) Application No.201614023326 A
(19) INDIA
(22) Date of filing of Application :07/07/2016
(43) Publication Date : 20/01/2017

(54) Title of the invention : CONDUCTOR RAIL SUSPENSION ON BEAMS

(51) International classification :B61B3/00
(31) Priority Document No :102015111592.1
(32) Priority Date :16/07/2015
(33) Name of priority country :Germany
(86) International Application No :NA
Filing Date :NA
(87) International Publication No : NA
(61) Patent of Addition to Application Number :NA
Filing Date :NA
(62) Divisional to Application Number :NA
Filing Date :NA

(71)**Name of Applicant :**
1)FURRER + FREY AG
Address of Applicant :Thunstrae 35, 3000 Bern 6, Switzerland Switzerland
(72)**Name of Inventor :**
1)FURRER, Beat
2)MLLER, Bernhard

(57) Abstract :
The invention relates to an apparatus (16) for holding a contact wire (74) on a linking apparatus (14) interconnecting at least two support structures (8), comprising - a hook (32) having a base body (58) on which are arranged a hook element (60) engageable to the linking apparatus (14) in an engaging direction (34) and a connection element (62) arranged below the hook (32) regarded in the engaging direction (34), and - a supporting arm (36) extending angularly to the engaging direction (34) and between two end points, for supporting the contact wire (74), - wherein the supporting arm (36) is fastened to the connection element (62) of the hook (32) between the end points. (Fig. 10)

No. of Pages : 26 No. of Claims : 10

(12) PATENT APPLICATION PUBLICATION
(21) Application No.201614023346 A
(19) INDIA
(22) Date of filing of Application :07/07/2016
(43) Publication Date : 20/01/2017

(54) Title of the invention : SIDE SILL PORTION STRUCTURE

(51) International classification :B62D25/20
(31) Priority Document No :2015-142094
(32) Priority Date :16/07/2015
(33) Name of priority country :Japan
(86) International Application No :NA
Filing Date :NA
(87) International Publication No : NA
(61) Patent of Addition to Application Number :NA
Filing Date :NA
(62) Divisional to Application Number :NA
Filing Date :NA

(71)**Name of Applicant :**
1)SUZUKI MOTOR CORPORATION
Address of Applicant :300, Takatsuka-cho, Minami-ku, Hamamatsu-shi, Shizuoka-ken, Japan Japan
(72)**Name of Inventor :**
1)Yoshitaka KURIAGE
2)Tomohiro TSURU

(57) Abstract :
To improve strength and rigidity of a side sill portion and reduce costs and weight without providing a reinforcement member and the like separately. [Solution] A structure of a side sill portion 3 includes a door lower rail 4 placed on an outer side of a side sill inner panel 32 with respect to a vehicle; a lower rail upper panel 5 located above the door lower rail 4 and provided with a vertical wall portion 51 in an inner side of the vehicle; and a lower rail lower panel 6 located below the door lower rail 4 and provided with a vertical wall portion 61 in the inner side of the vehicle, in which the lower rail upper panel 5 and the lower rail lower panel 6 are coupled together by joining together the vertical wall portions 51 and 61, wherein the flank 32a of the side sill inner panel 32 is coupled to the vertical wall portions 51 and 61 of the lower rail upper panel 5 and lower rail lower panel 6. [Selected Drawing] Figure 2

No. of Pages : 20 No. of Claims : 4

(12) PATENT APPLICATION PUBLICATION
(21) Application No.201614023419 A
(19) INDIA
(22) Date of filing of Application :08/07/2016
(43) Publication Date : 20/01/2017

(54) Title of the invention : A MERCURY REMOVAL APPARATUS, AN FLUE GAS TREATMENT SYSTEM, AND A METHOD OF REMOVING MERCURY

(51) International classification :G05B1/00
(31) Priority Document No :2015-139727
(32) Priority Date :13/07/2015
(33) Name of priority country :Japan
(86) International Application No :NA
Filing Date :NA
(87) International Publication No : NA
(61) Patent of Addition to Application Number :NA
Filing Date :NA
(62) Divisional to Application Number :NA
Filing Date :NA

(71)**Name of Applicant :**
1)Kabushiki Kaisha Toshiba
Address of Applicant :1-1, Shibaura 1-chome, Minato-ku, Tokyo, Japan Japan
(72)**Name of Inventor :**
1)Masaru OKAMOTO
2)Hideaki SHIMADA
3)Shinichi TERADA

(57) Abstract :
A mercury removal apparatus for removing the metal mercury in an flue gas containing the metal mercury and halogen, including an electro discharging device including a first electrode and a second electrode facing the first electrode, and activating the mercury by generating a streamer discharge, an oxidizing catalyst device provided at the downstream of the electro discharging device, to oxidize the mercury by reacting with halogen in the flue gas.

No. of Pages : 26 No. of Claims : 8

(12) PATENT APPLICATION PUBLICATION
(21) Application No.201614023511 A
(19) INDIA
(22) Date of filing of Application :08/07/2016
(43) Publication Date : 20/01/2017

(54) Title of the invention : PENETRATION-TYPED SCRIBING WHEEL WITH CHIP GROOVES IN AN AXLE HOLE THEREOF

(51) International classification :B28D5/00,
(31) Priority Document No :201510417096.6
(32) Priority Date :15/07/2015
(33) Name of priority country :China
(86) International Application No :NA
Filing Date :NA
(87) International Publication No : NA
(61) Patent of Addition to Application Number :NA
Filing Date :NA
(62) Divisional to Application Number :NA
Filing Date :NA

(71)**Name of Applicant :**
1)BEIJING WORLDIA DIAMOND TOOLS CO., LTD.
Address of Applicant :Room H-03, 5/F, 7-12 East, Factory building 7, Courtyard 1, Jiuxianqiao East Road, Chaoyang District, Beijing City, China. China
(72)**Name of Inventor :**
1)TANG, Wenlin

(57) Abstract :
The present invention relates to a penetration-typed scribing wheel for cutting glass, which is provided with chip grooves in an axle hole thereof. An object of the invention is to provide a penetration-typed scribing wheel that can remove the glass chippings between an axle hole wall and an axle of the penetration-typed scribing wheel. Chip grooves are set on the axle hole wall of the penetration-typed scribing wheel, and the chip grooves are in communication with a disc face (2) of the scribing wheel. For the penetration-typed scribing wheel with chip grooves in an axle hole thereof according to the invention, during the cutting of glass, glass chippings falling between the axle and the axle hole wall will be discharged from the scribing wheel along the chip grooves, thereby the phenomenon of fragment jam may be avoided.

No. of Pages : 27 No. of Claims : 11

(12) PATENT APPLICATION PUBLICATION
(21) Application No.201614021766 A
(19) INDIA
(22) Date of filing of Application :24/06/2016
(43) Publication Date : 20/01/2017

(54) Title of the invention : ILLUMINATED OPHTHALMIC INFUSION LINE AND ASSOCIATED DEVICES, SYSTEMS, AND METHODS

(51) International classification	:A61F9/007	(71)**Name of Applicant :**
(31) Priority Document No	:14/797, 763	**1)NOVARTIS AG**
(32) Priority Date	:13/07/2015	Address of Applicant :Lichtstrasse 35, 4056 Basel, Switzerland Switzerland
(33) Name of priority country	:U.S.A.	(72)**Name of Inventor :**
(86) International Application No	:NA	**1)THOMAS KERN**
Filing Date	:NA	
(87) International Publication No	: NA	
(61) Patent of Addition to Application Number	:NA	
Filing Date	:NA	
(62) Divisional to Application Number	:NA	
Filing Date	:NA	

(57) Abstract :
Systems, apparatuses, and methods of and for an ophthalmic illuminated infusion line are provided. An example ophthalmic illuminated infusion line may include an infusion arrangement having a first flexible elongate member and a flow tube. The first flexible elongate member may have a lumen configured to deliver a fluid to an eye of a patient during a surgical procedure. The flow tube may be sized to penetrate the eye of the patient and deliver the fluid to an interior of an eye to maintain intraocular pressure during a surgical procedure. The ophthalmic illuminated infusion line may also include an optical fiber coupled to the infusion arrangement and configured to penetrate the eye of the patient with the flow tube and transmit light to illuminate the interior of the eye during the surgical procedure at the same time that the flow tube delivers the fluid to the interior of the eye.

No. of Pages : 40 No. of Claims : 20

(12) PATENT APPLICATION PUBLICATION
(21) Application No.201614021780 A
(19) INDIA
(22) Date of filing of Application :24/06/2016
(43) Publication Date : 20/01/2017

(54) Title of the invention : PROTECTIVE CIRCUIT BREAKER

(51) International classification :H01H71/24
(31) Priority Document No :102015213240.4
(32) Priority Date :15/07/2015
(33) Name of priority country :Germany
(86) International Application No :NA
Filing Date :NA
(87) International Publication No : NA
(61) Patent of Addition to Application Number :NA
Filing Date :NA
(62) Divisional to Application Number :NA
Filing Date :NA

(71)**Name of Applicant :**
1)SIEMENS AKTIENGESELLSCHAFT
Address of Applicant :Wittelsbacherplatz 2, 80333 M¼nchen, Germany Germany
(72)**Name of Inventor :**
1)KUPSCH, Alexander

(57) Abstract :
The invention relates to a protective circuit breaker (1) comprising a switch housing (2), comprising connection pieces (3, 4) on the rear side, comprising a switching contact which is arranged in the switch housing (2) and which is connected to the two connection pieces (3 or 4), comprising a converter housing which has a first passage opening and is inserted into a recess in the switch housing (2) and through which the second connection piece (4) runs, wherein a converter coil is arranged around the passage opening/the second connection piece (4), comprising a plate-like converter cover (5) which has a second passage opening (11) through which the second connection piece (4) extends such that it runs to the outside. In order to permit a simple voltage tap, it is proposed that the converter cover (5) has arranged on it: a) a first contact (10a) which bears against the second connection piece (4) at the converter cover (5) in the region of the passage opening (11), b) a second contact (10b) which is electrically connected to the first connection piece (3), and c) a third contact (10c) which is connected to the first or a second electronics system, and comprising an electrical connection (14) by way of which the third contact (10c) can be selectively connected to the first or second contact (10a or 10b). Figure 3

No. of Pages : 12 No. of Claims : 3

(12) PATENT APPLICATION PUBLICATION
(21) Application No.201614021815 A
(19) INDIA
(22) Date of filing of Application :24/06/2016
(43) Publication Date : 20/01/2017

(54) Title of the invention : PROCESS FOR PREPARING HYDROPHOBICALLY MODIFIED ALKYLENE OXIDE URETHANE POLYMER

(51) International classification :C08G18/12
(31) Priority Document No :62/192,220
(32) Priority Date :14/07/2015
(33) Name of priority country :U.S.A.
(86) International Application No :NA
Filing Date :NA
(87) International Publication No : NA
(61) Patent of Addition to Application Number :NA
Filing Date :NA
(62) Divisional to Application Number :NA
Filing Date :NA

(71)**Name of Applicant :**
1)ROHM AND HAAS COMPANY
Address of Applicant :100 Independence Mall West, Philadelphia, PA 19106, UNITED STATES OF AMERICA U.S.A.
(72)**Name of Inventor :**
1)HAWKINS, Douglas R.
2)THOMPSON, Stephen D.
3)VAN DYK, Antony K.

(57) Abstract :
The present invention relates to a composition comprising an aqueous solution of a hydrophobically modified alkylene oxide urethane polymer (HEUR), a bismuth salt, and at least one sediment abating compound selected from the group consisting of citric acid or a salt thereof, gluconic acid or a salt thereof, and a salt of ethylenediamine tetraacetic acid. The composition with the specific sediment abating compounds shows excellent abatement in sediment and color formation in heat age testing of the solution.

No. of Pages : 10 No. of Claims : 10

(12) PATENT APPLICATION PUBLICATION
(19) INDIA
(22) Date of filing of Application :24/06/2016
(21) Application No.201614021816 A
(43) Publication Date : 20/01/2017

(54) Title of the invention : TORQUE CONVERTER CLUTCH RELEASE FLUID LUBRICATION

(51) International classification :F16H57/04,
(31) Priority Document No :14/799,233
(32) Priority Date :14/07/2015
(33) Name of priority country :U.S.A.
(86) International Application No :NA
Filing Date :NA
(87) International Publication No : NA
(61) Patent of Addition to Application Number :NA
Filing Date :NA
(62) Divisional to Application Number :NA
Filing Date :NA

(71)**Name of Applicant :**
1)GM Global Technology Operations LLC
Address of Applicant :300 Renaissance Center, Mail Code 482-C23-B21 Detroit, Michigan 48265-3000, UNITED STATES OF AMERICA U.S.A.
(72)**Name of Inventor :**
1)DAVID J. VARDA
2)JAMES D. HENDRICKSON
3)STEVEN P. MOORMAN

(57) Abstract :
A torque converter clutch (TCC) release fluid lubrication system for a motor vehicle transmission includes a first fluid line, a second fluid line and a third fluid line. The first fluid line supplies TCC apply fluid to the TCC. The second fluid line receives TCC release fluid from the TCC. And the third fluid line supplies a first lubrication fluid to the transmission. The TCC release fluid and the first lubrication fluid combine into a second lubrication fluid that is fed into the transmission.

No. of Pages : 12 No. of Claims : 10

(12) PATENT APPLICATION PUBLICATION
(21) Application No.201614023779 A
(19) INDIA
(22) Date of filing of Application :12/07/2016
(43) Publication Date : 20/01/2017

(54) Title of the invention : METHOD AND MACHINE FOR PRODUCING A WOVEN STRUCTURE

(51) International classification :D04H1/46
(31) Priority Document No :15 56657
(32) Priority Date :13/07/2015
(33) Name of priority country :France
(86) International Application No :NA
Filing Date :NA
(87) International Publication No : NA
(61) Patent of Addition to Application Number :NA
Filing Date :NA
(62) Divisional to Application Number :NA
Filing Date :NA

(71)**Name of Applicant :**
1)ETS A. DESCHAMPS ET FILS
Address of Applicant :Usine BOURISSON- BP N°20 16400, LA COURONNE - FRANCE France
(72)**Name of Inventor :**
1)DESCHAMPS Georges-Paul

(57) Abstract :
The invention relates to a method for producing a woven structure comprising at least one woven wall, wherein the following steps are carried out: a) weaving at least one first portion of said woven structure, said first portion comprising warp threads and weft threads intertwined according to the fundamental weave of each portion of woven wall corresponding to this first portion, b) stopping the introduction of the weft threads after the insertion of a weft thread associated with the positioning of at least one elongated element in said woven structure, with this weft thread being intertwined with the warp threads of each portion of woven wall according to the fundamental weave of said portion of wall, c) said at least one elongated element having a main axis, introducing each elongated element between the warp threads defining with the associated said weft thread, the position of insertion of this elongated element into the woven structure, with the main axis of said elongated element cutting the plane passing through the warp threads of each portion of wall into which it is introduced, d) maintaining in position each elongated element and introducing at least one new weft thread intertwining the warp threads of said woven structure according to said fundamental weave of each portion of wall or according to at least one new weave, in order to resume the production of said woven structure, with each elongated element not being taken in said woven structure.

No. of Pages : 27 No. of Claims : 27

(12) PATENT APPLICATION PUBLICATION
(19) INDIA
(22) Date of filing of Application :12/07/2016
(21) Application No.201614023821 A
(43) Publication Date : 20/01/2017

(54) Title of the invention : FEEDING ASSEMBLY TO DOSE TABLETS IN CAPSULES

(51) International classification :B65B39/00
(31) Priority Document No :102015000033988
(32) Priority Date :14/07/2015
(33) Name of priority country :Italy
(86) International Application No :NA
Filing Date :NA
(87) International Publication No : NA
(61) Patent of Addition to Application Number :NA
Filing Date :NA
(62) Divisional to Application Number :NA
Filing Date :NA

(71)**Name of Applicant :**
1)MG 2 S.r.l
Address of Applicant :Via del Savena, 18-Localita, Pian di Macina, 40065 PIANORO, ITALY Italy
(72)**Name of Inventor :**
1)Davide FRABETTI

(57) Abstract :
In a feeding assembly to dose tablets (2) in capsules (3), each capsule (3) is arranged at the outlet of a feeding channel (40), which, at its inlet, receives a given quantity of tablets (2) delivered by a rotating distribution platen (8) provided with at least one group (12) of dosing holes (13) which are normally closed by a closing plate (24), which is angularly integral with the distribution platen (8), and is mobile between a closing position and an opening position of the dosing holes (13). Figure 1

No. of Pages : 27 No. of Claims : 17

(12) PATENT APPLICATION PUBLICATION
(19) INDIA
(22) Date of filing of Application :12/07/2016
(21) Application No.201614023849 A
(43) Publication Date : 20/01/2017

(54) Title of the invention : LIGHTING APPARATUS

(51) International classification	:C09K11/61
(31) Priority Document No	:10-2015-0101554
(32) Priority Date	:17/07/2015
(33) Name of priority country	:Republic of Korea
(86) International Application No	:NA
Filing Date	:NA
(87) International Publication No	: NA
(61) Patent of Addition to Application Number	:NA
Filing Date	:NA
(62) Divisional to Application Number	:NA
Filing Date	:NA

(71)**Name of Applicant :**
1)SILICON WORKS CO., LTD.
Address of Applicant :222, Techno2-ro, Yuseong-gu, Daejeon 34027, Republic of Korea Republic of Korea
(72)**Name of Inventor :**
1)KIM Yong Geun

(57) Abstract :
The present invention discloses a lighting apparatus using an LED as a light source, and the lighting apparatus includes a monitoring unit configured to monitor whether a rectified voltage transitions to an over-voltage having a preset level and provide a monitoring result; and a regulator configured to perform current regulation on the current path according to the monitoring result corresponding to the rectified voltage.

No. of Pages : 51 No. of Claims : 19

(12) PATENT APPLICATION PUBLICATION
(21) Application No.201614023888 A
(19) INDIA
(22) Date of filing of Application :12/07/2016
(43) Publication Date : 20/01/2017

(54) Title of the invention : VEHICLE SEAT

(51) International classification :G06F7/00
(31) Priority Document No :2015-141213
(32) Priority Date :15/07/2015
(33) Name of priority country :Japan
(86) International Application No :NA
Filing Date :NA
(87) International Publication No : NA
(61) Patent of Addition to Application Number :NA
Filing Date :NA
(62) Divisional to Application Number :NA
Filing Date :NA

(71)**Name of Applicant :**
1)TOYOTA BOSHOKU KABUSHIKI KAISHA
Address of Applicant :1-1, Toyoda-cho, Kariya-shi, Aichi-ken, 448-8651, Japan Japan
(72)**Name of Inventor :**
1)HIRANO, Tomohiro
2)SAITO, Takao
3)SAKURAI, Teruhisa
4)TANIGUCHI, Takashi
5)MURAMATSU, Tomohiro
6)AWATA, Shinji

(57) Abstract :
A vehicle seat (1) in which a seatback (2) is connected to a base frame (3F1) on a vehicle body includes a connecting frame that is integrated with a frame of the seatback (2) and is connected to the base frame (3F1); and a positioning member that is provided on one of the connecting frame or the base frame (3F1) and positions connecting positions of both by abutting against the other.

No. of Pages : 36 No. of Claims : 9

(12) PATENT APPLICATION PUBLICATION
(21) Application No.201614023991 A
(19) INDIA
(22) Date of filing of Application :13/07/2016
(43) Publication Date : 20/01/2017

(54) Title of the invention : METHOD FOR PRODUCING A SURGE ARRESTER, APPARATUS FOR CARRYING OUT THE METHOD, AND SURGE ARRESTER PRODUCED IN ACCORDANCE WITH THE METHOD

(51) International classification :H05K13/00,
(31) Priority Document No :102015009045.3
(32) Priority Date :13/07/2015
(33) Name of priority country :Germany
(86) International Application No :NA
Filing Date :NA
(87) International Publication No : NA
(61) Patent of Addition to Application Number :NA
Filing Date :NA
(62) Divisional to Application Number :NA
Filing Date :NA

(71)**Name of Applicant :**
1)Tridelta Meidensha GMBH
Address of Applicant :Marie-Curie-Str.3 07629 Hermsdorf, Germany Germany
(72)**Name of Inventor :**
1)Torsten H–LZER
2)Karsten LAUE
3)Stephan HILMER

(57) Abstract :
The invention relates to a method for producing a surge arrester, comprising the steps of: providing a module 1 comprising one or more varistor blocks 3 and two end armatures 5; introducing the module 1 into a mould 7 in order to form a housing 21; evacuating the mould 7 in a vacuum chamber 9; introducing liquid silicone 11 into the evacuated mould 7 in the vacuum chamber 9; baking the mould 7 in order to crosslink the silicone 11; and removing the surge arrester from the mould 7. Fig. 1.

No. of Pages : 13 No. of Claims : 9

(12) PATENT APPLICATION PUBLICATION
(19) INDIA
(22) Date of filing of Application :24/08/2016
(21) Application No.201617028795 A
(43) Publication Date : 20/01/2017

(54) Title of the invention : COIL ARRANGEMENT FOR SAMPLE MEASUREMENT WITH A SPATIALLY VARIABLE MAGNETIC FIELD

(51) International classification	:G01N27/74,B23Q16/00,G01N1/36
(31) Priority Document No	:20145267
(32) Priority Date	:21/03/2014
(33) Name of priority country	:Finland
(86) International Application No	:PCT/FI2015/050190
Filing Date	:20/03/2015
(87) International Publication No	:WO 2015/140411
(61) Patent of Addition to Application Number	:NA
Filing Date	:NA
(62) Divisional to Application Number	:NA
Filing Date	:NA

(71)**Name of Applicant :**
1)MAGNASENSE TECHNOLOGIES OY
Address of Applicant :Rajatorpantie 41 C FI 01640 Vantaa Finland
(72)**Name of Inventor :**
1)SAVONEN Markus

(57) Abstract :
A first invention relates to a measuring arrangement which includes a coil arrangement (11) arranged to create a magnetic field (B) in order to measure a sample (14) to be arranged in connection with it and electronics (13) connected to the coil arrangement for creating a magnetic field (B) using the coil arrangement. The coil arrangement includes at least one flat coil (12) the coil geometry of which is arranged to be changed in the direction (K) of the plane defined by the flat coil in order to create a spatially changing magnetic field for measuring the sample and the measuring arrangement (10) includes means (24) for changing the position of the sample and the coil arrangement relative to each other in order to change the magnetic field affecting the sample. In addition this invention also relates to a method for measuring a sample. A second invention relates to a disc or a plate with several hollow areas in which at least one sample can be placed. A third invention relates to a device aiming at affecting magnetic particles in the sample.

No. of Pages : 25 No. of Claims : 21

(12) PATENT APPLICATION PUBLICATION
(19) INDIA
(22) Date of filing of Application :24/08/2016
(21) Application No.201617028796 A
(43) Publication Date : 20/01/2017

(54) Title of the invention : MULTIPLE COLUMN CHROMATOGRAPHIC SYSTEM AND METHODS OF USE

(51) International classification :G01N30/00,G01N30/46,G01N30/78
(31) Priority Document No :61/938563
(32) Priority Date :11/02/2014
(33) Name of priority country :U.S.A.
(86) International Application No :PCT/US2015/015469
Filing Date :11/02/2015
(87) International Publication No :WO 2015/123335
(61) Patent of Addition to Application Number :NA
Filing Date :NA
(62) Divisional to Application Number :NA
Filing Date :NA

(71)**Name of Applicant :**
1)BCHI LABORTECHNIK AG
Address of Applicant :Meierseggstrasse 40 9230 Flawil Switzerland
(72)**Name of Inventor :**
1)GAITA Romulus
2)MENDOZA Washington
3)SAARI NORDHAUS Raaidah
4)ANDERSON James
5)GOLDE Melissa

(57) Abstract :
A chromatographic apparatus includes two chromatographic columns configured to perform chromatography. The apparatus further includes a primary valve disposed upstream of the first chromatographic column and the second chromatographic column. The primary valve selectively switches between a first position in which the pump is in fluid communication with a first path that includes the first chromatographic column and a second position in which the pump is in fluid communication with a second path that includes the second chromatographic column. The apparatus also includes a first and a second sample injection port associated with said first and second columns respectively and at least one detector. The apparatus is configured such that flow from the column in the selected path goes to said at least one detector without passing through the other column.

No. of Pages : 8 No. of Claims : 37

(12) PATENT APPLICATION PUBLICATION
(21) Application No.201617028813 A
(19) INDIA
(22) Date of filing of Application :24/08/2016
(43) Publication Date : 20/01/2017

(54) Title of the invention : METHOD FOR OPTIMIZING THE SWITCH ON TIME OF A CORIOLIS GYROSCOPE AND CORIOLIS GYROSCOPE SUITABLE THEREFOR

(51) International classification :G01C19/5726,G01C25/00
(31) Priority Document No :10 2014 003 640.5
(32) Priority Date :14/03/2014
(33) Name of priority country :Germany
(86) International Application No :PCT/EP2015/000151
Filing Date :27/01/2015
(87) International Publication No :WO 2015/135614
(61) Patent of Addition to Application Number :NA
Filing Date :NA
(62) Divisional to Application Number :NA
Filing Date :NA

(71)**Name of Applicant :**
1)NORTHROP GRUMMAN LITEF GMBH
Address of Applicant :Lrracher Str. 18 79115 Freiburg i. Br. Germany
(72)**Name of Inventor :**
1)GEIGER Wolfram

(57) Abstract :
00A method for optimizing the switch on time of a Coriolis gyroscope (1) having a mass system (100) which can be excited to an excitation oscillation of the Coriolis gyroscope (1) parallel to a first axis (x) wherein a deflection of the mass system on account of a Coriolis force along a second axis (y) which is provided perpendicular to the first axis (x) can be verified using an output signal from the Coriolis gyroscope comprises determining the amplitude (A) of the excitation oscillation of the Coriolis gyroscope at a defined time determining the output signal (S) from the Coriolis gyroscope at the defined time and generating a normalized output signal (S) from the Coriolis gyroscope by multiplying the determined output signal (S) by the quotient of the amplitude (A) of the excitation oscillation of the Coriolis gyroscope in the steady state and the determined amplitude (A).

No. of Pages : 14 No. of Claims : 9

(12) PATENT APPLICATION PUBLICATION
(21) Application No.201617028814 A
(19) INDIA
(22) Date of filing of Application :24/08/2016
(43) Publication Date : 20/01/2017

(54) Title of the invention : VEHICULAR AIR CONDITIONING DEVICE

(51) International classification :B60H1/00,B60H1/12,B60H1/32
(31) Priority Document No :2014035439
(32) Priority Date :26/02/2014
(33) Name of priority country :Japan
(86) International Application No:PCT/JP2015/000804
Filing Date :20/02/2015
(87) International Publication No :WO 2015/129216
(61) Patent of Addition to Application Number :NA
Filing Date :NA
(62) Divisional to Application Number :NA
Filing Date :NA

(71)**Name of Applicant :**
1)DENSO CORPORATION
Address of Applicant :1 1 Showa cho Kariya city Aichi 4488661 Japan
(72)**Name of Inventor :**
1)KYUTO Tatsurou

(57) Abstract :
A vehicular air conditioning device has within the interior of a rotary mode door a partitioning wall for partitioning the internal space of the rotary mode door into a plurality of space parts aligned in the axial direction of the rotational axis of the mode door (50) and a baffle part (71) in a first space part (61) among the plurality of space parts. During a bi level mode the baffle part (71) is arranged in a position that allows mixing of cold air from a cold airflow passage (14) and warm air from a warm airflow passage (15). During a foot mode or a foot/defroster mode the baffle part (71) is arranged so that the inflow of a cold airflow to the first space part (61) is suppressed and a warm airflow is led through the first space part (61) to a defroster opening (11). The upper/lower temperature difference in the discharged air can thereby be reduced in a vehicular air conditioning device in which a mode door area and an air mix area are integrated in an air conditioning case.

No. of Pages : 31 No. of Claims : 9

(12) PATENT APPLICATION PUBLICATION
(19) INDIA
(22) Date of filing of Application :23/08/2016
(21) Application No.201617028732 A
(43) Publication Date : 20/01/2017

(54) Title of the invention : METHOD AND SYSTEM FOR IMPROVING SIZE BASED PRODUCT RECOMMENDATIONS USING AGGREGATED REVIEW DATA

(51) International classification :G06Q30/02
(31) Priority Document No :61/943606
(32) Priority Date :24/02/2014
(33) Name of priority country :U.S.A.
(86) International Application No :PCT/US2015/017215
Filing Date :24/02/2015
(87) International Publication No :WO 2015/127418
(61) Patent of Addition to Application Number :NA
Filing Date :NA
(62) Divisional to Application Number :NA
Filing Date :NA

(71)**Name of Applicant :**
1)AMAZON TECHNOLOGIES INC.
Address of Applicant :410 Terry Avenue North Seattle Washington 98109 U.S.A.
(72)**Name of Inventor :**
1)WILKINSON Matthew Tyler
2)END Nicholas B.
3)FRESEN Grant B.

(57) Abstract :
A recommendation system collects and aggregates customer feedback information to improve recommendations of wearable items to a consumer as well as provide manufacturers feedback related to their products. For example the recommendation system may provide a user of a product selection system with an automated recommendation of a recommended size for a selected wearable item. After the user has purchased the selected wearable item the system may present the user with a prompt to provide feedback relating to the item and/or a quality of the automated recommendation. When the system receives the feedback from the user and other consumers the system may aggregate the user feedback to improve an aspect of the recommended size of the selected wearable item in the future. Additionally the user s feedback or a collection of aggregated user feedback can be provided to the manufacturer of the purchased item.

No. of Pages : 38 No. of Claims : 23

(12) PATENT APPLICATION PUBLICATION
(21) Application No.201617028736 A
(19) INDIA
(22) Date of filing of Application :23/08/2016
(43) Publication Date : 20/01/2017

(54) Title of the invention : MULTICHANNEL ACCESS METHOD AND APPARATUS

(51) International classification :H04W74/08,H04W84/12
(31) Priority Document No :NA
(32) Priority Date :NA
(33) Name of priority country :NA
(86) International Application No :PCT/CN2014/073703
Filing Date :19/03/2014
(87) International Publication No :WO 2015/139236
(61) Patent of Addition to Application Number :NA
Filing Date :NA
(62) Divisional to Application Number :NA
Filing Date :NA

(71)**Name of Applicant :**
1)HUAWEI TECHNOLOGIES CO. LTD.
Address of Applicant :Huawei Administration Building Bantian Longgang District Shenzhen Guangdong 518129 China
(72)**Name of Inventor :**
1)LI Yunbo
2)LUO Yi
3)LOC Peter

(57) Abstract :
The embodiments of the present invention relate to a multichannel access method and apparatus. A first apparatus performs data transmission with a second apparatus on a first reserved channel. The method comprises: the first apparatus identifying whether or not a non reserved channel except the first reserved channel is in an idle state; if the non reserved channel is in an idle state the first apparatus triggering a fallback procedure; when the fallback procedure ends the first apparatus sending on the non reserved channel a channel reserved frame for allowing the first apparatus to regard the non reserved channel as a second reserved channel; and the first apparatus performing data transmission with the second apparatus on the first reserved channel and the second reserved channel.

No. of Pages : 29 No. of Claims : 21

(12) PATENT APPLICATION PUBLICATION
(21) Application No.201617028749 A
(19) INDIA
(22) Date of filing of Application :24/08/2016
(43) Publication Date : 20/01/2017

(54) Title of the invention : ADJUVANT CONTAINING BAICALIN PARTICULARLY FROM A *SCUTELLARIA BAICALENSIS* EXTRACT AND ANIMAL FEED CONTAINING SUCH AN ADJUVANT

(51) International classification :A23K1/16,A61K36/539
(31) Priority Document No :1451501
(32) Priority Date :25/02/2014
(33) Name of priority country :France
(86) International Application No :PCT/FR2015/050450
Filing Date :25/02/2015
(87) International Publication No :WO 2015/128580
(61) Patent of Addition to Application Number :NA
Filing Date :NA
(62) Divisional to Application Number :NA
Filing Date :NA

(71)**Name of Applicant :**
1)DELTAVIT
Address of Applicant :Quartier du Haut Bois ZA du Bois de Teillay F 35150 Janze France
(72)**Name of Inventor :**
1)ROBERT Fabrice

(57) Abstract :
The invention relates to a nutritional adjuvant comprising baicalin and/or baicalein diluted on a medium and to a feed comprising such an adjuvant for improving production performance in farm animals in stressful situations.

No. of Pages : 24 No. of Claims : 12

(12) PATENT APPLICATION PUBLICATION
(19) INDIA
(22) Date of filing of Application :24/08/2016
(21) Application No.201617028752 A
(43) Publication Date : 20/01/2017

(54) Title of the invention : SOLID FORMS OF AN ION CHANNEL MODULATOR

(51) International classification :C07D413/06,A61K31/553,A61P9/00
(31) Priority Document No :61/939640
(32) Priority Date :13/02/2014
(33) Name of priority country :U.S.A.
(86) International Application No :PCT/US2015/015652
Filing Date :12/02/2015
(87) International Publication No :WO 2015/123434
(61) Patent of Addition to Application Number :NA
Filing Date :NA
(62) Divisional to Application Number :NA
Filing Date :NA

(71)**Name of Applicant :**
1)GILEAD SCIENCES INC.
Address of Applicant :333 Lakeside Drive Foster City CA 94404 U.S.A.
(72)**Name of Inventor :**
1)CHIU Anna
2)LAPINA Olga V.
3)VLAHOVA Petinka I.

(57) Abstract :
Crystalline solid forms of the selective late sodium current inhibitor 4 (pyrimidin 2 ylmethyl) 7 (4 (trifluoromethoxy)phenyl) 3 4 dihydrobenzo[f][l 4]oxazepin 5(2H) one (Compound I) were prepared and characterized in the solid state: Also provided are processes of manufacture and methods of using the crystalline forms.

No. of Pages : 60 No. of Claims : 39

(12) PATENT APPLICATION PUBLICATION
(21) Application No.201617028757 A
(19) INDIA
(22) Date of filing of Application :24/08/2016
(43) Publication Date : 20/01/2017

(54) Title of the invention : METHOD FOR CONTINUOUSLY PRODUCING KETOMALONIC ACID COMPOUND USING FLOW REACTOR

(51) International classification	:C07C67/313,C07C67/31,C07C69/675
(31) Priority Document No	:2014027231
(32) Priority Date	:17/02/2014
(33) Name of priority country	:Japan
(86) International Application No	:PCT/JP2015/053334
Filing Date	:06/02/2015
(87) International Publication No	:WO 2015/122361
(61) Patent of Addition to Application Number	:NA
Filing Date	:NA
(62) Divisional to Application Number	:NA
Filing Date	:NA

(71)**Name of Applicant :**
1)IHARA CHEMICAL INDUSTRY CO. LTD.
Address of Applicant :4 26 Ikenohata 1 chome Taito ku Tokyo 1100008 Japan
(72)**Name of Inventor :**
1)TANI Shinki

(57) Abstract :
The purpose of the present invention is to provide a method for continuously producing a ketomalonic acid compound such as a ketomalonic acid diester or a hydrate thereof which is an industrially useful compound on an industrial scale and in a safe and steady manner. The present invention relates to: a method in which a malonic acid diester a carboxylic acid compound and a chlorous acid compound are used as raw material compounds and these raw material compounds are mixed together to prepare a mixture and the mixture is supplied to a flow reactor continuously thereby continuously producing a corresponding ketomalonic acid diester or a hydrate thereof; and a continuous production apparatus for performing the method.

No. of Pages : 110 No. of Claims : 21

(12) PATENT APPLICATION PUBLICATION
(19) INDIA
(22) Date of filing of Application :24/08/2016
(21) Application No.201617028845 A
(43) Publication Date : 20/01/2017

(54) Title of the invention : LIGHT INDUCED FREE RADICAL AND/OR CATIONIC PHOTOPOLYMERIZATION METHOD

(51) International classification :C08F2/50,C08G59/68,C08F122/10
(31) Priority Document No :14158217.1
(32) Priority Date :06/03/2014
(33) Name of priority country :EPO
(86) International Application No :PCT/EP2015/054501
Filing Date :04/03/2015
(87) International Publication No :WO 2015/132295
(61) Patent of Addition to Application Number :NA
Filing Date :NA
(62) Divisional to Application Number :NA
Filing Date :NA

(71)**Name of Applicant :**
1)UNIVERSIT‰ DE HAUTE ALSACE
Address of Applicant :2 rue des Fr¨res Lumi¨re 68093 Mulhouse Cedex France
2)CENTRE NATIONAL DE LA RECHERCHE SCIENTIFIQUE CNRS
3)UNIVERSIT‰ DAIX MARSEILLE
(72)**Name of Inventor :**
1)LALEV‰E Jacques
2)XIAO Pu
3)GIGMES Didier
4)DUMUR Frdric

(57) Abstract :
The present invention relates to a new method of light induced photopolymerization under mild irradiation conditions copper initiator complexes to be used in such method and a polymers obtained by such method.

No. of Pages : 42 No. of Claims : 17

(12) PATENT APPLICATION PUBLICATION
(19) INDIA
(22) Date of filing of Application :24/08/2016
(21) Application No.201617028846 A
(43) Publication Date : 20/01/2017

(54) Title of the invention : ANNULAR TURBINE ENGINE COMBUSTION CHAMBER

(51) International classification :F23R3/00,F23R3/52,F23R3/60
(31) Priority Document No :1451321
(32) Priority Date :19/02/2014
(33) Name of priority country :France
(86) International Application No :PCT/FR2015/050179
Filing Date :27/01/2015
(87) International Publication No :WO 2015/124840
(61) Patent of Addition to Application Number :NA
Filing Date :NA
(62) Divisional to Application Number :NA
Filing Date :NA

(71)**Name of Applicant :**
1)SAFRAN HELICOPTER ENGINES
Address of Applicant :F 64510 Bordes France
(72)**Name of Inventor :**
1)SAVARY Nicolas
2)BERTEAU Patrick
3)CARRERE Bernard
4)DUBOURDIEU Jean Marc
5)NAUDOT Ludovic

(57) Abstract :
The invention relates to an annular turbine engine combustion chamber having an axial direction (X) a radial direction and an azimuthal direction. Said chamber includes a first annular wall (12) and a second annular wall (14). Each wall defines at least part of the enclosure of the annular combustion chamber. The first and second walls (12 14) have complementary interlocking elements (12d 14d). The first wall (12) has at least one first through hole (12f) while the second wall (14) has at least one second through hole (14f). The combustion chamber also includes at least one pin inserted into a pair of holes that include a first hole (12f) and a second hole (14f). Said pin (18) is formed by an injector and securely interlocks the first and second walls (12 14).

No. of Pages : 13 No. of Claims : 9

(12) PATENT APPLICATION PUBLICATION
(21) Application No.201617028853 A
(19) INDIA
(22) Date of filing of Application :24/08/2016
(43) Publication Date : 20/01/2017

(54) Title of the invention : DEVICE FOR CONNECTING A STRUCTURAL ELEMENT WITH A HOLDING ELEMENT SPACED APART

(51) International classification :F16B5/01,F16B5/02
(31) Priority Document No :A 50167/2014
(32) Priority Date :07/03/2014
(33) Name of priority country :Austria
(86) International Application No :PCT/AT2015/050060
Filing Date :06/03/2015
(87) International Publication No :WO 2015/131218
(61) Patent of Addition to Application Number :NA
Filing Date :NA
(62) Divisional to Application Number :NA
Filing Date :NA

(71)**Name of Applicant :**
1)FACC AG
Address of Applicant :Fischerstrae 9 A 4910 Ried im Innkreis Austria
(72)**Name of Inventor :**
1)HASELBERGER Christoph
2)KAMMERER Bernhard

(57) Abstract :
Device (4) for spaced apart connection of a structural element (1) in particular made from a fiber reinforced plastic composite material with a holding element (5) by means of a connection screw (7) with a distance compensation element (8) having a longitudinal bore (9) for the passage of the connection screw (7) and with an entraining element (16) arranged in the longitudinal bore (9) which can be connected to the connection screw (7) by means of a friction fit so that the distance compensation element (8) can be transferred into an abutment position bridging the distance between the structural element (1) and the holding element (5) by screwing in of the connection screw (7) wherein the distance compensation element (8) is connected to an insertion part (11) via a screw connection (10) which part comprises a fastening section (12) that can be arranged within the structural element (1) for bonding with the structural element (1).

No. of Pages : 10 No. of Claims : 17

(12) PATENT APPLICATION PUBLICATION
(21) Application No.201617028854 A
(19) INDIA
(22) Date of filing of Application :24/08/2016
(43) Publication Date : 20/01/2017

(54) Title of the invention : MEDICATION STORAGE CELL STRIP PACKAGING BODY AND METHOD FOR MANUFACTURING MEDICATION STORAGE CELL

(51) International classification :B65D75/28,A61J1/03
(31) Priority Document No :PCT/JP2014/051918
(32) Priority Date :29/01/2014
(33) Name of priority country :Japan
(86) International Application No :PCT/JP2015/052400
Filing Date :28/01/2015
(87) International Publication No :WO 2015/115500
(61) Patent of Addition to Application Number :NA
Filing Date :NA
(62) Divisional to Application Number :NA
Filing Date :NA

(71)**Name of Applicant :**
1)MORIMOTO PHARMA CO. LTD.
Address of Applicant :8 28 Mitejima 5 chome Nishiyodogawa ku Osaka shi Osaka 5550012 Japan
(72)**Name of Inventor :**
1)MORIMOTO Shuji
2)NOZAKI Masao

(57) Abstract :
To provide a medication storage cell that can be easily opened by a person who cannot dexterously move his or her fingertips. [Solution] A small medication storage cell (12) is provided with an accommodating section (20) and an interlocking piece (22). The accommodating section (20) has an outlet for a medication (100). The outlet (30) is formed using a sheet (60) provided with an interlocking piece and a cover sheet (62). The interlocking piece (22) has a base section (40) and a tip end section (42). At least a part of the base section (40) is separated from the surface of the accommodating section (20). The tip end section (42) is fastened to the accommodating section (20) in a bent state so that the cover sheet (62) and the sheet (60) provided with an interlocking piece close the outlet (30).

No. of Pages : 30 No. of Claims : 13

(12) PATENT APPLICATION PUBLICATION
(21) Application No.201617028855 A
(19) INDIA
(22) Date of filing of Application :24/08/2016
(43) Publication Date : 20/01/2017

(54) Title of the invention : CONTROL PARAMETER ADJUSTMENT DEVICE AND CONTROL PARAMETER ADJUSTMENT PROGRAM

(51) International classification :G05B11/36,G05B13/02
(31) Priority Document No :2014039851
(32) Priority Date :28/02/2014
(33) Name of priority country :Japan
(86) International Application No :PCT/JP2015/055195
Filing Date :24/02/2015
(87) International Publication No :WO 2015/129677
(61) Patent of Addition to Application Number :NA
Filing Date :NA
(62) Divisional to Application Number :NA
Filing Date :NA

(71)**Name of Applicant :**
1)KABUSHIKI KAISHA TOSHIBA
Address of Applicant :1 1 Shibaura 1 chome Minato ku Tokyo 1058001 Japan
(72)**Name of Inventor :**
1)NAMBA Ryo
2)YAMANAKA Osamu
3)YOKOKAWA Katsuya
4)SUGINO Toshiharu

(57) Abstract :
A control parameter adjustment device according to an embodiment of the present invention has an acquisition unit and a derivation unit. In order to make a control variable for a control target coincide with a desired value the acquisition unit acquires from a control unit that performs feedback control that adjusts a control input that is given to the control target the control variable the desired value the control input and time series data for measurable disturbance. On the basis of the time series data acquired by the acquisition unit the derivation unit derives at least proportional gain and integral gain for the feedback control such that a transfer function for a closed loop from the disturbance to the control variable matches a disturbance reference model that incorporates the inverse of integral gain.

No. of Pages : 22 No. of Claims : 8

(12) PATENT APPLICATION PUBLICATION
(21) Application No.201617029035 A
(19) INDIA
(22) Date of filing of Application :26/08/2016
(43) Publication Date : 20/01/2017

(54) Title of the invention : COMPOSITION OF ADDITIVES AND PERFORMANCE FUEL COMPRISING SUCH A COMPOSITION

(51) International classification :C10L1/14,C10L1/19,C10L1/222
(31) Priority Document No :1451438
(32) Priority Date :24/02/2014
(33) Name of priority country :France
(86) International Application No :PCT/EP2015/053326
Filing Date :17/02/2015
(87) International Publication No:WO 2015/124575
(61) Patent of Addition to Application Number :NA
Filing Date :NA
(62) Divisional to Application Number :NA
Filing Date :NA

(71)**Name of Applicant :**
1)TOTAL MARKETING SERVICES
Address of Applicant :24 Cours Michelet F 92800 Puteaux France
(72)**Name of Inventor :**
1)PAPIN Graldine
2)DUBOIS Thomas
3)GUEIT Julien

(57) Abstract :
The invention relates to a composition of additives for a fuel comprising at least one first additive comprising a derivative of a partial ester of polyols and a second additive comprising a quaternary ammonium salt. The first additive comprises at least 50 mass % of a compound A selected from cyclic or acyclic linear or branched saturated or unsaturated C4 to C36 monocarboxylic aliphatic hydrocarbon and polyol partial esters said partial esters being used individually or in a mixture. The invention also relates to a diesel fuel comprising such a composition and to the use of said fuel for limiting deposits in a diesel engine. The invention especially relates to the use of the fuel containing the composition of additives of the present invention in direct injection diesel engines.

No. of Pages : 57 No. of Claims : 34

(12) PATENT APPLICATION PUBLICATION
(19) INDIA
(22) Date of filing of Application :26/08/2016
(21) Application No.201617029038 A
(43) Publication Date : 20/01/2017

(54) Title of the invention : PROCESS FOR PRODUCING BTX FROM A C5 C12 HYDROCARBON MIXTURE

(51) International classification :C10G63/04,C10G69/08
(31) Priority Document No :14156600.0
(32) Priority Date :25/02/2014
(33) Name of priority country :EPO
(86) International Application No :PCT/EP2015/053808
Filing Date :24/02/2015
(87) International Publication No :WO 2015/128317
(61) Patent of Addition to Application Number :NA
Filing Date :NA
(62) Divisional to Application Number :NA
Filing Date :NA

(71)**Name of Applicant :**
1)SAUDI BASIC INDUSTRIES CORPORATION
Address of Applicant :P.O. Box 5101 11422 Riyadh Saudi Arabia
2)SABIC GLOBAL TECHNOLOGIES B.V.
(72)**Name of Inventor :**
1)WARD Andrew Mark
2)FICKEL Dustin
3)DAVIES Andrew

(57) Abstract :
The invention relates to a process for producing BTX comprising: (a) contacting a feedstream comprising C5-C12 hydrocarbons in the presence of hydrogen with a reforming catalyst to produce a reformed product stream, wherein the reforming catalyst comprises a hydrogenation metal and a support of an amorphous alumina, (b) contacting the reformed product stream in the presence of hydrogen with a hydrocracking catalyst to produce a hydrocracking product stream comprising BTX, wherein the hydro - cracking catalyst comprises a hydrogenation metal and a zeolite and (c) separating the BTX from the hydrocracking product stream, wherein the hydrocracking catalyst comprises 0.01 - 1 wt%, preferably 0.01 -0.5 wt%, of the hydrogenation metal in relation to the total catalyst weight and the zeolite has a pore size of 5-8 A and a silica (Si02) to alumina (AI203) molar ratio of 5-200, preferably 30-120, wherein step (b) or steps (a) and (b)_are performed at a temperature of 425-580 °C, a pressure of 300-5000 kPa gauge and a Weight Hourly Space Velocity of 0.1 -15 1 preferably 0.1 -lO h 1

No. of Pages : 15 No. of Claims : 14

(12) PATENT APPLICATION PUBLICATION
(19) INDIA
(22) Date of filing of Application :26/08/2016
(21) Application No.201617029043 A
(43) Publication Date : 20/01/2017

(54) Title of the invention : MONITORING INFLAMMATION STATUS

(51) International classification :G01N33/68
(31) Priority Document No :1403605.7
(32) Priority Date :28/02/2014
(33) Name of priority country :U.K.
(86) International Application No :PCT/GB2015/050602
Filing Date :02/03/2015
(87) International Publication No :WO 2015/128681
(61) Patent of Addition to Application Number :NA
Filing Date :NA
(62) Divisional to Application Number :NA
Filing Date :NA

(71)**Name of Applicant :**
1)MOLOGIC LIMITED
Address of Applicant :Bedford Technology Park Thurleigh Bedfordshire MK44 2YP U.K.
(72)**Name of Inventor :**
1)PAREKH Gita
2)DAVIS Paul

(57) Abstract :
Methods for monitoring inflammation status of a subject comprise determining levels of at least one neutrophil activation marker, or at least three markers, in urine samples taken from the subject at multiple time points, wherein increased levels of the at least one neutrophil activation marker, or at least one of the markers, in a urine sample are indicative of or predictive of an exacerbation of inflammation and/or wherein decreased levels of the at least one neutrophil activation marker, or at least one of the markers, in a urine sample following an increase are indicative or predictive of recovery from, or successful treatment of, an exacerbation of inflammation. Corresponding systems, test kits and computer programs are provided.

No. of Pages : 143 No. of Claims : 34

(12) PATENT APPLICATION PUBLICATION
(21) Application No.201617029053 A
(19) INDIA
(22) Date of filing of Application :26/08/2016
(43) Publication Date : 20/01/2017

(54) Title of the invention : SUPER LARGE SCALE PHOTON CAPTURE BIOREACTOR FOR WATER PURIFICATION AND OPERATION METHOD THEREFOR

(51) International classification :C02F9/14,C02F3/32
(31) Priority Document No :201410072754.8
(32) Priority Date :28/02/2014
(33) Name of priority country :China
(86) International Application No :PCT/CN2015/073453
Filing Date :28/02/2015
(87) International Publication No :WO 2015/127904
(61) Patent of Addition to Application Number :NA
Filing Date :NA
(62) Divisional to Application Number :NA
Filing Date :NA

(71)**Name of Applicant :**
1)PHOTON ECO CAPTURE PTY LTD.
Address of Applicant :Room 1510 Section 1 Building 1 1# Chuangye Street Dongxin Road Donghu New Technology Development Zone Wuhan Hubei 430070 China
(72)**Name of Inventor :**
1)HU James Y

(57) Abstract :
Provided is a super large scale photon capture bioreactor for water purification and aquaculture comprising a sealable stereoscopic construction space wherein in the stereoscopic construction space a circuitous water ditch (2) is provided on each respective plane layer the water ditch (2) of each layer is provided with a water inlet (12) and a water outlet (13) and a plurality of filtering units (4) are mounted at intervals in the water ditch (2) of each layer; specially selected plants (5) are float planted on the water surface of each filtering unit (4) and aquatic animals (6) and microorganisms (7) are provided underwater; plant growth illuminating lights (8) of an adjustable height are suspended above the float planted specially selected plants (5); a vane wheel (15) is mounted at the lower end of the water outlet (13) of the water ditch of an upper layer and the vane wheel (15) is connected to an electric generator (16); the water inlet of the water ditch (2) of the next layer is arranged below the vane wheel (15); and the water required to be purified first enters the water inlet (12) of the water ditch (2) of the topmost layer in the stereoscopic construction space. The photon capture bioreactor has a low operation energy consumption a small occupation area and a non pollution procedure and realizes a cleaning production.

No. of Pages : 15 No. of Claims : 10

(12) PATENT APPLICATION PUBLICATION
(19) INDIA
(22) Date of filing of Application :24/08/2016
(21) Application No.201617028857 A
(43) Publication Date : 20/01/2017

(54) Title of the invention : COMPOSITIONS AND METHODS FOR TREATING INTRACEREBRAL HEMORRHAGE

(51) International classification :A61K38/48,A61P7/04
(31) Priority Document No :61/931071
(32) Priority Date :24/01/2014
(33) Name of priority country :U.S.A.
(86) International Application No :PCT/IB2015/050313
Filing Date :15/01/2015
(87) International Publication No :WO 2015/110939
(61) Patent of Addition to Application Number :NA
Filing Date :NA
(62) Divisional to Application Number :NA
Filing Date :NA

(71)**Name of Applicant :**
1)PFIZER INC.
Address of Applicant :235 East 42nd Street New York New York 10017 U.S.A.
(72)**Name of Inventor :**
1)ARKIN Steven
2)FRUEBIS Joachim
3)CARR Marcus E.
4)HETT Sunita
5)JASUJA Reema
6)PITTMAN Debra D.

(57) Abstract :
The disclosure provides compositions and methods for treating or preventing intracerebral hemorrhage (ICH) in a subject by administering a variant of FXa.

No. of Pages : 44 No. of Claims : 36

(12) PATENT APPLICATION PUBLICATION
(19) INDIA
(22) Date of filing of Application :24/08/2016
(21) Application No.201617028859 A
(43) Publication Date : 20/01/2017

(54) Title of the invention : MACROCYCLIC FACTOR XIA INHIBITORS CONDENSED WITH HETEROCYCLES

(51) International classification :C07D471/18,C07D487/08,A61K31/439
(31) Priority Document No :61/933948
(32) Priority Date :31/01/2014
(33) Name of priority country :U.S.A.
(86) International Application No :PCT/US2015/013647
Filing Date :30/01/2015
(87) International Publication No :WO 2015/116882
(61) Patent of Addition to Application Number :NA
Filing Date :NA
(62) Divisional to Application Number :NA
Filing Date :NA

(71)**Name of Applicant :**
1)BRISTOL MYERS SQUIBB COMPANY
Address of Applicant :Route 206 and Province Line Road Princeton New Jersey 08543 U.S.A.
(72)**Name of Inventor :**
1)DILGER Andrew K.
2)CORTE James R.
3)DE LUCCA Indawati
4)FANG Tianan
5)YANG Wu
6)WANG Yufeng
7)PABBISETTY Kumar Balashanmuga
8)EWING William R.
9)ZHU Yeheng
10)WEXLER Ruth R.
11)PINTO Donald J.P.
12)ORWAT Michael J.
13)SMITH II Leon M.

(57) Abstract :
The present invention provides compounds of Formula (Ia): or stereoisomers tautomers or pharmaceutically acceptable salts thereof wherein all the variables are as defined herein. These compounds are selective factor XIa inhibitors or dual inhibitors of FXIa and plasma kallikrein. This invention also relates to pharmaceutical compositions comprising these compounds and methods of treating thromboembolic and/or inflammatory disorders using the same.

No. of Pages : 184 No. of Claims : 8

(12) PATENT APPLICATION PUBLICATION
(19) INDIA
(22) Date of filing of Application :24/08/2016
(21) Application No.201617028860 A
(43) Publication Date : 20/01/2017

(54) Title of the invention : QUINOLINE BASED KINASE INHIBITORS

(51) International classification :C07D401/14,C07D215/12,C07D215/18
(31) Priority Document No :61/934152
(32) Priority Date :31/01/2014
(33) Name of priority country :U.S.A.
(86) International Application No :PCT/US2015/012649
Filing Date :23/01/2015
(87) International Publication No :WO 2015/116492
(61) Patent of Addition to Application Number :NA
Filing Date :NA
(62) Divisional to Application Number :NA
Filing Date :NA

(71)**Name of Applicant :**
1)BRISTOL MYERS SQUIBB COMPANY
Address of Applicant :Route 206 and Province Line Road Princeton New Jersey 08543 U.S.A.
(72)**Name of Inventor :**
1)HARTZ Richard A.
2)AHUJA Vijay T.
3)MACOR John E.
4)BRONSON Joanne J.
5)DASGUPTA Bireshwar
6)DZIERBA Carolyn Diane
7)NARA Susheel Jethanand
8)KARATHOLUVHU Maheswaran Sivasamban

(57) Abstract :
The present disclosure is generally directed to compounds of formula (I) which can inhibit AAKI (adaptor associated kinase 1), compositions comprising such compounds, and methods for inhibiting AAKI.

No. of Pages : 116 No. of Claims : 10

(12) PATENT APPLICATION PUBLICATION
(19) INDIA
(22) Date of filing of Application :24/08/2016
(21) Application No.201617028868 A
(43) Publication Date : 20/01/2017

(54) Title of the invention : FUEL TANK LIQUID VAPOR DISCRIMINATOR WITH INTEGRATED OVER PRESSURE AND MAKE UP AIR VALVES

(51) International classification :F02M25/08,F02M37/00
(31) Priority Document No :61/943696
(32) Priority Date :24/02/2014
(33) Name of priority country :U.S.A.
(86) International Application No :PCT/US2015/017397
Filing Date :24/02/2015
(87) International Publication No :WO 2015/127477
(61) Patent of Addition to Application Number :NA
Filing Date :NA
(62) Divisional to Application Number :NA
Filing Date :NA

(71)**Name of Applicant :**
1)EATON CORPORATION
Address of Applicant :1000 Eaton Boulevard Cleveland Ohio 44122 U.S.A.
(72)**Name of Inventor :**
1)MILLS Vaughn Kevin
2)BHURKE Pritam
3)DINNI Ravikumar
4)GOUD Shivaprasad

(57) Abstract :
A valve assembly (23, 100) com prises a roll-over valve (50, 150) configured for fluid exchange through a float sleeve and through a orifice. A lower housing (82, 33, 180) is connected to the roll-over valve (50, 150) and comprises a fluid vent (330, 827, 15 1) connected to drain fluid by passing the fluid through the float sleeve. An upper housing (3 1, 81, 181) is sealed against the lower housing. The upper housing comprises a flu id pathway (30, 340, 819, 185), biases an over pressure seal towards the lower housing to block fluid flow between the fluid pathway and the fluid vent, and receives a make-up air valve. The make up seal is biased to block fluid flow between the fluid pathway and the fluid vent. A liquid trap (324, 815 170) connects the over-pressure relief valve and the make-up air valve to the fluid vent (330, 827, 151).

No. of Pages : 19 No. of Claims : 24

(12) PATENT APPLICATION PUBLICATION
(19) INDIA
(22) Date of filing of Application :24/08/2016
(21) Application No.201617028870 A
(43) Publication Date : 20/01/2017

(54) Title of the invention : ANTIBODY MOLECULES TO PD 1 AND USES THEREOF

(51) International classification :C07K16/28
(31) Priority Document No :61/931512
(32) Priority Date :24/01/2014
(33) Name of priority country :U.S.A.
(86) International Application No :PCT/US2015/012754
Filing Date :23/01/2015
(87) International Publication No :WO 2015/112900
(61) Patent of Addition to Application Number :NA
Filing Date :NA
(62) Divisional to Application Number :NA
Filing Date :NA

(71)**Name of Applicant :**
1)DANA FARBER CANCER INSTITUTE INC.
Address of Applicant :450 Brookline Avenue Boston MA 02215 5450 U.S.A.
2)NOVARTIS AG
3)PRESIDENT AND FELLOWS OF HARVARD COLLEGE
(72)**Name of Inventor :**
1)FREEMAN Gordon James
2)SHARPE Arlene Helen
3)BLATTLER Walter A.
4)MATARAZA Jennifer Marie
5)SABATOS PEYTON Catherine Anne
6)CHANG Hwai Wen
7)FREY Gerhard Johann

(57) Abstract :
Antibody molecules that specifically bind to PD 1 are disclosed. The anti PD 1 antibody molecules can be used to treat prevent and/or diagnose cancerous or infectious conditions and disorders.

No. of Pages : 280 No. of Claims : 116

(12) PATENT APPLICATION PUBLICATION
(19) INDIA
(22) Date of filing of Application :24/08/2016
(21) Application No.201617028871 A
(43) Publication Date : 20/01/2017

(54) Title of the invention : DESMODROMIC ENDOTHERMIC ROTARY ENGINE WITH EXTERNAL COMBUSTION CHAMBER AT VARIABLE VOLUME

(51) International classification :F01C1/32,F01C1/356,F02B53/04
(31) Priority Document No :1402860.9
(32) Priority Date :18/02/2014
(33) Name of priority country :U.K.
(86) International Application No :PCT/GB2015/000046
Filing Date :06/02/2015
(87) International Publication No :WO 2015/124894
(61) Patent of Addition to Application Number :NA
Filing Date :NA
(62) Divisional to Application Number :NA
Filing Date :NA

(71)**Name of Applicant :**
1)TULINO RESEARCH & PARTNERS LTD
Address of Applicant :Barclays Bank Chambers 11 48 Bridge Str Stratford upon Avon CV37 6AH Warwickshire U.K.
(72)**Name of Inventor :**
1)TULINO Rosario Rocco

(57) Abstract :
The endothermic rotary engine with external combustion chamber at variable volume subject of this invention has a piston with round section that rolls without brushing inside a cylinder of larger diameter and of equal length. The achievement of intake compression expansion and exhaust chambers is obtained by two cross mobile sliders of rectangular section that during the rotation slide on specific slots made on cylinder remaining in contact with the rotating piston. The cross mobile prisms movement obtained through a cinematic system located outside the cylinder and composed by an eccentric that moves two desmodromic tracks bound to the prisms.

No. of Pages : 9 No. of Claims : 18

(12) PATENT APPLICATION PUBLICATION
(19) INDIA
(22) Date of filing of Application :24/08/2016
(21) Application No.201617028878 A
(43) Publication Date : 20/01/2017

(54) Title of the invention : LIQUID COMPOSITION IN THE FORM OF EMULSION OR MICROEMULSION FOR RECTAL ADMINISTRATION CONTAINING AT LEAST ONE DYE AND ITS USE IN A DIAGNOSTIC ENDOSCOPIC PROCEDURE OF SIGMOID COLON AND/OR RECTUM

(51) International classification :A61K49/00,A61K9/00,A61K9/107
(31) Priority Document No :MI2014A000121
(32) Priority Date :29/01/2014
(33) Name of priority country :Italy
(86) International Application No :PCT/IB2015/050667
Filing Date :29/01/2015
(87) International Publication No :WO 2015/114548
(61) Patent of Addition to Application Number :NA
Filing Date :NA
(62) Divisional to Application Number :NA
Filing Date :NA

(71)**Name of Applicant :**
1)COSMO TECHNOLOGIES LIMITED
Address of Applicant :Riverside II Sir John Rogersons Quay Dublin 2 Ireland
(72)**Name of Inventor :**
1)MORO Luigi
2)FRIMONTI Enrico
3)LONGO Luigi Maria

(57) Abstract :
The present invention provides a novel liquid composition in the form of an emulsion or microemulsion for rectal ad ministration comprising at least one dye, at least one emulsiiier, and at least one physiologically acceptable excipient, and its use in a diagnostic endoscopic procedure of sigmoid colon and/or rectum. Preferably, said diagnostic endoscopic procedure of sigmoid colon and/or rectum is an anoscopy, a proctoscopy, a rectoscopy and/or a sigmoidoscopy.

No. of Pages : 56 No. of Claims : 22

(12) PATENT APPLICATION PUBLICATION
(19) INDIA
(22) Date of filing of Application :26/08/2016
(21) Application No.201617029216 A
(43) Publication Date : 20/01/2017

(54) Title of the invention : PHARMACEUTICAL COMPOSITION OF ROFLUMILAST

(51) International classification :A61K31/138,A61P11/06,A61K31/44
(31) Priority Document No :782/MUM/2014
(32) Priority Date :07/03/2014
(33) Name of priority country :India
(86) International Application No :PCT/IB2015/051513
Filing Date :02/03/2015
(87) International Publication No :WO 2015/132708
(61) Patent of Addition to Application Number :NA
Filing Date :NA
(62) Divisional to Application Number :NA
Filing Date :NA

(71)**Name of Applicant :**
1)TORRENT PHARMACEUTICALS LIMITED
Address of Applicant :Torrent House Off Ashram Road Gujarat Ahmedabad 380 009 Gujarat India
(72)**Name of Inventor :**
1)ABRAHAM Jaya
2)RAJHANS Sujay
3)BUCH Tapan

(57) Abstract :
Present invention relates to multiparticulate pharmaceutical composition having first inert component comprising one or more pharmaceutical excipients and at least one subsequent component comprising roflumilast wherein said first inert component is free of roflumilast. Invention also relates to process of preparation of said pharmaceutical composition and its use in the treatment of COPD.

No. of Pages : 23 No. of Claims : 10

(12) PATENT APPLICATION PUBLICATION
(21) Application No.201617029219 A
(19) INDIA
(22) Date of filing of Application :27/08/2016
(43) Publication Date : 20/01/2017

(54) Title of the invention : CENTRIFUGAL SCREEN ASSEMBLY

(51) International classification :B04B7/16
(31) Priority Document No :2014900595
(32) Priority Date :24/02/2014
(33) Name of priority country :Australia
(86) International Application No :PCT/AU2015/050070
Filing Date :24/02/2015
(87) International Publication No :WO 2015/123735
(61) Patent of Addition to Application Number :NA
Filing Date :NA
(62) Divisional to Application Number :NA
Filing Date :NA

(71)**Name of Applicant :**
1)WEIR MINERALS AUSTRALIA LTD
Address of Applicant :1 Marden Street Artarmon New South Wales 2064 Australia
(72)**Name of Inventor :**
1)TRENCH Michael

(57) Abstract :
A screen assembly (10) for a horizontal screen machine has a screen body (12) diverging axially from an inlet end (13). A base wall portion (15) mounts the screen body (12) for rotation and includes eight substantially radial webs (16). An annular wall portion (21) is located adjacent the inner end (13) and includes drain passages (24) adapted to drain discontinuities in a bonding layer comprising a moisture cure polyurethane sealant/adhesive overlying the annular wall portion (21). Wear resistant tungsten carbide elements (26) include a plurality of apertures (27) extending through a wear face to a bonding face. Voids (32) in the discontinuous bonding layer (31) provide fluid interconnection between the apertures (27) and the drain passages (24). A replaceable screen member (33) is releasably secured at an inner ring frame (22) and an outer ring frame (36) of the screen body (12).

No. of Pages : 19 No. of Claims : 51

(12) PATENT APPLICATION PUBLICATION
(19) INDIA
(22) Date of filing of Application :27/08/2016
(21) Application No.201617029232 A
(43) Publication Date : 20/01/2017

(54) Title of the invention : ROLLER TAPPET DEVICE AND METHOD FOR PRODUCING A ROLLER TAPPET DEVICE

(51) International classification :F02M59/10,F04B27/08,F04B1/04
(31) Priority Document No :10 2014 220 881.5
(32) Priority Date :15/10/2014
(33) Name of priority country :Germany
(86) International Application No :PCT/EP2015/059891
Filing Date :06/05/2015
(87) International Publication No :WO 2016/058712
(61) Patent of Addition to Application Number :NA
Filing Date :NA
(62) Divisional to Application Number :NA
Filing Date :NA

(71)**Name of Applicant :**
1)CONTINENTAL AUTOMOTIVE GMBH
Address of Applicant :Vahrenwalder Strae 9 30165 Hannover Germany
(72)**Name of Inventor :**
1)ROIDER Stefan
2)KIRSCHENHOFER Ludwig
3)HAUPT Detlef
4)KEMNA Christian
5)SCHMIDT Martin

(57) Abstract :
The invention relates to a roller tappet device (1) for a pump comprising a tappet (3) with a longitudinal axis (L) a tappet housing (5) with an inner lateral surface (26) a bearing shell (7) with an outer lateral surface (16) and a roller (9) with a rotational axis (D). The bearing shell (7) has a bearing shell recess (19) in which the roller (9) is rotatably mounted and the bearing shell (7) has a pin (11) on a face facing away from the bearing shell recess (19) said pin being received in a housing bearing (21) of the tappet housing (5). The bearing shell (7) is coupled to the tappet housing (5) in a fixed manner via an outer lateral surface (12) of the pin (11) and an inner lateral surface (22) of the housing bearing (21) and the roller (9) is supported on a drive device of the pump and is designed to transmit a force from the drive device to the tappet (3) via the bearing shell (7) along the longitudinal axis (L) during the operation of the pump.

No. of Pages : 14 No. of Claims : 8

(12) PATENT APPLICATION PUBLICATION
(21) Application No.201617029233 A
(19) INDIA
(22) Date of filing of Application :27/08/2016
(43) Publication Date : 20/01/2017

(54) Title of the invention : METHOD AND SYSTEM CONFIGURATION FOR RE DETERMINING THE LOCATION OF A RAIL VEHICLE

(51) International classification :B61L25/02,B61L23/34
(31) Priority Document No :102014206741.3
(32) Priority Date :08/04/2014
(33) Name of priority country :Germany
(86) International Application No :PCT/EP2015/055500
Filing Date :17/03/2015
(87) International Publication No :WO 2015/154950
(61) Patent of Addition to Application Number :NA
Filing Date :NA
(62) Divisional to Application Number :NA
Filing Date :NA

(71)**Name of Applicant :**
1)SIEMENS AKTIENGESELLSCHAFT
Address of Applicant :Wittelsbacherplatz 2 80333 M¼nchen Germany
(72)**Name of Inventor :**
1)KOHLRUSS Jacob Johannes

(57) Abstract :
The invention relates to a method for re determining the location of a first rail vehicle (1) whose locating function has failed and to a corresponding system configuration. The method permits rapid re determination of the location without deployment of personnel by providing the following steps: 1. Stopping the first rail vehicle (1) 2. Transmission of the failure information by the first rail vehicle (1) to a route monitoring device (12) 3. Transmission of the failure information by the route monitoring device (12) to a second rail vehicle (2) which follows the first rail vehicle (1) 4. Moving the second rail vehicle (2) close to the first rail vehicle (1) 5. Activating a distance sensor (7) of the second rail vehicle (2) and measuring the distance from the first rail vehicle (1 6. Stopping the second rail vehicle (2) at a position which is at a safe distance from the first rail vehicle (1) 7. Transmitting the position of the second rail vehicle (2) and its distance from the first rail vehicle (1) to the route monitoring device (12) and 8. Determination of the position data of the first rail vehicle (1) by the route monitoring device (12) from the data received in step 7.

No. of Pages : 7 No. of Claims : 4

(12) PATENT APPLICATION PUBLICATION
(19) INDIA
(22) Date of filing of Application :26/08/2016
(21) Application No.201617029057 A
(43) Publication Date : 20/01/2017

(54) Title of the invention : ASSISTED PARTICLE SIZE REDUCTION PROCESS

(51) International classification :A61K9/00,A61K9/14,A61K31/439
(31) Priority Document No :107433
(32) Priority Date :28/01/2014
(33) Name of priority country :Portugal
(86) International Application No :PCT/GB2015/050186
Filing Date :27/01/2015
(87) International Publication No :WO 2015/114320
(61) Patent of Addition to Application Number :NA
Filing Date :NA
(62) Divisional to Application Number :NA
Filing Date :NA

(71)**Name of Applicant :**
1)HOVIONE INTERNATIONAL LTD
Address of Applicant :Aubin House 11th Floor 171 172 Gloucester Road Wanchai Hong Kong China
(72)**Name of Inventor :**
1)COSTA Eunice
2)TEMTEM M¡rcio
3)SOBRAL Luis
4)CACELA Constan§a
5)VILLAX Peter

(57) Abstract :
A new scalable process to control the particle size and the particle size distribution comprising5 steps: (i) suspension preparation in a mixture of solvents in which the API and/or excipient is partially soluble in one of the solvents; (ii) particle size reduction of the suspension; (iii) aging; (iv)stopping the aging by solvent removal; and (v) optionally a step of isolating the processed ingredients in the form of powder.

No. of Pages : 16 No. of Claims : 32

(12) PATENT APPLICATION PUBLICATION
(19) INDIA
(22) Date of filing of Application :26/08/2016
(21) Application No.201617029063 A
(43) Publication Date : 20/01/2017

(54) Title of the invention : LOW CYTOTOXICITY SWITCHABLE ADHESIVE COMPOSITIONS MEDICAL DRESSINGS AND SKIN COVERINGS AND METHODS OF TREATMENT USING SAME

(51) International classification :C08F220/06,C08F220/10,C09J4/06
(31) Priority Document No :1404021.6
(32) Priority Date :05/03/2014
(33) Name of priority country :U.K.
(86) International Application No :PCT/GB2015/000079
Filing Date :05/03/2015
(87) International Publication No :WO 2015/132551
(61) Patent of Addition to Application Number :NA
Filing Date :NA
(62) Divisional to Application Number :NA
Filing Date :NA

(71)**Name of Applicant :**
1)LUMINA ADHESIVES AB
Address of Applicant :Varbergsgatan 2A S 412 65 Goteborg Sweden
(72)**Name of Inventor :**
1)TUNIUS Mats

(57) Abstract :
Low cytotoxicity compositions are disclosed, most particularly for use in adhesive medical products such as wound dressings (100) and medical skin coverings including surgical incision drapes, bacterial barriers without a wound pad for covering wounds and skin closure products. Methods of treatment are also disclosed that use the adhesive medical products, for example on patients with an injury or a long-term medical condition requiring repeated application of dressings, on patients undergoing surgery, on patients after surgery and/or injury requiring a skin covering, and skin closure methods.

No. of Pages : 58 No. of Claims : 56

(12) PATENT APPLICATION PUBLICATION
(19) INDIA
(22) Date of filing of Application :26/08/2016
(21) Application No.201617029064 A
(43) Publication Date : 20/01/2017

(54) Title of the invention : INK JET DELIVERY SYSTEM COMPRISING AN IMPROVED FLUID MIXTURE

(51) International classification :A61L9/12,A61L9/14
(31) Priority Document No :14/217524
(32) Priority Date :18/03/2014
(33) Name of priority country :U.S.A.
(86) International Application No :PCT/US2015/021221
Filing Date :18/03/2015
(87) International Publication No :WO 2015/143022
(61) Patent of Addition to Application Number :NA
Filing Date :NA
(62) Divisional to Application Number :NA
Filing Date :NA

(71)**Name of Applicant :**
1)THE PROCTER & GAMBLE COMPANY
Address of Applicant :One Procter & Gamble Plaza Cincinnati Ohio 45202 U.S.A.
(72)**Name of Inventor :**
1)GRUENBACHER Dana Paul
2)SHERMAN Faiz Feisal
3)BUSH Stephan Gary

(57) Abstract :
Ink jet delivery systems for a fluid composition comprising from about 50% to about 100%, by weight of the composition, of an active mixture. The active mixture having a vapor pressure less than about 2.3 kPa at 20 C. The composition also comprising about 0% to 50%, by weight, of a carrier volatile composition having a vapor pressure above about 2.3kPa at 20C and an ink jet head for delivering the fluid composition into theai

No. of Pages : 14 No. of Claims : 5

(12) PATENT APPLICATION PUBLICATION
(21) Application No.201617029065 A
(19) INDIA
(22) Date of filing of Application :26/08/2016
(43) Publication Date : 20/01/2017

(54) Title of the invention : INDUCTIVE POWER TRANSFER PAD SYSTEM FOR INDUCTIVE POWER TRANSFER AND METHOD OF OPERATING AN INDUCTIVE POWER TRANSFER PAD

(51) International classification :B60L11/18,H02J5/00,H02J7/02
(31) Priority Document No :1403547.1
(32) Priority Date :28/02/2014
(33) Name of priority country :U.K.
(86) International Application No :PCT/EP2015/054106
Filing Date :27/02/2015
(87) International Publication No :WO 2015/128450
(61) Patent of Addition to Application Number :NA
Filing Date :NA
(62) Divisional to Application Number :NA
Filing Date :NA

(71)**Name of Applicant :**
1)BOMBARDIER PRIMOVE GMBH
Address of Applicant :Schneberger Ufer 1 10785 Berlin Germany
(72)**Name of Inventor :**
1)WECHSLER Simon
2)ANDERS Dominik

(57) Abstract :
The invention relates to an inductive power transfer pad in particular a power transfer pad (1) of a system for inductive power transfer to a vehicle comprising a stationary part (2) and a movable part (3) wherein the movable part (3) comprises a primary winding structure wherein the movable part (3) is movable between a retracted state and an extended state wherein the power transfer pad (1) is designed and/or controllable such that the movable part (3) is only movable to a position from a set of predetermined positions wherein the set of predetermined positions is a subset of the set of all positions between the retracted and the extended state. The invention further relates to a method of operating an inductive power transfer pad and an inductive power transfer system.

No. of Pages : 28 No. of Claims : 21

(12) PATENT APPLICATION PUBLICATION
(21) Application No.201617029071 A
(19) INDIA
(22) Date of filing of Application :26/08/2016
(43) Publication Date : 20/01/2017

(54) Title of the invention : INTERNAL MATERIAL SYSTEM FOR FACILITATING MATERIAL AND ASSET MOVEMENT WITHIN ORGANIZATIONAL INFRASTRUCTURES

(51) International classification :G06Q10/10,G06Q10/06
(31) Priority Document No :na
(32) Priority Date : -
(33) Name of priority country :
(86) International Application No :PCT/US2014/015373
Filing Date :07/02/2014
(87) International Publication No :WO 2015/119622
(61) Patent of Addition to Application Number :NA
Filing Date :NA
(62) Divisional to Application Number :NA
Filing Date :NA

(71)**Name of Applicant :**
1)TSN LLC
Address of Applicant :225 PEACHTREE STREET, SUITE 1945, ATLANTA, GEORGIA 30303 UNITED STATES OF AMERICA U.S.A.
(72)**Name of Inventor :**
1)GLUSTROM Robert
2)SCHAFER Richard

(57) Abstract :
Utilities that allow organizations to implement best practices life cycle management asset disposition and asset tracking with enhanced visibility and accountability. In one aspect a utility for use with managing inventory within the infrastructure of a technology service provider includes receiving a first bill of materials (BOM) from a first physical location accessing an asset inventory listing for the technology service provider first allocating assets in the asset inventory listing associated with the first physical location to the quantity of the first requested part of the first line item and second allocating assets in the asset inventory listing associated with one or more additional physical locations within the first market to the quantity of the first requested part responsive to the first using failing to result in fulfillment of the quantity of the first requested part of the first line item.

No. of Pages : 37 No. of Claims : 47

(12) PATENT APPLICATION PUBLICATION
(19) INDIA
(22) Date of filing of Application :24/08/2016
(21) Application No.201617028879 A
(43) Publication Date : 20/01/2017

(54) Title of the invention : LOCK DEVICE

(51) International classification :E05B81/20,E05B83/00,E05B85/04
(31) Priority Document No :2014017059
(32) Priority Date :31/01/2014
(33) Name of priority country :Japan
(86) International Application No :PCT/JP2015/051654
Filing Date :22/01/2015
(87) International Publication No :WO 2015/115299
(61) Patent of Addition to Application Number :NA
Filing Date :NA
(62) Divisional to Application Number :NA
Filing Date :NA

(71)**Name of Applicant :**
1)AISIN SEIKI KABUSHIKI KAISHA
Address of Applicant :1 Asahi machi 2 chome Kariya shi Aichi 4488650 Japan
(72)**Name of Inventor :**
1)TONE Daisuke

(57) Abstract :
A lock device is provided with: a latch unit having a slit which allows a striker to enter and exit and configured to engage with and to be disengaged from the striker; and a support member for supporting a spring member outside the latch unit in such a manner that the spring member extends in the width direction of the slit. The spring member is elastically deformed when in contact with the striker having entered the slit and as a result the spring member applies pressing force to the striker the pressing force acting in the direction in which the striker exits the slit.

No. of Pages : 14 No. of Claims : 5

(12) PATENT APPLICATION PUBLICATION
(19) INDIA
(22) Date of filing of Application :24/08/2016
(21) Application No.201617028880 A
(43) Publication Date : 20/01/2017

(54) Title of the invention : PEPTIDES AND METHODS OF USE

(51) International classification :C07K14/745,C07K7/08,A61K38/00
(31) Priority Document No :61/946103
(32) Priority Date :28/02/2014
(33) Name of priority country :U.S.A.
(86) International Application No :PCT/US2015/018041
Filing Date :27/02/2015
(87) International Publication No :WO 2015/131061
(61) Patent of Addition to Application Number :NA
Filing Date :NA
(62) Divisional to Application Number :NA
Filing Date :NA

(71)**Name of Applicant :**
1)3B PHARMACEUTICALS GMBH
Address of Applicant :Magnusstrasse 11 12489 Berlin Germany
(72)**Name of Inventor :**
1)DOCKAL Michael
2)POLAKOWSKI Thomas
3)OSTERKAMP Frank
4)HARTMANN Rudolf
5)PASCHKE Matthias
6)HARTLIEB Bettina
7)SCHEIFLINGER Friedrich

(57) Abstract :
The invention provides peptides including peptides that bind and optionally inhibit Protein S and compositions thereof. The peptides may be used to e.g. inhibit Protein S activity enhance thrombin formation in a subject increase blood clot formation in a subject treat a blood coagulation disorder in a subject purify Protein S and identify a Protein S binding compound.

No. of Pages : 44 No. of Claims : 27

(12) PATENT APPLICATION PUBLICATION
(19) INDIA
(22) Date of filing of Application :24/08/2016
(21) Application No.201617028881 A
(43) Publication Date : 20/01/2017

(54) Title of the invention : COMPOSITION FOR ACCELERATING PENETRATION THROUGH SKIN PREPARATION FOR TRANSDERMAL ADMINISTRATION AND SKIN PATCH PREPARATION

(51) International classification	:A61K47/22,A61K9/70,A61K31/192
(31) Priority Document No	:2014014539
(32) Priority Date	:29/01/2014
(33) Name of priority country	:Japan
(86) International Application No	:PCT/JP2015/052388
Filing Date	:28/01/2015
(87) International Publication No	:WO 2015/115495
(61) Patent of Addition to Application Number	:NA
Filing Date	:NA
(62) Divisional to Application Number	:NA
Filing Date	:NA

(71)**Name of Applicant :**
1)NITTO DENKO CORPORATION
Address of Applicant :1 2 Shimohozumi 1 chome Ibaraki shi Osaka 5678680 Japan
(72)**Name of Inventor :**
1)MAEDA Yoshiki
2)MATSUSHITA Kyohei
3)LI Wenjing
4)OKUBO Katsuyuki
5)HORI Mitsuhiko

(57) Abstract :
Provided is a composition for accelerating the penetration through the skin which can dramatically improve the penetration of a medicine through the skin without requiring the shaping of the medicine in a particulate structure or the like and without causing the damage of dermal tissues. Also provided are a preparation for transdermal administration and a skin patch preparation each of which contains the composition for accelerating the penetration through the skin. A composition for accelerating the penetration through the skin which contains a flavonoid compound and can be used for accelerating the penetration of a medicine through the skin.

No. of Pages : 26 No. of Claims : 6

(12) PATENT APPLICATION PUBLICATION
(21) Application No.201617028882 A
(19) INDIA
(22) Date of filing of Application :24/08/2016
(43) Publication Date : 20/01/2017

(54) Title of the invention : COMPOSITION FOR ACCELERATING PENETRATION THROUGH SKIN PREPARATION FOR TRANSDERMAL ADMINISTRATION AND SKIN PATCH PREPARATION

(51) International classification	:A61K47/22,A61K9/70,A61K31/192
(31) Priority Document No	:2014014540
(32) Priority Date	:29/01/2014
(33) Name of priority country	:Japan
(86) International Application No	:PCT/JP2015/052389
Filing Date	:28/01/2015
(87) International Publication No	:WO 2015/115496
(61) Patent of Addition to Application Number	:NA
Filing Date	:NA
(62) Divisional to Application Number	:NA
Filing Date	:NA

(71)**Name of Applicant :**
1)NITTO DENKO CORPORATION
Address of Applicant :1 2 Shimohozumi 1 chome Ibaraki shi Osaka 5678680 Japan
(72)**Name of Inventor :**
1)MATSUSHITA Kyohei
2)MAEDA Yoshiki
3)LI Wenjing
4)OKUBO Katsuyuki
5)HORI Mitsuhiko

(57) Abstract :
Provided is a composition for accelerating the penetration through the skin which can dramatically improve the penetration of a medicine through the skin without requiring the shaping of the medicine in a particulate structure or the like and without causing the damage of dermal tissues. Also provided are a preparation for transdermal administration and a skin patch preparation each of which contains the composition for accelerating the penetration through the skin. A composition for accelerating the penetration through the skin which contains a flavonoid compound and a surfactant and can be used for accelerating the penetration of a medicine through the skin.

No. of Pages : 30 No. of Claims : 6

(12) PATENT APPLICATION PUBLICATION
(19) INDIA
(22) Date of filing of Application :24/08/2016
(21) Application No.201617028883 A
(43) Publication Date : 20/01/2017

(54) Title of the invention : THREE STAGE FORMING OF GLASS SHEET WITH TRANSVERSE CURVATURE

(51) International classification :C03B23/035,C03B23/03,C03B35/14
(31) Priority Document No :14/174265
(32) Priority Date :06/02/2014
(33) Name of priority country :U.S.A.
(86) International Application No :PCT/US2015/011520
Filing Date :15/01/2015
(87) International Publication No :WO 2015/119752
(61) Patent of Addition to Application Number :NA
Filing Date :NA
(62) Divisional to Application Number :NA
Filing Date :NA

(71)**Name of Applicant :**
1)GLASSTECH INC.
Address of Applicant :995 Fourth Street Ampoint Industrial Park Perrysburg Ohio 43551 U.S.A.
(72)**Name of Inventor :**
1)NITSCHKE Dean M.
2)GRZESZCZAK Jeffrey A.
3)JINKA Ashoka G.
4)SCHNABEL JR. James P.
5)NITSCHKE David B.

(57) Abstract :
A glass sheet forming station and method utilize first and second upper molds and a lower mold to provide three stage forming. The glass is curved on the upper mold in the first stage but retains straight line elements transverse to the curvature. Transfer of the initially formed glass sheet from the first upper mold to the lower mold then provides the second stage of gravity forming and the glass sheet is then press formed between the second upper mold and the lower mold in the third stage which reduces optical distortion in the central viewing area of the formed glass sheet. In one embodiment the glass sheet is moved horizontally on the lower mold and in another embodiment the glass sheet is moved horizontally on the first upper mold.

No. of Pages : 21 No. of Claims : 39

(12) PATENT APPLICATION PUBLICATION
(21) Application No.201617029075 A
(19) INDIA
(22) Date of filing of Application :26/08/2016
(43) Publication Date : 20/01/2017

(54) Title of the invention : METHOD FOR PRODUCING TEREPHTHALIC ACID

(51) International classification :C07C51/42,C07C63/26
(31) Priority Document No :2014037215
(32) Priority Date :27/02/2014
(33) Name of priority country :Japan
(86) International Application No :PCT/JP2015/055717
Filing Date :26/02/2015
(87) International Publication No :WO 2015/129831
(61) Patent of Addition to Application Number :NA
Filing Date :NA
(62) Divisional to Application Number :NA
Filing Date :NA

(71)**Name of Applicant :**
1)MITSUBISHI CHEMICAL CORPORATION
Address of Applicant :1 1 Marunouchi 1 chome Chiyoda ku Tokyo 1008251 Japan
(72)**Name of Inventor :**
1)IWAI Hideo

(57) Abstract :
The purpose of the present invention is to provide a method for producing terephthalic acid, the method enabling discharged water which includes turbidity produced by a terephthalic acid production process to be continuously run through a membrane separation treatment with long-term stability, and treated separated water to be efficiently reutilized for such terephthalic acid production process as a highly concentrated slurry. The present invention pertains to a method for producing terephthalic acid that includes a membrane separation step, in which discharged water that has been discharged from a terephthalic acid production process comprising an oxidation reaction step where p-xylene is oxidized in the presence of a metal compound to make crude terephthalic acid is run through a membrane separation treatment in a treatment tank equipped with a separation membrane therein, and the discharged water is separated into separated water and membrane-permeating water, the method being characterized in that aeration is performed from a lower section of the separation membrane.

No. of Pages : 35 No. of Claims : 13

(12) PATENT APPLICATION PUBLICATION
(19) INDIA
(22) Date of filing of Application :26/08/2016
(21) Application No.201617029085 A
(43) Publication Date : 20/01/2017

(54) Title of the invention : POWDER INHALER AND POWDER INHALATION SET

(51) International classification :A61M11/00,A61M15/00,A61M15/08
(31) Priority Document No :10 2014 001 072.4
(32) Priority Date :30/01/2014
(33) Name of priority country :Germany
(86) International Application No :PCT/EP2015/000089
Filing Date :20/01/2015
(87) International Publication No :WO 2015/113742
(61) Patent of Addition to Application Number :NA
Filing Date :NA
(62) Divisional to Application Number :NA
Filing Date :NA

(71)**Name of Applicant :**
1)BELLER Klaus Dieter
Address of Applicant :Schulstrasse 18 79341 Kenzingen Germany
(72)**Name of Inventor :**
1)BELLER Klaus Dieter

(57) Abstract :
The invention relates to a powder inhaler and to a powder inhaler set that contains the powder inhaler. The powder inhaler comprises two half-shells (3, 4), which are connected to each other by means of at least one film hinge and are formed as a single piece. In a joined arrangement, the two half-shells (3, 4) enclose an air inlet region, a powder deposition region and powder release region, and an outlet region, through which regions a fluid path extends, wherein at least one of the half-shells (3, 4) has at least one air inlet opening (8) in the air inlet region. Furthermore, one of the half-shells (3, 4) has at least one powderaccommodating recess (9) in the powder deposition region and powder release region, while the outlet region has at least one deagglomeration structure (17, 17) and an outlet for aerosol, which outlet is formed by the half-shells (3, 4).

No. of Pages : 20 No. of Claims : 24

(12) PATENT APPLICATION PUBLICATION
(19) INDIA
(22) Date of filing of Application :26/08/2016
(21) Application No.201617029086 A
(43) Publication Date : 20/01/2017

(54) Title of the invention : POWDER INHALER AND POWDER INHALATION SET

(51) International classification :A61M11/00,A61M15/00,A61M15/08
(31) Priority Document No :10 2014 001 072.4
(32) Priority Date :30/01/2014
(33) Name of priority country :Germany
(86) International Application No :PCT/EP2015/000093
Filing Date :20/01/2015
(87) International Publication No :WO 2015/113743
(61) Patent of Addition to Application Number :NA
Filing Date :NA
(62) Divisional to Application Number :NA
Filing Date :NA

(71)**Name of Applicant :**
1)BELLER Klaus Dieter
Address of Applicant :Schulstrasse 18 79341 Kenzingen Germany
(72)**Name of Inventor :**
1)BELLER Klaus Dieter

(57) Abstract :
The invention relates to a powder inhaler and to a powder inhaler set that contains the powder inhaler. The powder inhaler comprises two half-shells (3, 4), which can be or are articulated to each other and which enclose an air inlet region, a powder deposition region and powder release region, and an outlet region in a joined arrangement, through which regions a fluid path extends. At least one of the half shells (3, 4) has at least one air inlet opening (8) in the air inlet region, and at least one air-swirling structure (5) is present in the air inlet region, which air-swirling structure defines the fluid path between the at least one air inlet opening (8) and the powder deposition and release region. Furthermore, one of the half-shells (3, 4) has at least one powderaccommodating recess (9) in the powder deposition region and powder release region, while the outlet region has at least one deagglomeration structure (17, 17) and an outlet for aerosol, which outlet is formed by the half-shells (3, 4).

No. of Pages : 20 No. of Claims : 17

(12) PATENT APPLICATION PUBLICATION
(19) INDIA
(22) Date of filing of Application :26/08/2016

(21) Application No.201617029087 A
(43) Publication Date : 20/01/2017

(54) Title of the invention : INTERDENTAL CLEANER

(51) International classification :A61C15/02
(31) Priority Document No :14158195.9
(32) Priority Date :06/03/2014
(33) Name of priority country :EPO
(86) International Application No :PCT/EP2014/078338
Filing Date :17/12/2014
(87) International Publication No :WO 2015/011299
(61) Patent of Addition to Application Number :NA
Filing Date :NA
(62) Divisional to Application Number :NA
Filing Date :NA

(71)**Name of Applicant :**
1)TEPE MUNHYGIENPRODUKTER AB
Address of Applicant :Bronsldersgatan 5 S 213 76 Malm Sweden
(72)**Name of Inventor :**
1)WALLSTR–M Paul
2)LARSSON Jan Inge
3)DINGIZIAN Alexander

(57) Abstract :
An interdental cleaner has a gripping portion (3) and a cleaning portion (4) formed by an elongate body made from a thermoplastic material. The cleaning portion (4) has a coating made of a self adhesive heat vulcanized rubber material forming peripheral flexible brush members (6).

No. of Pages : 17 No. of Claims : 25

(12) PATENT APPLICATION PUBLICATION
(19) INDIA
(22) Date of filing of Application :27/08/2016
(21) Application No.201617029238 A
(43) Publication Date : 20/01/2017

(54) Title of the invention : TYK2 INHIBITORS AND USES THEREOF

(51) International classification :C07D491/048,C07D495/04
(31) Priority Document No :61/946358
(32) Priority Date :28/02/2014
(33) Name of priority country :U.S.A.
(86) International Application No :PCT/US2015/018071
Filing Date :27/02/2015
(87) International Publication No :WO 2015/131080
(61) Patent of Addition to Application Number :NA
Filing Date :NA
(62) Divisional to Application Number :NA
Filing Date :NA

(71)**Name of Applicant :**
1)NIMBUS LAKSHMI INC.
Address of Applicant :784 Memorial Drive, Suite 100, Cambridge Massachusetts 02139, United States of America U.S.A.
(72)**Name of Inventor :**
1)MASSE Craig E.
2)GREENWOOD Jeremy Robert
3)ROMERO Donna L.
4)HARRIMAN Geraldine C.
5)WESTER Ronald T.
6)SHELLEY Mee
7)KENNEDY SMITH Joshua Jahmil
8)DAHLGREN Markus

(57) Abstract :
The present invention provides compounds compositions thereof and methods of using the same for the inhibition of TYK2 and the treatment of TYK2 mediated disorders.

No. of Pages : 416 No. of Claims : 39

(12) PATENT APPLICATION PUBLICATION
(21) Application No.201617029239 A
(19) INDIA
(22) Date of filing of Application :27/08/2016
(43) Publication Date : 20/01/2017

(54) Title of the invention : SYSTEM FOR DIRECT PULL INTERNET CONTENT BY/TO ELECTRONIC MAIL OR BY THE SYSTEM

(51) International classification :G06Q10/10
(31) Priority Document No :61/932951
(32) Priority Date :29/01/2014
(33) Name of priority country :U.S.A.
(86) International Application No :PCT/US2015/013480
Filing Date :29/01/2015
(87) International Publication No :WO 2015/116796
(61) Patent of Addition to Application Number :NA
Filing Date :NA
(62) Divisional to Application Number :NA
Filing Date :NA

(71)**Name of Applicant :**
1)DAMINO Lucia N.
Address of Applicant :1844 Lakeland Sylvan Lake MI 48320 U.S.A.
(72)**Name of Inventor :**
1)DAMINO Lucia N.

(57) Abstract :
A computer system for delivering user email SMS/MMS text or system prompted internet content via email and a proprietary user interface. The system facilitates the delivery and access of internet available and prepared content whether it a file text or a link to a web page by using email SMS/MMs text or the system through an electronic device that communicates over a network to the computer system. The system matches the email text or system user request and the information sent by a requesting user to content predefined by a sending user to deliver that content. The computer system directly connects users to internet content. The computer system provides the receiving user with internet files text or web page links that fulfills the receiving user s request for information from the sending user. When the receiving user initiates the request for information the computer system records the request for that information.

No. of Pages : 10 No. of Claims : 20

(12) PATENT APPLICATION PUBLICATION
(21) Application No.201617029246 A
(19) INDIA
(22) Date of filing of Application :28/08/2016
(43) Publication Date : 20/01/2017

(54) Title of the invention : FINGERPRINT RECOGNITION DEVICE MANUFACTURING METHOD THEREFOR AND ELECTRONIC DEVICE

(51) International classification :G06K9/00
(31) Priority Document No :1020140011408
(32) Priority Date :29/01/2014
(33) Name of priority country :Republic of Korea
(86) International Application No :PCT/KR2014/008585
Filing Date :15/09/2014
(87) International Publication No :WO 2015/115716
(61) Patent of Addition to Application Number :NA
Filing Date :NA
(62) Divisional to Application Number :NA
Filing Date :NA

(71)**Name of Applicant :**
1)SAMSUNG ELECTRONICS CO. LTD.
Address of Applicant :129 Samsung ro Yeongtong gu Suwon si Gyeonggi do 443 742 Republic of Korea
(72)**Name of Inventor :**
1)KIM Il
2)MOON Young Jun
3)PARK Tae Sang
4)JANG Kyung Woon
5)OH Seung Hee
6)CHUNG Chang Kyu
7)LEE Dong Yul

(57) Abstract :
Disclosed are fingerprint recognition device having an improved structure to enable a driving device of an integrated circuit to have durability a manufacturing method therefor and an electronic device. The fingerprint recognition device can comprise: an integrated circuit electrically connected to at least one sensor electrode; a first circuit board located at an upper part of the integrated circuit and provided with the at least one sensor electrode; a second circuit board electrically connected to the first circuit board and located at a lower part of the integrated circuit; a molding layer provided at a lower part of the first circuit board to surround the integrated circuit so as to protect the integrated circuit from the outside; and a connection part electrically connecting the first circuit board and the second circuit board.

No. of Pages : 21 No. of Claims : 43

(12) PATENT APPLICATION PUBLICATION
(19) INDIA
(22) Date of filing of Application :29/08/2016
(21) Application No.201617029266 A
(43) Publication Date : 20/01/2017

(54) Title of the invention : INTEGRATED 3D METHOD FOR PREDICTION OF MUD WEIGHT WINDOW FOR COMPLEX WELL SECTIONS

(51) International classification :E21B44/00,G06G7/48,G06T17/05
(31) Priority Document No :PCT/US2014/035023
(32) Priority Date :22/04/2014
(33) Name of priority country :PCT
(86) International Application No :PCT/US2014/035023
Filing Date :22/04/2014
(87) International Publication No :WO 2015/163858
(61) Patent of Addition to Application Number :NA
Filing Date :NA
(62) Divisional to Application Number :NA
Filing Date :NA

(71)**Name of Applicant :**
1)LANDMARK GRAPHICS CORPORATION
Address of Applicant :2107 City West Blvd. Bldg. 2 Houston Texas 77042 U.S.A.
(72)**Name of Inventor :**
1)SHEN Xinpu
2)HU Xiaomin
3)ZHENG Xiuyun
4)STANDIFIRD William Bradley

(57) Abstract :
A method is provided for determining a mud weight window for an oil and gas well. One implementation of the method includes creating a 3D finite element model for at least a portion of the field in which the well is located. Next at least three components of stress are determined using the 3D finite element model. The values of at least three of the stress components from the 3D finite element model may then be extracted and integrated with a ID analytical model for the well to determine the mud weight window for the well.

No. of Pages : 11 No. of Claims : 20

(12) PATENT APPLICATION PUBLICATION
(19) INDIA
(22) Date of filing of Application :29/08/2016
(21) Application No.201617029275 A
(43) Publication Date : 20/01/2017

(54) Title of the invention : MANAGED CONNECTIVITY IN OPTICAL DISTRIBUTION FRAME

(51) International classification :G02B6/44
(31) Priority Document No :NA
(32) Priority Date :NA
(33) Name of priority country :NA
(86) International Application No :PCT/CN2014/072099
Filing Date :14/02/2014
(87) International Publication No :WO 2015/120617
(61) Patent of Addition to Application Number :NA
Filing Date :NA
(62) Divisional to Application Number :NA
Filing Date :NA

(71)**Name of Applicant :**
1)TYCO ELECTRONICS UK LTD.
Address of Applicant :Faraday Road Dorcan Swindon Wiltshire SN3 5HH U.K.
2)TYCO ELECTRONICS (SHANGHAI) CO. LTD.
(72)**Name of Inventor :**
1)LAMBOURN Stephen
2)STANDISH Ian Miles
3)COOK Alan
4)MATHER David
5)HOLLOWAY Lee
6)WANG Junkai

(57) Abstract :
A connection assembly (100) includes a base structure (110); a back plane (120) coupled to the base structure (110) the back plane (120) including a first circuit board (122); and a tray module (140) configured to couple to the back plane (120). The tray module (140) includes a tray body (160) including a second circuit board (162); and a bridge member (150) to which the tray body (160) is moveably coupled. The tray body (160) moves relative to the back plane (120) while the bridge member (150) remains stationary relative to the back plane (120). Managed connectivity components (250) on the second circuit board (162) remain connected to the first circuit board (122) even while the tray body (160) is pivoting relative to the back plane (120).

No. of Pages : 26 No. of Claims : 55

(12) PATENT APPLICATION PUBLICATION
(19) INDIA
(22) Date of filing of Application :24/08/2016
(21) Application No.201617028884 A
(43) Publication Date : 20/01/2017

(54) Title of the invention : MONITORING AND MEASURING OF MULTIPLE LIGHT SOURCES ESPECIALLY HELIOSTATS

(51) International classification	:G02B7/38,G02B7/198,G02B26/08
(31) Priority Document No	:2014900365
(32) Priority Date	:06/02/2014
(33) Name of priority country	:Australia
(86) International Application No	:PCT/AU2015/000066
Filing Date	:06/02/2015
(87) International Publication No	:WO 2015/117192
(61) Patent of Addition to Application Number	:NA
Filing Date	:NA
(62) Divisional to Application Number	:NA
Filing Date	:NA

(71)**Name of Applicant :**
1)COMMONWEALTH SCIENTIFIC AND INDUSTRIAL RESEARCH ORGANISATION
Address of Applicant :Limestone Avenue Campbell Australian Capital Territory 2612 Australia
(72)**Name of Inventor :**
1)BURTON Alexander
2)COLLINS Michael

(57) Abstract :
Described herein is an apparatus for monitoring and/or measuring multiple directional light radiative sources (15) each radiative source directing light radiation as a beam (202) of limited solid angle. The apparatus comprises a measuring device (33) having the capability to angularly distinguish the directional radiative sources from one another. The apparatus also includes means to scan the measuring device (33) across or through a zone on which at least 50% of the radiation beam from each radiative source impinges. The apparatus includes means (32) to record a set of multiple images respectively detected at the measuring device (33) at successive positions of the measuring device (33) during said scan. The radiation from the multiple directional radiative sources (15) is recorded at different positions of the measuring device (33) as the measuring device is scanned across the zone. The positions are sufficiently distinguishable in said set of multiple images to permit simultaneous measuring and/or monitoring of the directional radiative sources during a single scan of the measuring device (33) across or through said zone.

No. of Pages : 20 No. of Claims : 20

(12) PATENT APPLICATION PUBLICATION
(21) Application No.201617028888 A
(19) INDIA
(22) Date of filing of Application :24/08/2016
(43) Publication Date : 20/01/2017

(54) Title of the invention : SINGLE CELL PIPETTE ASSEMBLY COMPRISING SINGLE CELL PIPETTE HANDLE AND SINGLE CELL PIPETTE TIP

(51) International classification :B01L3/02
(31) Priority Document No :61/932493
(32) Priority Date :28/01/2014
(33) Name of priority country :U.S.A.
(86) International Application No :PCT/US2015/013343
Filing Date :28/01/2015
(87) International Publication No :WO 2015/116714
(61) Patent of Addition to Application Number :NA
Filing Date :NA
(62) Divisional to Application Number :NA
Filing Date :NA

(71)**Name of Applicant :**
1)THE METHODIST HOSPITAL
Address of Applicant :6565 Fannin St. MS D200 Houston TX 77030 U.S.A.
(72)**Name of Inventor :**
1)QIN Lidong
2)ZHANG Kai

(57) Abstract :
Apparatus for isolating an individual cell from a group of cells and transferring that isolated cell to a desired location the apparatus comprising: a single cell pipette tip the single cell pipette tip comprising: a structure having a distal end; a Y shaped microchannel formed in the structure the Y shaped microchannel comprising a base microchannel a first branch microchannel and a second branch microchannel wherein the base microchannel extends to the distal end of the structure the first branch microchannel is connectable to a first pressure channel the second branch microchannel is connectable to a second pressure channel and a single cell trap is disposed in the base microchannel distal to the convergence of the base microchannel with the first branch microchannel and the second branch microchannel.

No. of Pages : 28 No. of Claims : 33

(12) PATENT APPLICATION PUBLICATION
(19) INDIA
(22) Date of filing of Application :24/08/2016
(21) Application No.201617028908 A
(43) Publication Date : 20/01/2017

(54) Title of the invention : DISPOSABLE PANTS TYPE DIAPER

(51) International classification	:A61F13/15,A61F13/49,A61F13/496
(31) Priority Document No	:2014049111
(32) Priority Date	:12/03/2014
(33) Name of priority country	:Japan
(86) International Application No	:PCT/JP2015/055558
Filing Date	:26/02/2015
(87) International Publication No	:WO 2015/137128
(61) Patent of Addition to Application Number	:NA
Filing Date	:NA
(62) Divisional to Application Number	:NA
Filing Date	:NA

(71)**Name of Applicant :**
1)DAIO PAPER CORPORATION
Address of Applicant :2 60 Mishimakamiyacho Shikokuchuo shi Ehime 7990492 Japan
(72)**Name of Inventor :**
1)ISHIKAWA Yasuko
2)SENO Shunji

(57) Abstract :
A disposable pants type diaper provided with a waist edge section that has straight line drapes and gives a comfortable wear feeling characterized in that: in an inner layer (21) and an outer layer (22) at a waist edge section (W) of a covering body (12) a sheet bonded section (70) is formed by bonding with an adhesive (71) which is intermittently disposed in the width direction and continuous along the direction intersecting with the width direction or by welding; an elastic stretchable member (17) in the waist edge section is interposed between the inner layer (21) and the outer layer (22) and fixed to the inner layer (21) and/or the outer layer (22) at a position intersecting with the sheet bonded section (70); and at an edge section of a waist opening (WO) in the waist edge section (W) of the covering body (12) neither the sheet bonded section (70) nor the elastic stretchable member (17) in the waist edge section is formed but a non bonded and non elastic stretchable member area (25) the longitudinal range of which is wider than the interval between the elastic stretchable member (17) in the waist edge section that is positioned closest to the waist opening (WO) and the elastic stretchable member (17) in the waist edge section that is adjacent thereto is provided.

No. of Pages : 76 No. of Claims : 10

(12) PATENT APPLICATION PUBLICATION
(21) Application No.201617029295 A
(19) INDIA
(22) Date of filing of Application :29/08/2016
(43) Publication Date : 20/01/2017

(54) Title of the invention : HIGH PRECISION MANUFACTURE CONTROL METHOD FOR ELECTROMECHANICAL DEVICE

(51) International classification :B23P21/00
(31) Priority Document No :201410503650.8
(32) Priority Date :26/09/2014
(33) Name of priority country :China
(86) International Application No :PCT/CN2015/090045
Filing Date :18/09/2015
(87) International Publication No :WO 2016/045552
(61) Patent of Addition to Application Number :NA
Filing Date :NA
(62) Divisional to Application Number :NA
Filing Date :NA

(71)**Name of Applicant :**
1)HUANG Guofeng
Address of Applicant :Room 12hxinghuyuan No.5 Xinan Street Huicheng Huizhou Guangdong 516007 China
(72)**Name of Inventor :**
1)HUANG Guofeng

(57) Abstract :
Disclosed is a high precision manufacture control method for an electromechanical device. With regard to the design of various parts and components of various electromechanical devices the present method designs and simultaneously sets various precision technical requirement values of respective concentric geometric tolerances of a plurality of pieces and portions of various structures provides comprehensive precision adjustable moving fine control parts and components in multi surface solids of various parts having or not having a rotating or moving part various orbital motion auxiliary parts various mechanical components and electromechanical components respectively provides comprehensive adjustable static fine control parts and components in multi surface solids of various parts and components of combinations of the above and provides comprehensive fine control adjustment parts at various positions between the combinations. The parts are manufactured according to technical indices. Assembly is performed and fine adjustment is performed according to comparison calculation fitting of the various designed and set technical requirement values and numerical values measured by various instruments and meters so that between the above combinations fixing is performed after various technical requirements of concentric geometric tolerances have respectively been achieved.

No. of Pages : 25 No. of Claims : 2

(12) PATENT APPLICATION PUBLICATION
(19) INDIA
(22) Date of filing of Application :29/08/2016
(21) Application No.201617029300 A
(43) Publication Date : 20/01/2017

(54) Title of the invention : HUMANIZED ANTIBODIES WITH INCREASED STABILITY

(51) International classification :C07K16/28,C07K16/30,A61P35/00
(31) Priority Document No :61/953035
(32) Priority Date :14/03/2014
(33) Name of priority country :U.S.A.
(86) International Application No :PCT/EP2015/055224
Filing Date :12/03/2015
(87) International Publication No :WO 2015/136052
(61) Patent of Addition to Application Number :NA
Filing Date :NA
(62) Divisional to Application Number :NA
Filing Date :NA

(71)**Name of Applicant :**
1)INNATE PHARMA
Address of Applicant :117 avenue de Luminy F 13009 Marseille France
(72)**Name of Inventor :**
1)GAUTHIER Laurent
2)SCHNEIDER Nicolas

(57) Abstract :
The present invention provides antibodies having improved stability. Included are antibodies that are capable of binding to KIR3DL2 polypeptides. The antibodies are suitable for the treatment of disorders characterized by KIR3DL2 expressing cells particularly CD4+ T cells including malignancies such as Mycosis Fungoides and Sezary Syndrome and KIR3DL2 expressing autoimmune disorders.

No. of Pages : 50 No. of Claims : 27

(12) PATENT APPLICATION PUBLICATION
(19) INDIA
(22) Date of filing of Application :29/08/2016
(21) Application No.201617029308 A
(43) Publication Date : 20/01/2017

(54) Title of the invention : COAL CO GASIFICATION METHOD

(51) International classification :C10J3/46
(31) Priority Document No :201410150177.X
(32) Priority Date :15/04/2014
(33) Name of priority country :China
(86) International Application No :PCT/CN2015/076348
Filing Date :10/04/2015
(87) International Publication No :WO 2015/158223
(61) Patent of Addition to Application Number :NA
Filing Date :NA
(62) Divisional to Application Number :NA
Filing Date :NA

(71)**Name of Applicant :**
1)ENN COAL GASIFICATION MINING CO. LTD.
Address of Applicant :Room 522 Building B Southern District Xin Ao Science and Technology Park HuaXiang Road Economic and Technology Development Zone LangFang Hebei 065001 China
(72)**Name of Inventor :**
1)CHEN Feng
2)PAN Xia

(57) Abstract :
A coal co-gasification method, comprising the following steps: 1, fuel and a first pressurised oxygen-containing gas are injected into a gasifier, and the fuel is ignited so as to increase the temperature inside the gasifier; 2, when the temperature increase reaches a temperature capable of igniting powdered coal to be injected, injection of the fuel is stopped, injection of the first pressurised oxygen-containing gas is continued, and a pressurised carbon dioxide gas carrying the powdered coal to be injected is injected into the gasifier so as to perform powdered coal gasification; 3, once the powdered coal gasification has stabilised, coal-water slurry and an oxygen-containing gas are injected into the gasifier to perform co-gasification. The method operates stably, and overcomes cumbersome and time-consuming adjustment steps in the prior art.

No. of Pages : 20 No. of Claims : 13

(12) PATENT APPLICATION PUBLICATION
(21) Application No.201617029309 A
(19) INDIA
(22) Date of filing of Application :29/08/2016
(43) Publication Date : 20/01/2017

(54) Title of the invention : NEEDLE ASSEMBLY

(51) International classification :A61M5/32
(31) Priority Document No :2014047160
(32) Priority Date :11/03/2014
(33) Name of priority country :Japan
(86) International Application No :PCT/JP2015/056914
Filing Date :10/03/2015
(87) International Publication No :WO 2015/137298
(61) Patent of Addition to Application Number :NA
Filing Date :NA
(62) Divisional to Application Number :NA
Filing Date :NA

(71)**Name of Applicant :**
1)NIPRO CORPORATION
Address of Applicant :9 3 Honjo nishi 3 chome Kita ku Osaka shi Osaka 5318510 Japan
(72)**Name of Inventor :**
1)UCHIDA Yoshikuni
2)INAGE Nobuaki

(57) Abstract :
A needle assembly (1) is provided with a cover (5/7) provided so as to be able to move to a first position in which a cannula (2/3) is exposed and a second position in which a distal end protrudes past the cannula. The cover (5/7) is provided with a circumferential locking part (25/43) and a locking projection (5a/33a) movable along a front rear groove (24/42) continuous with the circumferential locking part (25/43) or along the circumferential locking part (25/43) and the front rear groove (24/42). In a state in which the cover (5/7) is in a first position and the locking projection (5a/33a) is accommodated in the circumferential locking part (25/43) movement of the cover (5/7) in the front rear direction is impeded and when the locking projection (5a/33a) moves along the circumferential locking part (25/43) toward the front rear groove (24/42) the locking projection (5a/33a) becomes movable along the front rear groove (24/42) and the cover (5/7) is allowed to move to the second position. Protrusion to the outside is thereby reduced as much as possible and movement of the cover due to malfunctioning is prevented.

No. of Pages : 37 No. of Claims : 8

(12) PATENT APPLICATION PUBLICATION
(19) INDIA
(22) Date of filing of Application :26/08/2016
(21) Application No.201617029103 A
(43) Publication Date : 20/01/2017

(54) Title of the invention : ELECTRIC MODULE COMPRISING A TENSIONING DEVICE

(51) International classification :H05K7/20,H01L23/40,H01L25/11
(31) Priority Document No :NA
(32) Priority Date :NA
(33) Name of priority country :NA
(86) International Application No :PCT/EP2014/055623
Filing Date :20/03/2014
(87) International Publication No :WO 2015/139754
(61) Patent of Addition to Application Number :NA
Filing Date :NA
(62) Divisional to Application Number :NA
Filing Date :NA

(71)**Name of Applicant :**
1)SIEMENS AKTIENGESELLSCHAFT
Address of Applicant :Wittelsbacherplatz 2 80333 M¼nchen Germany
(72)**Name of Inventor :**
1)SCHMITT Daniel
2)ZENKNER Andreas

(57) Abstract :
The invention relates to an electric module (10) comprising at least one electrical component (21, 22). According to the invention, the electric module (10) comprises at least one hollow article (40, 50, 200) which is filled or can be filled with a medium, particularly a fluid, and which exerts a compressive force, dependent on the prevailing inner pressure in the interior of said hollow article (40, 50, 200), onto the at least one component (21, 22) of the module (10).

No. of Pages : 22 No. of Claims : 14

(12) PATENT APPLICATION PUBLICATION
(21) Application No.201617029104 A
(19) INDIA
(22) Date of filing of Application :26/08/2016
(43) Publication Date : 20/01/2017

(54) Title of the invention : HIGH YIELD RATIO HIGH STRENGTH COLD ROLLED STEEL SHEET AND PRODUCTION METHOD THEREFOR

(51) International classification :C22C38/00,C21D9/46,C22C38/14
(31) Priority Document No :2014073268
(32) Priority Date :31/03/2014
(33) Name of priority country :Japan
(86) International Application No :PCT/JP2015/001455
Filing Date :17/03/2015
(87) International Publication No :WO 2015/151427
(61) Patent of Addition to Application Number :NA
Filing Date :NA
(62) Divisional to Application Number :NA
Filing Date :NA

(71)**Name of Applicant :**
1)JFE STEEL CORPORATION
Address of Applicant :2 3 Uchisaiwai cho 2 chome Chiyoda ku Tokyo 1000011 Japan
(72)**Name of Inventor :**
1)TAKASHIMA Katsutoshi
2)HASEGAWA Kohei

(57) Abstract :
Provided is a high strength cold rolled steel sheet that has a high yield ratio and that has excellent extensibility hole expandability and delayed fracture resistance characteristics. Also provided is a production method for the high strength cold rolled steel sheet. A high yield ratio high strength cold rolled steel sheet that contains as principal components by mass percent 0.13% 0.25% of C 1.2% 2.2% of Si 2.0% 3.2% of Mn 0.08% or less of P 0.005% or less of S 0.01% 0.08% of Al and 0.008% or less of N and 0.055% 0.130% of Ti the remainder comprising Fe and unavoidable impurities and that has a microstructure that has a volume fraction of 2% 15% of ferrite that has an average crystalline particle diameter of 2 µm or less a volume fraction of 5% 20% of retained austenite that has an average crystalline particle diameter of 0.3 2.0 µm and a volume fraction of 10% or less (including 0%) of martensite that has an average crystalline particle diameter of 2 µm or less the remainder being bainite and tempered martensite the average crystalline particle diameter of the bainite and the tempered martensite being 5 µm or less.

No. of Pages : 51 No. of Claims : 6

(12) PATENT APPLICATION PUBLICATION
(21) Application No.201617029105 A
(19) INDIA
(22) Date of filing of Application :26/08/2016
(43) Publication Date : 20/01/2017

(54) Title of the invention : METHOD FOR PRODUCING CAST ARTICLE AND BREATHABLE MOLD

(51) International classification :B22C9/08,B22C9/02,B22D27/13
(31) Priority Document No :2014037839
(32) Priority Date :28/02/2014
(33) Name of priority country :Japan
(86) International Application No :PCT/JP2014/083773
Filing Date :19/12/2014
(87) International Publication No :WO 2015/129134
(61) Patent of Addition to Application Number :NA
Filing Date :NA
(62) Divisional to Application Number :NA
Filing Date :NA

(71)**Name of Applicant :**
1)HITACHI METALS LTD.
Address of Applicant :2 70 Konan 1 chome Minato ku Tokyo 1088224 Japan
(72)**Name of Inventor :**
1)WANG Lin
2)FUJII Yoshimasa
3)IWANAGA Toru

(57) Abstract :
Provided is a method for producing a cast article in which a permeable casting mold which has a product cavity and a molten metal channel as mold cavities and in which the molten metal channel comprises a sprue part from which gravity poured molten metal flows down and a runner which couples the product cavity and the sprue part is used to gravity pour a metal melt of lesser volume than that of the entirety of the mold cavities and of greater volume than that of the product cavity and then gas is delivered from the sprue part and the metal melt inside the molten metal channel is pushed in whereby the metal melt inside the product cavity is pushed up and the product cavity is filled with the metal melt. When an equilibrium state is presumed where the inside of the product cavity is filled with the virtual liquid by the delivery of gas the metal melt of the same volume as the volume of the virtual liquid is poured such that the virtual liquid fills the product cavity and the molten metal of the same volume as the volume of the virtual liquid is poured such that a height (hs) of a liquid level of the virtual liquid remaining inside the molten metal channel a height (h1) of a lowest portion of a ceiling of the runner and a height (h2) of a portion where the ceiling of the runner connects to the sprue part satisfy h2>hs>h1.

No. of Pages : 27 No. of Claims : 4

(12) PATENT APPLICATION PUBLICATION
(19) INDIA
(22) Date of filing of Application :26/08/2016
(21) Application No.201617029106 A
(43) Publication Date : 20/01/2017

(54) Title of the invention : RNA PRODUCTION IN HIGHER PLANTS

(51) International classification	:C12N15/113,C12N15/29,C12N15/82
(31) Priority Document No	:61/951569
(32) Priority Date	:12/03/2014
(33) Name of priority country	:U.S.A.
(86) International Application No	:PCT/AU2015/050101
Filing Date	:12/03/2015
(87) International Publication No	:WO 2015/135039
(61) Patent of Addition to Application Number	:NA
Filing Date	:NA
(62) Divisional to Application Number	:NA
Filing Date	:NA

(71)**Name of Applicant :**
1)THE UNIVERSITY OF SYDNEY
Address of Applicant :Parramatta Road The University Of Sydney New South Wales 2006 Australia
(72)**Name of Inventor :**
1)MCINTYRE Glen John
2)WATERHOUSE Peter Michael
3)NARVA Kenneth
4)LARRINUA Ignacio Mario

(57) Abstract :
The invention relates to RNA production and processing in plastids of higher plants.

No. of Pages : 71 No. of Claims : 26

(12) PATENT APPLICATION PUBLICATION
(21) Application No.201617028915 A
(19) INDIA
(22) Date of filing of Application :24/08/2016
(43) Publication Date : 20/01/2017

(54) Title of the invention : ALTERNATIVE ADDITIVES TO ENHANCE SLURRY DEWATERING

(51) International classification :B01D37/03
(31) Priority Document No :14/190507
(32) Priority Date :26/02/2014
(33) Name of priority country :U.S.A.
(86) International Application No :PCT/US2015/016146
Filing Date :17/02/2015
(87) International Publication No :WO 2015/130511
(61) Patent of Addition to Application Number :NA
Filing Date :NA
(62) Divisional to Application Number :NA
Filing Date :NA

(71)**Name of Applicant :**
1)ECOLAB USA INC.
Address of Applicant :370 N. Wabasha Street St. Paul Minnesota 55102 U.S.A.
(72)**Name of Inventor :**
1)URBANI Carl Nicholas

(57) Abstract :
The invention provides methods and compositions for improving dewatering of mineral slurry. The method comprises adding an R Succinic Compound (such as octadecenyl succinic acid hexadecenyl succinic acid and/or dodecenyl succinic acid) to the slurry. The R Succinic Compound removes water that would otherwise be trapped within the filtered slurry cake.

No. of Pages : 18 No. of Claims : 14

(12) PATENT APPLICATION PUBLICATION
(19) INDIA
(22) Date of filing of Application :25/08/2016

(21) Application No.201617028928 A
(43) Publication Date : 20/01/2017

(54) Title of the invention : TREATMENT OF RETINAL DEGENERATION USING GENE THERAPY

(51) International classification :A61K38/17,A61K38/51,A61K48/00
(31) Priority Document No :1403260.1
(32) Priority Date :25/02/2014
(33) Name of priority country :U.K.
(86) International Application No :PCT/GB2015/050516
Filing Date :24/02/2015
(87) International Publication No :WO 2015/128624
(61) Patent of Addition to Application Number :NA
Filing Date :NA
(62) Divisional to Application Number :NA
Filing Date :NA

(71)**Name of Applicant :**
1)THE UNIVERSITY OF MANCHESTER
Address of Applicant :Oxford Road Manchester M13 9PL U.K.
(72)**Name of Inventor :**
1)LUCAS Robert
2)BISHOP Paul
3)CEHAJIC KAPETANOVIC Jasmina

(57) Abstract :
The present invention relates to an improved method of providing photo receptor function to a cell for example for use in the treatment of retinal degeneration. The present invention also relates to compositions and kits in particular for use in such methods.

No. of Pages : 51 No. of Claims : 81

(12) PATENT APPLICATION PUBLICATION
(21) Application No.201617028936 A
(19) INDIA
(22) Date of filing of Application :25/08/2016
(43) Publication Date : 20/01/2017

(54) Title of the invention : DEVICE FOR FORMING FINISH FORGING BLANK FOR FORGED CRANKSHAFT OF INLINE SIX ENGINE AND METHOD FOR MANUFACTURING FORGED CRANKSHAFT OF INLINE SIX ENGINE USING SAID DEVICE

(51) International classification :B21K1/08,B21J5/08,F16C3/08
(31) Priority Document No :2014037652
(32) Priority Date :28/02/2014
(33) Name of priority country :Japan
(86) International Application No :PCT/JP2015/000807
Filing Date :20/02/2015
(87) International Publication No :WO 2015/129217
(61) Patent of Addition to Application Number :NA
Filing Date :NA
(62) Divisional to Application Number :NA
Filing Date :NA

(71)**Name of Applicant :**
1)NIPPON STEEL & SUMITOMO METAL CORPORATION
Address of Applicant :6 1 Marunouchi 2 chome Chiyoda ku Tokyo 1008071 Japan
(72)**Name of Inventor :**
1)OKUBO Junichi
2)TAMURA Kenji
3)YOSHIDA Kunihiro

(57) Abstract :
A forming device wherein: a movable journal mold (10U 10B) and a movable pin mold (12) are caused to move in an axial direction toward a fixed journal mold (9U 9B) from a state in which the raw journal section (Ja) of a raw material (4) is held between the movable journal mold (10U 10B) and the fixed journal mold (9U 9B) and in which the movable pin mold (12) is applied to a raw pin part (Pa); and the movable pin mold (12) is caused to move in the axial direction and an orthogonal direction. A raw arm section (Aa) is thereby compressed from either side in the axial direction the thickness thereof being reduced to the thickness of the arm section of the forged crankshaft. Pressure is applied to the raw pin part (Pa) in the axial direction and the orthogonal direction the amount of eccentricity thereof being raised to the degree of eccentricity of the pin part of the forged crankshaft.

No. of Pages : 54 No. of Claims : 16

(12) PATENT APPLICATION PUBLICATION
(21) Application No.201617028940 A
(19) INDIA
(22) Date of filing of Application :25/08/2016
(43) Publication Date : 20/01/2017

(54) Title of the invention : MEASURING DEVICE WITH MAGNETICALLY COUPLED DATA TRANSMITTING AND DATA READING PARTS

(51) International classification :G01D11/30
(31) Priority Document No :10 2014 201 666.5
(32) Priority Date :30/01/2014
(33) Name of priority country :Germany
(86) International Application No :PCT/DE2015/200003
Filing Date :15/01/2015
(87) International Publication No :WO 2015/113563
(61) Patent of Addition to Application Number :NA
Filing Date :NA
(62) Divisional to Application Number :NA
Filing Date :NA

(71)**Name of Applicant :**
1)PRFTECHNIK DIETER BUSCH AG
Address of Applicant :Oskar Messter Str. 19 21 85737 Ismaning Germany
(72)**Name of Inventor :**
1)LYSEN Heinrich

(57) Abstract :
A measuring device (22) comprises at least one transmitting part (25) which can be attached to measurement objects (30) and which has at least one data memory (31) and at least two first electrical contacts (27) having respective surfaces that form respective sub areas of a bearing face of the transmitting part (25) at least one data reading part (26) which has at least two second electrical contacts (28) having respective surfaces that form respective sub areas of a bearing face of the data reading part (26) and at least one magnet (29). The measuring device (22) here is designed to assume an uncoupled state in which the first electrical contacts (27) are at a distance from the second electrical contacts (28) and to assume a coupled state in which the data reading part (26) and the transmitting part (25) are coupled to one another due to an attraction force brought about by the magnet (29) wherein the bearing face of the transmitting part (25) and the bearing face of the data reading part (26) bear against one another and one of the first electrical contacts (27) in each case bears with its surface against the surface of a respective one of the second electrical contacts (28) as a result of which electrically conductive connections exist between respective first contacts (27) and second contacts (28) bearing against one another which connections make it possible for the data reading part (26) to read data stored in the data memory (31).

No. of Pages : 24 No. of Claims : 11

(12) PATENT APPLICATION PUBLICATION
(19) INDIA
(22) Date of filing of Application :29/08/2016
(21) Application No.201617029310 A
(43) Publication Date : 20/01/2017

(54) Title of the invention : ISOLATING DECOUPLER

(51) International classification :F16F15/123,F16J15/16,F16H55/46
(31) Priority Document No :14/201510
(32) Priority Date :07/03/2014
(33) Name of priority country :U.S.A.
(86) International Application No :PCT/US2015/016138
Filing Date :17/02/2015
(87) International Publication No :WO 2015/134180
(61) Patent of Addition to Application Number :NA
Filing Date :NA
(62) Divisional to Application Number :NA
Filing Date :NA

(71)**Name of Applicant :**
1)GATES CORPORATION
Address of Applicant :1551 Wewatta Street IP Law Dept. 10 A3 Denver Colorado 80202 U.S.A.
(72)**Name of Inventor :**
1)SERKH Alexander

(57) Abstract :
An isolator decoupler comprising a shaft a pulley journalled to the shaft a torsion spring engaged between the pulley and a carrier the torsion spring loaded in an unwinding direction the carrier engaged with a first spring ring the first spring ring engaged in series with a second spring ring the second spring ring engaged in series with a wrap spring the wrap spring frictionally engagable with a shaft surface the first spring ring the second spring ring and wrap spring each loaded in an unwinding direction and a sealing member radially expands under acceleration to sealingly engage the pulley the sealing member engaged with the shaft when not under acceleration.

No. of Pages : 9 No. of Claims : 20

(12) PATENT APPLICATION PUBLICATION
(19) INDIA
(22) Date of filing of Application :29/08/2016
(21) Application No.201617029311 A
(43) Publication Date : 20/01/2017

(54) Title of the invention : SIGNALLING FOR COORDINATED MULTI POINT TRANSMISSION AND RECEPTION (COMP)

(51) International classification :H04B7/02,H04B17/309
(31) Priority Document No :61/955559
(32) Priority Date :19/03/2014
(33) Name of priority country :U.S.A.
(86) International Application No :PCT/US2015/021369
Filing Date :19/03/2015
(87) International Publication No :WO 2015/143100
(61) Patent of Addition to Application Number :NA
Filing Date :NA
(62) Divisional to Application Number :NA
Filing Date :NA

(71)**Name of Applicant :**
1)NEC corporation
Address of Applicant :7 1 Shiba 5 chome Minato ku Tokyo Japan 108 8001 Japan
(72)**Name of Inventor :**
1)PRASAD Narayan
2)KHOJASTEPOUR Mohammad
3)ARSLAN Mustafa
4)SUNDARESAN Karthikeyan
5)RANGARAJAN Sampath

(57) Abstract :
In a wireless communications system including a first transmission point and a second transmission point a wireless communications method implemented in the first transmission point supporting coordinated multi point transmission and reception (CoMP) is disclosed. The wireless communications method comprises transmitting to the second transmission point one or more CoMP hypothesis sets and transmitting to the second transmission point a benefit metric corresponding to each CoMP hypothesis set wherein the benefit metric can be a negative value. Other methods systems and apparatuses also are disclosed.

No. of Pages : 36 No. of Claims : 14

(12) PATENT APPLICATION PUBLICATION
(19) INDIA
(22) Date of filing of Application :29/08/2016
(21) Application No.201617029312 A
(43) Publication Date : 20/01/2017

(54) Title of the invention : SIGNALLING FOR COORDINATED MULTI POINT TRANSMISSION AND RECEPTION (COMP)

(51) International classification :H04B7/02,H04B17/318
(31) Priority Document No :61/955559
(32) Priority Date :19/03/2014
(33) Name of priority country :U.S.A.
(86) International Application No :PCT/US2015/021372
Filing Date :19/03/2015
(87) International Publication No :WO 2015/143101
(61) Patent of Addition to Application Number :NA
Filing Date :NA
(62) Divisional to Application Number :NA
Filing Date :NA

(71)**Name of Applicant :**
1)NEC corporation
Address of Applicant :7 1 Shiba 5 chome Minato ku Tokyo 108 8001 Japan Japan
(72)**Name of Inventor :**
1)PRASAD Narayan
2)KHOJASTEPOUR Mohammad
3)ARSLAN Mustafa
4)SUNDARESAN Karthikeyan
5)RANGARAJAN Sampath

(57) Abstract :
A wireless communications method implemented in a transmission point (TP) used in a wireless communications system is disclosed. The wireless communications method comprises receiving from another TP channel state information (CSI) for a user equipment (UE) and receiving from said another TP user identification for the user equipment wherein the signaling of the CSI for the user equipment enables user identification for the user equipment. Other methods systems and apparatuses also are disclosed.

No. of Pages : 36 No. of Claims : 18

(12) PATENT APPLICATION PUBLICATION
(19) INDIA
(22) Date of filing of Application :29/08/2016
(21) Application No.201617029313 A
(43) Publication Date : 20/01/2017

(54) Title of the invention : COAL CO GASIFICATION METHOD

(51) International classification :C10J3/46
(31) Priority Document No :201410150394.9
(32) Priority Date :15/04/2014
(33) Name of priority country :China
(86) International Application No :PCT/CN2015/076344
Filing Date :10/04/2015
(87) International Publication No :WO 2015/158222
(61) Patent of Addition to Application Number :NA
Filing Date :NA
(62) Divisional to Application Number :NA
Filing Date :NA

(71)**Name of Applicant :**
1)ENN COAL GASIFICATION MINING CO. LTD.
Address of Applicant :Room 522 Building B Southern District Xin Ao Science and Technology Park HuaXiang Road Economic and Technology Development Zone LangFang Hebei 065001 China
(72)**Name of Inventor :**
1)CHEN Feng
2)PAN Xia

(57) Abstract :
A coal co-gasification method comprising the following steps: 1 fuel and a first pressurised oxygen containing gas are injected into a gasifier and the fuel is ignited so as to increase the temperature inside the gasifier; 2 when the temperature increase reaches a temperature capable of igniting coal water slurry to be injected injection of the fuel and the first pressurised oxygen containing gas is stopped and the coal water slurry and a second pressurised oxygen containing gas are injected into the gasifier so as to perform coal water slurry gasification; 3 once the coal water slurry gasification has stabilised a third pressurised oxygen containing gas and carbon dioxide carrying powdered coal are injected into the gasifier to perform co gasification. The method operates stably and overcomes cumbersome and time consuming adjustment steps in the prior art.

No. of Pages : 22 No. of Claims : 16

(12) PATENT APPLICATION PUBLICATION
(19) INDIA
(22) Date of filing of Application :29/08/2016
(21) Application No.201617029315 A
(43) Publication Date : 20/01/2017

(54) Title of the invention : FLOW CONDITIONING FLOW CONTROL DEVICE

(51) International classification :E21B43/08,E21B17/00,E21B21/08
(31) Priority Document No :61/979909
(32) Priority Date :15/04/2014
(33) Name of priority country :U.S.A.
(86) International Application No :PCT/US2015/025550
Filing Date :13/04/2015
(87) International Publication No :WO 2015/160695
(61) Patent of Addition to Application Number :NA
Filing Date :NA
(62) Divisional to Application Number :NA
Filing Date :NA

(71)**Name of Applicant :**
1)HALLIBURTON ENERGY SERVICES INC.
Address of Applicant :3000 N. Sam Houston Parkway E. Houston Texas 77032 3219 U.S.A.
(72)**Name of Inventor :**
1)YIN Weiqi
2)FELTEN Frederic Nicolas
3)GRECI Stephen Michael
4)LEAST Brandon Thomas

(57) Abstract :
A well screen assembly includes a tubing including a center bore and at least one aperture through the tubing between an outer radial surface of the tubing and an inner radial surface of the tubing; a filtration screen positioned around the tubing; a housing positioned around the tubing and including a fluid chamber in fluid communication with an outlet of the filtration screen; and a flow control device positioned in fluid communication with the outlet of the filtration screen and the at least one aperture to reduce a wall shear stress on at least one of the tubing or the at least one aperture.

No. of Pages : 23 No. of Claims : 36

(12) PATENT APPLICATION PUBLICATION
(21) Application No.201617028942 A
(19) INDIA
(22) Date of filing of Application :25/08/2016
(43) Publication Date : 20/01/2017

(54) Title of the invention : METHOD FOR PRODUCING OLEFIN OLIGOMER

(51) International classification :C07C2/08,C07C11/107,C08F2/00
(31) Priority Document No :2014034394
(32) Priority Date :25/02/2014
(33) Name of priority country :Japan
(86) International Application No :PCT/JP2015/055304
Filing Date :24/02/2015
(87) International Publication No :WO 2015/129712
(61) Patent of Addition to Application Number :NA
Filing Date :NA
(62) Divisional to Application Number :NA
Filing Date :NA

(71)**Name of Applicant :**
1)MITSUBISHI CHEMICAL CORPORATION
Address of Applicant :1 1 Marunouchi 1 chome Chiyoda ku Tokyo 1008251 Japan
(72)**Name of Inventor :**
1)TODA Satoshi
2)EMOTO Hiroki

(57) Abstract :
The present invention pertains to a method for producing an a olefin oligomer by conducting an oligomerization reaction of an a olefin in the presence of a solvent and a catalyst containing a transition metal containing compound an aluminum containing compound and hydrocarbons having two or more carbon atoms substituted by halogen atoms wherein: the method for producing an a olefin oligomer is provided with a reaction step a purification step and a cycling step for cycling unreacted raw material a olefin and solvent from the purification step to the reaction step; and the amount supplied from the cycling step to the reaction step of olefin having two or more carbon atoms substituted by halogen atoms is within a range from 0.1 to less than 200 (molar ratio) relative to the amount of transition metal in the reaction step.

No. of Pages : 43 No. of Claims : 9

(12) PATENT APPLICATION PUBLICATION
(19) INDIA
(22) Date of filing of Application :25/08/2016
(21) Application No.201617028958 A
(43) Publication Date : 20/01/2017

(54) Title of the invention : METHODS OF PREPARING METAL / METAL OXIDE MATERIALS FROM NANOSTRUCTURED SUBSTRATES AND USES THEREOF

(51) International classification :B01J37/02,B01J23/00,B82Y30/00
(31) Priority Document No :61/944876
(32) Priority Date :26/02/2014
(33) Name of priority country :U.S.A.
(86) International Application No :PCT/CA2015/000118
Filing Date :25/02/2015
(87) International Publication No :WO 2015/127538
(61) Patent of Addition to Application Number :NA
Filing Date :NA
(62) Divisional to Application Number :NA
Filing Date :NA

(71)**Name of Applicant :**
1)THE UNIVERSITY OF BRITISH COLUMBIA
Address of Applicant :University Industry Liaison Office #103 6190 Agronomy Road Vancouver British Columbia V6T 1Z3 Canada
(72)**Name of Inventor :**
1)MACLACHLAN Mark
2)WOLF Michael
3)ANANDHANATARAJAN Gomathi

(57) Abstract :
The invention provides a method of preparing a metal metal oxide material. In one aspect a nanostructure is provided the nanostructure comprising a first metal to form the metal oxide and a reaction surface with a reducing agent on the reaction surface. A second metal is deposited onto the reaction surface to form a bimetallic product. The bimetallic product is calcined to form the metal / metal oxide material.

No. of Pages : 22 No. of Claims : 27

(12) PATENT APPLICATION PUBLICATION
(19) INDIA
(22) Date of filing of Application :25/08/2016
(21) Application No.201617028959 A
(43) Publication Date : 20/01/2017

(54) Title of the invention : METHODS AND SYSTEMS FOR ALGORITHMICALLY SELECTED TRIVIA GAMING CONTENT

(51) International classification :A63F9/18,A63F13/61,A63F13/80
(31) Priority Document No :61/935044
(32) Priority Date :03/02/2014
(33) Name of priority country :U.S.A.
(86) International Application No :PCT/CA2015/000059
Filing Date :03/02/2015
(87) International Publication No :WO 2015/113146
(61) Patent of Addition to Application Number :NA
Filing Date :NA
(62) Divisional to Application Number :NA
Filing Date :NA

(71)**Name of Applicant :**
1)TIMEPLAY INC.
Address of Applicant :49 Bathurst Street #400 Toronto Ontario M5V 2P2 Canada
(72)**Name of Inventor :**
1)HUSSMAN Jonathan Ira
2)RACE John Andrew
3)GALIC Danny

(57) Abstract :
Various embodiments are described herein for methods and systems for operating a gaming management system. The gaming management system is configured to interface with at least one client system. In one example embodiment the gaming management system includes a processor configured to establish a database of participant records each participant record identifying trivia gaming content offered to the corresponding participant in one or more previous trivia gaming sessions; store the database of participant records in a memory; establish a database of trivia gaming content; store the database of trivia gaming content in the memory; receive from the at least one client system a request to participate in the current trivia gaming session; and dynamically generate a plurality of trivia gaming content items from the database of the trivia gaming content based on the trivia gaming content offered to the participants corresponding to the at least one client system in one or more previous trivia gaming sessions and at least one filtering condition.

No. of Pages : 19 No. of Claims : 17

(12) PATENT APPLICATION PUBLICATION
(21) Application No.201617028960 A
(19) INDIA
(22) Date of filing of Application :25/08/2016
(43) Publication Date : 20/01/2017

(54) Title of the invention : HYBRID NEUTRAL PLUG ON BAR WITH DISTRIBUTED PITCH

(51) International classification :H02B1/04
(31) Priority Document No :NA
(32) Priority Date :NA
(33) Name of priority country :NA
(86) International Application No :PCT/US2014/015044
Filing Date :06/02/2014
(87) International Publication No :WO 2015/119609
(61) Patent of Addition to Application Number :NA
Filing Date :NA
(62) Divisional to Application Number :NA
Filing Date :NA

(71)**Name of Applicant :**
1)SCHNEIDER ELECTRIC USA INC.
Address of Applicant :200 N. Martingale Road Suite 1000 Schaumburg Illinois 60173 U.S.A.
(72)**Name of Inventor :**
1)MITTELSTADT Chad
2)BROGHAMMER William

(57) Abstract :
A neutral bus bar 150 is provided for an electrical distribution apparatus such as an electrical panel 100. The neutral bus bar includes an elongated body 152 that includes a plurality of wire connectors 154 and plug on neutral landing sections 156 distributed along a length of the body. Each wire connector includes a side hole 172 and a top landing hole 184 on the body. The top landing hole can receive a hold down screw 176 to secure an electrical wire received in the side hole 172 from a wire type circuit breaker. Each plug on neutral landing section is able to receive a plug on neutral clip from a plug on neutral type circuit breaker. Adjacent plug on neutral landing sections have at least one wire connector arranged therebetween on the body. The plug on neutral landing sections are also distributed with a pitch spacing that corresponds to a pole spacing of circuit breakers connectable on the electrical distribution apparatus.

No. of Pages : 12 No. of Claims : 14

(12) PATENT APPLICATION PUBLICATION
(19) INDIA
(22) Date of filing of Application :26/08/2016

(21) Application No.201617029144 A
(43) Publication Date : 20/01/2017

(54) Title of the invention : NICOTINE POWDER INHALER

(51) International classification :A24F47/00
(31) Priority Document No :61/984967
(32) Priority Date :28/04/2014
(33) Name of priority country :U.S.A.
(86) International Application No :PCT/IB2015/000924
Filing Date :23/04/2015
(87) International Publication No :WO 2015/166344
(61) Patent of Addition to Application Number :NA
Filing Date :NA
(62) Divisional to Application Number :NA
Filing Date :NA

(71)**Name of Applicant :**
1)PHILIP MORRIS PRODUCTS S.A.
Address of Applicant :Quai Jeanrenaud 3 CH 2000 Neuchatel Switzerland
(72)**Name of Inventor :**
1)ZINOVIK Ihar Nikolaevich
2)ZUBER Gerard

(57) Abstract :
This disclosure relates to nicotine powder inhalers where the nicotine powder is delivered at air flow rates that mimic a smoking regime.

No. of Pages : 9 No. of Claims : 16

(12) PATENT APPLICATION PUBLICATION
(19) INDIA
(22) Date of filing of Application :26/08/2016
(21) Application No.201617029147 A
(43) Publication Date : 20/01/2017

(54) Title of the invention : TAU PEPTIDES ANTI TAU ANTIBODIES AND METHODS OF USE THEREOF

(51) International classification :A61K38/00,A61K39/00,G01N33/53
(31) Priority Document No :NA
(32) Priority Date :NA
(33) Name of priority country :NA
(86) International Application No :PCT/US2014/016597
Filing Date :14/02/2014
(87) International Publication No :WO 2015/122922
(61) Patent of Addition to Application Number :NA
Filing Date :NA
(62) Divisional to Application Number :NA
Filing Date :NA

(71)**Name of Applicant :**
1)IPIERIAN INC.
Address of Applicant :951 Gateway Blvd. South San Francisco California 94080 U.S.A.
(72)**Name of Inventor :**
1)GRISWOLD PRENNER Irene
2)PARRY Graham
3)BYUN Tony SangYoung

(57) Abstract :
Isolated tau peptides, and compositions comprising the peptides are disclosed. Further provided are antibodies specific for an isolated tau peptide. Methods of using the isolated tau peptide in diagnostic and treatment including using a pharmaceutical composition comprising the isolated tau peptide for stimulating an immune response in an individual to a tau peptide, and methods of using antibodies in detection, diagnosis, and treatment of disorders including a tauopathy are further provided.

No. of Pages : 152 No. of Claims : 86

(12) PATENT APPLICATION PUBLICATION
(21) Application No.201617029148 A
(19) INDIA
(22) Date of filing of Application :26/08/2016
(43) Publication Date : 20/01/2017

(54) Title of the invention : AMUSEMENT PARK DEVICE HAVING A RAIL GUIDED ROUTE COURSE AND HAVING AT LEAST ONE VEHICLE GUIDED ON THE RAIL

(51) International classification :A63G7/00,F16D55/226,F16D63/00
(31) Priority Document No :10 2014 104 659.5
(32) Priority Date :02/04/2014
(33) Name of priority country :Germany
(86) International Application No :PCT/EP2015/057356
Filing Date :02/04/2015
(87) International Publication No :WO 2015/150539
(61) Patent of Addition to Application Number :NA
Filing Date :NA
(62) Divisional to Application Number :NA
Filing Date :NA

(71)**Name of Applicant :**
1)MACK RIDES GMBH & CO. KG
Address of Applicant :Mauermattenstr. 4 79183 Waldkirch Germany
(72)**Name of Inventor :**
1)MARKUS Becherer
2)L„SSLE Timo

(57) Abstract :
The invention relates to an amusement park device comprising a rail guided route course and at least one vehicle guided on the rail (10) which vehicle has a brake apparatus (20) having at least one preferably two brake pads (40 50) fastened to a brake pad carrier (30) which brake pads are provided for braking or clamping the vehicle at a point of the rail guided route course during a braking event. According to the invention the brake apparatus (20) has a brake carrier (22) which is arranged on the vehicle in a stationary manner. In addition pivoting means are provided by means of which the brake pad carrier (30) and/or the at least two brake pads (40 50) can be pivoted in relation to the stationary brake carrier (22). The vehicle equipped with such a brake apparatus (20) can follow unevenness in the rail guided route course in a simple manner. The result is reliable braking behavior.

No. of Pages : 16 No. of Claims : 13

(12) PATENT APPLICATION PUBLICATION
(19) INDIA
(22) Date of filing of Application :26/08/2016
(21) Application No.201617029165 A
(43) Publication Date : 20/01/2017

(54) Title of the invention : QUALITATIVE PREDICTIVE METHOD FOR DIFFERENTIAL DIAGNOSIS OF PNEUMOCOCCIC MENINGOCOCCIC AND VIRAL MENIGITIS DIFFERENTIAL MENINGITIS DIAGNOSTIC METHOD AND KIT

(51) International classification :G01N33/53,G01N33/68,C12Q1/25
(31) Priority Document No :BR1020140046798
(32) Priority Date :27/02/2014
(33) Name of priority country :Brazil
(86) International Application No :PCT/BR2015/000021
Filing Date :24/02/2015
(87) International Publication No :WO 2015/127520
(61) Patent of Addition to Application Number :NA
Filing Date :NA
(62) Divisional to Application Number :NA
Filing Date :NA

(71)**Name of Applicant :**
1)FUNDA‡ƒO OSWALDO CRUZ (FIOCRUZ)
Address of Applicant :Av. Brasil 4365 Manguinhos 21045 900 Rio de Janeiro RJ Brazil
(72)**Name of Inventor :**
1)COIMBRA Roney Santos
2)PEREIRA Rosiane A da Silva
3)DE OLIVEIRA Guilherme Correa
4)CORDEIRO Ana Paula

(57) Abstract :
The present invention relates to a qualitative predictive method a method use and kit for the early differential diagnosis of prevalent forms of bacterial and viral meningitis which allow the various forms of meningitis to be detected and differentiated. The invention uses a qualitative predictive method based on the combined detection and sequential analysis of the presence or absence of at least three among four specific biomarkers.

No. of Pages : 40 No. of Claims : 12

(12) PATENT APPLICATION PUBLICATION
(19) INDIA
(22) Date of filing of Application :26/08/2016
(21) Application No.201617029170 A
(43) Publication Date : 20/01/2017

(54) Title of the invention : MACROCYCLES WITH AROMATIC P2 GROUPS AS FACTOR XIA INHIBITORS

(51) International classification :C07D471/08,C07D487/08,A61K31/529
(31) Priority Document No :61/933942
(32) Priority Date :31/01/2014
(33) Name of priority country :U.S.A.
(86) International Application No :PCT/US2015/013652
Filing Date :30/01/2015
(87) International Publication No :WO 2015/116885
(61) Patent of Addition to Application Number :NA
Filing Date :NA
(62) Divisional to Application Number :NA
Filing Date :NA

(71)**Name of Applicant :**
1)BRISTOL MYERS SQUIBB COMPANY
Address of Applicant :Route 206 and Province Line Road Princeton New Jersey 08543 U.S.A.
(72)**Name of Inventor :**
1)CORTE James R.
2)DE LUCCA Indawati
3)FANG Tianan
4)YANG Wu
5)WANG Yufeng
6)DILGER Andrew K.
7)PABBISETTY Kumar Balashanmuga
8)EWING William R.
9)ZHU Yeheng
10)WEXLER Ruth R.
11)PINTO Donald J. P.
12)ORWAT Michael J.
13)SMITH II Leon M.

(57) Abstract :
The present invention provides compounds of Formula (I): or stereoisomers tautomers or pharmaceutically acceptable salts thereof wherein all the variables are as defined herein. These compounds are selective factor XIa inhibitors or dual inhibitors of FXIa and plasma kallikrein. This invention also relates to pharmaceutical compositions comprising these compounds and methods of treating thromboembolic and/or inflammatory disorders using the same.

No. of Pages : 350 No. of Claims : 8

(12) PATENT APPLICATION PUBLICATION
(21) Application No.201617029171 A
(19) INDIA
(22) Date of filing of Application :26/08/2016
(43) Publication Date : 20/01/2017

(54) Title of the invention : HANDOVER IN INTEGRATED SMALL CELL AND WIFI NETWORKS

(51) International classification :H04W36/14
(31) Priority Document No :61/942900
(32) Priority Date :21/02/2014
(33) Name of priority country :U.S.A.
(86) International Application No :PCT/US2015/016867
Filing Date :20/02/2015
(87) International Publication No :WO 2015/127241
(61) Patent of Addition to Application Number :NA
Filing Date :NA
(62) Divisional to Application Number :NA
Filing Date :NA

(71)**Name of Applicant :**
1)CONVIDA WIRELESS LLC
Address of Applicant :200 Bellevue Parkway Suite 300 Wilmington DE 19809 3727 U.S.A.
(72)**Name of Inventor :**
1)LI Qing
2)STARSINIC Michael F.
3)TOMICI John L.
4)MOHAMED Ahmed

(57) Abstract :
Systems and methods are disclosed for inter-system mobility in integrated LTE and trusted WLAN access networks (TWAN). An X2 interface, adapted for both control plane and user plane communications, exists between an eNB and WLAN access point. A WLAN that has a UE attached thereto that is communicating with an EPC communicates over the X2 interface with an (H)eNB to handover communications from the WLAN to the (H)eNB. Similarly, an (H)eNB that has a UE attached thereto communicates over the X2 interface with a WLAN to handover communications from the (H)eNB to the WLAN.

No. of Pages : 56 No. of Claims : 20

(12) PATENT APPLICATION PUBLICATION
(19) INDIA
(22) Date of filing of Application :29/08/2016
(21) Application No.201617029320 A
(43) Publication Date : 20/01/2017

(54) Title of the invention : COMPOUNDS AS MODULATORS OF ROR GAMMA

(51) International classification :C07D475/10,A61K31/33
(31) Priority Document No :61/979231
(32) Priority Date :14/04/2014
(33) Name of priority country :U.S.A.
(86) International Application No :PCT/US2015/025328
Filing Date :10/04/2015
(87) International Publication No :WO 2015/160654
(61) Patent of Addition to Application Number :NA
Filing Date :NA
(62) Divisional to Application Number :NA
Filing Date :NA

(71)**Name of Applicant :**
1)BOEHRINGER INGELHEIM INTERNATIONAL GMBH
Address of Applicant :Binger Strasse 173 55216 Ingelheim am Rhein Germany
(72)**Name of Inventor :**
1)BAKONYI Johanna
2)BRUNETTE Steven Richard
3)COLLIN Delphine
4)HUGHES Robert Owen
5)LI Xiang
6)LIANG Shuang
7)SIBLEY Robert
8)TURNER Michael Robert
9)WU Lifen
10)ZHANG Qiang

(57) Abstract :
The present invention encompasses compounds of the formula (I) wherein the variables are defined herein which are suitable for the modulation of ROR and the treatment of diseases related to the modulation of ROR. The present invention also encompasses processes of making compounds of formula (I) and pharmaceutical preparations containing them.

No. of Pages : 170 No. of Claims : 15

(12) PATENT APPLICATION PUBLICATION
(19) INDIA
(22) Date of filing of Application :29/08/2016
(21) Application No.201617029321 A
(43) Publication Date : 20/01/2017

(54) Title of the invention : COMBINATION THERAPIES WITH ANTI CD38 ANTIBODIES

(51) International classification :C07K16/00
(31) Priority Document No :61/946002
(32) Priority Date :28/02/2014
(33) Name of priority country :U.S.A.
(86) International Application No :PCT/US2015/017420
Filing Date :25/02/2015
(87) International Publication No :WO 2015/130728
(61) Patent of Addition to Application Number :NA
Filing Date :NA
(62) Divisional to Application Number :NA
Filing Date :NA

(71)**Name of Applicant :**
1)JANSSEN BIOTECH INC.
Address of Applicant :800/850 Ridgeview Drive Horsham Pennsylvania 19044 U.S.A.
(72)**Name of Inventor :**
1)DOSHI Parul

(57) Abstract :
The present invention relates to combination therapies with anti CD38 antibodies.

No. of Pages : 44 No. of Claims : 23

(12) PATENT APPLICATION PUBLICATION
(19) INDIA
(22) Date of filing of Application :29/08/2016
(21) Application No.201617029322 A
(43) Publication Date : 20/01/2017

(54) Title of the invention : CHIMERIC ANTIGEN RECEPTOR

(51) International classification :C07K19/00,A61K39/395,A61P35/00
(31) Priority Document No :1403972.1
(32) Priority Date :06/03/2014
(33) Name of priority country :U.K.
(86) International Application No :PCT/GB2015/050649
Filing Date :06/03/2015
(87) International Publication No :WO 2015/132604
(61) Patent of Addition to Application Number :NA
Filing Date :NA
(62) Divisional to Application Number :NA
Filing Date :NA

(71)**Name of Applicant :**
1)UCL BUSINESS PLC
Address of Applicant :The Network Building 97 Tottenham Court Road London W1T 4TP U.K.
(72)**Name of Inventor :**
1)PUL‰ Martin
2)ANDERSON John
3)THOMAS Simon

(57) Abstract :
Provision of a chimeric antigen receptor (CAR) comprising a disialoganglioside (GD2)-binding domain which comprises a heavy chain variable region (VH) having complementarity determining regions (CDRs) with the following sequences: · b) a light chain variable region (VL) having CDRs with the following sequences: T cells expressing such a CAR are useful in the treatment of some cancers.

No. of Pages : 30 No. of Claims : 27

(12) PATENT APPLICATION PUBLICATION
(21) Application No.201617029323 A
(19) INDIA
(22) Date of filing of Application :29/08/2016
(43) Publication Date : 20/01/2017

(54) Title of the invention : INSTALLATION AND METHOD FOR COATING OBJECTS

(51) International classification :C25D13/22,C25D13/24
(31) Priority Document No :10 2014 006 795.5
(32) Priority Date :09/05/2014
(33) Name of priority country :Germany
(86) International Application No :PCT/EP2015/000714
Filing Date :01/04/2015
(87) International Publication No :WO 2015/169413
(61) Patent of Addition to Application Number :NA
Filing Date :NA
(62) Divisional to Application Number :NA
Filing Date :NA

(71)**Name of Applicant :**
1)EISENMANN SE
Address of Applicant :T¼binger Str. 81 71032 Bblingen Germany
(72)**Name of Inventor :**
1)BARWICH Roland

(57) Abstract :
An installation (10) for coating objects (12) in particular vehicle wheels has a dipping trough (14) which is filled with a coating liquid (16) into which the objects (12) can be dipped. In order to reduce the complexity of the piping of known installations of this type there is provided a combined recirculation and filtration circuit (30) for recirculating and filtering the coating liquid (16) wherein the recirculation and filtration circuit (30) comprises a pump (34) at least one recirculation outlet (70) arranged in the dipping trough (14) for the coating liquid (16) and a filtration device (48) having a residue connection (54) and a filtrate connection (56) wherein the residue connection (54) is connected to the at least one recirculation outlet (70) in the dipping trough (14).

No. of Pages : 11 No. of Claims : 10

(12) PATENT APPLICATION PUBLICATION
(19) INDIA
(22) Date of filing of Application :29/08/2016
(21) Application No.201617029324 A
(43) Publication Date : 20/01/2017

(54) Title of the invention : DEVICE FOR DETERMINING THE STATE OF A PERSON S SKIN

(51) International classification :A61B5/00
(31) Priority Document No :A50191/2014
(32) Priority Date :17/03/2014
(33) Name of priority country :Austria
(86) International Application No :PCT/AT2015/050064
Filing Date :13/03/2015
(87) International Publication No :WO 2015/139065
(61) Patent of Addition to Application Number :NA
Filing Date :NA
(62) Divisional to Application Number :NA
Filing Date :NA

(71)**Name of Applicant :**
1)AIT AUSTRIAN INSTITUTE OF TECHNOLOGY GMBH
Address of Applicant :Donau City Strae 1 1220 Wien Austria
(72)**Name of Inventor :**
1)OBERLEITNER Andreas
2)LURF Robert
3)MEINDL Michael
4)BEISTEINER Martin

(57) Abstract :
The invention relates to a device for determining the state of a persons skin and is characterized in that as a flat sheet that can be applied to the skin (9) and can be secured flat thereon it has a self adhesive film in particular skin plaster flat sheet (1) made of a non conductive film adapting the skin topography which film has a window like recess (2) passing transversely through it in particular for direct application of a cosmetic or medical formulation (91) from outside (as) onto the skin (9) wherein at least two contact electrodes (3; 3) are arranged as sensors on the skin side (hs) of the film in particular of the skin plaster flat sheet and can be applied to the skin in that the electrodes are further connected to an impedance and resistance and/or capacitance measurement unit (5) via a voltage supply unit (4) that can be supplied with current by means of NFC technology from which a preferably passive communications unit (6) with an antenna loop (7) issuing from it can be supplied with the measurement data which can be called up as skin resistance and/or capacitance data by means of NFC capable external communications unit with suitable App such as a mobile phone reader or smartphone.

No. of Pages : 10 No. of Claims : 8

(12) PATENT APPLICATION PUBLICATION
(19) INDIA
(22) Date of filing of Application :25/08/2016
(21) Application No.201617028961 A
(43) Publication Date : 20/01/2017

(54) Title of the invention : FORMING STATION AND METHOD FOR FORMING A HOT GLASS SHEET WITH TRANSVERSE CURVATURE

(51) International classification :C03B23/035,C03B23/03,C03B35/14
(31) Priority Document No :14/174245
(32) Priority Date :06/02/2014
(33) Name of priority country :U.S.A.
(86) International Application No :PCT/US2015/012566
Filing Date :23/01/2015
(87) International Publication No :WO 2015/119785
(61) Patent of Addition to Application Number :NA
Filing Date :NA
(62) Divisional to Application Number :NA
Filing Date :NA

(71)**Name of Applicant :**
1)GLASSTECH INC.
Address of Applicant :995 Fourth Street Ampoint Industrial Park Perrysburg Ohio 43551 U.S.A.
(72)**Name of Inventor :**
1)NITSCHKE Dean M.
2)NITSCHKE David B.

(57) Abstract :
A glass sheet press forming station (32) and method for press forming hot glass sheets with transverse curvature is performed by initially limiting the central forming of a glass sheet (G) between its end portions upon pickup from a roll conveyor to an upper mold (38) and prior to press forming with an associated lower mold (66) to prevent central area optical distortion of the press formed glass sheet.

No. of Pages : 13 No. of Claims : 17

(12) PATENT APPLICATION PUBLICATION
(21) Application No.201617028969 A
(19) INDIA
(22) Date of filing of Application :25/08/2016
(43) Publication Date : 20/01/2017

(54) Title of the invention : COMPOSITIONS FOR THE INACTIVATION OF VIRUS REPLICATION AND METHODS OF MAKING AND USING THE SAME

(51) International classification :C12N15/85
(31) Priority Document No :61/940883
(32) Priority Date :18/02/2014
(33) Name of priority country :U.S.A.
(86) International Application No :PCT/US2015/016354
Filing Date :18/02/2015
(87) International Publication No :WO 2015/126927
(61) Patent of Addition to Application Number :NA
Filing Date :NA
(62) Divisional to Application Number :NA
Filing Date :NA

(71)**Name of Applicant :**
1)DUKE UNIVERSITY
Address of Applicant :2812 Erwin Road Durham NC 27705 U.S.A.
2)EMORY UNIVERSITY
(72)**Name of Inventor :**
1)CULLEN Bryan R.
2)KENNEDY E. Matthew
3)BOGERD Hal P.
4)SCHINAZI Raymond F.
5)KORNEPATI Anand
6)MEFFERD Adam

(57) Abstract :
Provided herein are recombinant constructs vectors and expression cassettes including a first promoter which is suitably a tRNA promoter operably connected to a first polynucleotide encoding a first single guide RNA and a second promoter operably connected to a second polynucleotide encoding a Cas9 polypeptide. The first single guide RNA includes a first portion complementary to a strand of a target sequence of a DNA virus and a second portion capable of interacting with the Cas9 polypeptide. Also provided are codon optimized Staphylococcus aureus derived Cas9 polynucleotides and polypeptides with nuclear localization signals and optionally an epitope tag. Also provided are constructs for production of sgRNAs including a tRNA. Methods of inhibiting viral replication inhibiting expression of a target sequence from a virus or treating a viral infection or viral induced cancer using the compositions are also provided.

No. of Pages : 58 No. of Claims : 65

(12) PATENT APPLICATION PUBLICATION
(19) INDIA
(22) Date of filing of Application :25/08/2016

(21) Application No.201617028970 A
(43) Publication Date : 20/01/2017

(54) Title of the invention : GELATED IONIC LIQUID FILM COATED SURFACES AND USES THEREOF

(51) International classification :H01M10/0565,H01M8/18,H01M6/22
(31) Priority Document No :2014900359
(32) Priority Date :06/02/2014
(33) Name of priority country :Australia
(86) International Application No :PCT/AU2015/000062
Filing Date :06/02/2015
(87) International Publication No :WO 2015/117189
(61) Patent of Addition to Application Number :NA
Filing Date :NA
(62) Divisional to Application Number :NA
Filing Date :NA

(71)**Name of Applicant :**
1)GELION TECHNOLOGIES PTY LTD
Address of Applicant :c/o Omniwealth Services Pty Ltd. Level 22 Australia Square 264 George Street Sydney NSW 2000 Australia
(72)**Name of Inventor :**
1)MASCHMEYER Thomas
2)EASTON Max
3)WARD Antony

(57) Abstract :
The invention relates to an assembly comprising a first gelated ionic liquid film in contact with a first electrically conductive surface wherein the first gelated ionic liquid film comprises a first ionic liquid encapsulated within a gel matrix; and a second gelated ionic liquid film in contact with a second electrically conductive surface wherein the second gelated ionic liquid film comprises a second ionic liquid encapsulated within a gel matrix; wherein the first and second gelated ionic liquid films are in contact with each other. There is also described an electrochemical cell comprising an assembly according to the invention and methods for producing same.

No. of Pages : 51 No. of Claims : 31

(12) PATENT APPLICATION PUBLICATION
(21) Application No.201617028971 A
(19) INDIA
(22) Date of filing of Application :25/08/2016
(43) Publication Date : 20/01/2017

(54) Title of the invention : DISPERSING AGENT FOR SUSPENSION POLYMERIZATION OF VINYL COMPOUND

(51) International classification :C08F8/12,C08F2/20
(31) Priority Document No :2014020679
(32) Priority Date :05/02/2014
(33) Name of priority country :Japan
(86) International Application No :PCT/JP2015/053083
Filing Date :04/02/2015
(87) International Publication No :WO 2015/119144
(61) Patent of Addition to Application Number :NA
Filing Date :NA
(62) Divisional to Application Number :NA
Filing Date :NA

(71)**Name of Applicant :**
1)KURARAY CO. LTD.
Address of Applicant :1621 Sakazu Kurashiki shi Okayama 7100801 Japan
(72)**Name of Inventor :**
1)KUMAKI Yosuke
2)KUSUDOU Takeshi
3)FUJIOKA Shunsuke

(57) Abstract :
This dispersing agent for the suspension polymerization of a vinyl compound comprises a polyvinyl alcohol having a degree of saponification of 65-90 mol% and satisfying the belowmentioned formulae (1) to (3). As a result, the amount of large particles formed during polymerization is reduced, the particle size distribution is sharp, and it is possible to obtain a vinyl polymer having high absorptivity of a plasticizer. $0.4 \leq (MwUV/MwRI) \leq 0.95$ (1); $3 \leq (MwUV/MnUV) \leq 12$ (2); $0.1 \leq A220 \leq 0.8$ (3)

No. of Pages : 40 No. of Claims : 5

(12) PATENT APPLICATION PUBLICATION
(19) INDIA
(22) Date of filing of Application :25/08/2016
(21) Application No.201617028972 A
(43) Publication Date : 20/01/2017

(54) Title of the invention : METHOD FOR PRODUCING ESTERS OF 3 HYDROXYPROPIONIC ACID

(51) International classification :C12P7/62,C12N1/20,C12N5/00
(31) Priority Document No :1402173.7
(32) Priority Date :07/02/2014
(33) Name of priority country :U.K.
(86) International Application No :PCT/GB2015/050329
Filing Date :06/02/2015
(87) International Publication No :WO 2015/118341
(61) Patent of Addition to Application Number :NA
Filing Date :NA
(62) Divisional to Application Number :NA
Filing Date :NA

(71)**Name of Applicant :**
1)VERDANT BIOPRODUCTS LIMITED
Address of Applicant :11 Whittle Road Corby Northamptonshire NN17 5DX U.K.
(72)**Name of Inventor :**
1)FINNEGAN Irene

(57) Abstract :
Acetobacter lovaniensisThere is described a method for producing an ester of 3 hydroxypropionic acid the method comprising: culturing an bacterium in a growth medium containing phosphate at a level which is more than 1 g/litre wherein culturing of the bacterium produces the ester of 3 hydroxypropionic acid.

No. of Pages : 16 No. of Claims : 20

(12) PATENT APPLICATION PUBLICATION
(19) INDIA
(22) Date of filing of Application :26/08/2016
(21) Application No.201617029172 A
(43) Publication Date : 20/01/2017

(54) Title of the invention : TECHNIQUE FOR PHOTODISRUPTIVE MULTI PULSE TREATMENT OF A MATERIAL

(51) International classification :A61F9/008,A61B18/20,B23K26/00
(31) Priority Document No :NA
(32) Priority Date :NA
(33) Name of priority country :NA
(86) International Application No :PCT/EP2014/059306
Filing Date :07/05/2014
(87) International Publication No :WO 2015/169349
(61) Patent of Addition to Application Number :NA
Filing Date :NA
(62) Divisional to Application Number :NA
Filing Date :NA

(71)**Name of Applicant :**
1)WAVELIGHT GMBH
Address of Applicant :Am Wolfsmantel 5 91058 Erlangen Germany
(72)**Name of Inventor :**
1)VOGLER Klaus
2)DONITZKY Christof

(57) Abstract :
Embodiments of the invention provide a method and apparatus for laser processing a material. In the method and apparatus a diffraction limited beam of pulsed laser radiation is diffracted by a diffraction device to generate a diffracted beam of pulsed laser radiation. The diffracted beam is subsequently focused onto the material and is controlled in time and space to irradiate the material at a target position with radiation from a set of radiation pulses of the diffracted beam so that each radiation pulse from the set of radiation pulses is incident at the target position with a cross sectional portion of the diffracted beam the cross sectional portion including a local intensity maximum of the diffracted beam. The beam cross sectional portions of at least a subset of the pulses of the set include each a different local intensity maximum. In this way a multi pulse application for generating a photo disruption at a target location of the material can be implemented.

No. of Pages : 17 No. of Claims : 43

(12) PATENT APPLICATION PUBLICATION
(19) INDIA
(22) Date of filing of Application :26/08/2016
(21) Application No.201617029173 A
(43) Publication Date : 20/01/2017

(54) Title of the invention : DISTRIBUTED RADIO SYSTEM WITH REMOTE RADIO HEADS

(51) International classification :H04B10/27
(31) Priority Document No :61/948484
(32) Priority Date :05/03/2014
(33) Name of priority country :U.S.A.
(86) International Application No :PCT/US2015/018893
Filing Date :05/03/2015
(87) International Publication No :WO 2015/134714
(61) Patent of Addition to Application Number :NA
Filing Date :NA
(62) Divisional to Application Number :NA
Filing Date :NA

(71)**Name of Applicant :**
1)DALI SYSTEMS CO. LTD.
Address of Applicant :Maples Corporate Services Limited P.O. Box 309 Ugland House South Church Street George Town Grand Cayman Cayman Islands KY1 1104 Cayman Island
(72)**Name of Inventor :**
1)STAPLETON Shawn Patrick
2)TRAJKOVIC Sasa
3)WEBER Wolfgang

(57) Abstract :
A system for routing signals in a Distributed Antenna System includes a plurality of Digital Multiplexer Units (DMUs). The plurality of DMUs are coupled and operable to route signals between the plurality of DMUs. Each of the plurality of DMUs is operable to receive a digital signal from a base band unit (BBU). The system also includes a plurality of Digital Remote Units (DRUs) coupled to at least one of the plurality of DMUs and operable to transport signals between DRUs and the at least one of the plurality of DMUs.

No. of Pages : 24 No. of Claims : 20

(12) PATENT APPLICATION PUBLICATION
(21) Application No.201617029176 A
(19) INDIA
(22) Date of filing of Application :26/08/2016
(43) Publication Date : 20/01/2017

(54) Title of the invention : ULTRASONIC SURGICAL INSTRUMENT WITH REMOVABLE HANDLE ASSEMBLY

(51) International classification :A61B17/32
(31) Priority Document No :61/946168
(32) Priority Date :28/02/2014
(33) Name of priority country :U.S.A.
(86) International Application No :PCT/US2015/017178
Filing Date :24/02/2015
(87) International Publication No :WO 2015/130621
(61) Patent of Addition to Application Number :NA
Filing Date :NA
(62) Divisional to Application Number :NA
Filing Date :NA

(71)**Name of Applicant :**
1)ETHICON ENDO SURGERY INC.
Address of Applicant :4545 Creek Road Cincinnati Ohio 45242 U.S.A.
(72)**Name of Inventor :**
1)HIBNER John A.
2)NUCHOLS Richard P.
3)JOHNSON Gregory W.

(57) Abstract :
An apparatus comprises a body an ultrasonic transducer assembly a shaft assembly and a coupling assembly. The shaft assembly comprises an acoustic waveguide that is operable to selectively couple with the ultrasonic transducer assembly. The coupling assembly is operable to selectively transition between a first mode and a second mode. The acoustic waveguide is configured to rotate with the transducer assembly relative to the body when the coupling assembly is in the first mode. The acoustic waveguide is configured to rotate relative to the transducer assembly and relative to the body when the coupling assembly is in the second mode. The coupling assembly is further configured to prevent the transducer assembly from rotating relative to the body when the coupling assembly is in the second mode. The shaft assembly and the end effector are also together configured to transition between an operational mode and a cleaning mode.

No. of Pages : 54 No. of Claims : 20

(12) PATENT APPLICATION PUBLICATION
(21) Application No.201617029180 A
(19) INDIA
(22) Date of filing of Application :26/08/2016
(43) Publication Date : 20/01/2017

(54) Title of the invention : PHOSPHOROUS PROTECTING GROUPS AND METHODS OF PREPARATION AND USE THEREOF

(51) International classification :C07H19/16
(31) Priority Document No :61/986594
(32) Priority Date :30/04/2014
(33) Name of priority country :U.S.A.
(86) International Application No :PCT/US2015/028624
Filing Date :30/04/2015
(87) International Publication No :WO 2015/168461
(61) Patent of Addition to Application Number :NA
Filing Date :NA
(62) Divisional to Application Number :NA
Filing Date :NA

(71)**Name of Applicant :**
1)AGILENT TECHNOLOGIES INC.
Address of Applicant :5301 Stevens Creek Blvd. Ms: 1a pb Santa Clara California 95052 8059 U.S.A.
(72)**Name of Inventor :**
1)DELLINGER Douglas J.
2)MONFREGOLA Luca
3)CARUTHERS Marvin
4)ROY Mithum

(57) Abstract :
Aspects of the present disclosure include compositions that make use of phosphorus and/or nucleobase protecting groups which find use in the synthesis of long polynucleotides. Phosphorus protecting groups are provided that help increase the stepwise coupling yield and/or phosphorous protecting groups that can be removed during the oxidation step. Amidine nucleobase protecting groups are provided that find use in the subject compositions and methods which provides for e.g. increased resistance to depurination during polynucleotide synthesis. In some instances the methods and compositions disclosed herein utilize a combination of the phosphorus and amidine nucleobase protecting groups in the synthesis of polynucleotides having a sequence of 200 or more monomeric units in length. Also provided are methods for synthesizing a polynucleotide (e.g. a DNA) using one or more compounds disclosed herein.

No. of Pages : 76 No. of Claims : 51

(12) PATENT APPLICATION PUBLICATION
(21) Application No.201617029182 A
(19) INDIA
(22) Date of filing of Application :26/08/2016
(43) Publication Date : 20/01/2017

(54) Title of the invention : DEVICE FOR MANUALLY POURING FOAMING AND CARBONATED BEVERAGES

(51) International classification :B67D1/04,F16K11/00
(31) Priority Document No :NA
(32) Priority Date :NA
(33) Name of priority country :NA
(86) International Application No :PCT/RU2014/000263
Filing Date :10/04/2014
(87) International Publication No :WO 2015/156697
(61) Patent of Addition to Application Number :NA
Filing Date :NA
(62) Divisional to Application Number :NA
Filing Date :NA

(71)**Name of Applicant :**
1)BUCHIK Sergei Aleksandrovich
Address of Applicant :ul. Romanova 39 kv. 143 g. Novosibirsk 630091 Russia
(72)**Name of Inventor :**
1)BUCHIK Sergei Aleksandrovich

(57) Abstract :
The invention relates to the food industry and specifically to commercial equipment and can be used for dispensing beer and other foaming and carbonated beverages from an isobaric container. The device includes a drainage channel (3) which is connected by means of a three way flow switching device (2) to tubes for feeding gas and beverage a node (4) for securing the neck of a plastic bottle (5) to the open end of the drainage channel (3) and a control valve (11) which is connected to the drainage channel (3). The three way flow switching device (2) contains axially symmetric cavities (13 14) with seats and installed in the seats spring loaded valves (15 16) the stems (19 20) of which are kinematically connected to a shaped surface (21) of a rotating element (22). The rotating element (22) is rigidly connected to a control handle (23) for the alternating opening of the valves (15 16) or for ensuring that the valves (15 16) are in an initial closed state. The axially symmetric cavities (13 14) with seats are connected by means of inner channels (7 8) to the drainage channel (3) and to the tubes for feeding gas and beverage. The three way flow switching device (2) is installed in the housing of the device and can be removed therefrom. The axially symmetric cavities (13 14) with seats for accommodating the blocking components of the valves (15 16) are positioned in the inner channels (7 8) of the flow switching device (2) transversely relative to the channels (7 8). Portions of the stems (19 20) of the valves (15 16) with springs (17 18) are positioned and the rotating element (22) is positioned in the cavities of the inner channels (7 8) of the flow switching device (2). The valves (15 16) with stems (19 20) and the rotating element (22) which comes into contact with same are made of thermoplastic having an allowable compressive stress of 55 100 MPa and a surface of the stems (19 20) of the valves (15 16) which comes into contact with the shaped surface (21) of the rotating element (22) is developed in the form of a portion of a second order curve.

No. of Pages : 10 No. of Claims : 7

(12) PATENT APPLICATION PUBLICATION
(19) INDIA
(22) Date of filing of Application :26/08/2016
(21) Application No.201617029195 A
(43) Publication Date : 20/01/2017

(54) Title of the invention : APPARATUS AND METHOD FOR STARTING AN ENGINE USING A HYDRAULIC HYBRID DRIVETRAIN

(51) International classification :B60W30/18,B60K6/12,B60K6/46
(31) Priority Document No :61/972041
(32) Priority Date :28/03/2014
(33) Name of priority country :U.S.A.
(86) International Application No :PCT/EP2015/052217
Filing Date :03/02/2015
(87) International Publication No :WO 2015/144349
(61) Patent of Addition to Application Number :NA
Filing Date :NA
(62) Divisional to Application Number :NA
Filing Date :NA

(71)**Name of Applicant :**
1)DANA ITALIA SPA
Address of Applicant :Localit Linfano Zona Industriale I 38062 Arco (TN) Italy
(72)**Name of Inventor :**
1)ORNELLA Giulio
2)ZENDRI Fabrizio

(57) Abstract :
The claimed subject matter relates to a series hydraulic hybrid driveline (1) for a vehicle comprising: a hydraulic circuit (8) comprising a first hydraulic displacement unit (4) in fluid communication with a second hydraulic displacement unit (5) the first hydraulic displacement unit (4) having a variable hydraulic displacement and the first hydraulic displacement unit (4) being drivingly engaged with an internal combustion engine (3); a hydraulic accumulator assembly selectively fluidly connected to the hydraulic circuit (8) the hydraulic accumulator assembly comprising a high pressure hydraulic accumulator (6a) and a low pressure hydraulic accumulator (6b); and a hydraulic actuator (12) adapted to control the hydraulic displacement of the first hydraulic displacement unit (4) the hydraulic actuator (12) being in fluid communication with the hydraulic accumulator assembly and/or with the hydraulic circuit (8). The claimed subject matter further relates to a method of shutting down an engine (3) of a series hydraulic hybrid driveline (1) and of re starting the engine (3) of a series hydraulic hybrid driveline (1) using energy stored in a hydraulic accumulator assembly.

No. of Pages : 23 No. of Claims : 15

(12) PATENT APPLICATION PUBLICATION
(19) INDIA
(22) Date of filing of Application :29/08/2016
(21) Application No.201617029325 A
(43) Publication Date : 20/01/2017

(54) Title of the invention : GLYCOTARGETING THERAPEUTICS

(51) International classification :A61K39/00,A61K47/48
(31) Priority Document No :61/942942
(32) Priority Date :21/02/2014
(33) Name of priority country :U.S.A.
(86) International Application No :PCT/IB2015/001145
Filing Date :20/02/2015
(87) International Publication No :WO 2015/140648
(61) Patent of Addition to Application Number :NA
Filing Date :NA
(62) Divisional to Application Number :NA
Filing Date :NA

(71)**Name of Applicant :**
1)ECOLE POLYTECHNIQUE FEDERAIE DE LAUSANNE (EPFL)
Address of Applicant :EPFL Innovation Park J CH 1015 Lausanne Switzerland
2)ANOKION SA
(72)**Name of Inventor :**
1)HUBBELL Jeffrey A.
2)KONTOS Stephane
3)LORENTZ Kristen Marie
4)WILSON David Scott
5)GAI Shuning

(57) Abstract :
Glycotargeting therapeutics are useful in the treatment of transplant rejection autoimmune disease food allergy and immune response against a therapeutic agent.

No. of Pages : 94 No. of Claims : 32

(12) PATENT APPLICATION PUBLICATION
(19) INDIA
(22) Date of filing of Application :29/08/2016
(21) Application No.201617029326 A
(43) Publication Date : 20/01/2017

(54) Title of the invention : NOVEL COMPOUNDS

(51) International classification :C07D401/14,A61K31/427,A61K31/433
(31) Priority Document No :61/968172
(32) Priority Date :20/03/2014
(33) Name of priority country :U.S.A.
(86) International Application No :PCT/EP2015/055629
Filing Date :18/03/2015
(87) International Publication No :WO 2015/140195
(61) Patent of Addition to Application Number :NA
Filing Date :NA
(62) Divisional to Application Number :NA
Filing Date :NA

(71)**Name of Applicant :**
1)BAYER PHARMA AKTIENGESELLSCHAFT
Address of Applicant :M¼llerstr. 178 13353 Berlin Germany
(72)**Name of Inventor :**
1)THEDE Kai
2)BENDER Eckhard
3)SCOTT William
4)GIESE Anja
5)ZORN Ludwig
6)LIU Ningshu
7)M–NNING Ursula
8)SIEGEL Franziska
9)GOLZ Stefan
10)H„GEBARTH Andrea
11)LIENAU Philip
12)PUEHLER Florian
13)BASTING Daniel
14)SCHNEIDER Dirk
15)M–WES Manfred
16)GEISLER Jens

(57) Abstract :
The present invention relates to inhibitors of the Wnt signalling pathways of general formula (I) as described and defined herein to methods of preparing said compounds to intermediate compounds useful for preparing said compounds to pharmaceutical compositions and combinations comprising said compounds and to the use of said compounds for manufacturing a pharmaceutical composition for the treatment or prophylaxis of a disease in particular of a hyper proliferative disorder as a sole agent or in combination with other active ingredients.

No. of Pages : 212 No. of Claims : 18

(12) PATENT APPLICATION PUBLICATION
(21) Application No.201617029327 A
(19) INDIA
(22) Date of filing of Application :29/08/2016
(43) Publication Date : 20/01/2017

(54) Title of the invention : METHOD FOR THE PREPARATION OF N [(6 CHLOROPYRIDINO 3 YL)METHYL] 2 2 DIFLUOROETHANE 1 AMINE BY THE ALKYLATION OF 2 2 DIFLUOROETHYLAMINE

(51) International classification :C07D213/61
(31) Priority Document No :14161110.3
(32) Priority Date :21/03/2014
(33) Name of priority country :EPO
(86) International Application No :PCT/EP2015/055639
Filing Date :18/03/2015
(87) International Publication No :WO 2015/140198
(61) Patent of Addition to Application Number :NA
Filing Date :NA
(62) Divisional to Application Number :NA
Filing Date :NA

(71)**Name of Applicant :**
1)BAYER CROPSCIENCE AKTIENGESELLSCHAFT
Address of Applicant :Alfred Nobel Str. 50 40789 Monheim am Rhein Germany
(72)**Name of Inventor :**
1)MORADI Wahed Ahmed
2)SCHLEGEL G¼nter
3)SCHNATTERER Albert

(57) Abstract :
The invention relates to a method for the preparation of N-[(6-chloropyridino-3-yl)methyl]-2,2-difluoroethane-l-amine of formula (III) wherein the 2,2-difluoroethylamine of formula (I) is reacted with a halide of formula (II) in the presence of a hydroxide of an alkali metal or alkaline earth metal.

No. of Pages : 13 No. of Claims : 6

(12) PATENT APPLICATION PUBLICATION
(21) Application No.201617029328 A
(19) INDIA
(22) Date of filing of Application :29/08/2016
(43) Publication Date : 20/01/2017

(54) Title of the invention : COOLED STORAGE SYSTEM

(51) International classification :B65G1/04,F25D13/04
(31) Priority Document No :20140216
(32) Priority Date :19/02/2014
(33) Name of priority country :Norway
(86) International Application No :PCT/EP2015/053390
Filing Date :18/02/2015
(87) International Publication No :WO 2015/124610
(61) Patent of Addition to Application Number :NA
Filing Date :NA
(62) Divisional to Application Number :NA
Filing Date :NA

(71)**Name of Applicant :**
1)JAKOB HATTELAND LOGISTICS AS
Address of Applicant :Stokkastrandvegen 85 5578 Nedre Vats Norway
(72)**Name of Inventor :**
1)HOGNALAND Ingvar

(57) Abstract :
A cooled storage system comprises a grid structure (20) of storage cells where each cell is arranged to accommodate a vertical stack of storage bins and having a top level at least one remotely operated vehicle (27) arranged to move at the top level of the grid structure (20) and receive a bin from a storage cell at the top level of the grid structure (20) where there is provided thermal insulation between at least a section of the grid structure (20) and the remotely operated vehicle (27) and said section of the grid structure (20) has a temperature that is lower than the temperature of the remotely operated vehicle (27).

No. of Pages : 6 No. of Claims : 9

(12) PATENT APPLICATION PUBLICATION
(19) INDIA
(22) Date of filing of Application :29/08/2016
(21) Application No.201617029353 A
(43) Publication Date : 20/01/2017

(54) Title of the invention : COMPOSITION

(51) International classification :C09D7/00
(31) Priority Document No :14153521.1
(32) Priority Date :31/01/2014
(33) Name of priority country :EPO
(86) International Application No :PCT/GB2015/050220
Filing Date :30/01/2015
(87) International Publication No :WO 2015/114349
(61) Patent of Addition to Application Number :NA
Filing Date :NA
(62) Divisional to Application Number :NA
Filing Date :NA

(71)**Name of Applicant :**
1)CATEXEL LIMITED
Address of Applicant :TMF Corporate Administration Services Limited 5th Floor 6 St Andrew Street London EC4A 3AE U.K.
(72)**Name of Inventor :**
1)DE BOER Johannes Wietse
2)MAAIJEN Karin
3)HAGE Ronald

(57) Abstract :
The present invention relates to an oxidatively curable coating composition with which a formulation for use in catalysing the curing of oxidatively curable coating compositions, in particular oxidatively curable coating compositions comprising an oxidatively curable alkyd-based resin, has been contacted. The formulations described herein comprise a triazacyclononane-based chelant; a manganese (II), (III) or (IV) salt; and an alcohol or ketone, which alcohol or ketone typically acts as a solvent for the salt and the chelant. The invention also relates to preparing the oxidatively curable coating compositions of the invention, such coating compositions once cured and methods comprising applying such coating compositions to a substrate.

No. of Pages : 35 No. of Claims : 15

(12) PATENT APPLICATION PUBLICATION
(21) Application No.201617029355 A
(19) INDIA
(22) Date of filing of Application :29/08/2016
(43) Publication Date : 20/01/2017

(54) Title of the invention : FRICTION CLUTCH ACTUATED BY CENTRIFUGAL FORCE

(51) International classification :F16D43/12,F16D43/18
(31) Priority Document No :10 2014 204 567.3
(32) Priority Date :12/03/2014
(33) Name of priority country :Germany
(86) International Application No :PCT/DE2015/200086
Filing Date :20/02/2015
(87) International Publication No :WO 2015/135540
(61) Patent of Addition to Application Number :NA
Filing Date :NA
(62) Divisional to Application Number :NA
Filing Date :NA

(71)**Name of Applicant :**
1)SCHAEFFLER TECHNOLOGIES AG & CO. KG
Address of Applicant :Industriestrae 1 3 91074 Herzogenaurach Germany
(72)**Name of Inventor :**
1)CHAMBRION Martin
2)RUF Johannes

(57) Abstract :
A friction clutch (1) actuated by centrifugal force having an input part (2) which is driven in rotation about an axis of rotation (d) and having an output part (3) which is connectable to said input part in frictionally engaging fashion by generation of frictional engagement wherein friction partners (11 12) of the input part and of the output part can be braced axially against one another by means of an actuating device (14) which is controlled by centrifugal force by way of centrifugal masses (18) and a disengagement device (23) which is actuated by a driver is provided for the purposes of opening when the friction clutch has been closed by centrifugal force. In order that the friction clutch can be operated as an automated starting clutch and as a gearshift clutch actuated by the driver the actuating device has a pressure plate (15) which preloads the friction partners in a manner dependent on a rotational speed of the input part a support flange which is preloaded relative to the input part axially in the direction of the friction partners by means of a first energy store and centrifugal masses which are arranged between the pressure plate and support flange (16) and which under the action of centrifugal force space said pressure plate and support flange apart axially counter to the action of a second energy store.

No. of Pages : 12 No. of Claims : 10

(12) PATENT APPLICATION PUBLICATION
(19) INDIA
(22) Date of filing of Application :25/08/2016
(21) Application No.201617028973 A
(43) Publication Date : 20/01/2017

(54) Title of the invention : TOKENIZING AUTHORIZATIONS

(51) International classification :G06Q30/06
(31) Priority Document No :14/169024
(32) Priority Date :30/01/2014
(33) Name of priority country :U.S.A.
(86) International Application No :PCT/US2015/011206
Filing Date :13/01/2015
(87) International Publication No :WO 2015/116376
(61) Patent of Addition to Application Number :NA
Filing Date :NA
(62) Divisional to Application Number :NA
Filing Date :NA

(71)**Name of Applicant :**
1)APPLE INC.
Address of Applicant :1 Infinite Loop Cupertino CA 95014 U.S.A.
(72)**Name of Inventor :**
1)GEFFON Michael H.
2)ROBINSON Amanda L.

(57) Abstract :
Disclosed herein are systems methods and non transitory computer readable storage media for creating sharable tokens that point to financial information stored in a secure online platform and that can be used in financial transactions.

No. of Pages : 25 No. of Claims : 20

(12) PATENT APPLICATION PUBLICATION
(19) INDIA
(22) Date of filing of Application :25/08/2016
(21) Application No.201617028974 A
(43) Publication Date : 20/01/2017

(54) Title of the invention : SERUM CHOLESTEROL LOWERING EDIBLE PRODUCT

(51) International classification :A23L1/30,A61K31/575,A61P3/06
(31) Priority Document No :14000748.5
(32) Priority Date :03/03/2014
(33) Name of priority country :EPO
(86) International Application No :PCT/EP2015/000476
Filing Date :03/03/2015
(87) International Publication No :WO 2015/131995
(61) Patent of Addition to Application Number :NA
Filing Date :NA
(62) Divisional to Application Number :NA
Filing Date :NA

(71)**Name of Applicant :**
1)RAISIO NUTRITION LTD
Address of Applicant :Raisionkaari 55 FIN 21200 Raisio Finland
(72)**Name of Inventor :**
1)WESTER Ingmar
2)KUUSISTO Pivi
3)NIEMEL„ Jouni
4)F–RBOM Tuula
5)DRAGET Kurt I.
6)SIWEK Andrzej
7)LUNDHAUG Kamilla
8)OLSEN Jan Erik

(57) Abstract :
The present invention relates to a serum LDL cholesterol lowering edible product containing plant sterol ester and/or plant stanol ester and especially to a dietary supplement product.

No. of Pages : 64 No. of Claims : 65

(12) PATENT APPLICATION PUBLICATION
(21) Application No.201617028984 A
(19) INDIA
(22) Date of filing of Application :25/08/2016
(43) Publication Date : 20/01/2017

(54) Title of the invention : FLUID REGULATOR WITH BALANCING SYSTEM

(51) International classification :G05D16/06
(31) Priority Document No :61/944382
(32) Priority Date :25/02/2014
(33) Name of priority country :U.S.A.
(86) International Application No :PCT/US2015/017422
Filing Date :25/02/2015
(87) International Publication No :WO 2015/130730
(61) Patent of Addition to Application Number :NA
Filing Date :NA
(62) Divisional to Application Number :NA
Filing Date :NA

(71)**Name of Applicant :**
1)EMERSON PROCESS MANAGEMENT REGULATOR TECHNOLOGIES INC.
Address of Applicant :3200 Emerson Way McKinney TX 75070 U.S.A.
(72)**Name of Inventor :**
1)LIN Chun
2)GAAL Alexandru
3)TRIPON Horatiu P.

(57) Abstract :
A fluid regulator includes an actuator a body assembly and a balancing system disposed between the actuator assembly and the body assembly. The actuator assembly includes an upper casing a lower casing secured to the upper casing and a diaphragm assembly disposed between the upper and lower casings. The body assembly includes a stem assembly operatively connected to the diaphragm assembly to move with the diaphragm assembly. The balancing system includes a diaphragm operatively connected to the stem assembly to move with the stem assembly. The lower casing of the actuator assembly includes a wall defining a portion of a balancing cavity that receives the balancing system and an inner surface that ends at a shoulder and has an annular groove formed therein that receives a portion of the diaphragm as the fluid regulator moves from a fully open position to a lockup position so as to increase the cross sectional area of the diaphragm.

No. of Pages : 16 No. of Claims : 19

(12) PATENT APPLICATION PUBLICATION
(19) INDIA
(22) Date of filing of Application :25/08/2016
(21) Application No.201617028986 A
(43) Publication Date : 20/01/2017

(54) Title of the invention : PERCUTANEOUS SYSTEM DEVICES AND METHODS

(51) International classification :A61M1/12,A61M1/125
(31) Priority Document No :20140353
(32) Priority Date :17/03/2014
(33) Name of priority country :Norway
(86) International Application No :PCT/EP2015/055578
Filing Date :17/03/2015
(87) International Publication No :WO 2015/140179
(61) Patent of Addition to Application Number :NA
Filing Date :NA
(62) Divisional to Application Number :NA
Filing Date :NA

(71)**Name of Applicant :**
1)NUHEART AS
Address of Applicant :Strandgaten 18 5013 Bergen Norway
(72)**Name of Inventor :**
1)TUSETH Vegard

(57) Abstract :
The present invention relates to a transcatheter method for providing fluid communication between two anatomical compartments. The present invention also relates to a transcatheter system comprising an intracorporeal connector for fluid communication between two anatomical compartments through at least one anatomical wall wherein said connector is adapted to receive a flow regulating device a connector a flow regulating device and an insertion device.

No. of Pages : 41 No. of Claims : 111

(12) PATENT APPLICATION PUBLICATION
(19) INDIA
(22) Date of filing of Application :25/08/2016
(21) Application No.201617028987 A
(43) Publication Date : 20/01/2017

(54) Title of the invention : HEAT SOURCE DEVICE

(51) International classification :F24F11/02,F25B1/00
(31) Priority Document No :2014030530
(32) Priority Date :20/02/2014
(33) Name of priority country :Japan
(86) International Application No :PCT/JP2015/054612
Filing Date :19/02/2015
(87) International Publication No :WO 2015/125863
(61) Patent of Addition to Application Number :NA
Filing Date :NA
(62) Divisional to Application Number :NA
Filing Date :NA

(71)**Name of Applicant :**
1)TOSHIBA CARRIER CORPORATION
Address of Applicant :72 34 Horikawa cho Saiwai ku Kawasaki shi Kanagawa 2128585 Japan
(72)**Name of Inventor :**
1)MATSUMOTO Yuuji
2)TSUKIYAMA Seiji

(57) Abstract :
In the present invention a controller controls the operating number of a plurality of heat source apparatus and the flow volume of a heat medium towards a load side in response to the required capability of the load side. The controller detects the volume of the heat medium flowing to the load side and controls the bypass volume of the heat medium flowing towards the load side in response to the detected flow volume. The controller distributes and allocates the detected flow volume to each operating heat source apparatus and controls the pump capability in each operating heat source apparatus in response to the allocated flow volumes.

No. of Pages : 22 No. of Claims : 10

(12) PATENT APPLICATION PUBLICATION
(19) INDIA
(22) Date of filing of Application :25/08/2016
(21) Application No.201617028988 A
(43) Publication Date : 20/01/2017

(54) Title of the invention : PLASTICS CAN AND METHOD FOR MANUFACTURING SAME

(51) International classification :B65D17/00,B65D51/22,B65D47/08
(31) Priority Document No :14157082.0
(32) Priority Date :27/02/2014
(33) Name of priority country :EPO
(86) International Application No :PCT/IB2015/051470
Filing Date :27/02/2015
(87) International Publication No :WO 2015/128847
(61) Patent of Addition to Application Number :NA
Filing Date :NA
(62) Divisional to Application Number :NA
Filing Date :NA

(71)**Name of Applicant :**
1)ESTAVAYER LAIT SA
Address of Applicant :Route de Payerne 2 4 1470 Estavayer le Lac Switzerland
(72)**Name of Inventor :**
1)MATTHEW Robin
2)GASSER Daniel
3)BAUMGARTNER Alex
4)MATHYER Jer´me
5)MAERKY Robert
6)GEILLON Karine
7)RIME Sbastien

(57) Abstract :
The present invention relates to a can (1) made substantially of plastics material and containing a sterile beverage. The can has a container (2) with a cylindrical body and an upper part with an opening (19). The opening of the container is hermetically sealed by a cover (10) made of a metal and plastic complex. A cap (3) having a cylindrical side wall and a piercing device (5) is attached to the container. Preferably the cap has a closable lid (4). The container cap assembly has the appearance of a can.

No. of Pages : 48 No. of Claims : 21

(12) PATENT APPLICATION PUBLICATION
(19) INDIA
(22) Date of filing of Application :26/08/2016
(21) Application No.201617029196 A
(43) Publication Date : 20/01/2017

(54) Title of the invention : SURGICAL DEVICES WITH ARTICULATING END EFFECTORS

(51) International classification :A61B17/29,A61B17/00
(31) Priority Document No :14/230027
(32) Priority Date :31/03/2014
(33) Name of priority country :U.S.A.
(86) International Application No :PCT/US2015/018632
Filing Date :04/03/2015
(87) International Publication No :WO 2015/153042
(61) Patent of Addition to Application Number :NA
Filing Date :NA
(62) Divisional to Application Number :NA
Filing Date :NA

(71)**Name of Applicant :**
1)ETHICON ENDO SURGERY INC.
Address of Applicant :4545 Creek Road Cincinnati Ohio 45242 U.S.A.
(72)**Name of Inventor :**
1)SHELTON Frederick E. IV
2)BAXTER Chester O. III
3)SCHEIB Charles J.
4)JOHNSON Gregory W.
5)DUGAN John R.

(57) Abstract :
Methods and devices for using surgical devices with articulating end effectors are provided. Surgical devices with articulating end effectors can provide rotary driven pivoting of the end effector. In some embodiments the device can include a handle a first and a second tube extending from the handle the second tube disposed within the first tube and an end effector that includes a pair of distal jaws configured to move in response to rotation of the first tube about a longitudinal axis thereof and rotation of the second tube about a longitudinal axis thereof. The jaws can move in two different ways depending on whether the first and second tubes are rotating in a same direction as one another or in different ways than each other. The jaws can open/close and articulate using the same mechanical mechanism. The device can be powered or the device can be non powered.

No. of Pages : 29 No. of Claims : 25

(12) PATENT APPLICATION PUBLICATION
(21) Application No.201617029200 A
(19) INDIA
(22) Date of filing of Application :26/08/2016
(43) Publication Date : 20/01/2017

(54) Title of the invention : CYLINDER HEAD GASKET FOR HIGH LOAD AND MOTION APPLICATIONS

(51) International classification :F16J15/08
(31) Priority Document No :14/179961
(32) Priority Date :13/02/2014
(33) Name of priority country :U.S.A.
(86) International Application No :PCT/US2015/015198
Filing Date :10/02/2015
(87) International Publication No :WO 2015/123197
(61) Patent of Addition to Application Number :NA
Filing Date :NA
(62) Divisional to Application Number :NA
Filing Date :NA

(71)**Name of Applicant :**
1)FEDERAL MOGUL CORPORATION
Address of Applicant :27300 West 11 Mile Road Tower 300 Metro Office Complex Southfield MI 48034 U.S.A.
(72)**Name of Inventor :**
1)HABERER Tyler
2)OKANO Takashi
3)VIALARD Daniel J.

(57) Abstract :
A cylinder head gasket including at least three functional layers and at least two stoppers is provided. The first functional layer (24) includes a first full bead (26) extending around a combustion chamber opening and axially aligned with a second fun bead (30) of the second functional layer 28). The first stopper (32) extends along the first functional layer between the combustion chamber opening and the first full bead for preventing over compression of the first full bead. The second stopper (34) is located beneath the second full bead of the second functional layer for increasing load on the second full bead reducing head lift and promoting an even distribution of the load. The second stopper is not attached to the second functional layer along and adjacent the second fun bead and thus an air gap is present between the second stopper and the second full bead when the gasket is not compressed.

No. of Pages : 14 No. of Claims : 20

(12) PATENT APPLICATION PUBLICATION
(21) Application No.201617029201 A
(19) INDIA
(22) Date of filing of Application :26/08/2016
(43) Publication Date : 20/01/2017

(54) Title of the invention : DEVICE AND MECHANISM FOR FACILITATING NON INVASIVE NON PIERCING MONITORING OF BLOOD HEMOGLOBIN

(51) International classification :A61B5/1455
(31) Priority Document No :61/946576
(32) Priority Date :28/02/2014
(33) Name of priority country :U.S.A.
(86) International Application No :PCT/US2014/041789
Filing Date :10/06/2014
(87) International Publication No :WO 2015/130333
(61) Patent of Addition to Application Number :NA
Filing Date :NA
(62) Divisional to Application Number :NA
Filing Date :NA

(71)**Name of Applicant :**
1)TECH4LIFE ENTERPRISES CANADA INC.
Address of Applicant :3194 Robert Brown Boulevard Oakville Ontario L6M 0P2 Canada
(72)**Name of Inventor :**
1)TIRMIZI Syeda Suha

(57) Abstract :
A mechanism is described for facilitating non invasive and non skin piercing monitoring of blood hemoglobin according to one embodiment. A method of embodiments as described herein includes receiving a body part including a finger where the body part in the placement area causes one or more sets of interruptions in the running of a light where each set of interruptions includes a plurality of interruptions and detecting initial readings corresponding to interruptions of the one or more sets of interruptions the initial readings including signals where an analog signal is generated each time the light is interrupted while passing through the body part. The method may further include calculating absolute values based on average raw values where calculating includes computing an average absolute value based on the absolute values and computing a final hemoglobin reading based on the average absolute value.

No. of Pages : 34 No. of Claims : 21

(12) PATENT APPLICATION PUBLICATION
(21) Application No.201617029202 A
(19) INDIA
(22) Date of filing of Application :26/08/2016
(43) Publication Date : 20/01/2017

(54) Title of the invention : NON KINKING WRAPPABLE KNIT SLEEVE AND METHOD OF CONSTRUCTION THEREOF

(51) International classification :D04B21/20,D04B1/22
(31) Priority Document No :61/942473
(32) Priority Date :20/02/2014
(33) Name of priority country :U.S.A.
(86) International Application No :PCT/US2015/016836
Filing Date :20/02/2015
(87) International Publication No :WO 2015/127216
(61) Patent of Addition to Application Number :NA
Filing Date :NA
(62) Divisional to Application Number :NA
Filing Date :NA

(71)**Name of Applicant :**
1)FEDERAL MOGUL POWERTRAIN LLC
Address of Applicant :27300 West 11 Mile Road Southfield MI 48034 U.S.A.
(72)**Name of Inventor :**
1)WOODRUFF Alexa A.
2)MALLOY Cassie M.

(57) Abstract :
A warp knit textile sleeve (10, 110, 210) is provided. The sleeve (10, 110, 210) has an elongate, wrappable wall (14, 114, 214) extending along a longitudinal axis between opposite ends (18, 20). The wall has opposite free edges (22, 24) extending lengthwise along the longitudinal axis (16) between the opposite ends (22, 24). The wall (14, 114, 214) is knit from at least one warp yarn (26, 26) extending lengthwise between the opposite ends (18, 20) and a plurality of weft yarns (28, 29) extending circumferentially between the opposite free edges (22, 24). The weft yarns (28, 29) form a plurality of discrete, annular bands (A, B, C) alternating in adjacent relation along the longitudinal axis (16). The weft yarn (28) of one of the adjacent bands (A) has a first diameter and the weft yarn (29) of the other of the adjacent bands (B, C) has a second diameter, wherein the first diameter is less than the second diameter.

No. of Pages : 13 No. of Claims : 30

(12) PATENT APPLICATION PUBLICATION
(19) INDIA
(22) Date of filing of Application :29/08/2016
(21) Application No.201617029359 A
(43) Publication Date : 20/01/2017

(54) Title of the invention : METHODS AND APPARATUS FOR ANALYSING EMBRYO DEVELOPMENT

(51) International classification :G06K9/00,C12M1/34,G06F3/00
(31) Priority Document No :1404554.6
(32) Priority Date :14/03/2014
(33) Name of priority country :U.K.
(86) International Application No :PCT/EP2015/052991
Filing Date :12/02/2015
(87) International Publication No:WO 2015/135718
(61) Patent of Addition to Application Number :NA
Filing Date :NA
(62) Divisional to Application Number :NA
Filing Date :NA

(71)**Name of Applicant :**
1)UNISENSE FERTILITECH A/S
Address of Applicant :Tueager 1 DK 8200 Aarhus N Denmark
(72)**Name of Inventor :**
1)PAARUP KYLLING Anton
2)BERNTSEN J¸rgen
3)RAMSING Niels
4)PORSGAARD S¸ren
5)QVISTGAARD KAJH˜J Tine
6)BERGHOLD KUHLMANN Reidun

(57) Abstract :
Apparatus and methods for helping a user establish values (e.g. timings) for a plurality of parameters of interest (e.g. cell divisions) relating to the development of an embryo from a series of images of the embryo are described. For each parameter of interest an image is selected for display to a user seeking to establish a value for the parameter of interest. For example the selected image may be an image predicted to be an image reflecting the value for the parameter of interest. For example the selected image may be based on a calculated timing for a particular developmental event. The timing may be calculated from a numerical analysis of the images or maybe predetermined. If the user is unable to determine a value for the parameter of interest from the selected image the user may scroll through neighbouring images until the user can determine a value for the parameter of interest. A value for the proud of interest may then be established in response to user input for example a user providing an indication that a timing associated with a currently displayed image from the series of images should be taken to be the value of the parameter of interest. The different parameters of interest may be established in an iterative manner in which an initial image for display to a user is selected for each parameter of interest based on the parameter of interest.

No. of Pages : 28 No. of Claims : 27

(12) PATENT APPLICATION PUBLICATION
(19) INDIA
(22) Date of filing of Application :29/08/2016

(21) Application No.201617029362 A
(43) Publication Date : 20/01/2017

(54) Title of the invention : ARYL LACTAM KINASE INHIBITORS

(51) International classification	:A61K31/4375,C07D471/04,A61P25/02
(31) Priority Document No	:PCT/US2014/013539
(32) Priority Date	:29/01/2014
(33) Name of priority country	:PCT
(86) International Application No Filing Date	:PCT/US2014/013539 :29/01/2014
(87) International Publication No	:WO 2015/116060
(61) Patent of Addition to Application Number Filing Date	:NA :NA
(62) Divisional to Application Number Filing Date	:NA :NA

(71)**Name of Applicant :**
1)BRISTOL MYERS SQUIBB COMPANY
Address of Applicant :Route 206 and Province Line Road Princeton New Jersey 08543 U.S.A.
(72)**Name of Inventor :**
1)VRUDHULA Vivekananda M.
2)PAN Senliang
3)RAJAMANI Ramkumar
4)NARA Susheel Jethanand
5)KARATHOLUVHU Maheswaran Sivasamban
6)MAISHAL Tarun Kumar
7)DITTA Jonathan L.
8)DZIERBA Carolyn Diane
9)BRONSON Joanne J.
10)MACOR John E.

(57) Abstract :
The present disclosure is generally directed to compounds which can inhibit AAK1 (adaptor associated kinase 1) compositions comprising such compounds and methods for inhibiting AAK1.

No. of Pages : 321 No. of Claims : 3

(12) PATENT APPLICATION PUBLICATION
(19) INDIA
(22) Date of filing of Application :29/08/2016
(21) Application No.201617029363 A
(43) Publication Date : 20/01/2017

(54) Title of the invention : INFORMATION PROCESSING DEVICE AND MONITORING METHOD

(51) International classification :G06F11/32
(31) Priority Document No :2014058496
(32) Priority Date :20/03/2014
(33) Name of priority country :Japan
(86) International Application No :PCT/JP2015/001499
Filing Date :18/03/2015
(87) International Publication No :WO 2015/141220
(61) Patent of Addition to Application Number :NA
Filing Date :NA
(62) Divisional to Application Number :NA
Filing Date :NA

(71)**Name of Applicant :**
1)NEC CORPORATION
Address of Applicant :7 1Shiba 5 chome Minato ku Tokyo 1088001 Japan
(72)**Name of Inventor :**
1)NOMURA Takashi
2)KIDA Koji
3)KAMIMURA Junpei
4)SAKAE Yoshiaki
5)KATSUDA Etsuko
6)ISOYAMA Kazuhiko
7)YAMASAKI Kentaro
8)KOBAYASHI Yuji

(57) Abstract :
The present invention provides an information processing device that outputs information including the data transmission relationship between elements constituting an information processing system said information indicating the state of the information processing system. The information processing device comprises a graphing means for generating a relationship graph on the basis of an event log indicating the behavior of each of a plurality of processes operating in the system said relationship graph having said processes as the vertices thereof and having the data transmission relationship between said vertices as the sides thereof; and a graph output means for outputting the generated relationship graph.

No. of Pages : 53 No. of Claims : 30

(12) PATENT APPLICATION PUBLICATION
(19) INDIA
(22) Date of filing of Application :29/08/2016
(21) Application No.201617029364 A
(43) Publication Date : 20/01/2017

(54) Title of the invention : PROCESS MANAGEMENT SYSTEM PROCESS MANAGEMENT DEVICE AND PROCESS MANAGEMENT METHOD

(51) International classification	:G05B19/418,G05B19/05,G06Q50/04
(31) Priority Document No	:2014058782
(32) Priority Date	:20/03/2014
(33) Name of priority country	:Japan
(86) International Application No	:PCT/JP2015/052255
Filing Date	:28/01/2015
(87) International Publication No	:WO 2015/141283
(61) Patent of Addition to Application Number	:NA
Filing Date	:NA
(62) Divisional to Application Number	:NA
Filing Date	:NA

(71)**Name of Applicant :**
1)HITACHI LTD.
Address of Applicant :6 6 Marunouchi 1 chome Chiyoda ku Tokyo 1008280 Japan
(72)**Name of Inventor :**
1)SUETSUGU Yuki

(57) Abstract :
Proposed is a communication system wherein processes are easily managed. This process management system which is equipped with a controller for controlling devices installed in a factory and a process management device connected so as to be capable of performing OPC communication with the controller is characterized in that the controller is equipped with a register storing device information from the devices and the process management device is equipped with a storage unit storing as definition information tags associated with storage regions in the register and a monitoring communication unit that monitors the device information by referencing the definition information and periodically accessing the storage regions which are in the register and associated with the tags.

No. of Pages : 31 No. of Claims : 7

(12) PATENT APPLICATION PUBLICATION
(19) INDIA
(22) Date of filing of Application :25/08/2016
(21) Application No.201617028997 A
(43) Publication Date : 20/01/2017

(54) Title of the invention : SHORT RANGE COMMUNICATIONS CONTROL

(51) International classification :G06F21/10,H04L29/08,H04L29/06
(31) Priority Document No :1401338.7
(32) Priority Date :27/01/2014
(33) Name of priority country :U.K.
(86) International Application No :PCT/GB2015/050169
Filing Date :26/01/2015
(87) International Publication No :WO 2015/110837
(61) Patent of Addition to Application Number :NA
Filing Date :NA
(62) Divisional to Application Number :NA
Filing Date :NA

(71)**Name of Applicant :**
1)OMARCO NETWORK SOLUTIONS LIMITED
Address of Applicant :First Floor Millennium House Victoria Road Douglas Isle of Man British Isles IM2 4RW U.K.
(72)**Name of Inventor :**
1)OMAR Ralph Mahmoud

(57) Abstract :
A method of downloading a selected application program (app) to a mobile device via a wireless communications channel is described. The app comprises a plurality of components including an app mask and at least one content component and the app mask comprises instructions for controlling the download of the at least one content component. The method comprises :establishing a wireless communications channel between the mobile device and a terminal;receiving the app mask at the mobile device via the wireless channel;using the app mask to control downloading of the at least one content component until the entire app has been downloaded; and making the app available on the mobile device for use.

No. of Pages : 24 No. of Claims : 32

(12) PATENT APPLICATION PUBLICATION
(21) Application No.201617028998 A
(19) INDIA
(22) Date of filing of Application :25/08/2016
(43) Publication Date : 20/01/2017

(54) Title of the invention : IMPROVEMENTS RELATING TO ACTIVATING TRANSACTION CARDS

(51) International classification :G06K5/00
(31) Priority Document No :1401600.0
(32) Priority Date :30/01/2014
(33) Name of priority country :U.K.
(86) International Application No :PCT/IB2015/000309
Filing Date :30/01/2015
(87) International Publication No :WO 2015/114460
(61) Patent of Addition to Application Number :NA
Filing Date :NA
(62) Divisional to Application Number :NA
Filing Date :NA

(71)**Name of Applicant :**
1)OMARCO NETWORK SOLUTIONS LIMITED
Address of Applicant :First Floor Millennium House Victoria Road Douglas Isle of Man British Isles IM2 4RW U.K.
(72)**Name of Inventor :**
1)OMAR Ralph Mahmoud

(57) Abstract :
A method of activating a transaction card at an authentication server the card comprising a unique identifier a first user interaction zone comprising one or more user interaction symbols and a second user interaction zone comprising one or more user interaction regions the method comprising: receiving a vendor request to provide an authentication code the request comprising a unique identifier of a transaction card; generating an authentication code; storing the unique identifier and authentication code in a data store; sending the authentication code to the vendor; receiving an activation request the request comprising the unique identifier of the transaction card symbol data associated with one of the one or more user interaction symbols and the authentication code; checking that the unique identifier and vendor authentication code contained in the activation request correspond to a data record in the data store; and in the event that the identifier and code correspond activating the transaction card wherein activation comprises sending an activation message indicating which of the one or more user interaction regions is active.

No. of Pages : 25 No. of Claims : 36

(12) PATENT APPLICATION PUBLICATION
(19) INDIA
(22) Date of filing of Application :25/08/2016

(21) Application No.201617028999 A
(43) Publication Date : 20/01/2017

(54) Title of the invention : MANAGEMENT OF GROUP SOURCED CONTACTS DIRECTORIES SYSTEMS AND METHODS

(51) International classification	:G06Q50/30,G06Q50/10,H04W88/02
(31) Priority Document No	:61/950163
(32) Priority Date	:09/03/2014
(33) Name of priority country	:U.S.A.
(86) International Application No	:PCT/US2015/019443
Filing Date	:09/03/2015
(87) International Publication No	:WO 2015/138320
(61) Patent of Addition to Application Number	:NA
Filing Date	:NA
(62) Divisional to Application Number	:NA
Filing Date	:NA

(71)**Name of Applicant :**
1)GUPTA Vishal
Address of Applicant :21 Sunder Nagar Delhi 110003 Delhi India
(72)**Name of Inventor :**
1)GUPTA Vishal

(57) Abstract :
Systems and methods for group sourced contacts directories are presented. A first member of a shared contacts directory can add contact information of a second user to the directory. Upon addition of the contact information of the second user the contacts directory discovery system automatically sends a notification to the second user and provides the second user editing rights to the contact information of the directory. Changes made in the directory is automatically synchronized to the across the user devices associated with the members of the directory.

No. of Pages : 25 No. of Claims : 72

(12) PATENT APPLICATION PUBLICATION
(21) Application No.201617029011 A
(19) INDIA
(22) Date of filing of Application :25/08/2016
(43) Publication Date : 20/01/2017

(54) Title of the invention : HEXAGONAL PLATE LIKE ZINC OXIDE PARTICLES PRODUCTION METHOD THEREFOR COSMETIC FILLER RESIN COMPOSITION INFRARED REFLECTIVE MATERIAL AND COATING COMPOSITION

(51) International classification :C01G9/02,A61K8/27,A61Q17/04
(31) Priority Document No :2014022360
(32) Priority Date :07/02/2014
(33) Name of priority country :Japan
(86) International Application No :PCT/JP2014/083227
Filing Date :16/12/2014
(87) International Publication No :WO 2015/118777
(61) Patent of Addition to Application Number :NA
Filing Date :NA
(62) Divisional to Application Number :NA
Filing Date :NA

(71)**Name of Applicant :**
1)SAKAI CHEMICAL INDUSTRY CO. LTD.
Address of Applicant :5 2 Ebisujima cho Sakai ku Sakai shi Osaka 5908502 Japan
(72)**Name of Inventor :**
1)YOSHIDA Ryohei
2)SUEDA Satoru
3)HASHIMOTO Mitsuo
4)WADA Mizuho

(57) Abstract :
To provide hexagonal plate like zinc oxide particles suitable for use in a cosmetic a filler a resin composition an infrared reflective material and a coating composition and also to provide a production method therefor. [Solution] Hexagonal plate like zinc oxide particles characterized by having a primary particle size of 1.1 μm or more and a particle size distribution such that D90/D10 is 3.0 or less.

No. of Pages : 41 No. of Claims : 9

(12) PATENT APPLICATION PUBLICATION
(21) Application No.201617029012 A
(19) INDIA
(22) Date of filing of Application :25/08/2016
(43) Publication Date : 20/01/2017

(54) Title of the invention : SAMPLING POSITION DISPLAY DEVICE AND SAMPLING METHOD

(51) International classification :G01N1/04,G01N1/28
(31) Priority Document No :2014071988
(32) Priority Date :31/03/2014
(33) Name of priority country :Japan
(86) International Application No :PCT/JP2014/065867
Filing Date :16/06/2014
(87) International Publication No :WO 2015/151301
(61) Patent of Addition to Application Number :NA
Filing Date :NA
(62) Divisional to Application Number :NA
Filing Date :NA

(71)**Name of Applicant :**
1)MITSUBISHI MATERIALS CORPORATION
Address of Applicant :3 2 Otemachi 1 chome Chiyoda ku Tokyo 1008117 Japan
(72)**Name of Inventor :**
1)NITTA Akira
2)ONISHI Michiaki
3)TOMIOKA Kenichi
4)TSUTSUI Tomohiro
5)TAKAGI Makoto

(57) Abstract :
In a sampling method according to the present invention the coordinates (position information) of a sampling position of a sampling specimen (G) are generated randomly by a PC or other control unit (12) for a sampling position display device (10) and on the basis of the position information laser light is used to display the sampling position on the sampling specimen (G) which constitutes a portion of material to be recycled. As a result in increment sampling for determining the average quality for example the average valuable metal content of a sampling specimen (G) it is possible to reliably eliminate arbitrariness resulting from the selection of a sampling position manually by an operator.

No. of Pages : 26 No. of Claims : 6

(12) PATENT APPLICATION PUBLICATION
(19) INDIA
(22) Date of filing of Application :29/08/2016
(21) Application No.201617029377 A
(43) Publication Date : 20/01/2017

(54) Title of the invention : TWO STEEL SCREW WITH AN EXTRUSION CONNECTION AND METHOD FOR PRODUCING SAID SCREW

(51) International classification :F16B25/00,B21K25/00,B21K1/44
(31) Priority Document No :10 2014 204 598.3
(32) Priority Date :12/03/2014
(33) Name of priority country :Germany
(86) International Application No :PCT/EP2015/052762
Filing Date :10/02/2015
(87) International Publication No :WO 2015/135710
(61) Patent of Addition to Application Number :NA
Filing Date :NA
(62) Divisional to Application Number :NA
Filing Date :NA

(71)**Name of Applicant :**
1)EJOT GMBH & CO. KG
Address of Applicant :Astenbergstrae 21 57319 Bad Berleburg Germany
(72)**Name of Inventor :**
1)GROTMANN Dieter
2)KETTNER Tobias

(57) Abstract :
The invention relates to a two steel screw comprising a top part and a cutting part the top part consisting of a corrosion resistant material and having a screw head and a shank portion and the cutting part consisting of a hardenable material the top part being permanently connected to the cutting part in the region of the shank portion by way of extrusion. Furthermore the invention relates to a method for the production of such a screw.

No. of Pages : 9 No. of Claims : 15

(12) PATENT APPLICATION PUBLICATION
(19) INDIA
(22) Date of filing of Application :29/08/2016
(21) Application No.201617029389 A
(43) Publication Date : 20/01/2017

(54) Title of the invention : ETCH RESISTANT INKJET INKS FOR MANUFACTURING CONDUCTIVE PATTERNS

(51) International classification :C09D11/00,C09D11/10,G03F7/00
(31) Priority Document No :14157441.8
(32) Priority Date :03/03/2014
(33) Name of priority country :EPO
(86) International Application No :PCT/EP2015/051664
Filing Date :28/01/2015
(87) International Publication No :WO 2015/132020
(61) Patent of Addition to Application Number :NA
Filing Date :NA
(62) Divisional to Application Number :NA
Filing Date :NA

(71)**Name of Applicant :**
1)AGFA GEVAERT
Address of Applicant :IP Department 3622 Septestraat 27 B 2640 Mortsel Belgium
(72)**Name of Inventor :**
1)TORFS Rita
2)LOCCUFIER Johan

(57) Abstract :
A method of manufacturing conductive patterns including the steps of: a) UV curable inkjet printing a cured inkjet ink pattern on a metal sheet bonded to a non conductive substrate; b) etching the metal sheet not covered by the cured ink pattern to expose the non conductive substrate; and c) applying an alkaline solution to dissolve the cured inkjet ink pattern within 5 minutes.

No. of Pages : 42 No. of Claims : 15

(12) PATENT APPLICATION PUBLICATION
(19) INDIA
(22) Date of filing of Application :29/08/2016
(21) Application No.201617029393 A
(43) Publication Date : 20/01/2017

(54) Title of the invention : A METHOD FOR MAKING A LITHOGRAPHIC PRINTING PLATE PRECURSOR

(51) International classification :G03F7/11,G03F7/095,G03F7/09
(31) Priority Document No :14157469.9
(32) Priority Date :03/03/2014
(33) Name of priority country :EPO
(86) International Application No :PCT/EP2015/053839
Filing Date :24/02/2015
(87) International Publication No:WO 2015/132097
(61) Patent of Addition to Application Number :NA
Filing Date :NA
(62) Divisional to Application Number :NA
Filing Date :NA

(71)**Name of Applicant :**
1)AGFA GRAPHICS NV
Address of Applicant :IP Department 3622 Septestraat 27 B 2640 Mortsel Belgium
(72)**Name of Inventor :**
1)STEENACKERS Marin
2)LOCCUFIER Johan
3)VERBRUGGHE Sam

(57) Abstract :
A method for making a lithographic printing plate is disclosed comprising the steps of: a) providing a lithographic printing plate precursor comprising a support having a hydrophilic surface or which is provided with a hydrophilic layer and a coating provided thereon said coating including a photopolymerisable layer including a photopolymerisable composition b) image wise exposing the precursor c) optionally heating the precursor d) developing the precursor by treating the precursor with a gum solution whereby the precursor is developed and gummed in one single step characterized in that the photopolymerisable composition comprises a monomer represented by Formula (I) and/or Formula (II) wherein denotes the linking positions to the rest of the compound.

No. of Pages : 43 No. of Claims : 10

(12) PATENT APPLICATION PUBLICATION
(21) Application No.201617029394 A
(19) INDIA
(22) Date of filing of Application :29/08/2016
(43) Publication Date : 20/01/2017

(54) Title of the invention : NON CONCENTRIC PROTRUDING SHAFT FIXED BEARING RECIPROCATING IMPACT PART FOR IMPLEMENTING A RECIPROCATING IMPACT NON CONCENTRIC PROTRUDING SHAFT FIXED BEARING METHOD

(51) International classification	:E21C27/00,E21C25/02,E21C31/02
(31) Priority Document No	:201410042607.6
(32) Priority Date	:29/01/2014
(33) Name of priority country	:China
(86) International Application No	:PCT/CN2015/071782
Filing Date	:29/01/2015
(87) International Publication No	:WO 2015/113504
(61) Patent of Addition to Application Number	:NA
Filing Date	:NA
(62) Divisional to Application Number	:NA
Filing Date	:NA

(71)**Name of Applicant :**
1)LIU Suhua
Address of Applicant :Yanzhou Haizhi Mechanical and Electrical Technology Co. LTD Xinyanzhen Industrial Park Yanzhou Jining Shandong 272100 China
(72)**Name of Inventor :**
1)LIU Suhua

(57) Abstract :
A reciprocating impact part non concentric protruding shaft fixed bearing method the method comprising: 1. arranging an eccentric shaft section (12) and a power shaft section (11) arranging eccentric shaft section (12) bearings (8) on the eccentric shaft section (12) and arranging power shaft section bearings (5) on the power shaft section (11); 2. arranging power shaft section bearing retaining rings (10) and eccentric shaft section bearing retaining rings (9) such that the power shaft section bearing retaining rings (10) and the eccentric shaft section bearing retaining rings (9) block the power shaft section bearing (5) and the eccentric shaft section bearing (8) respectively; 3. arranging connecting rods (2) and arranging the connecting rods (2) as separate snap fitted crankshaft connecting rods or as integrated sleeved crankshaft connecting rods and fitting the integrated sleeved crankshaft connecting rods onto the eccentric shaft section bearing (8); 4. arranging a case (1) arranging the power shaft section bearings (5) on the base (1) such that the power shaft section bearings (5) support the power shaft section (11) and the eccentric shaft section (12); 5. arranging a power source component (3) such that the power source component (3) drives the power shaft section (11) to rotate such that the power shaft section (11) drives the connecting rods in reciprocating impact. Also provided is a non concentric protruding shaft fixed bearing reciprocating impact part for implementing a reciprocating impact non concentric protruding shaft fixed bearing method; the method and reciprocating impact part for implementing the method increase equipment service life and reduce the maintenance workload.

No. of Pages : 22 No. of Claims : 15

(12) PATENT APPLICATION PUBLICATION
(21) Application No.201614018105 A
(19) INDIA
(22) Date of filing of Application :26/05/2016
(43) Publication Date : 20/01/2017

(54) Title of the invention : PROCESS FOR THE PRODUCTION OF MELAMINE WITH SEPARATION AND RECOVERY OF HIGH-PURITY CO2 AND NH3

(51) International classification :B01J8/00
(31) Priority Document No :102015000035627
(32) Priority Date :17/07/2015
(33) Name of priority country :Italy
(86) International Application No :NA
Filing Date :NA
(87) International Publication No : NA
(61) Patent of Addition to Application Number :NA
Filing Date :NA
(62) Divisional to Application Number :NA
Filing Date :NA

(71)**Name of Applicant :**
1)EUROTECNICA MELAMINE, LUXEMBURG, ZWEIGNIEDERLASSUNG IN ITTIGEN
Address of Applicant :c/o Peter Muntwyler Fursprecher und Notar, Talgut-Zentrum 19, 3063 Ittigen, Switzerland Switzerland
(72)**Name of Inventor :**
1)BOGOTTO MATTIA
2)MERELLI GIUSEPPE
3)SANTUCCI ROBERTO

(57) Abstract :
The present invention relates to a process for the production of melamine from 5 urea, with the separation and recovery of high-purity CO2 and NH3, comprising the following operating steps: a) synthesizing melamine in a Main Reactor by pyrolysis of a stream of molten urea (301), in the presence of NH3 (319), obtaining a stream of molten raw melamine (303) and a stream of off-gas containing NH3 and CO2 (302); b) optionally, treating the stream of molten raw melamine (303) leaving the 10 Main Reactor in a Post Reactor in the presence of gaseous ammonia (304), for the completion of the pyrolysis reaction of urea, obtaining a stream of molten raw melamine (306), substantially free of unconverted urea and COz and a stream of off-gas (305) mainly consisting of NH3 and containing all of the COz formed in the reaction; c) subjecting the stream of off-gas (302) coming from step a) and, if 15 present, the stream of off-gas (305) coming from step b), to distillation in the presence of an aqueous extraction solvent (329,3 18), obtaining a gaseous stream of high-purity C02 (3 14) and an aqueous anlmonia stream (3 15) containing COz; d) subjecting the aqueous ammonia stream coming from step c) (315) to stripping to remove the C02 still present; e) cooling and solubilizing the stream of molten raw 20 melamine (303) obtained from step a) or (306) from step b) when present, by contact with the aqueous ammonia stream (315) coming from step c), obtaining an aqueous ammonia solution (330) containing dissolved melamine, impurities of polycondensates and OATS; f) purifying the aqueous ammonia solution of melamine (330) coming from step e) by remaining in the presence of NH3, 25 transforming the polycondensates into melamine; g) crystallizing the melamine present in the purified aqueous solution (307) coming from step f) and separating the melamine crystals from said solution, obtaining a wet cake (309) of melamine and a stream of crystallization mother liquor (310) containing only OATs, dissolved melamine residues and NH3; h) distilling the mother liquor leaving step g), obtaining a stream of high-purity NH3 (317) and an aqueous ammonia-free stream (322), containing OATs and melamine residues in solution, subsequently 5 recovered andlor eliminated in specific sections downstream of the process, for example in a Decomposer/Stripper section; i) drying the wet melamine cake (309) coming from step g) with hot air, obtaining dried melamine crystals with a high degree of purity and an exhausted stream of air containing ammonia; said process requiring that step c) for the extractive distillation of the stream of off-gas (302) 10 coming form step a) and, if present, the stream of off-gas (305) coming from step b), be carried out in the presence of an aqueous extraction solvent, at a pressure ranging from 55 to 250 bar, preferably fsom 70 to 170 bar.

No. of Pages : 37 No. of Claims : 17

(12) PATENT APPLICATION PUBLICATION
(21) Application No.201617031430 A
(19) INDIA
(22) Date of filing of Application :15/09/2016
(43) Publication Date : 20/01/2017

(54) Title of the invention : METHODS FOR SEALING DETECTION AND MARKING LEAKS IN STRUCTURAL ENCLOSURES

(51) International classification :B05D7/22
(31) Priority Document No :61/971101
(32) Priority Date :27/03/2014
(33) Name of priority country :U.S.A.
(86) International Application No :PCT/US2015/023119
Filing Date :27/03/2015
(87) International Publication No :WO 2015/148990
(61) Patent of Addition to Application Number :NA
Filing Date :NA
(62) Divisional to Application Number :NA
Filing Date :NA

(71)**Name of Applicant :**
1)THE REGENTS OF THE UNIVERSITY OF CALIFORNIA
Address of Applicant :1111 Franklin Street 12th Floor Oakland California 94607 5200 U.S.A.
(72)**Name of Inventor :**
1)MODERA Mark
2)HARRINGTON Curtis
3)DICHTER Nelson

(57) Abstract :
A system and method for detecting marking and/or sealing building envelope leaks in buildings or any enclosed structure. Fogs of aerosolized sealant particles that have a surface tackiness that diminishes over time are introduced into the interior of prepared rooms. The surface properties of the aerosol particles can be controlled with the selection of sealant composition including the presence and concentration of solvents the range of produced particle sizes and the relative humidity and temperature within the enclosure. A pressure differential is created and the micron scale particles adhere to the leak edges and to other particles as they are brought to the leaks and then leave the gas streamlines. Control of particle size drying rate and particle residence time in the building interior allows control over the treatment area so that leaks are sealed without leaving a tacky residue.

No. of Pages : 27 No. of Claims : 25

(12) PATENT APPLICATION PUBLICATION
(19) INDIA
(22) Date of filing of Application :21/09/2016
(21) Application No.201617032252 A
(43) Publication Date : 20/01/2017

(54) Title of the invention : MODULAR POWERED SURGICAL INSTRUMENT WITH DETACHABLE SHAFT ASSEMBLIES

(51) International classification :A61B17/072
(31) Priority Document No :14/226075
(32) Priority Date :26/03/2014
(33) Name of priority country :U.S.A.
(86) International Application No :PCT/US2015/019822
Filing Date :11/03/2015
(87) International Publication No :WO 2015/148117
(61) Patent of Addition to Application Number :NA
Filing Date :NA
(62) Divisional to Application Number :NA
Filing Date :NA

(71)**Name of Applicant :**
1)ETHICON ENDO SURGERY INC.
Address of Applicant :4545 Creek Road Cincinnati Ohio 45242 U.S.A.
(72)**Name of Inventor :**
1)LEIMBACK Richard L.
2)OVERMYER Mark D.
3)ADAMS Shane R.

(57) Abstract :
An interchangeable shaft assembly for a surgical instrument that includes first and second drive systems. The interchangeable shaft assembly is configured for removable attachment to a housing of the surgical instrument. Various embodiments include a latch system that enables the interchangeable shaft assembly to be detached from the housing when the first drive system is unactuated but prevents the interchangeable shaft assembly from being detached from the housing when the first drive system is in an actuated position.

No. of Pages : 91 No. of Claims : 20

(12) PATENT APPLICATION PUBLICATION
(19) INDIA
(22) Date of filing of Application :21/09/2016
(21) Application No.201617032253 A
(43) Publication Date : 20/01/2017

(54) Title of the invention : STERILIZATION VERIFICATION CIRCUIT

(51) International classification :A61B17/068
(31) Priority Document No :14/226099
(32) Priority Date :26/03/2014
(33) Name of priority country :U.S.A.
(86) International Application No :PCT/US2015/019819
Filing Date :11/03/2015
(87) International Publication No :WO 2015/148114
(61) Patent of Addition to Application Number :NA
Filing Date :NA
(62) Divisional to Application Number :NA
Filing Date :NA

(71)**Name of Applicant :**
1)ETHICON ENDO SURGERY INC.
Address of Applicant :4545 Creek Road Cincinnati Ohio 45242 U.S.A.
(72)**Name of Inventor :**
1)LEIMBACK Richard L.
2)ADAMS Shane R.
3)OVERMYER Mark D.
4)SWENSGARD Brett E.
5)LYTLE Thomas W. IV
6)SHELTON Frederick E. IV
7)HOUSER Kevin L.

(57) Abstract :
The present disclosure provides a surgical instrument control circuit. The control circuit includes a primary processor a safety processor in signal communication with the primary processor and a segmented circuit comprising a plurality of circuit segments in signal communication with the primary processor. The plurality of circuit segments comprising a storage verification segment configured to indicate when a surgical instrument has been properly stored and sterilized.

No. of Pages : 53 No. of Claims : 20

(12) PATENT APPLICATION PUBLICATION
(19) INDIA
(22) Date of filing of Application :21/09/2016
(21) Application No.201617032254 A
(43) Publication Date : 20/01/2017

(54) Title of the invention : SOLENOID VALVE

(51) International classification :F16K39/02,F16K31/06
(31) Priority Document No :14171133.3
(32) Priority Date :04/06/2014
(33) Name of priority country :EPO
(86) International Application No :PCT/EP2015/061832
Filing Date :28/05/2015
(87) International Publication No :WO 2015/185437
(61) Patent of Addition to Application Number :NA
Filing Date :NA
(62) Divisional to Application Number :NA
Filing Date :NA

(71)**Name of Applicant :**
1)DANFOSS A/S
Address of Applicant :Nordborgvej 81 6430 Nordborg Denmark
(72)**Name of Inventor :**
1)BIRKELUND Michael

(57) Abstract :
A solenoid valve (1) is described comprising a first port (2) a second port (3) a valve element (4) and a valve seat (5) arranged between said first port (2) and said second port (3) a coil (12) and a yoke arrangement (14 16) said coil (12) being magnetically linked to said yoke arrangement (14 16) said yoke arrangement (14 16) having a movable armature (16). In such a solenoid valve the generation of noise should be kept low. To this end said valve element (4) is driven by a pressure difference between a first pressure on a first side (6) of said valve element (4) and a second pressure on a second side (7) of said valve element (4) at least one of said first pressure and said second pressure being controlled by means of said armature (16) wherein said armature (16) comprises a first front face (18) at a first end and a second front face (19) at a second end opposite said first end said first front face (18) and said second front face (19) being connected by a first flow path (21) said first flow path having first throttling means for keeping low a flow of a fluid flowing through said first flow path (21).

No. of Pages : 12 No. of Claims : 14

(12) PATENT APPLICATION PUBLICATION
(19) INDIA
(22) Date of filing of Application :21/09/2016
(21) Application No.201617032281 A
(43) Publication Date : 20/01/2017

(54) Title of the invention : MOUNTING MODULE

(51) International classification :F01L1/053,F01L1/18
(31) Priority Document No :10 2014 210 477.7
(32) Priority Date :03/06/2014
(33) Name of priority country :Germany
(86) International Application No :PCT/DE2015/200234
Filing Date :31/03/2015
(87) International Publication No :WO 2015/185044
(61) Patent of Addition to Application Number :NA
Filing Date :NA
(62) Divisional to Application Number :NA
Filing Date :NA

(71)**Name of Applicant :**
1)SCHAEFFLER TECHNOLOGIES AG & CO. KG
Address of Applicant :Industriestrae 1 3 91074 Herzogenaurach Germany
(72)**Name of Inventor :**
1)GR–TSCH Andreas
2)KRAWIETZ Christopher
3)MAYER Johanna

(57) Abstract :
A mounting module (1) for an OHC valve train of an internal combustion engine is proposed having two upright and separate supporting walls (2) which can be connected at the upper ends (3) thereof at least indirectly to a cylinder head cover and at the lower ends (4) thereof at least indirectly to a cylinder head and in each case have at least one main and auxiliary bore (5 6) for mounting a cam and valve actuating lever shaft (7 8 9) in between wherein a limb (10) which is bent away orthogonally projects from the lower end (4) of each supporting wall (2) which limb (10) is fastened on a separate base plate (11) which serves to directly connect the mounting module (1) to the cylinder head and wherein the base plate (11) and the supporting walls (2) with the limbs (10) thereof are produced from steel sheet using stamping/bending technology.

No. of Pages : 5 No. of Claims : 10

(12) PATENT APPLICATION PUBLICATION
(21) Application No.201617032081 A
(19) INDIA
(22) Date of filing of Application :20/09/2016
(43) Publication Date : 20/01/2017

(54) Title of the invention : METHOD TO ENABLE DEEP PACKET INSPECTION (DPI) IN OPENFLOW BASED SOFTWARE DEFINED NETWORK (SDN)

(51) International classification :H04L1/00
(31) Priority Document No :14/276984
(32) Priority Date :13/05/2014
(33) Name of priority country :U.S.A.
(86) International Application No :PCT/US2014/045312
Filing Date :02/07/2014
(87) International Publication No :WO 2015/175007
(61) Patent of Addition to Application Number :NA
Filing Date :NA
(62) Divisional to Application Number :NA
Filing Date :NA

(71)**Name of Applicant :**
1)DELL SOFTWARE INC.
Address of Applicant :One Dell Way Round Rock TX 78682 U.S.A.
(72)**Name of Inventor :**
1)LING Hui
2)CHEN Zhong

(57) Abstract :
The present invention relates to a method and system for performing deep packet inspection of messages transmitted through a network switch in a Software Defined Network (SDN). Embodiments of the invention include a network switch a controller and a firewall in a software defined networking environment. In the present invention the network switch is a simple network switch that is physically separate from the controller and the firewall. The invention may include a plurality of physically distinct network switches communicating with one or more controllers and firewalls. In certain instances communications between the network switch the controller and the firewall are performed using the Open Flow standard communication protocol.

No. of Pages : 14 No. of Claims : 20

(12) PATENT APPLICATION PUBLICATION
(21) Application No.201617032082 A
(19) INDIA
(22) Date of filing of Application :20/09/2016
(43) Publication Date : 20/01/2017

(54) Title of the invention : GAS POCKET DISSOLUTION DEVICE FOR PIPE TANK OR INSTRUMENT

(51) International classification :F15D1/02,F16L55/07
(31) Priority Document No :2014064672
(32) Priority Date :10/03/2014
(33) Name of priority country :Japan
(86) International Application No :PCT/JP2015/057394
Filing Date :06/03/2015
(87) International Publication No :WO 2015/137474
(61) Patent of Addition to Application Number :NA
Filing Date :NA
(62) Divisional to Application Number :NA
Filing Date :NA

(71)**Name of Applicant :**
1)IBA Taiki
Address of Applicant :701 Tohouhaitu 1 15 Higashi kanda 3 chome Chiyoda ku Tokyo 1010031 Japan
(72)**Name of Inventor :**
1)IBA Taiki

(57) Abstract :
A device that does not draw in outside air when a gas pocket in an instrument and a pipe or a tank leading to the pipe is to be removed even when the instrument and the pipe or the tank leading to the pipe are pressureless and that does not require countermeasures against liquid drainage out of the system during malfunctions. [Solution] In the present invention a suction pipe inlet is provided to the uppermost part of a gas pocket in a means for conveying a gas together with a fluid within a system and a gas pocket is prevented from forming by a means for connecting a communicated suction pipe to an outlet side pipe and arranging or combining a negative pressure generating head valve body narrowing section water turbine or torsional rotation generating part for generating gas conveying force between the tank and instrument and the outlet side pipe to obtain conveying pressure.

No. of Pages : 12 No. of Claims : 8

(12) PATENT APPLICATION PUBLICATION
(19) INDIA
(22) Date of filing of Application :20/09/2016
(21) Application No.201617032100 A
(43) Publication Date : 20/01/2017

(54) Title of the invention : MOBILITY ROBUSTNESS OPTIMIZATION IN A CELLULAR NETWORK

(51) International classification :H04W24/02,H04W36/00,H04W76/02
(31) Priority Document No :61/968570
(32) Priority Date :21/03/2014
(33) Name of priority country :U.S.A.
(86) International Application No :PCT/EP2015/050271
Filing Date :08/01/2015
(87) International Publication No :WO 2015/139850
(61) Patent of Addition to Application Number :NA
Filing Date :NA
(62) Divisional to Application Number :NA
Filing Date :NA

(71)**Name of Applicant :**
1)TELEFONAKTIEBOLAGET LM ERICSSON (PUBL)
Address of Applicant :S 164 83 Stockholm Sweden
(72)**Name of Inventor :**
1)DUDDA Torsten
2)CENTONZA Angelo
3)YAVUZ Emre
4)FOLKE Mats
5)WAGER Stefan

(57) Abstract :
The present invention relates to a method in a node eNB of a cellular network for supporting mobility to a method in a user equipment for supporting mobility to in the cellular network and to corresponding devices namely user equipment and node. According to one aspect a method for supporting mobility in a cellular network is provided. The method runs in a node eNB for the cellular network. According to the method the node receives from a user equipment an information of a radio link failure of a radio link between the user equipment and the cellular network and the node receives information related to a mobility e.g. expiry of T312 timer of the user equipment. Based on the received information the node adjusts at least one mobility parameter to increase robustness of mobility. The present invention improves robustness of mobility functions in a cellular network.

No. of Pages : 44 No. of Claims : 30

(12) PATENT APPLICATION PUBLICATION
(21) Application No.201617032112 A
(19) INDIA
(22) Date of filing of Application :20/09/2016
(43) Publication Date : 20/01/2017

(54) Title of the invention : ELECTRONIC EXPANSION VALVE AND METHODS FOR CALIBRATING AN ELECTRONIC EXPANSION VALVE

(51) International classification :F25B41/06,F16K31/06
(31) Priority Document No :14171191.1
(32) Priority Date :04/06/2014
(33) Name of priority country :EPO
(86) International Application No :PCT/EP2015/061059
Filing Date :20/05/2015
(87) International Publication No :WO 2015/185356
(61) Patent of Addition to Application Number :NA
Filing Date :NA
(62) Divisional to Application Number :NA
Filing Date :NA

(71)**Name of Applicant :**
1)DANFOSS A/S
Address of Applicant :Nordborgvej 81 DK 6430 Nordborg Denmark
(72)**Name of Inventor :**
1)BIRKELUND Michael

(57) Abstract :
An electronic expansion valve (1) is provided comprising an inlet (9) an outlet (8) an armature (2) a stop member (3) a biasing member (4) and a solenoid coil (12). The biasing member (4) provides a biasing force on the armature (2) towards a closing direction while the solenoid coil (12) may be provided with a current to provide a magnetic force on the armature (2) towards an opening direction. It is intended to provide an electronic expansion valve that may be controlled more precisely and has a higher safety. To this end the pressure difference between the inlet pressure and the outlet pressure provides a differential pressure force on the armature (2) towards an opening direction to allow a fluid flow from the inlet (9) to the outlet (8) and furthermore the armature (2) is displaced away from the stop member (3) to allow a fluid flow from the inlet (9) to the outlet (8) if the sum of the magnetic force and the differential pressure force on the armature (2) exceeds the biasing force. The invention furthermore relates to a refrigeration system comprising such an electronic expansion valve as well as a method for calibrating such an electronic expansion valve.

No. of Pages : 17 No. of Claims : 15

(12) PATENT APPLICATION PUBLICATION
(19) INDIA
(22) Date of filing of Application :22/09/2016
(21) Application No.201617032436 A
(43) Publication Date : 20/01/2017

(54) Title of the invention : HETEROAROMATIC COMPOUNDS AND THEIR USE AS DOPAMINE D1 LIGANDS

(51) International classification :A61K31/4355,A61K31/4365,A61K31/437
(31) Priority Document No :61/984070
(32) Priority Date :25/04/2014
(33) Name of priority country :U.S.A.
(86) International Application No :PCT/IB2015/052594
Filing Date :09/04/2015
(87) International Publication No :WO 2015/162515
(61) Patent of Addition to Application Number :NA
Filing Date :NA
(62) Divisional to Application Number :NA
Filing Date :NA

(71)**Name of Applicant :**
1)PFIZER INC.
Address of Applicant :235 East 42nd Street New York New York 10017 U.S.A.
(72)**Name of Inventor :**
1)GRAY David Lawrence Firman
2)ZHANG Lei
3)DAVOREN Jennifer Elizabeth
4)DOUNAY Amy Beth
5)EFREMOV Ivan Viktorovich
6)MENTE Scot Richard
7)SUBRAMANYAM Chakrapani

(57) Abstract :
The present invention provides in part compounds of Formula I: and pharmaceutically acceptable salts thereof; processes for the preparation of; intermediates used in the preparation of; and compositions containing such compounds or salts and their uses for treating D1 mediated (or D1 associated) disorders including e.g. schizophrenia (e.g. its cognitive and negative symptoms) schizotypal personality disorder cognitive impairment (e.g. cognitive impairment associated with schizophrenia AD PD or pharmacotherapy therapy) ADHD Parkinson s disease anxiety and depression.

No. of Pages : 183 No. of Claims : 29

(12) PATENT APPLICATION PUBLICATION
(21) Application No.201617032437 A
(19) INDIA
(22) Date of filing of Application :22/09/2016
(43) Publication Date : 20/01/2017

(54) Title of the invention : COMPOSITIONS FOR GASTROINTESTINAL ADMINISTRATION OF RNA

(51) International classification :C12N15/87,C08F8/32,A61K48/00
(31) Priority Document No :14156847.7
(32) Priority Date :26/02/2014
(33) Name of priority country :EPO
(86) International Application No :PCT/EP2014/078922
Filing Date :19/12/2014
(87) International Publication No :WO 2015/128030
(61) Patent of Addition to Application Number :NA
Filing Date :NA
(62) Divisional to Application Number :NA
Filing Date :NA

(71)**Name of Applicant :**
1)ETHRIS GMBH
Address of Applicant :Semmelweisstrasse 3 82152 Planegg Germany
(72)**Name of Inventor :**
1)DOHMEN Christian
2)UTZINGER Maximilian
3)HASENPUSCH G¼nther
4)RUDOLPH Carsten
5)PLANK Christian

(57) Abstract :
The present invention relates to a pharmaceutical composition comprising a polyribonucleotide (RNA) and a cationic agent wherein said pharmaceutical composition is formulated as a solid dosage form for administration to the gastrointestinal (Gl) tract. The present invention furthermore relates to the use of such a pharmaceutical composition for systemic delivery of RNA and to a method for systemic delivery of RNA to a subject comprising the step of administering such a pharmaceutical composition to the Gl tract. Furthermore the present invention relates to a kit.

No. of Pages : 122 No. of Claims : 26

(12) PATENT APPLICATION PUBLICATION
(19) INDIA
(22) Date of filing of Application :22/09/2016
(21) Application No.201617032444 A
(43) Publication Date : 20/01/2017

(54) Title of the invention : SLIDING DOOR CLOSER SET

(51) International classification :E05F1/16,E05D15/06
(31) Priority Document No :2014038193
(32) Priority Date :28/02/2014
(33) Name of priority country :Japan
(86) International Application No :PCT/JP2015/054075
Filing Date :16/02/2015
(87) International Publication No :WO 2015/129494
(61) Patent of Addition to Application Number :NA
Filing Date :NA
(62) Divisional to Application Number :NA
Filing Date :NA

(71)**Name of Applicant :**
1)SUGATSUNE KOGYO CO. LTD.
Address of Applicant :1 8 11 Higashikanda Chiyoda ku Tokyo 1018633 Japan
(72)**Name of Inventor :**
1)SATO Genichi

(57) Abstract :
Provided is a sliding door closer set which makes it possible to adjust the position of a trigger provided inside a door pocket from outside the door pocket. A sliding door closer set equipped with a rail (4) a closer (6) capable of moving along the rail (4) and having a sliding door (1) hanging therefrom and a trigger (8) positioned inside the door pocket (2) wherein the sliding door (1) slides into the door pocket (2) as a result of engagement between the trigger (8) and the closer (6) which has moved to a prescribed position along the rail (4). Furthermore the trigger (8) positioned inside the door pocket (2) is integrally joined to a trigger integrating plate (10). In addition the trigger integrating plate (10) is attached to the rail (4) outside the door pocket (2).

No. of Pages : 18 No. of Claims : 3

(12) PATENT APPLICATION PUBLICATION
(19) INDIA
(22) Date of filing of Application :22/09/2016
(21) Application No.201617032446 A
(43) Publication Date : 20/01/2017

(54) Title of the invention : CONFIGURING LIGHTING ELECTRONICS USING DATABASE AND MOBILE DEVICE

(51) International classification :H05B37/02
(31) Priority Document No :61/972123
(32) Priority Date :28/03/2014
(33) Name of priority country :U.S.A.
(86) International Application No :PCT/US2015/023005
Filing Date :27/03/2015
(87) International Publication No :WO 2015/148929
(61) Patent of Addition to Application Number :NA
Filing Date :NA
(62) Divisional to Application Number :NA
Filing Date :NA

(71)**Name of Applicant :**
1)ROBERT BOSCH GMBH
Address of Applicant :Postfach 30 02 20 70442 Stuttgart Germany
(72)**Name of Inventor :**
1)MEITL Ryan Thomas
2)MARECKI Allen

(57) Abstract :
Methods and systems are described for replacing a lighting device in a wireless lighting device network. A first lighting device is identified using a mobile device such as for example a smart phone. Configuration data for the first lighting device is downloaded to the mobile device from a configuration database. The first lighting device is physically replaced with a second replacement lighting device and the second lighting device is identified using the mobile device. The downloaded configuration data corresponding to the first lighting device is then uploaded from the mobile device to the second lighting device and is subsequently used by the second lighting device to control the operation of the second lighting device. The configuration database is then updated based on the identification information for the second lighting device and the configuration data uploaded to the second lighting device from the mobile device.

No. of Pages : 9 No. of Claims : 14

(12) PATENT APPLICATION PUBLICATION
(19) INDIA
(22) Date of filing of Application :21/09/2016

(21) Application No.201617032282 A
(43) Publication Date : 20/01/2017

(54) Title of the invention : UNIFIED RATING SYSTEM AND METHOD FOR SELECTIVELY BLOCKING CONTENT

(51) International classification :G11B20/00,H04N21/454,H04N21/475
(31) Priority Document No:14/218505
(32) Priority Date :18/03/2014
(33) Name of priority country :U.S.A.
(86) International Application No :PCT/IB2015/051956
Filing Date :17/03/2015
(87) International Publication No :WO 2015/140716
(61) Patent of Addition to Application Number :NA
Filing Date :NA
(62) Divisional to Application Number :NA
Filing Date :NA

(71)**Name of Applicant :**
1)TELEFONAKTIEBOLAGET LM ERICSSON (PUBL)
Address of Applicant :S 164 83 Stockholm Sweden
(72)**Name of Inventor :**
1)SHETTY Bharath

(57) Abstract :
A universal content rating scheme that involves defining a set of universal rating categories each configured with at least a lock bit associated therewith and mapping each universal rating category to at least one rating category of a content rating system available with respect to content from one or more content sources. The universal rating categories may be selectively blocked and/or unblocked by appropriately configuring lock bit logic associated therewith which blocking/unblocking settings may be applied to all existing content rating categories based on their mapping to corresponding universal rating categories.

No. of Pages : 24 No. of Claims : 21

(12) PATENT APPLICATION PUBLICATION
(19) INDIA
(22) Date of filing of Application :21/09/2016
(21) Application No.201617032283 A
(43) Publication Date : 20/01/2017

(54) Title of the invention : HYBRID DRIVE TRAIN

(51) International classification :B60W50/14,B60K6/12,B60K6/48
(31) Priority Document No :10 2014 205 329.3
(32) Priority Date :21/03/2014
(33) Name of priority country :Germany
(86) International Application No :PCT/EP2015/053468
Filing Date :19/02/2015
(87) International Publication No :WO 2015/139909
(61) Patent of Addition to Application Number :NA
Filing Date :NA
(62) Divisional to Application Number :NA
Filing Date :NA

(71)**Name of Applicant :**
1)ROBERT BOSCH GMBH
Address of Applicant :Postfach 30 02 20 70442 Stuttgart Germany
(72)**Name of Inventor :**
1)OSCHMANN Sebastian
2)BITTNER Ulrich

(57) Abstract :
The invention relates to a hybrid drive train (1) comprising an internal combustion engine (6) as a primary drive (4) a secondary drive (10) and a manual transmission (20) which can be manually actuated by a driver. In order to simplify the operation of a hybrid drive train an acoustic signal device (30) is used to alert the driver acoustically of the necessity to manually change gears.

No. of Pages : 8 No. of Claims : 10

(12) PATENT APPLICATION PUBLICATION
(19) INDIA
(22) Date of filing of Application :21/09/2016
(21) Application No.201617032284 A
(43) Publication Date : 20/01/2017

(54) Title of the invention : HYDRAULIC DRIVE

(51) International classification :F15B20/00
(31) Priority Document No :10 2014 205 333.1
(32) Priority Date :21/03/2014
(33) Name of priority country :Germany
(86) International Application No :PCT/EP2015/053477
Filing Date :19/02/2015
(87) International Publication No :WO 2015/139910
(61) Patent of Addition to Application Number :NA
Filing Date :NA
(62) Divisional to Application Number :NA
Filing Date :NA

(71)**Name of Applicant :**
1)ROBERT BOSCH GMBH
Address of Applicant :Postfach 30 02 20 70442 Stuttgart Germany
(72)**Name of Inventor :**
1)GREINER Matthias

(57) Abstract :
The invention relates to a hydraulic drive comprising at least one hydraulic machine (11 12) in a hydraulic system (25) which has a high pressure side (16) and a low pressure side (13). In order to simplify the operation of a hydraulic drive said hydraulic system (25) comprises a normally open safety valve (30) which in an open position (Fig 1) allows pressure to be reduced on the high pressure side.

No. of Pages : 10 No. of Claims : 10

(12) PATENT APPLICATION PUBLICATION
(19) INDIA
(22) Date of filing of Application :21/09/2016
(21) Application No.201617032285 A
(43) Publication Date : 20/01/2017

(54) Title of the invention : MEMORY PHYSICAL LAYER INTERFACE LOGIC FOR GENERATING DYNAMIC RANDOM ACCESS MEMORY (DRAM) COMMANDS WITH PROGRAMMABLE DELAYS

(51) International classification	:G11C11/4093,G11C11/4096,G11C7/10
(31) Priority Document No	:14/318065
(32) Priority Date	:27/06/2014
(33) Name of priority country	:U.S.A.
(86) International Application No	:PCT/US2015/037172
Filing Date	:23/06/2015
(87) International Publication No	:WO 2015/200318
(61) Patent of Addition to Application Number	:NA
Filing Date	:NA
(62) Divisional to Application Number	:NA
Filing Date	:NA

(71)**Name of Applicant :**
1)ADVANCED MICRO DEVICES INC.
Address of Applicant :One AMD Place Sunnyvale California 94088 U.S.A.
(72)**Name of Inventor :**
1)DEARTH Glenn A.
2)TALBOT Gerry

(57) Abstract :
A plurality of registers (222) implemented in association with a memory physical layer interface (PHY) (140 205) can be used to store one or more instruction words (300) that indicate one or more commands and one or more delays (415 515 535 540). A training engine (220) implemented in the memory PHY can generate at speed programmable sequences of commands (410 420 430 510 520 525) for delivery to an external memory (210) and to delay the commands based on the one or more delays. The at speed programmable sequences of commands can be generated based on the one or more instruction words.

No. of Pages : 16 No. of Claims : 17

(12) PATENT APPLICATION PUBLICATION
(19) INDIA
(22) Date of filing of Application :21/09/2016
(21) Application No.201617032286 A
(43) Publication Date : 20/01/2017

(54) Title of the invention : SYSTEM AND METHOD FOR MEMORY ALLOCATION IN A MULTICLASS MEMORY SYSTEM

(51) International classification :G06F12/08,G06F12/02
(31) Priority Document No :14/273751
(32) Priority Date :09/05/2014
(33) Name of priority country :U.S.A.
(86) International Application No :PCT/US2015/029369
Filing Date :06/05/2015
(87) International Publication No :WO 2015/171695
(61) Patent of Addition to Application Number :NA
Filing Date :NA
(62) Divisional to Application Number :NA
Filing Date :NA

(71)**Name of Applicant :**
1)ADVANCED MICRO DEVICES INC.
Address of Applicant :One AMD Place Sunnyvale California 94088 U.S.A.
(72)**Name of Inventor :**
1)LOH Gabriel
2)MESWANI Mitesh
3)IGNATOWSKI Michael
4)NUTTER Mark

(57) Abstract :
A system (100) for memory allocation in a multiclass memory system (101) includes a processor (102) coupleable to a plurality of memories (106 107 108 109) sharing a unified memory address space and a library (120 620) to store a library of software functions. The processor identifies a type of a data structure (128) in response to a memory allocation function call (126) to the library for allocating memory to the data structure. Using the library the processor allocates portions of the data structure among multiple memories of the multiclass memory system based on the type of the data structure.

No. of Pages : 14 No. of Claims : 16

(12) PATENT APPLICATION PUBLICATION
(21) Application No.201617032287 A
(19) INDIA
(22) Date of filing of Application :21/09/2016
(43) Publication Date : 20/01/2017

(54) Title of the invention : SOLVENT COMPOSITION AND PROCESS FOR REMOVAL OF ASPHALT AND OTHER CONTAMINANT MATERIALS

(51) International classification :C11D3/44,C11D1/62,C11D7/50
(31) Priority Document No :61/969125
(32) Priority Date :22/03/2014
(33) Name of priority country :U.S.A.
(86) International Application No:PCT/US2015/022051
Filing Date :23/03/2015
(87) International Publication No :WO 2015/148396
(61) Patent of Addition to Application Number :NA
Filing Date :NA
(62) Divisional to Application Number :NA
Filing Date :NA

(71)**Name of Applicant :**
1)UNITED LABORATORIES INTERNATIONAL LLC
Address of Applicant :12600 North Featherwood Suite 330 Houston Texas 77034 U.S.A.
(72)**Name of Inventor :**
1)MATZA Stephen D.
2)ARCHULETA Dana M.

(57) Abstract :
A method and composition for removing contaminant material from industrial equipment are disclosed herein. The method includes providing a solvent composition having methyl soyate methylpyrrolidinone an additional solvent and a cationic surfactant. The method also includes contacting the contaminant material with the solvent composition and allowing the solvent composition to react with the contaminant material such that at least a portion of the contaminant material is no longer attached to the industrial equipment.

No. of Pages : 14 No. of Claims : 20

(12) PATENT APPLICATION PUBLICATION
(19) INDIA
(22) Date of filing of Application :20/09/2016
(21) Application No.201617032113 A
(43) Publication Date : 20/01/2017

(54) Title of the invention : EJECTOR ARRANGEMENT

(51) International classification :F04F5/04,F25B41/00
(31) Priority Document No :14168252.6
(32) Priority Date :14/05/2014
(33) Name of priority country :EPO
(86) International Application No :PCT/EP2015/060599
Filing Date :13/05/2015
(87) International Publication No :WO 2015/173305
(61) Patent of Addition to Application Number :NA
Filing Date :NA
(62) Divisional to Application Number :NA
Filing Date :NA

(71)**Name of Applicant :**
1)DANFOSS A/S
Address of Applicant :Nordborgvej 81 DK 6430 Nordborg Denmark
(72)**Name of Inventor :**
1)BIRKELUND Michael

(57) Abstract :
An ejector arrangement (1) is provided comprising a housing (5) at least two ejectors (2) arranged in said housing (5) each ejector (2) having a motive inlet (3) a suction inlet (29) an outlet (11) and a longitudinal axis (17). Such an arrangement should have a simple construction. To this end said suction inlet (29) of said ejectors (2) are connected by means of fluid paths to a common suction line (8).

No. of Pages : 11 No. of Claims : 15

(12) PATENT APPLICATION PUBLICATION
(19) INDIA
(22) Date of filing of Application :20/09/2016
(21) Application No.201617032115 A
(43) Publication Date : 20/01/2017

(54) Title of the invention : MOTOR VEHICLE LOCK ASSEMBLY

(51) International classification :E05B81/20,E05B81/14,E05B81/22
(31) Priority Document No :10 2014 205 371.4
(32) Priority Date :22/03/2014
(33) Name of priority country :Germany
(86) International Application No :PCT/EP2015/055676
Filing Date :18/03/2015
(87) International Publication No :WO 2015/144526
(61) Patent of Addition to Application Number :NA
Filing Date :NA
(62) Divisional to Application Number :NA
Filing Date :NA

(71)**Name of Applicant :**
1)BROSE SCHLIESSSYSTEME GMBH & CO. KG
Address of Applicant :Otto Hahn Strae 34 42369 Wuppertal Germany
(72)**Name of Inventor :**
1)WIRTHS Rainer

(57) Abstract :
The invention relates to a motor vehicle lock assembly for a closing element (3) movably coupled to a motor vehicle body (2) wherein a motor vehicle lock (5) is provided which is arranged on the closing element (3) or on the motor vehicle body (2) in the installed state. According to the invention a movement drive (6) for applying a driving force to the closing element (3) in an opening direction of the closing element is provided such that the closing element (3) can be moved from a closed position to a gap position in a motorized opening process and thereby an intrusion gap (8) can be produced between the closing element (3) and the motor vehicle body (2).

No. of Pages : 10 No. of Claims : 19

(12) PATENT APPLICATION PUBLICATION
(19) INDIA
(22) Date of filing of Application :20/09/2016
(21) Application No.201617032116 A
(43) Publication Date : 20/01/2017

(54) Title of the invention : INTEGRATED CONTROLLER FOR TRAINING MEMORY PHYSICAL LAYER INTERFACE

(51) International classification :G06F12/08,G06F13/16
(31) Priority Document No :14/318114
(32) Priority Date :27/06/2014
(33) Name of priority country :U.S.A.
(86) International Application No :PCT/US2015/037210
Filing Date :23/06/2015
(87) International Publication No :WO 2015/200338
(61) Patent of Addition to Application Number :NA
Filing Date :NA
(62) Divisional to Application Number :NA
Filing Date :NA

(71)**Name of Applicant :**
1)ADVANCED MICRO DEVICES INC.
Address of Applicant :One AMD Place Sunnyvale California 94088 U.S.A.
(72)**Name of Inventor :**
1)DEARTH Glenn A.
2)TALBOT Gerry
3)KASHEM Anwar
4)PRETE Edoardo
5)AMICK Brian

(57) Abstract :
A controller (215) integrated in a memory physical layer interface (PHY) (140 205) can be used to control training used to configure the memory PHY for communication with an associated external memory (135) such as a dynamic random access memory (DRAM) thereby removing the need to provide training sequences over a data pipeline between a BIOS (120) and the memory PHY. For example a controller (215) integrated in the memory PHY can control read training and write training of the memory PHY for communication with the external memory based on a training algorithm. The training algorithm may be a seedless training algorithm that converges on a solution for a timing delay and a voltage offset between the memory PHY and the external memory without receiving from the BIOS seed information that characterizes a signal path traversed by training sequences or commands generated by the training algorithm.

No. of Pages : 13 No. of Claims : 18

(12) PATENT APPLICATION PUBLICATION
(21) Application No.201617032127 A
(19) INDIA
(22) Date of filing of Application :21/09/2016
(43) Publication Date : 20/01/2017

(54) Title of the invention : PREPARATION OF ALDEHYDES AND KETONES FROM ALKENES USING POLYOXOMETALATE CATALYSTS AND NITROGEN OXIDES

(51) International classification :B01J27/186
(31) Priority Document No :61/946806
(32) Priority Date :02/03/2014
(33) Name of priority country :U.S.A.
(86) International Application No :PCT/IL2015/050221
Filing Date :01/03/2015
(87) International Publication No :WO 2015/132780
(61) Patent of Addition to Application Number :NA
Filing Date :NA
(62) Divisional to Application Number :NA
Filing Date :NA

(71)**Name of Applicant :**
1)YEDA RESEARCH AND DEVELOPMENT CO. LTD.
Address of Applicant :at The Weizmann Institute of Science PO Box 95 7610002 Rehovot Israel
(72)**Name of Inventor :**
1)NEUMANN Ronny
2)RUBINSTEIN Amir

(57) Abstract :
The present invention relates to a process for preparing aldehydes and ketones by carbon carbon bond cleavage of alkenes wherein the process is catalysed by first row transition metal nitro coordinated polyoxometalate catalyst. The catalyst can be prepared by pre treatment of aqua coordinated polyoxometalates with NO or they are formed in situ when the reactions are carried in nitroalkanes under aerobic conditions or they are formed in situ from nitrosyl (NO) compounds in the presence of O.

No. of Pages : 29 No. of Claims : 32

(12) PATENT APPLICATION PUBLICATION
(19) INDIA
(22) Date of filing of Application :21/09/2016
(21) Application No.201617032131 A
(43) Publication Date : 20/01/2017

(54) Title of the invention : METHOD OF MAKING CERAMIC GLASS

(51) International classification :C03C27/00
(31) Priority Document No :61/955543
(32) Priority Date :19/03/2014
(33) Name of priority country :U.S.A.
(86) International Application No :PCT/US2015/021547
Filing Date :19/03/2015
(87) International Publication No :WO 2015/143206
(61) Patent of Addition to Application Number :NA
Filing Date :NA
(62) Divisional to Application Number :NA
Filing Date :NA

(71)**Name of Applicant :**
1)SOLAR TECTIC LLC
Address of Applicant :416 Long Hill Road East Briarcliff Manor NY 10510 U.S.A.
2)BLUE WAVE SEMICONDUCTORS INC.
(72)**Name of Inventor :**
1)VISPUTE Ratnakar D.
2)CHAUDHARI Ashok

(57) Abstract :
A method is provided for manufacturing ceramic glass including sapphire glass for use in display covers in smartphones computers and watches as well as for use as substrates on which semiconductor films can be deposited for a wide range of electronic applications including solar cells LEDs and FETs.

No. of Pages : 12 No. of Claims : 20

(12) PATENT APPLICATION PUBLICATION
(21) Application No.201617032451 A
(19) INDIA
(22) Date of filing of Application :22/09/2016
(43) Publication Date : 20/01/2017

(54) Title of the invention : METHOD OF PRODUCING PRESS HARDENED AND COATED STEEL PARTS AT A HIGH PRODUCTIVITY RATE

(51) International classification :C09D5/32,C23C2/26,C23C2/28
(31) Priority Document No :PCT/IB2014/000455
(32) Priority Date :31/03/2014
(33) Name of priority country :PCT
(86) International Application No :PCT/IB2015/000143
Filing Date :13/02/2015
(87) International Publication No :WO 2015/150892
(61) Patent of Addition to Application Number :NA
Filing Date :NA
(62) Divisional to Application Number :NA
Filing Date :NA

(71)**Name of Applicant :**
1)ARCELORMITTAL
Address of Applicant :24 26 Boulevard dAvranches L 1160 Luxembourg Luxembourg
(72)**Name of Inventor :**
1)DESSAIN Christine
2)SANADRES Michel

(57) Abstract :
The invention relates to a pre coated blank or metal sheet comprising a steel substrate for heat treatment at least part of at least one of its main faces being covered by a pre coating comprising at least one layer of aluminium or aluminium alloy covered on at least part of the pre coating by a polymerized layer which is between 2 and 30 micrometres thick and is composed of a polymer which contains no silicon and of which the nitrogen content is less than 1 wt.% expressed relative to the layer the polymerized layer containing carbonated pigments in a quantity of between 3 and 30 wt.% expressed relative to the layer.

No. of Pages : 28 No. of Claims : 22

(12) PATENT APPLICATION PUBLICATION
(19) INDIA
(22) Date of filing of Application :22/09/2016
(21) Application No.201617032458 A
(43) Publication Date : 20/01/2017

(54) Title of the invention : CALIBRATING A POWER SUPPLY USING POWER SUPPLY MONITORS

(51) International classification :G06F1/28,G06F1/32,G01R31/01
(31) Priority Document No :14/314790
(32) Priority Date :25/06/2014
(33) Name of priority country :U.S.A.
(86) International Application No :PCT/US2015/037158
Filing Date :23/06/2015
(87) International Publication No :WO 2015/200310
(61) Patent of Addition to Application Number :NA
Filing Date :NA
(62) Divisional to Application Number :NA
Filing Date :NA

(71)**Name of Applicant :**
1)ADVANCED MICRO DEVICES INC.
Address of Applicant :One AMD Place Sunnyvale California 94088 U.S.A.
2)ATI TECHNOLOGIES ULC
(72)**Name of Inventor :**
1)GRENAT Aaron J.
2)HERSHBERGER Robert A.
3)SAMBAMURTHY Sriram
4)NAFFZIGER Samuel D.
5)TRESSLER Christopher E.
6)KANG Sho Chien
7)SHANNON Joseph P.
8)BERNUCHO Krishna Sai
9)CHINCHOLI Ashwin
10)AUSTIN Michael J.
11)LIEPE Steven F.
12)CHEEMA Umair B.

(57) Abstract :
A processing system (100) includes one or more power supply monitors (PSMs) (200) to measure one or more first voltages corresponding to one or more locations in the processing system. The measurements are performed concurrently with the processing system executing one or more code loops. The processing system also includes calibration logic (135 705) to modify a second voltage provided to the processing system based on a comparison of a reference voltage and the one or more first voltages. The reference voltage is determined based on previous execution of the one or more code loops by the processing system.

No. of Pages : 13 No. of Claims : 16

(12) PATENT APPLICATION PUBLICATION
(19) INDIA
(22) Date of filing of Application :22/09/2016
(21) Application No.201617032459 A
(43) Publication Date : 20/01/2017

(54) Title of the invention : SENSOR

(51) International classification :A61B5/05,G02B1/00,A61B5/053
(31) Priority Document No :1403389.8
(32) Priority Date :26/02/2014
(33) Name of priority country :U.K.
(86) International Application No :PCT/GB2015/050561
Filing Date :26/02/2015
(87) International Publication No :WO 2015/128657
(61) Patent of Addition to Application Number :NA
Filing Date :NA
(62) Divisional to Application Number :NA
Filing Date :NA

(71)**Name of Applicant :**
1)MEDICAL WIRELESS SENSING LTD
Address of Applicant :Suite 7 QMB Innovation Centre 42 New Road London E1 2AX U.K.
(72)**Name of Inventor :**
1)PALIKARAS Georgios
2)KALLOS Efthymios
3)CANO GARCIA Helena

(57) Abstract :
There is provided a device arranged to couple electromagnetic radiation into or out of a biological material. The device comprises a first metamaterial comprising: a substrate component having a thickness no greater than a first wavelength of the electromagnetic radiation; and a plurality of elements supported by the substrate component wherein each element has a first dimension no greater than a first wavelength of the electromagnetic radiation and at least two of the elements of the plurality of elements are non identical.

No. of Pages : 28 No. of Claims : 36

(12) PATENT APPLICATION PUBLICATION
(19) INDIA
(22) Date of filing of Application :22/09/2016
(21) Application No.201617032460 A
(43) Publication Date : 20/01/2017

(54) Title of the invention : FOODSTUFF COMPRISING PROTEINS ESSENTIALY OF VEGETABLE ORIGIN AND PROCESS FOR PREPARING SAME

(51) International classification :A23J3/34,A23J3/14,A23J3/16
(31) Priority Document No :14 00765
(32) Priority Date :28/03/2014
(33) Name of priority country :France
(86) International Application No :PCT/FR2015/050795
Filing Date :27/03/2015
(87) International Publication No :WO 2015/145089
(61) Patent of Addition to Application Number :NA
Filing Date :NA
(62) Divisional to Application Number :NA
Filing Date :NA

(71)**Name of Applicant :**
1)ONYX DEVELOPPEMENT SAS
Address of Applicant :Bois du Roule F 76770 Malaunay France
(72)**Name of Inventor :**
1)LORAND Jean Paul
2)KANDIL Lamisse
3)DHUART Jean Baptiste

(57) Abstract :
The invention relates to a foodstuff comprising proteins essentially of vegetable origin capable of being obtained by a process comprising the steps consisting in: (iv) selecting a natural source of vegetable proteins comprising nutrients: (v) extracting a vegetable juice from the natural source of vegetable proteins said vegetable juice comprising almost all or all of the nutrients contained in the natural source of vegetable proteins; and (vi) treating said vegetable juice from step (ii) with transglutaminase characterized in that when the natural source of vegetable proteins consists exclusively of soya said foodstuff also comprises a food ingredient of non animal origin.

No. of Pages : 24 No. of Claims : 15

(12) PATENT APPLICATION PUBLICATION
(19) INDIA
(22) Date of filing of Application :22/09/2016
(21) Application No.201617032466 A
(43) Publication Date : 20/01/2017

(54) Title of the invention : HIGH AIR TIGHTNESS DEVICE

(51) International classification :H01S3/02
(31) Priority Document No :201410060566.3
(32) Priority Date :24/02/2014
(33) Name of priority country :China
(86) International Application No :PCT/CN2015/073073
Filing Date :14/02/2015
(87) International Publication No :WO 2015/124093
(61) Patent of Addition to Application Number :NA
Filing Date :NA
(62) Divisional to Application Number :NA
Filing Date :NA

(71)**Name of Applicant :**
1)MA Yaowu
Address of Applicant :Room 2101 Bldg.3 Community of Henan Province Department of Water Resources No.10 Weiwu Rd. Jinshui District Zhengzhou Henan 450003 China
(72)**Name of Inventor :**
1)MA Yaowu

(57) Abstract :
A high air tightness device is provided with a bottom plate (1) a frame body wall (2) and a shell body cover (3). The materials of said parts are one and more of metal glass and ceramic and the junctions among the parts are sealed by extruding a hollow core metal sealing ring (12) by thread. The device is provided with one and more of a window glass (17) a pipeline (10) a pipeline interface an openable and closable valve (11) an electrode communicating inside with outside and a threaded opening and the device is connected and sealed by extruding the hollow core metal sealing ring using the internal or external threaded part to move straight or rotate; or the device is pre sealing formed by one and more of a metal solder welding processing technique a metal welding processing technique a glass welding processing technique and a sintering ceramic formed processing technique. The materials of each part for isolating inside from outside during the sealing are one and more of metal glass and ceramic. Vacuum special gas and liquid can be sealed within the high air tightness device for a long time. The high air tightness device is easy to be disconnected and sealed again and has easy maintenance and low cost.

No. of Pages : 10 No. of Claims : 22

(12) PATENT APPLICATION PUBLICATION
(21) Application No.201617032743 A
(19) INDIA
(22) Date of filing of Application :26/09/2016
(43) Publication Date : 20/01/2017

(54) Title of the invention : SEALED CONTAINER FOR PRESSURIZED BEVERAGE AND MANUFACTURING METHOD THEREFOR

(51) International classification :B65D41/42,B67B3/02
(31) Priority Document No :2014083484
(32) Priority Date :15/04/2014
(33) Name of priority country :Japan
(86) International Application No :PCT/JP2015/061190
Filing Date :10/04/2015
(87) International Publication No :WO 2015/159809
(61) Patent of Addition to Application Number :NA
Filing Date :NA
(62) Divisional to Application Number :NA
Filing Date :NA

(71)**Name of Applicant :**
1)NIPPON CLOSURES CO. LTD.
Address of Applicant :2 18 1 Higashigotanda Shinagawa ku Tokyo 1410022 Japan
(72)**Name of Inventor :**
1)KITANO Koji
2)KONDO Haruhiko
3)FUKUOKA Yuko
4)KUMATA Mitsuo
5)ICHIMURA Katsuhito
6)OKUBO Yusuke

(57) Abstract :
Provided is a sealed container for a pressurized beverage the container having a cap with which gas tightness can be improved. The sealed beverage container is provided with a beverage container and a cap. The beverage container has a body section and a flange. The flange is connected to the upper part of the body section and defines the opening. The cap is fitted on the beverage container so as to seal the opening. The cap has a liner and an outer cover. The liner has a thin liner section for sealing the lower part of the side surface of the flange and a thick liner section for sealing the upper part of the side surface of the flange. The outer cover is fixed to the flange so as to cover the liner from the outside and seal the opening together with the liner. The outer cover is made to adhere tightly by pressing the thin liner section on the lower part of the side surface of the flange.

No. of Pages : 19 No. of Claims : 6

(12) PATENT APPLICATION PUBLICATION
(19) INDIA
(22) Date of filing of Application :26/09/2016
(21) Application No.201617032744 A
(43) Publication Date : 20/01/2017

(54) Title of the invention : STRADDLED VEHICLE

(51) International classification :F02D11/10,F02D9/10,F02B61/02
(31) Priority Document No :2014059069
(32) Priority Date :20/03/2014
(33) Name of priority country :Japan
(86) International Application No :PCT/JP2015/058141
Filing Date :18/03/2015
(87) International Publication No :WO 2015/141749
(61) Patent of Addition to Application Number :NA
Filing Date :NA
(62) Divisional to Application Number :NA
Filing Date :NA

(71)**Name of Applicant :**
1)HONDA MOTOR CO. LTD.
Address of Applicant :1 1 Minami Aoyama 2 chome Minato ku Tokyo 1078556 Japan
2)KEIHIN CORPORATION
(72)**Name of Inventor :**
1)NAOI Yasuo
2)ICHIKAWA Tetta

(57) Abstract :
A throttle motor (26) is arranged between an upper surface of an engine (2) and an air intake passage as seen from the side of a vehicle. Furthermore the throttle motor (26) is arranged such that a horizontal line (H1) passing through the lower end of the throttle motor (26) overlaps a chain tensioner (33) and an axial center section (26a) of the throttle motor (26) is misaligned from the chain tensioner (33) in a forward rearward direction.

No. of Pages : 22 No. of Claims : 6

(12) PATENT APPLICATION PUBLICATION
(21) Application No.201617032750 A
(19) INDIA
(22) Date of filing of Application :26/09/2016
(43) Publication Date : 20/01/2017

(54) Title of the invention : METHOD FOR THE SYNTHESIS OF SUPPORTED GOLD (AU) NANOPARTICLES FOR EPOXIDATION REACTIONS

(51) International classification :B01J37/08,B01J23/52,B01J21/06
(31) Priority Document No :61/982498
(32) Priority Date :22/04/2014
(33) Name of priority country :U.S.A.
(86) International Application No :PCT/IB2015/052917
Filing Date :21/04/2015
(87) International Publication No :WO 2015/162562
(61) Patent of Addition to Application Number :NA
Filing Date :NA
(62) Divisional to Application Number :NA
Filing Date :NA

(71)**Name of Applicant :**
1)SABIC GLOBAL TECHNOLOGIES B.V.
Address of Applicant :Plasticslaan 1 NL 4612 PX Bergen op Zoom Netherlands
(72)**Name of Inventor :**
1)AL HAZMI Mohammed H.

(57) Abstract :
Processes for preparing supported gold nanoparticle catalysts are provided. In an exemplary embodiment the process includes adding a solution of a phosphorus compound to a solution of chloro (dimethyl sulfide) gold (I) to obtain a solution of chloro (phosphorus compound) gold (I) complex adding the solution of chloro (phosphorus compound) gold (I) complex to a solution of silver nitrate to obtain a solution of nitro (phosphorus compound) gold (I) complex applying the solution of nitro (phosphorus compound) gold (I) complex to a metal hydroxide support drying the metal hydroxide support; and calcining the dried metal hydroxide support to form the supported gold nanoparticle catalyst. Supported gold nanoparticle catalysts prepared by the process and processes for oxidizing ethylene to ethylene oxide in the presence of the supported gold nanoparticle catalysts are also provided.

No. of Pages : 19 No. of Claims : 20

(12) PATENT APPLICATION PUBLICATION
(19) INDIA
(22) Date of filing of Application :26/09/2016
(21) Application No.201617032751 A
(43) Publication Date : 20/01/2017

(54) Title of the invention : ULTRA WIDE BAND DETECTORS

(51) International classification :G01N22/00
(31) Priority Document No :61/949775
(32) Priority Date :07/03/2014
(33) Name of priority country :U.S.A.
(86) International Application No :PCT/US2015/019049
Filing Date :05/03/2015
(87) International Publication No :WO 2015/134802
(61) Patent of Addition to Application Number :NA
Filing Date :NA
(62) Divisional to Application Number :NA
Filing Date :NA

(71)**Name of Applicant :**
1)RAPISCAN SYSTEMS INC.
Address of Applicant :2805 Columbia Street Torrance CA 90503 U.S.A.
(72)**Name of Inventor :**
1)MORTON Edward James
2)PEYTON Anthony J.

(57) Abstract :
An ultra wide band microwave based personnel/passenger screening system and in particular a system for material specific detection uses non ionizing radiation in which focused beams of low intensity microwave radiation are projected in rapid succession at an individual as they walk through a portal which has a funneled entrance and a funneled exit with the portal between the funnels.

No. of Pages : 22 No. of Claims : 33

(12) PATENT APPLICATION PUBLICATION
(19) INDIA
(22) Date of filing of Application :26/09/2016
(21) Application No.201617032752 A
(43) Publication Date : 20/01/2017

(54) Title of the invention : APPARATUS SYSTEM AND METHOD FOR BLASTING

(51) International classification :F42D1/05,F42C15/42,F42B3/11
(31) Priority Document No :61/971205
(32) Priority Date :27/03/2014
(33) Name of priority country :U.S.A.
(86) International Application No :PCT/AU2015/050122
Filing Date :23/03/2015
(87) International Publication No :WO 2015/143502
(61) Patent of Addition to Application Number :NA
Filing Date :NA
(62) Divisional to Application Number :NA
Filing Date :NA

(71)**Name of Applicant :**
1)ORICA INTERNATIONAL PTE LTD
Address of Applicant :78 Shenton Way #06 15 Tower 2 Singapore 079120 Singapore
(72)**Name of Inventor :**
1)APPLEBY Rodney

(57) Abstract :
An initiator apparatus (IA) for blasting the apparatus including: a magnetic receiver for receiving a magnetic communication signal through the ground by detection of a magnetic field; a controller in electrical communication with the magnetic receiver for processing the magnetic communication signal to determine a command for blasting; and a light source in electrical communication with the controller for generating a light beam to initiate a light sensitive explosive (LSE) in accordance with the command.

No. of Pages : 25 No. of Claims : 35

(12) PATENT APPLICATION PUBLICATION
(21) Application No.201617032288 A
(19) INDIA
(22) Date of filing of Application :21/09/2016
(43) Publication Date : 20/01/2017

(54) Title of the invention : METHODS FOR REDUCING CHROMATIN CONTENT IN PROTEIN PREPARATIONS BY TREATMENT WITH ALKYL CATIONS

(51) International classification :C07K1/16,B01D15/26
(31) Priority Document No :NA
(32) Priority Date :NA
(33) Name of priority country :NA
(86) International Application No :PCT/SG2014/000087
Filing Date :27/02/2014
(87) International Publication No :WO 2015/130223
(61) Patent of Addition to Application Number :NA
Filing Date :NA
(62) Divisional to Application Number :NA
Filing Date :NA

(71)**Name of Applicant :**
1)AGENCY FOR SCIENCE TECHNOLOGY AND RESEARCH
Address of Applicant :1 Fusionopolis Way #20 10 Connexis Singapore 138632 Singapore
(72)**Name of Inventor :**
1)GAGNON Peter Stanley

(57) Abstract :
A method of reducing aggregate content in a preparation having a target protein includes contacting the preparation with an alkyl cation to form a mixture and contacting the mixture with at least one functionalized solid to remove excess alkyl cation.

No. of Pages : 16 No. of Claims : 15

(12) PATENT APPLICATION PUBLICATION
(21) Application No.201617032289 A
(19) INDIA
(22) Date of filing of Application :21/09/2016
(43) Publication Date : 20/01/2017

(54) Title of the invention : ANTIBODY PURIFICATION PROCESS

(51) International classification :C07K1/14
(31) Priority Document No :NA
(32) Priority Date :NA
(33) Name of priority country :NA
(86) International Application No :PCT/SG2014/000086
Filing Date :27/02/2014
(87) International Publication No :WO 2015/130222
(61) Patent of Addition to Application Number :NA
Filing Date :NA
(62) Divisional to Application Number :NA
Filing Date :NA

(71)**Name of Applicant :**
1)AGENCY FOR SCIENCE TECHNOLOGY AND RESEARCH
Address of Applicant :1 Fusionopolis Way #20 10 Connexis Singapore 138632 Singapore
(72)**Name of Inventor :**
1)GAGNON Peter Stanley

(57) Abstract :
A method of purifying a target antibody includes contacting a cell culture harvest or a protein preparation including at least one target antibody with at least one fatty acid having 7 to 10 carbon atoms to form a mixture contacting this mixture with allantoin and then separating solid materials to provide a solution comprising the target antibody. Solid materials can be removed by filtration sedimentation or centrifugation and the fatty acids can be enanthic caprylic pelargonic nonenoic or capric acid. The invention is also directed to kits used to facilitate this method of antibody purification.

No. of Pages : 32 No. of Claims : 21

(12) PATENT APPLICATION PUBLICATION
(19) INDIA
(22) Date of filing of Application :21/09/2016
(21) Application No.201617032292 A
(43) Publication Date : 20/01/2017

(54) Title of the invention : SYSTEM AND METHOD FOR BEAM BASED PHYSICAL RANDOM ACCESS

(51) International classification :H04W74/00,H04W16/28,H04W72/04
(31) Priority Document No :61/970145
(32) Priority Date :25/03/2014
(33) Name of priority country :U.S.A.
(86) International Application No :PCT/SE2014/050986
Filing Date :27/08/2014
(87) International Publication No :WO 2015/147717
(61) Patent of Addition to Application Number :NA
Filing Date :NA
(62) Divisional to Application Number :NA
Filing Date :NA

(71)**Name of Applicant :**
1)TELEFONAKTIEBOLAGET LM ERICSSON (PUBL)
Address of Applicant :S 164 83 Stockholm Sweden
(72)**Name of Inventor :**
1)FRENNE Mattias
2)ZHANG Qiang
3)SAHLIN Henrik
4)PARKVALL Stefan
5)FURUSKOG Johan
6)ANDERSSON Hkan

(57) Abstract :
A method in a wireless device for performing random access to a network node. The method comprises receiving a set of downlink beam specific reference signals BRS from the network node and determining a preferred BRS based on the received signal power for each BRS. The method also comprises selecting based on the preferred BRS a random access resource to be used for transmitting a random access attempt to the network node as well as using the selected random access resource when transmitting a random access attempt to the network node whereby the selection of random access resource indicates to the network node which downlink beam is preferred by the wireless device to be used for downlink transmissions.

No. of Pages : 34 No. of Claims : 29

(12) PATENT APPLICATION PUBLICATION
(19) INDIA
(22) Date of filing of Application :21/09/2016
(21) Application No.201617032293 A
(43) Publication Date : 20/01/2017

(54) Title of the invention : DEVICES METHODS AND GRAPHICAL USER INTERFACES FOR MANIPULATING USER INTERFACE OBJECTS WITH VISUAL AND/OR HAPTIC FEEDBACK

(51) International classification	:G06F3/0484,G06F3/0482,G06F3/01
(31) Priority Document No	:62/129954
(32) Priority Date	:08/03/2015
(33) Name of priority country	:U.S.A.
(86) International Application No	:PCT/US2016/021400
Filing Date	:08/03/2016
(87) International Publication No	:WO 2016/144975
(61) Patent of Addition to Application Number	:NA
Filing Date	:NA
(62) Divisional to Application Number	:NA
Filing Date	:NA

(71)**Name of Applicant :**
1)APPLE INC.
Address of Applicant :1 Infinite Loop Cupertino CA 95014 U.S.A.
(72)**Name of Inventor :**
1)FOSS Christopher P.
2)ANZURES Freddy A.
3)DASCOLA Jonathan R.
4)YANG Lawrence Y.
5)WAN Wan Si
6)BAUER Sebastian J.
7)PU Daniel E.
8)BACHMAN William M.
9)CHANG Jae Woo
10)GUTKNECHT Olivier D.r.
11)HAJAS Peter J.
12)TEUTSCHLER Sophia
13)FRINGES Alexander C.d.
14)KARUNAMUNI Chanaka G.
15)APODACA Gregory M.
16)CHAUDHRI Imran A.
17)ALONSO RUIZ Marcos
18)DYE Alan C.
19)IVE Jonathan
20)JISWARI Mohammed N.
21)JUREWITZ Michael T.
22)MOUSSETTE Camille
23)KOCIENDA Kenneth L.
24)LEMAY Stephen O.
25)YERKES Giancarlo
26)KING Nicholas V.
27)MANZARI Behkish J.
28)PENHA Henrique D.
29)PRESTON Daniel T.
30)WILSON Christopher I.
31)LEONARD Adam J.
32)TROTTIER Lauren K.
33)FEDERIGHI Craig M.
34)MIGOS Charles J.
35)LOPATIN Scott
36)STYER Allison M.
37)ROCHETTE Tommy

(57) Abstract :
An electronic device with a touch sensitive surface a display and one or more sensors to detect intensity of contacts: displays a plurality of user interface objects in a first user interface; detects a contact while a focus selector is at a location of a first user interface object; and while the focus selector is at the location of the first user interface object: detects an increase in a characteristic intensity of the contact to a first intensity threshold; in response visually obscures the plurality of user interface objects other than the first user interface object while maintaining display of the first user interface object; detects that the characteristic intensity of the contact continues to increase above the first intensity threshold; and in response dynamically increases the amount of visual obscuring of the plurality of user interface objects other than the first user interface object.

No. of Pages : 387 No. of Claims : 27

(12) PATENT APPLICATION PUBLICATION
(19) INDIA
(22) Date of filing of Application :22/09/2016
(21) Application No.201617032297 A
(43) Publication Date : 20/01/2017

(54) Title of the invention : VERIFICATION OF NUMBER OF BATTERY EXCHANGES/PROCEDURE COUNT

(51) International classification :A61B17/00,A61L2/00
(31) Priority Document No :14/226094
(32) Priority Date :26/03/2014
(33) Name of priority country :U.S.A.
(86) International Application No :PCT/US2015/019820
Filing Date :11/03/2015
(87) International Publication No :WO 2015/148115
(61) Patent of Addition to Application Number :NA
Filing Date :NA
(62) Divisional to Application Number :NA
Filing Date :NA

(71)**Name of Applicant :**
1)ETHICON ENDO SURGERY INC.
Address of Applicant :4545 Creek Road Cincinnati Ohio 45242 U.S.A.
(72)**Name of Inventor :**
1)LEIMBACK Richard L.
2)ADAMS Shane R.
3)OVERMYER Mark D.
4)SWENSGARD Brett E.
5)LYTLE Thomas W. IV
6)SHELTON Frederick E. IV
7)HOUSER Kevin L.

(57) Abstract :
The present disclosure provides a power assembly including a housing configured to couple to a surgical instrument. The housing includes at least two electrical contacts. A power source is coupled to the at least two electrical contacts. The power source is configured to provide power to the surgical instrument and a usage cycle circuit is configured to monitor one or more conditions of the power assembly and maintain a usage cycle count.

No. of Pages : 91 No. of Claims : 47

(12) PATENT APPLICATION PUBLICATION
(21) Application No.201617032135 A
(19) INDIA
(22) Date of filing of Application :21/09/2016
(43) Publication Date : 20/01/2017

(54) Title of the invention : HIGH SURFACE AREA LAYERED DOUBLE HYDROXIDES

(51) International classification :C01F7/00
(31) Priority Document No :1405543.8
(32) Priority Date :27/03/2014
(33) Name of priority country :U.K.
(86) International Application No :PCT/EP2015/056444
Filing Date :25/03/2015
(87) International Publication No :WO 2015/144778
(61) Patent of Addition to Application Number :NA
Filing Date :NA
(62) Divisional to Application Number :NA
Filing Date :NA

(71)**Name of Applicant :**
1)SCG CHEMICALS CO. LTD.
Address of Applicant :1 Siam Cement Rd. Bangsue Sub District Bangkok 10800 Thailand
(72)**Name of Inventor :**
1)OHARE Dermot
2)CHEN Chunping
3)WANGRIYA Aunchana
4)WANGARIYAKAWEE Anchalee

(57) Abstract :
Layered double hydroxides having a high surface area (at least 125 m/g) and the formula (I) wherein M and M are different and each is a charged metal cation (and must be present) = 1 or 2; = 3 or 4 0<<0.9 is 0 to 10 = 0 to 10 X is an anion is the charge on the anion and = ()+ 2; AMO solvent is aqueous miscible organic solvent may be prepared by a method which comprises a) precipitating a layered double hydroxide having the formula [MM(OH)](X) HO wherein M M and X are as defined above from a solution containing the cations of the metals M and M and the anion X; b) ageing the layered double hydroxide precipitate obtained in step a) in the original solution; c) collecting then washing the layered double hydroxide precipitate; d) dispersing the wet layered double hydroxide in an AMO solvent so as to produce a slurry of the layered double hydroxide in the solvent; e) maintaining the dispersion obtained in step d); and f) recovering and drying the layered double hydroxide. The high surface area products have low particle size and are particularly suitable for use as catalysts catalyst supports sorbents and coatings.

No. of Pages : 21 No. of Claims : 26

(12) PATENT APPLICATION PUBLICATION
(19) INDIA
(22) Date of filing of Application :21/09/2016
(21) Application No.201617032168 A
(43) Publication Date : 20/01/2017

(54) Title of the invention : METHODS OF MANUFACTURE OF POLYETHERIMIDES

(51) International classification :C08G73/10
(31) Priority Document No :61/979713
(32) Priority Date :15/04/2014
(33) Name of priority country :U.S.A.
(86) International Application No :PCT/US2015/025948
Filing Date :15/04/2015
(87) International Publication No :WO 2015/160933
(61) Patent of Addition to Application Number :NA
Filing Date :NA
(62) Divisional to Application Number :NA
Filing Date :NA

(71)**Name of Applicant :**
1)SABIC GLOBAL TECHNOLOGIES B.V.
Address of Applicant :Plasticslaan 1 4612 PX Bergen op Zoom Netherlands
(72)**Name of Inventor :**
1)CHAULAGAIN Mani Raj

(57) Abstract :
A method of manufacture of a polyetherimide composition includes contacting a substituted phthalic anhydride and an organic diamine in the presence of diphenyl sulfone sulfolane or a combination comprising at least one of the foregoing solvents at a temperature of greater than 130°C to provide a bis(phthalimide) composition comprising diphenyl sulfone sulfolane or a combination comprising at least one of the foregoing solvents and a bis(phthalimide); and polymerizing the bis(phthalimide) and an alkali metal salt of a dihydroxy aromatic compound in the presence of diphenyl sulfone sulfolane or a combination comprising at least one of the foregoing to form a polyetherimide. The method does not require any catalyst either for the imidization or the polymerization.

No. of Pages : 33 No. of Claims : 20

(12) PATENT APPLICATION PUBLICATION
(19) INDIA
(22) Date of filing of Application :21/09/2016
(21) Application No.201617032169 A
(43) Publication Date : 20/01/2017

(54) Title of the invention : CONTROL OF A GROUP OF WIND TURBINES

(51) International classification :F03D7/02,F03D7/04
(31) Priority Document No :NA
(32) Priority Date :NA
(33) Name of priority country :NA
(86) International Application No :PCT/DK2014/050060
Filing Date :13/03/2014
(87) International Publication No :WO 2015/135547
(61) Patent of Addition to Application Number :NA
Filing Date :NA
(62) Divisional to Application Number :NA
Filing Date :NA

(71)**Name of Applicant :**
1)VESTAS WIND SYSTEMS A/S
Address of Applicant :Hedeager 42 8200 Aarhus N Denmark
(72)**Name of Inventor :**
1)SPRUCE Chris
2)HALES Kelvin

(57) Abstract :
Methods and systems for reducing an output power of a group of wind turbines are provided. A measure of life usage by at least one component of each of a plurality of the turbines is determined and is compared to a threshold value for life usage for the component. Power output is preferentially reduced from those turbines having at least one component for which the measure of life usage exceeds the corresponding threshold value.

No. of Pages : 17 No. of Claims : 13

(12) PATENT APPLICATION PUBLICATION
(21) Application No.201617032170 A
(19) INDIA
(22) Date of filing of Application :21/09/2016
(43) Publication Date : 20/01/2017

(54) Title of the invention : PRESS MOLDED ARTICLE AUTOMOTIVE STRUCTURAL MEMBER PROVIDED WITH SAME AND MANUFACTURING METHOD AND MANUFACTURING DEVICE FOR SAID PRESS MOLDED ARTICLE

(51) International classification :B21D19/08,B21D53/88
(31) Priority Document No :2014080448
(32) Priority Date :09/04/2014
(33) Name of priority country :Japan
(86) International Application No :PCT/JP2015/001561
Filing Date :20/03/2015
(87) International Publication No :WO 2015/155943
(61) Patent of Addition to Application Number :NA
Filing Date :NA
(62) Divisional to Application Number :NA
Filing Date :NA

(71)**Name of Applicant :**
1)NIPPON STEEL & SUMITOMO METAL CORPORATION
Address of Applicant :6 1 Marunouchi 2 chome Chiyoda ku Tokyo 1008071 Japan
(72)**Name of Inventor :**
1)ITO Yasuhiro
2)NAKAZAWA Yoshiaki

(57) Abstract :
Provided is a bulkhead (10) which is a press molded article comprising a top plate part (11) side flange parts (14) and corner flange parts (15). The side flange parts (14) respectively extend from each side (12) of the top plate part (11). The corner flange parts (15) respectively extend from each corner part (13) of the top plate part (11). The corner flange parts (15) connect two of the side flange parts (14) to each other. A center part of each corner flange part (15) in the peripheral direction has a section that exhibits a minimum thickness value and the two side parts thereof each have a section that exhibits a maximum thickness value. The ratio between the maximum value and the minimum value is in the range of more than 1.0 and less than or equal to 1.6. This press molded article suppresses wrinkling at the corner flange parts and is suitable as a reinforcing member for an automotive structural member.

No. of Pages : 28 No. of Claims : 12

(12) PATENT APPLICATION PUBLICATION
(19) INDIA
(22) Date of filing of Application :26/09/2016
(21) Application No.201617032753 A
(43) Publication Date : 20/01/2017

(54) Title of the invention : APPARATUS SYSTEM AND METHOD FOR BLASTING USING MAGNETIC COMMUNICATION SIGNAL

(51) International classification :F42D1/05,F42C15/42
(31) Priority Document No :2014901099
(32) Priority Date :27/03/2014
(33) Name of priority country :Australia
(86) International Application No :PCT/AU2015/050121
Filing Date :23/03/2015
(87) International Publication No :WO 2015/143501
(61) Patent of Addition to Application Number :NA
Filing Date :NA
(62) Divisional to Application Number :NA
Filing Date :NA

(71)**Name of Applicant :**
1)ORICA INTERNATIONAL PTE LTD
Address of Applicant :78 Shenton Way #06 15 Tower 2 Singapore 079120 Singapore
(72)**Name of Inventor :**
1)KOTSONIS Steven

(57) Abstract :
An initiator apparatus (IA) for blasting the IA including: a magnetic receiver configured to receive a through the earth (TTE) magnetic communication signal representing a command from a base station; a blasting controller in electrical communication with the magnetic receiver configured to generate response data in response to the command; and an electromagnetic (EM) transmitter system (ETS) in electrical communication with the blasting controller configured to transmit the response data for the base station using a TTE electromagnetic (EM) signal.

No. of Pages : 30 No. of Claims : 26

(12) PATENT APPLICATION PUBLICATION
(21) Application No.201617032772 A
(19) INDIA
(22) Date of filing of Application :26/09/2016
(43) Publication Date : 20/01/2017

(54) Title of the invention : UNDERWATER DRILLING DEVICE AND METHOD FOR OBTAINING AND ANALYSING SOIL SAMPLES OF THE BED OF A BODY OF WATER

(51) International classification	:E21B25/18,E21B49/02,E21B19/14
(31) Priority Document No	:NA
(32) Priority Date	:NA
(33) Name of priority country	:NA
(86) International Application No	:PCT/EP2014/059760
Filing Date	:13/05/2014
(87) International Publication No	:WO 2015/172818
(61) Patent of Addition to Application Number	:NA
Filing Date	:NA
(62) Divisional to Application Number	:NA
Filing Date	:NA

(71)**Name of Applicant :**
1)BAUER MASCHINEN GMBH
Address of Applicant :Bauer Str. 1 86529 Schrobenhausen Germany
2)UNIVERSIT„T BREMEN
(72)**Name of Inventor :**
1)FINKENZELLER Stefan Michael
2)WEIXLER Leonhard
3)FREUDENTHAL Tim

(57) Abstract :
The invention relates to an underwater drilling device and a method for obtaining and analysing soil samples of the bed of a body of water. An underwater drilling device with a base frame is lowered in a body of water and placed on the bed of a body of water. With a drilling drive that is mounted on the base frame and able to move vertically a drill string consisting of at least one tubular drill string element is drilled into the bed of the body of water in a first drilling step wherein a core sample is accommodated in a holder in the tubular drill string element. The holder with the core sample is stored in a storage location of a second storage region on the base frame. Subsequently at least one further drilling step is carried out with a further drill string element. By means of at least one sensor device arranged on a base frame in a surrounding area of the drilling axis at least one physical and/or chemical property of the core sample is determined. The data thus determined is saved in a data processing device together with data relating to the storage location of the core sample in the second storage region.

No. of Pages : 12 No. of Claims : 10

(12) PATENT APPLICATION PUBLICATION
(19) INDIA
(22) Date of filing of Application :26/09/2016
(21) Application No.201617032773 A
(43) Publication Date : 20/01/2017

(54) Title of the invention : TARGETED GENOME EDITING IN ZYGOTES OF DOMESTIC LARGE ANIMALS

(51) International classification :C12N15/00,C12N15/85
(31) Priority Document No :61/970794
(32) Priority Date :26/03/2014
(33) Name of priority country :U.S.A.
(86) International Application No :PCT/US2015/022660
Filing Date :26/03/2015
(87) International Publication No :WO 2015/148761
(61) Patent of Addition to Application Number :NA
Filing Date :NA
(62) Divisional to Application Number :NA
Filing Date :NA

(71)**Name of Applicant :**
1)UNIVERSITY OF MARYLAND COLLEGE PARK
Address of Applicant :Office of Technology Commercialization 2130 Mitchell Building College Park Maryland 20742 U.S.A.
(72)**Name of Inventor :**
1)TELUGU Bhanu Prakash V.L.
2)PARK Ki Eun

(57) Abstract :
A method is provided of targeted genome editing of an animal using site specific homologous integration. A composition comprising a single stranded oligonucleotide or double stranded nucleic acid molecule comprising a nucleic acid molecule of interest and sequences flanking a target locus cleavage site is injected into the zygote of an animal along with a nuclease and a guide nucleic acid molecule that targets the nuclease to a target locus. The composition is injected into the zygote after fertilization and prior to formation of a nucleus. The nucleic acid molecule of interest is recombined into the genome with high efficiency. The process allows for integration of nucleic acid molecules into the genome of animals in which the pronuclei cannot be visually observed during injection.

No. of Pages : 30 No. of Claims : 24

(12) PATENT APPLICATION PUBLICATION
(21) Application No.201617032774 A
(19) INDIA
(22) Date of filing of Application :26/09/2016
(43) Publication Date : 20/01/2017

(54) Title of the invention : HIGH STRENGTH HOT FORMED STEEL SHEET MEMBER

(51) International classification :C22C38/00,C21D1/18,C22C38/32
(31) Priority Document No :2014063941
(32) Priority Date :26/03/2014
(33) Name of priority country :Japan
(86) International Application No :PCT/JP2015/059491
Filing Date :26/03/2015
(87) International Publication No :WO 2015/147216
(61) Patent of Addition to Application Number :NA
Filing Date :NA
(62) Divisional to Application Number :NA
Filing Date :NA

(71)**Name of Applicant :**
1)NIPPON STEEL & SUMITOMO METAL CORPORATION
Address of Applicant :6 1 Marunouchi 2 chome Chiyoda ku Tokyo 1008071 Japan
(72)**Name of Inventor :**
1)HIKIDA Kazuo
2)TABATA Shinichiro
3)KOJIMA Nobusato
4)MORIKI Takahiro

(57) Abstract :
A high strength hot formed steel sheet member exhibiting both a consistent hardness and delayed fracture resistance and is characterized in that: the high strength hot formed steel sheet member has a prescribed chemical composition; the degree of Mn segregation a (=[maximum Mn concentration (mass%) at the sheet center in the thickness direction]/[average Mn concentration (mass%) at a depth of 1/4 of the total thickness of the sheet from the surface]) is less than or equal to 1.6; the steel purity value as defined in JIS G 0555 (2003) is less than or equal to 0.08%; the average grain size for prior grains is less than or equal to 10 μm; and the number density of the residual carbides is less than or equal to 4—10 particles/mm.

No. of Pages : 32 No. of Claims : 4

(12) PATENT APPLICATION PUBLICATION
(19) INDIA
(22) Date of filing of Application :23/09/2016
(21) Application No.201617032484 A
(43) Publication Date : 20/01/2017

(54) Title of the invention : REDUCED GRAPHENE OXIDE BARRIER MATERIALS

(51) International classification :C01B31/04,B82Y20/00,B82Y30/00
(31) Priority Document No :1405642.8
(32) Priority Date :28/03/2014
(33) Name of priority country :U.K.
(86) International Application No :PCT/GB2015/050900
Filing Date :26/03/2015
(87) International Publication No :WO 2015/145155
(61) Patent of Addition to Application Number :NA
Filing Date :NA
(62) Divisional to Application Number :NA
Filing Date :NA

(71)**Name of Applicant :**
1)THE UNIVERSITY OF MANCHESTER
Address of Applicant :Oxford Road Manchester M13 9PL U.K.
(72)**Name of Inventor :**
1)RAVEENDRAN NAIR Rahul
2)SU Yang
3)GEIM Andre

(57) Abstract :
This invention relates to barrier materials comprising reduced graphene oxide methods of making said materials and their uses. The reduced graphene oxide is preferably formed from the reduction of graphene oxide by HI HBr or ascorbic acid.

No. of Pages : 28 No. of Claims : 32

(12) PATENT APPLICATION PUBLICATION
(19) INDIA
(22) Date of filing of Application :23/09/2016
(21) Application No.201617032505 A
(43) Publication Date : 20/01/2017

(54) Title of the invention : ASSEMBLY FOR CONDUCTING ELECTRICAL POWER TO OR FROM ELECTRICALLY ACTIVE CEILING GRID

(51) International classification :H01R25/00
(31) Priority Document No :61/973459
(32) Priority Date :01/04/2014
(33) Name of priority country :U.S.A.
(86) International Application No :PCT/US2015/014200
Filing Date :03/02/2015
(87) International Publication No :WO 2015/152989
(61) Patent of Addition to Application Number :NA
Filing Date :NA
(62) Divisional to Application Number :NA
Filing Date :NA

(71)**Name of Applicant :**
1)NEXTEK POWER SYSTEMS INC.
Address of Applicant :461 Burroughs Street Detroit MI 48202 U.S.A.
(72)**Name of Inventor :**
1)ADELSON Alex M.
2)SAVAGE Paul

(57) Abstract :
An assembly distributes electrical power between an electrically active grid element of a grid framework and an electrical device. The assembly includes a grid connector for making electrical contact with a pair of electrical conductors on the grid element and an adapter mounted on the grid connector. The adapter includes an industry standard interface electrically connected to the grid connector. The interface is adapted to receive a power connector at one end of a power cable whose opposite end is connected to the electrical device.

No. of Pages : 11 No. of Claims : 10

(12) PATENT APPLICATION PUBLICATION
(19) INDIA
(22) Date of filing of Application :23/09/2016
(21) Application No.201617032506 A
(43) Publication Date : 20/01/2017

(54) Title of the invention : ATTACHMENT FOR A HAND HELD APPLIANCE

(51) International classification :A45D20/50,A46B9/02,A45D20/12
(31) Priority Document No :1404986.0
(32) Priority Date :20/03/2014
(33) Name of priority country :U.K.
(86) International Application No :PCT/GB2015/050663
Filing Date :06/03/2015
(87) International Publication No :WO 2015/140508
(61) Patent of Addition to Application Number :NA
Filing Date :NA
(62) Divisional to Application Number :NA
Filing Date :NA

(71)**Name of Applicant :**
1)DYSON TECHNOLOGY LIMITED
Address of Applicant :Tetbury Hill Malmesbury Wiltshire SN16 0RP U.K.
(72)**Name of Inventor :**
1)MACLAINE Alasdair

(57) Abstract :
Disclosed is an attachment for a hand held appliance comprising a body having a first wall; a second wall; and a slot formed along at least part of the length of the attachment wherein the slot is defined on a first side by a surface of the first wall and on a second side by a surface of the second wall. The first wall may be generally tubular. The surface of the second wall may be substantially linear. The second wall may extend out from the first wall. The second wall may be moveable relative to the first wall. The second wall may be rotatable with respect to the first wall. The second wall may be generally triangular. The second wall may have a first indexed position defining a first slot position. The second wall may have a second indexed position defining a second slot position. An indexed position may be defined by a detent mechanism.

No. of Pages : 17 No. of Claims : 33

(12) PATENT APPLICATION PUBLICATION
(19) INDIA
(22) Date of filing of Application :23/09/2016
(21) Application No.201617032513 A
(43) Publication Date : 20/01/2017

(54) Title of the invention : OPTICAL FIBRE SENSOR SYSTEM

(51) International classification :G01D5/353,G01H9/00
(31) Priority Document No :1407011.4
(32) Priority Date :18/04/2014
(33) Name of priority country :U.K.
(86) International Application No :PCT/EP2015/058522
Filing Date :20/04/2015
(87) International Publication No :WO 2015/158926
(61) Patent of Addition to Application Number :NA
Filing Date :NA
(62) Divisional to Application Number :NA
Filing Date :NA

(71)**Name of Applicant :**
1)MIC AG
Address of Applicant :Denisstr. 1b 80335 M¼nchen Germany
2)ZINTERA CORPORATION
(72)**Name of Inventor :**
1)GEIGER Hans

(57) Abstract :
An optical fibre sensor system and a method for determining a location of a disturbance having a signal processor with a plurality of activation cells adapted to react to components of a back scattered signal and label the disturbance.

No. of Pages : 19 No. of Claims : 15

(12) PATENT APPLICATION PUBLICATION
(19) INDIA
(22) Date of filing of Application :23/09/2016
(21) Application No.201617032519 A
(43) Publication Date : 20/01/2017

(54) Title of the invention : AMORPHOUS FORM OF A THIOCOLCHICINE DERIVATIVE

(51) International classification :C07C319/28
(31) Priority Document No :14161945.2
(32) Priority Date :27/03/2014
(33) Name of priority country :EPO
(86) International Application No :PCT/EP2015/056658
Filing Date :26/03/2015
(87) International Publication No :WO 2015/144857
(61) Patent of Addition to Application Number :NA
Filing Date :NA
(62) Divisional to Application Number :NA
Filing Date :NA

(71)**Name of Applicant :**
1)INDENA S.P.A.
Address of Applicant :Viale Ortles 12 I 20139 Milano Italy
(72)**Name of Inventor :**
1)CABRI Walter
2)PETERLONGO Federico
3)CICERI Daniele
4)GAMBINI Andrea

(57) Abstract :
The present invention refers to an amorphous form of a thiocolchicine derivative IDN 5404 to a process for producing it and to pharmaceutical compositions thereof. The amorphous form is characterised by the XRPD pattern DSC profile and/or TG/DTA profile.

No. of Pages : 9 No. of Claims : 8

(12) PATENT APPLICATION PUBLICATION
(21) Application No.201617032539 A
(19) INDIA
(22) Date of filing of Application :23/09/2016
(43) Publication Date : 20/01/2017

(54) Title of the invention : HOT STAMPING STEEL MATERIAL

(51) International classification :C23C2/06,C21D1/18,C21D9/00
(31) Priority Document No :2014073811
(32) Priority Date :31/03/2014
(33) Name of priority country :Japan
(86) International Application No :PCT/JP2015/060185
Filing Date :31/03/2015
(87) International Publication No :WO 2015/152263
(61) Patent of Addition to Application Number :NA
Filing Date :NA
(62) Divisional to Application Number :NA
Filing Date :NA

(71)**Name of Applicant :**
1)NIPPON STEEL & SUMITOMO METAL CORPORATION
Address of Applicant :6 1 Marunouchi 2 chome Chiyoda ku Tokyo 1008071 Japan
(72)**Name of Inventor :**
1)SENGOKU Akihiro
2)TAKEBAYASHI Hiroshi

(57) Abstract :
This hot stamping steel material is provided with: a base material of a steel material that includes a tempered portion having hardness equal to 85% or less of the maximum quench hardness where the maximum quench hardness is defined as the Vickers hardness observed at a position at a depth equivalent to one fourth of the thickness from the surface layer in a material heated to a temperature of A degrees or above held for thirty minutes and then water quenched; and a zinc plating layer formed over the tempered portion of the base material. The zinc plating layer includes a solid solution layer comprising a solid solution phase of Fe and Zn in solid solution in the Fe and a lamellar layer comprising the solid solution phase and a capital gamma phase. In the zinc plating layer the area ratio of the lamellar layer is 30 100% and the area ratio of the solid solution layer is 0 70%.

No. of Pages : 42 No. of Claims : 6

(12) PATENT APPLICATION PUBLICATION
(21) Application No.201617032179 A
(19) INDIA
(22) Date of filing of Application :21/09/2016
(43) Publication Date : 20/01/2017

(54) Title of the invention : SUBSTRATE HAVING A STACK WITH THERMAL PROPERTIES

(51) International classification :C03C17/36
(31) Priority Document No :1453094
(32) Priority Date :08/04/2014
(33) Name of priority country :France
(86) International Application No :PCT/FR2015/050855
Filing Date :02/04/2015
(87) International Publication No :WO 2015/155444
(61) Patent of Addition to Application Number :NA
Filing Date :NA
(62) Divisional to Application Number :NA
Filing Date :NA

(71)**Name of Applicant :**
1)SAINT GOBAIN GLASS FRANCE
Address of Applicant :18 avenue dAlsace F 92400 Courbevoie France
(72)**Name of Inventor :**
1)GEORGES Benoit
2)GOUGOUSSIS Christos

(57) Abstract :
The invention relates to a glass sheet comprising a transparent substrate (10) coated with a stack of thin layers comprising consecutively starting from the substrate an alternating arrangement of two silver based functional metal layers (40 80) and three anti glare coatings (20 60 100) wherein each anti glare coating comprises at least one dielectric layer such that each functional metal layer (40 80) is arranged between two anti glare coatings (20 60 100). The invention is characterized in that: the first functional metal layer (40) is in contact with a blocking undercoat referred to as the first blocking undercoat wherein said first blocking undercoat is an absorbent layer with a thickness greater than 1 nm said first blocking undercoat being located in contact with a dielectric layer made of a non oxidized nitride of one or more elements chosen among silicon and aluminum.

No. of Pages : 16 No. of Claims : 18

(12) PATENT APPLICATION PUBLICATION
(19) INDIA
(22) Date of filing of Application :21/09/2016
(21) Application No.201617032182 A
(43) Publication Date : 20/01/2017

(54) Title of the invention : THERMOPLASTIC RESIN COMPOSITION AND MOLDED ARTICLE OF SAME

(51) International classification :C08L25/08,C08F2/18,C08F220/16
(31) Priority Document No :2014074061
(32) Priority Date :31/03/2014
(33) Name of priority country :Japan
(86) International Application No :PCT/JP2015/058443
Filing Date :20/03/2015
(87) International Publication No :WO 2015/151853
(61) Patent of Addition to Application Number :NA
Filing Date :NA
(62) Divisional to Application Number :NA
Filing Date :NA

(71)**Name of Applicant :**
1)UMG ABS LTD.
Address of Applicant :8 1 Akashi cho Chuo ku Tokyo 1046591 Japan
(72)**Name of Inventor :**
1)MAEDA Kazuhiko
2)MATSUYAMA Hironori

(57) Abstract :
Provided is a thermoplastic resin composition which has excellent thermal discoloration resistance during the retention period of molding and provides a molded article that has excellent fluidity impact resistance heat resistance surface appearance color developability and vibration damping properties. A thermoplastic resin composition which contains 20 70 parts by mass of a graft copolymer (A) which is obtained by graft copolymerizing a vinyl monomer that is selected from the group consisting of unsaturated nitrile monomers aromatic vinyl monomers and (meth)acrylic acid ester monomers in the presence of a rubbery polymer (a) having a volume average particle diameter of 80 600 nm and 30 80 parts by mass of a copolymer (B) which is obtained by copolymerizing a vinyl monomer mixture that contains a vinyl monomer selected from the group consisting of unsaturated nitrile monomers aromatic vinyl monomers and (meth)acrylic acid ester monomers while essentially containing styrene and a methyl styrene as aromatic vinyl monomers with the total of (A) and (B) being 100 parts by mass.

No. of Pages : 55 No. of Claims : 10

(12) PATENT APPLICATION PUBLICATION
(21) Application No.201617032184 A
(19) INDIA
(22) Date of filing of Application :21/09/2016
(43) Publication Date : 20/01/2017

(54) Title of the invention : ELECTROLYSIS SYSTEM

(51) International classification :C02F1/46
(31) Priority Document No :2015028499
(32) Priority Date :17/02/2015
(33) Name of priority country :Japan
(86) International Application No :PCT/JP2015/057942
Filing Date :17/03/2015
(87) International Publication No :WO 2016/132565
(61) Patent of Addition to Application Number :NA
Filing Date :NA
(62) Divisional to Application Number :NA
Filing Date :NA

(71)**Name of Applicant :**
1)MITSUBISHI HEAVY INDUSTRIES ENVIRONMENTAL & CHEMICAL ENGINEERING CO. LTD.
Address of Applicant :4 2 Minatomirai 4 chome Nishi ku Yokohama shi Kanagawa 2200012 Japan
(72)**Name of Inventor :**
1)NASU Yusaku
2)MATSUMURA Tatsuya
3)MIZUTANI Hiroshi
4)NAKAMURA Kenji
5)TAKANAMI Hiroyuki

(57) Abstract :
Provided is an electrolysis system (1) having: an electrolysis device (2) which has an electrolysis vessel (6) wherein a positive electrode and a negative electrode are accommodated for the electrodes and which is for electrolysis of a fluid to be processed; a regulating tank (3) for temporarily retaining the fluid to be processed that is processed by the electrolysis device (2); a recycling line (10) for returning part of a retained fluid (R) that includes microparticles and a deposited substance wherein microparticles have been deposited and that has been retained in the regulating tank (3) to the electrolysis vessel (6); and a prevention means (18) for preventing sedimentation of the deposited substance in the regulating tank (3).

No. of Pages : 18 No. of Claims : 7

(12) PATENT APPLICATION PUBLICATION
(21) Application No.201617032185 A
(19) INDIA
(22) Date of filing of Application :21/09/2016
(43) Publication Date : 20/01/2017

(54) Title of the invention : POWER HEADROOM REPORT METHOD OF DUAL CONNECTIVITY UE IN MOBILE COMMUNICATION SYSTEM

(51) International classification :H04W24/10,H04W72/04
(31) Priority Document No :1020140033658
(32) Priority Date :21/03/2014
(33) Name of priority country :Republic of Korea
(86) International Application No :PCT/KR2015/002846
Filing Date :23/03/2015
(87) International Publication No :WO 2015/142150
(61) Patent of Addition to Application Number :NA
Filing Date :NA
(62) Divisional to Application Number :NA
Filing Date :NA

(71)**Name of Applicant :**
1)SAMSUNG ELECTRONICS CO. LTD.
Address of Applicant :129 Samsung ro Yeongtong gu Suwon si Gyeonggi do 16677 Republic of Korea
(72)**Name of Inventor :**
1)KIM Wooseong
2)KIM Soenghun
3)VAN LIESHOUT Gert Jan
4)JANG Jaehyuk
5)JEONG Kyeongin

(57) Abstract :
A transmit power capability and power headroom report (PHR) method and an apparatus of a User Equipment (UE) operating in an Inter evolved Node B (Inter eNB) carrier aggregation or dual connectivity mode for use in a mobile communication system are provided. The transmit power capability and PHR method includes receiving configuration information for at least one medium access control (MAC) entity for transmitting and receiving a signal; receiving uplink resource allocation information for a first MAC entity included in the at least one MAC entity; and transmitting if change of measurement on one of the at least one MAC entity is equal to or greater than a threshold a power headroom report (PHR) on an uplink resource corresponding to the first MAC entity based on the uplink resource allocation information.

No. of Pages : 30 No. of Claims : 15

(12) PATENT APPLICATION PUBLICATION
(21) Application No.201617032299 A
(19) INDIA
(22) Date of filing of Application :22/09/2016
(43) Publication Date : 20/01/2017

(54) Title of the invention : SOLAR CONCENTRATOR COMPRISING FLAT MIRRORS ORIENTED NORTH SOUTH AND A CYLINDRICAL PARABOLIC SECONDARY MIRROR HAVING A CENTRAL ABSORBER

(51) International classification :F24J2/00,F24J2/06,F24J2/07
(31) Priority Document No :7132014
(32) Priority Date :21/03/2014
(33) Name of priority country :Chile
(86) International Application No :PCT/CL2015/000015
Filing Date :19/03/2015
(87) International Publication No :WO 2015/139152
(61) Patent of Addition to Application Number :NA
Filing Date :NA
(62) Divisional to Application Number :NA
Filing Date :NA

(71)**Name of Applicant :**
1)MENDEL HORWITZ Eduardo David
Address of Applicant :Carlos Silva Vildosola 8561 B La Reina Codigo Postal 7860139 Santiago Chile
(72)**Name of Inventor :**
1)MENDEL HORWITZ Eduardo David

(57) Abstract :
The invention relates to a solar power concentrator (CSP) formed by a series of long flat (Fresnel type) mirrors oriented in a north south direction each mirror having a single east west axis of rotation tracking the height of the sun. Together the mirrors reflect the light throughout the day towards a single cylindrical parabolic mirror which concentrates the solar radiation onto a small area close to the focal line of the parabola on which an absorber is located that heats fluids and/or generates electricity.

No. of Pages : 4 No. of Claims : 4

(12) PATENT APPLICATION PUBLICATION
(19) INDIA
(22) Date of filing of Application :22/09/2016
(21) Application No.201617032300 A
(43) Publication Date : 20/01/2017

(54) Title of the invention : A FRAMELESS TEMPORARY OR EMERGENCY SHELTER

(51) International classification :E04B1/343,E04B1/32,E04B1/38
(31) Priority Document No :622789
(32) Priority Date :21/03/2014
(33) Name of priority country :New Zealand
(86) International Application No :PCT/NZ2015/000017
Filing Date :20/03/2015
(87) International Publication No:WO 2015/142189
(61) Patent of Addition to Application Number :NA
Filing Date :NA
(62) Divisional to Application Number :NA
Filing Date :NA

(71)**Name of Applicant :**
1)BREE Charles Caulder
Address of Applicant :1 Koheroa Road Mercer 2474 New Zealand
(72)**Name of Inventor :**
1)BREE Charles Caulder

(57) Abstract :
A foldable frameless emergency shelter is constructed from a radial array of bendable yet rigid panels such as of a foamed plastic. Panels have adjoining edges with matching convexly curved profiles. The edges are always held to each other with a flexible fastener such as an adhesive tape. During erection a flat panel inherently deforms into a curved cylindrical tapered shape enclosing a space. A door and an optional floor are provided. The shelter has a rigid conical cap including holes for guy ropes a door and an optional window.

No. of Pages : 18 No. of Claims : 15

(12) PATENT APPLICATION PUBLICATION
(19) INDIA
(22) Date of filing of Application :22/09/2016
(21) Application No.201617032303 A
(43) Publication Date : 20/01/2017

(54) Title of the invention : SURGICAL INSTRUMENT COMPRISING A SENSOR SYSTEM

(51) International classification :A61B17/072,A61B18/12,A61B17/29
(31) Priority Document No :14/226142
(32) Priority Date :26/03/2014
(33) Name of priority country :U.S.A.
(86) International Application No :PCT/US2015/019817
Filing Date :11/03/2015
(87) International Publication No :WO 2015/148112
(61) Patent of Addition to Application Number :NA
Filing Date :NA
(62) Divisional to Application Number :NA
Filing Date :NA

(71)**Name of Applicant :**
1)ETHICON ENDO SURGERY INC.
Address of Applicant :4545 Creek Road Cincinnati Ohio 45242 U.S.A.
(72)**Name of Inventor :**
1)LEIMBACK Richard L.
2)ADAMS Shane R.
3)OVERMYER Mark D.
4)SHELTON Frederick E. IV

(57) Abstract :
A surgical instrument can comprise a handle a shaft assembly a first sensor configured to detect a condition of the surgical instrument and a second sensor configured to detect the condition of the surgical instrument. The surgical instrument can further comprise a processor wherein the first sensor and the second sensor are in signal communication with the processor wherein the processor receives a first signal from the first sensor wherein the processor receives a second signal from the second sensor wherein the processor is configured to utilize the first signal and the second signal to determine the condition and wherein the processor is configured to communicate instructions to the surgical instrument in view of the condition.

No. of Pages : 140 No. of Claims : 19

(12) PATENT APPLICATION PUBLICATION
(21) Application No.201617032319 A
(19) INDIA
(22) Date of filing of Application :22/09/2016
(43) Publication Date : 20/01/2017

(54) Title of the invention : OXYGEN ABSORBING MULTILAYER CONTAINER AND METHOD FOR MANUFACTURING SAME

(51) International classification :B32B27/00,B32B27/18,B32B27/36
(31) Priority Document No :2014062918
(32) Priority Date :26/03/2014
(33) Name of priority country :Japan
(86) International Application No :PCT/JP2015/059050
Filing Date :25/03/2015
(87) International Publication No :WO 2015/147031
(61) Patent of Addition to Application Number :NA
Filing Date :NA
(62) Divisional to Application Number :NA
Filing Date :NA

(71)**Name of Applicant :**
1)MITSUBISHI GAS CHEMICAL COMPANY INC.
Address of Applicant :5 2 Marunouchi 2 chome Chiyoda ku Tokyo 1008324 Japan
(72)**Name of Inventor :**
1)ARAKAWA Shota
2)KASHIBA Takashi

(57) Abstract :
An oxygen absorbing multilayer container having in the stated order at least three layers: a first resin layer containing a thermoplastic resin; an oxygen absorbing layer containing a polyester compound (a) that contains a constituent unit having a tetralin ring and an oxygen absorbing resin composition that contains a transition metal catalyst; and a second resin layer containing the same type of thermoplastic resin contained in the first resin layer. The oxygen absorbing multilayer container contains a cycloolefin polymer having a glass transition temperature of 50 110°C as the thermoplastic resin.

No. of Pages : 45 No. of Claims : 8

(12) PATENT APPLICATION PUBLICATION
(21) Application No.201617032322 A
(19) INDIA
(22) Date of filing of Application :22/09/2016
(43) Publication Date : 20/01/2017

(54) Title of the invention : DIFFERENTIAL PRESSURE SENSOR

(51) International classification :G01L9/00
(31) Priority Document No :14/194011
(32) Priority Date :28/02/2014
(33) Name of priority country :U.S.A.
(86) International Application No :PCT/US2015/018084
Filing Date :27/02/2015
(87) International Publication No :WO 2015/131090
(61) Patent of Addition to Application Number :NA
Filing Date :NA
(62) Divisional to Application Number :NA
Filing Date :NA

(71)**Name of Applicant :**
1)MEASUREMENT SPECIALTIES INC.
Address of Applicant :1000 Lucas Way Hampton Virginia 23666 U.S.A.
(72)**Name of Inventor :**
1)WAGNER David E.
2)KACHENKO Natasha V.
3)WONG Vincent M.

(57) Abstract :
A differential pressure sensor includes a pressure sensing die including a semiconductor die having a thinned portion forming a diaphragm. The diaphragm includes piezo resistive elements that exhibit varying resistance based on force exerted on the diaphragm. A first support structure is bonded to a first surface of the semiconductor die having an aperture defined through the support structure such that a first surface of the diaphragm is exposed through the aperture. A second support structure is similarly bonded to the opposite side of the semiconductor die. Electrical components in electrical communication with the piezo resistive elements are arranged outside the region defined by the bond between the first and second support structures and the semiconductor die. An oil filled volume may be defined between the semiconductor die and a harsh medium which transmits a fluid pressure to the die without the harsh medium contacting the die.

No. of Pages : 43 No. of Claims : 11

(12) PATENT APPLICATION PUBLICATION
(21) Application No.201617032540 A
(19) INDIA
(22) Date of filing of Application :23/09/2016
(43) Publication Date : 20/01/2017

(54) Title of the invention : HOT STAMPED STEEL MATERIAL

(51) International classification :C21D1/18,B21D22/20,C21D9/00
(31) Priority Document No :2014073814
(32) Priority Date :31/03/2014
(33) Name of priority country :Japan
(86) International Application No :PCT/JP2015/060235
Filing Date :31/03/2015
(87) International Publication No :WO 2015/152284
(61) Patent of Addition to Application Number :NA
Filing Date :NA
(62) Divisional to Application Number :NA
Filing Date :NA

(71)**Name of Applicant :**
1)NIPPON STEEL & SUMITOMO METAL CORPORATION
Address of Applicant :6 1 Marunouchi 2 chome Chiyoda ku Tokyo 1008071 Japan
(72)**Name of Inventor :**
1)SENGOKU Akihiro
2)TAKEBAYASHI Hiroshi

(57) Abstract :
The objective of the present invention is to provide a hot stamped steel material that has greater shock absorption than conventional hot stamped steel materials having the same chemical composition has excellent corrosion resistance and has a galvanized layer. This hot stamped steel material is provided with: a parent material which is a steel material that includes a tempered portion having a hardness that is at most 85% of a maximum quenching hardness when the maximum quenching hardness is defined as the Vickers hardness at a position that is at a depth of 1/4 of the sheet thickness from the surface when water quenching is carried out after heating to a temperature that is equal to or greater than the Ac3 point and holding at said temperature for 30 minutes; and a galvanized layer that is formed on the tempered portion of the parent material. The galvanized layer includes a solid solution layer comprising a solid solution phase including Fe and Zn dissolved in the Fe and includes a lamellar layer comprising the solid solution phase and a capital gamma phase wherein the area ratio of the lamellar layer in the galvanized layer is at most 20%.

No. of Pages : 50 No. of Claims : 7

(12) PATENT APPLICATION PUBLICATION
(21) Application No.201617032541 A
(19) INDIA
(22) Date of filing of Application :23/09/2016
(43) Publication Date : 20/01/2017

(54) Title of the invention : INFORMATION PROCESSING DEVICE INFORMATION PROCESSING METHOD AND PROGRAM

(51) International classification :G06F13/00
(31) Priority Document No :2014071700
(32) Priority Date :31/03/2014
(33) Name of priority country :Japan
(86) International Application No :PCT/JP2015/052406
Filing Date :28/01/2015
(87) International Publication No :WO 2015/151569
(61) Patent of Addition to Application Number :NA
Filing Date :NA
(62) Divisional to Application Number :NA
Filing Date :NA

(71)**Name of Applicant :**
1)FELICA NETWORKS INC.
Address of Applicant :1 11 1 Osaki Shinagawa ku Tokyo 1410032 Japan
(72)**Name of Inventor :**
1)WATANABE Keitarou
2)HAMADA Yu

(57) Abstract :
To propose an information processing device an information processing method and a program that make it possible to control accesses from each of a plurality of access origins in an exclusive manner even in a communication environment based on a standard that assumes one to one communication. [Solution] An information processing device provided with the following: an acquisition unit that acquires identifying information at least part of which contains randomized information from an external device; and a control unit whereby of communication data transmitted by the external device only communication data associated with the acquired identifying information is processed in an exclusive manner.

No. of Pages : 62 No. of Claims : 25

(12) PATENT APPLICATION PUBLICATION
(19) INDIA
(22) Date of filing of Application :23/09/2016
(21) Application No.201617032542 A
(43) Publication Date : 20/01/2017

(54) Title of the invention : GLASS ARTICLE

(51) International classification :C03C3/085,C03C3/087,C03C3/091
(31) Priority Document No :61/970972
(32) Priority Date :27/03/2014
(33) Name of priority country :U.S.A.
(86) International Application No :PCT/US2015/022413
Filing Date :25/03/2015
(87) International Publication No :WO 2015/148618
(61) Patent of Addition to Application Number :NA
Filing Date :NA
(62) Divisional to Application Number :NA
Filing Date :NA

(71)**Name of Applicant :**
1)CORNING INCORPORATED
Address of Applicant :1 Riverfront Plaza Corning NY 14831 U.S.A.
(72)**Name of Inventor :**
1)CLEARY Thomas Michael
2)HU Guangli
3)MAURO John Christopher
4)NONI JR. Douglas Miles
5)VENKATARAMAN Natesan

(57) Abstract :
A glass article includes a glass core layer and a glass cladding layer adjacent to the core layer. A coefficient of thermal expansion (CTE) of the core layer is greater than a CTE of the cladding layer. The core layer has a tensile stress and the cladding layer has a compressive stress. A retained strength of the glass article is a strength determined after abrasion of an outer surface of the glass article with 1 mL of 90 grit SiC particles for 5 seconds at an abrasion pressure and a ratio of the retained strength at an abrasion pressure of 25 psi to the retained strength at an abrasion pressure of 5 psi is at least about 0.3.

No. of Pages : 31 No. of Claims : 34

(12) PATENT APPLICATION PUBLICATION
(21) Application No.201617032543 A
(19) INDIA
(22) Date of filing of Application :23/09/2016
(43) Publication Date : 20/01/2017

(54) Title of the invention : METHOD FOR PRODUCING A COLD ROLLED FLAT STEEL PRODUCT WITH HIGH YIELD STRENGTH AND FLAT COLD ROLLED STEEL PRODUCT

(51) International classification :C21D8/02,C22C38/02,C22C38/04
(31) Priority Document No :10 2014 105 396.6
(32) Priority Date :15/04/2014
(33) Name of priority country :Germany
(86) International Application No :PCT/EP2015/058101
Filing Date :14/04/2015
(87) International Publication No :WO 2015/158731
(61) Patent of Addition to Application Number :NA
Filing Date :NA
(62) Divisional to Application Number :NA
Filing Date :NA

(71)**Name of Applicant :**
1)JFE STEEL CORPORATION
Address of Applicant :2-3, Uchisaiwai-cho 2-chome Chiyoda-ku Tokyo 1000011, Japan Japan
(72)**Name of Inventor :**
1)HAMMER Brigitte
2)HISKER Frank
3)HELLER Thomas
4)DZAFIC Almir
5)THIESSEN Richard G.
6)KANEKO Shinjiro
7)SHIIMORI Fusae

(57) Abstract :
The invention provides a method for producing a cold rolled steel strip with a yield ratio Re/Rm of at least 0.7 the cold rolled steel product consisting of a steel comprising iron unavoidable production impurities and (in wt. %) C: 0.05 0.20% Si: 0.25 1.00% Mn: 1.0 3.0% Al : 0.02 1.5% Cr: 0.1 1.5% N: less than 0.02% P: less than 0.03% S: less than 0.05% and optionally one or more elements from the group Ti Mo Nb V B subject to Ti: being up to 0.15% Mo: less than 2% Nb: less than 0.1% V: less than 0.12% and B: 0.0005 0.003%. According to the invention the cold rolled flat steel product provided undergoes additional heat treatment during which it is annealed for an annealing time of 4.5 24 hours at an annealing temperature of up to 150 400°C. It has surprisingly transpired that as a result of such long time annealing carried out at comparatively low temperatures a dramatic increase in the yield strength Re and an improvement in the hole expansion occurs. The invention also provides a cold rolled flat steel product consisting of the steel mentioned before and having a structure comprising at least two phases which (in vol. %) contains at least 10% tempered martensite less than 10 % bainite less than 10 % residual austenite and as the remainder ferrite the steel having a yield ratio Re/Rm of at least 0.7 a tensile strength R of more than 750 MPa and a hole expansion LA of at least 18%.

No. of Pages : 17 No. of Claims : 10

(12) PATENT APPLICATION PUBLICATION
(21) Application No.201617032775 A
(19) INDIA
(22) Date of filing of Application :26/09/2016
(43) Publication Date : 20/01/2017

(54) Title of the invention : METHOD FOR LOWERING A SUBSEA STRUCTURE HAVING A SUBSTANTIALLY FLAT SUPPORT BASE INTO THE WATER THROUGH THE SPLASH ZONE

(51) International classification :B63B27/10
(31) Priority Document No :2012527
(32) Priority Date :28/03/2014
(33) Name of priority country :Netherlands
(86) International Application No :PCT/NL2015/050201
Filing Date :30/03/2015
(87) International Publication No :WO 2015/147647
(61) Patent of Addition to Application Number :NA
Filing Date :NA
(62) Divisional to Application Number :NA
Filing Date :NA

(71)**Name of Applicant :**
1)BLUEMARINE OFFSHORE YARD SERVICE B.V.
Address of Applicant :Ophemertstraat 85 NL 3089 JD Rotterdam Netherlands
(72)**Name of Inventor :**
1)MASTEBROEK Klaas Wout

(57) Abstract :
The present invention relates to a method for lowering a subsea structure to be installed on the seabed into the water through the splash zone said subsea structure comprising subsea equipment arranged on a substantially flat support base for preventing the subsea equipment to sink into the seabed. The method according to the invention comprises: lifting the subsea structure into the air in a horizontal position in which the flat support base extends substantially parallel to the horizontal plane; tilting the subsea structure while suspended in the air from the horizontal position into a tilted position in which the flat support base is angled with respect to the horizontal plane; lowering the subsea structure into the water through the splash zone in the tilted position; and tilting the subsea structure while suspended in the water below the splash zone back into the horizontal position.

No. of Pages : 10 No. of Claims : 16

(12) PATENT APPLICATION PUBLICATION
(21) Application No.201617032776 A
(19) INDIA
(22) Date of filing of Application :26/09/2016
(43) Publication Date : 20/01/2017

(54) Title of the invention : PHOTOLUMINESCENT COATING MATERIAL COMPOSITION

(51) International classification	:C09D201/06,B05D1/36,B05D5/06
(31) Priority Document No	:2014081250
(32) Priority Date	:10/04/2014
(33) Name of priority country	:Japan
(86) International Application No	:PCT/JP2015/054307
Filing Date	:17/02/2015
(87) International Publication No	:WO 2015/156032
(61) Patent of Addition to Application Number	:NA
Filing Date	:NA
(62) Divisional to Application Number	:NA
Filing Date	:NA

(71)**Name of Applicant :**
1)KANSAI PAINT CO. LTD.
Address of Applicant :33 1 Kanzaki cho Amagasaki shi Hyogo 6618555 Japan
(72)**Name of Inventor :**
1)OCHI Toshiro
2)NAKAMIZU Masato
3)NIIMI Akinari

(57) Abstract :
This photoluminescent coating material composition is characterized by containing in terms of solid content ratio based on the total of the resin solid contents of components (A) (B) and (C) said total being taken as 100% by mass 10 90% by mass of a hydroxyl group containing resin (A) 5 50% by mass of a curing agent (B) 1 40% by mass of a nonaqueous dispersion resin (C) 1 20% by mass of a basic pigment (D) and 1 30% by mass of a photoluminescent pigment (E). This photoluminescent coating material composition is also characterized in that: the nonaqueous dispersion resin (C) has a structure that has a core portion and a shell portion; and the shell portion of the nonaqueous dispersion resin (C) contains 0.05 5.0% by mass of a sulfonic acid group containing polymerizable unsaturated monomer based on the total amount of polymerizable unsaturated monomer components that constitute the nonaqueous dispersion resin (C).

No. of Pages : 62 No. of Claims : 12

(12) PATENT APPLICATION PUBLICATION
(19) INDIA
(22) Date of filing of Application :26/09/2016
(21) Application No.201617032777 A
(43) Publication Date : 20/01/2017

(54) Title of the invention : CONTAINER INDICATOR DEVICE AND NEBULIZER

(51) International classification :A61M15/00,A61M11/00,G06M1/02
(31) Priority Document No :14001603.1
(32) Priority Date :07/05/2014
(33) Name of priority country :EPO
(86) International Application No :PCT/EP2015/000901
Filing Date :04/05/2015
(87) International Publication No :WO 2015/169429
(61) Patent of Addition to Application Number :NA
Filing Date :NA
(62) Divisional to Application Number :NA
Filing Date :NA

(71)**Name of Applicant :**
1)BOEHRINGER INGELHEIM INTERNATIONAL GMBH
Address of Applicant :Binger Strae 173 55216 Ingelheim am Rhein Germany
(72)**Name of Inventor :**
1)EICHER Joachim
2)WUTTKE Gilbert
3)VON SCHUCKMANN Alfred

(57) Abstract :
A nebulizer (1) for a fluid (2) as well as a container (3) and an indicator device (25) for such a nebulizer are proposed. The indicator device may be fixedly mounted from the bottom of the container and comprises a piercing part (48) for opening an aeration of the container. The indicator device and its piercing part are preferably actuated by axial movement of the indicator device and container within the nebulizer.

No. of Pages : 50 No. of Claims : 32

(12) PATENT APPLICATION PUBLICATION
(21) Application No.201617032778 A
(19) INDIA
(22) Date of filing of Application :26/09/2016
(43) Publication Date : 20/01/2017

(54) Title of the invention : MARTENSITIC FERRITIC STAINLESS STEEL MANUFACTURED PRODUCT AND PROCESSES USING THE SAME

(51) International classification :C22C38/00,C22C38/42,C22C38/44
(31) Priority Document No :BR1020140050159
(32) Priority Date :28/02/2014
(33) Name of priority country :Brazil
(86) International Application No :PCT/BR2015/050016
Filing Date :25/02/2015
(87) International Publication No :WO 2015/127523
(61) Patent of Addition to Application Number :NA
Filing Date :NA
(62) Divisional to Application Number :NA
Filing Date :NA

(71)**Name of Applicant :**
1)VALLOUREC TUBOS DO BRASIL S.A.
Address of Applicant :Av. Olinto Meireles 65 Barreiro 30640 010 Belo Horizonte MG Brazil
(72)**Name of Inventor :**
1)DE CARVALHO Ricardo Nolasco
2)FERREIRA Marcelo Almeida Cunha
3)DE LIMA Marlia Mendon§a
4)MESQUITA Rafael Agnelli
5)FARINA Alexandre Bellegard
6)LIBERTO Rodrigo Cesar Nascimento

(57) Abstract :
The present invention relates to a martensitic ferritic stainless steel with high corrosion resistance that comprises the following chemical composition: C: from 5 0.005 to 0.030%; Si: from 0.10 to 0.40%; Mn from 0.20 to 0.80%; P: 0.020% max; S: 0.005% max; Cr: from 13 to 15%; Ni: from 4.0 to 6.0%; Mo: from 2.0 to 4.5%; V: from 0.01 to 0.10%; Nb: from 0.01 to 0.50%; N: from 0.001 to 0.070%; Al: from 0.001 to 0.060%; Ti: from 0.001 to 0.050%; Cu: from 0.01 to 1.50%; O: 0.005% max (all in weight percent) wherein the balance is performed by Fe and unavoidable impurities 10 from the industrial possessing in acceptable levels. Additionally the martensitic ferritic stainless steel of the present invention has the localized corrosion parameter (LCP) between 3.2 and 6.2 as defined by equation below; LCP = 0.500 %Cr + 1.287 · %Mo + 1.308·%N 5.984 The present invention also relates to a manufactured product comprising the martensitic ferritic stainless steel of the invention; to a process for 15 production of forged or rolled parts or bars; and to a process for production of seamless tube from this martensitic ferritic stainless steel of the present invention wherein the processes of the invention have a heating temperature in determined step following the equation below: 16.9 % 49.9 % > 535

No. of Pages : 22 No. of Claims : 23

(12) PATENT APPLICATION PUBLICATION
(19) INDIA
(22) Date of filing of Application :22/09/2016
(21) Application No.201617032323 A
(43) Publication Date : 20/01/2017

(54) Title of the invention : DIFFERENTIAL PRESSURE SENSING DIE

(51) International classification :G01L9/00
(31) Priority Document No :14/193992
(32) Priority Date :28/02/2014
(33) Name of priority country :U.S.A.
(86) International Application No :PCT/US2015/018078
Filing Date :27/02/2015
(87) International Publication No :WO 2015/131085
(61) Patent of Addition to Application Number :NA
Filing Date :NA
(62) Divisional to Application Number :NA
Filing Date :NA

(71)**Name of Applicant :**
1)MEASUREMENT SPECIALTIES INC.
Address of Applicant :1000 Lucas Way Hampton Virginia 23666 U.S.A.
(72)**Name of Inventor :**
1)WAGNER David E.
2)HOFFMAN James H.
3)JENNI Kaspar L.

(57) Abstract :
A differential pressure sensor includes a pressure sensing die comprising a semiconductor die having a thinned portion forming a diaphragm. The diaphragm includes piezo resistive elements that exhibit varying resistance based on force exerted on the diaphragm. A first support structure is bonded to a first surface of the semiconductor die having an aperture defined through the support structure such that a first surface of the diaphragm is exposed through the aperture. A second support structure is bonded to the opposite side of the semiconductor die having an aperture aligned with the opposing side of the diaphragm. Electrical components in electrical communication with the piezo resistive elements are arranged outside the region defined by the bond between the first and second support structures and the semiconductor die. An oil filled volume may be defined between the semiconductor die and a harsh medium which transmits a fluid pressure to the die without the harsh medium contacting the die.

No. of Pages : 43 No. of Claims : 11

(12) PATENT APPLICATION PUBLICATION
(21) Application No.201617032326 A
(19) INDIA
(22) Date of filing of Application :22/09/2016
(43) Publication Date : 20/01/2017

(54) Title of the invention : COMPOSITE CATALYST AND PREPARATION METHOD THEREFOR

(51) International classification :B01J25/00,B01J25/02
(31) Priority Document No :201410083872.9
(32) Priority Date :07/03/2014
(33) Name of priority country :China
(86) International Application No :PCT/CN2015/073783
Filing Date :06/03/2015
(87) International Publication No :WO 2015/131852
(61) Patent of Addition to Application Number :NA
Filing Date :NA
(62) Divisional to Application Number :NA
Filing Date :NA

(71)**Name of Applicant :**
1)CHINA PETROLEUM & CHEMICAL CORPORATION
Address of Applicant :22a Chaoyangmenbei Street Chaoyang District Beijing 100728 China
2)BEIJING RESEARCH INSTITUTE OF CHEMICAL INDUSTRY CHINA PETROLEUM & CHEMICAL CORPORATION
(72)**Name of Inventor :**
1)DAI Wei
2)LU Shuliang
3)JIANG Haibin
4)WANG Guoqing
5)ZHANG Xiaohong
6)PENG Hui
7)QIAO Jinliang

(57) Abstract :
Disclosed is a composite catalyst comprising carbon in a continuous phase and Raney alloy particles in a dispersed phase. The Raney alloy particles are dispersed evenly or unevenly in the carbon in a continuous phase and the carbon in a continuous phase is obtained by carbonizing at least one carbonizable organic substance. The catalyst has good particle strength high catalytic activity and good selectivity.

No. of Pages : 20 No. of Claims : 21

(12) PATENT APPLICATION PUBLICATION
(19) INDIA
(22) Date of filing of Application :22/09/2016
(21) Application No.201617032337 A
(43) Publication Date : 20/01/2017

(54) Title of the invention : NOVEL 6 7 DIHYDRO 3*H* OXAZOLO[3 4 A]PYRAZINE 5 8 DIONE DERIVATIVE COMPOUNDS

(51) International classification	:C07D413/14,A61K31/4985,A61P15/10
(31) Priority Document No	:61/943825
(32) Priority Date	:24/02/2014
(33) Name of priority country	:U.S.A.
(86) International Application No	:PCT/BR2015/000023
Filing Date	:24/02/2015
(87) International Publication No	:WO 2015/123748
(61) Patent of Addition to Application Number	:NA
Filing Date	:NA
(62) Divisional to Application Number	:NA
Filing Date	:NA

(71)**Name of Applicant :**
1)BIOLAB SANUS FARMACEUTICA LTDA
Address of Applicant :Av. Paulo Ayres 280 Vila Iasi Tabo£o da Serra 04071 900 S£o Paulo SP Brazil
(72)**Name of Inventor :**
1)SACURAI Srgio Luiz
2)TOUZARIM Carlos Eduardo da Costa
3)TOLEDO Fabiano Travanca
4)SOUSA Bruno Artur de

(57) Abstract :
The present invention relates to novel 6 7 dihydro 3 oxazolo[3 4 a]pyrazine 5 8 dione derivatives or to a mixture thereof. The present invention also relates to pharmaceutical compositions comprising an effective quantity of one of said novel compounds of the invention as well as to the use of said compounds and/or derivatives as inhibitors of phosphodiesterase enzymes and to the use of the compounds and/or derivatives for the treatment of erectile dysfunction disorders and/or conditions which can be treated with tissue relaxants and disorders which can be treated with phosphodiesterase inhibitors more specifically with PDE 5 inhibitors. Another aim of the present invention is to provide a medicinal drug comprising a therapeutically effective quantity of one of the novel compounds and a method of treatment using novel compounds.

No. of Pages : 38 No. of Claims : 18

(12) PATENT APPLICATION PUBLICATION
(21) Application No.201617032339 A
(19) INDIA
(22) Date of filing of Application :22/09/2016
(43) Publication Date : 20/01/2017

(54) Title of the invention : HOUSING MANUFACTURING METHOD THEREOF AND ELECTRONIC DEVICE INCLUDING THE HOUSING

(51) International classification :H04M1/02
(31) Priority Document No :1020140104434
(32) Priority Date :12/08/2014
(33) Name of priority country :Republic of Korea
(86) International Application No :PCT/KR2015/008368
Filing Date :11/08/2015
(87) International Publication No :WO 2016/024780
(61) Patent of Addition to Application Number :NA
Filing Date :NA
(62) Divisional to Application Number :NA
Filing Date :NA

(71)**Name of Applicant :**
1)SAMSUNG ELECTRONICS CO. LTD.
Address of Applicant :129 Samsung ro Yeongtong gu Suwon si Gyeonggi do 16677 Republic of Korea
(72)**Name of Inventor :**
1)LEE Yong Seok
2)MOCK Jin A
3)YANG Soon Woong
4)LEE Seung Hoon
5)JUNG Min Su
6)CHUN Hong Moon
7)SEO Kun Chan

(57) Abstract :
A mobile phone is provided which includes a metal bezel having a left bezel portion and a right bezel portion and covering at least one part of an outer circumferential edge of a main body of the mobile phone wherein upper and lower corner bezel portions of the left and right bezel portion are formed to be thicker outwardly in comparison with a middle portion of the left and right bezel portions.

No. of Pages : 25 No. of Claims : 15

(12) PATENT APPLICATION PUBLICATION
(21) Application No.201617032349 A
(19) INDIA
(22) Date of filing of Application :22/09/2016
(43) Publication Date : 20/01/2017

(54) Title of the invention : METHOD AND SYSTEM FOR IMPROVING ENERGY CAPTURE EFFICIENCY FROM AN ENERGY CAPTURE DEVICE

(51) International classification :F03D7/02,F03D11/00,F03B13/26
(31) Priority Document No :1403169.4
(32) Priority Date :24/02/2014
(33) Name of priority country :U.K.
(86) International Application No :PCT/GB2015/050501
Filing Date :20/02/2015
(87) International Publication No :WO 2015/124946
(61) Patent of Addition to Application Number :NA
Filing Date :NA
(62) Divisional to Application Number :NA
Filing Date :NA

(71)**Name of Applicant :**
1)SGURRENERGY LIMITED
Address of Applicant :225 Bath Street Glasgow G2 4GZ U.K.
(72)**Name of Inventor :**
1)IRVINE Ian

(57) Abstract :
A method and system for improving the efficiency of energy capture from an energy capture device by analysis of the downstream fluid wake created by the energy capture device. In an illustrated embodiment the system (10) comprises a sensing arrangement (32) configured to acquire air flow data from a downstream wake (34) produced by rotating blades (20) of a wind turbine (12) the sensing arrangement (32) comprising a Lidar unit (35) having an optical source (36) and a receiver (38). In use the sensing arrangement (32) acquires data relating to the air flow velocity in the wake (34) which data is then processed to determine the relative angle of the wind turbine (12) and the average direction (D) of the incident resource (W).

No. of Pages : 13 No. of Claims : 40

(12) PATENT APPLICATION PUBLICATION
(19) INDIA
(22) Date of filing of Application :23/09/2016
(21) Application No.201617032544 A
(43) Publication Date : 20/01/2017

(54) Title of the invention : TACTILE SENSE PRESENTATION DEVICE SIGNAL GENERATING DEVICE TACTILE SENSE PRESENTATION SYSTEM AND TACTILE SENSE PRESENTATION METHOD

(51) International classification :G06F3/01,G06F3/041,G06F3/0488
(31) Priority Document No :2014074474
(32) Priority Date :31/03/2014
(33) Name of priority country :Japan
(86) International Application No :PCT/JP2015/000607
Filing Date :10/02/2015
(87) International Publication No :WO 2015/151380
(61) Patent of Addition to Application Number :NA
Filing Date :NA
(62) Divisional to Application Number :NA
Filing Date :NA

(71)**Name of Applicant :**
1)SONY CORPORATION
Address of Applicant :1 7 1 Konan Minato ku Tokyo 1080075 Japan
(72)**Name of Inventor :**
1)ONO Akira
2)YOSHIDA Hiroshi
3)TAKENAKA Mikio

(57) Abstract :
This tactile sense presentation device is provided with a movable body an actuator section and a signal generating section. The actuator section is connected to the movable body. The signal generating section is configured so as to supply the actuator section with drive signals which make the actuator section generate vibration that includes in one cycle a plurality of different amplitudes and/or a plurality of different frequencies.

No. of Pages : 62 No. of Claims : 26

(12) PATENT APPLICATION PUBLICATION
(19) INDIA
(22) Date of filing of Application :23/09/2016
(21) Application No.201617032545 A
(43) Publication Date : 20/01/2017

(54) Title of the invention : IMMUNOMODULATORY THERAPY FOR TYPE 1 DIABETES MELLITUS AUTOIMMUNITY

(51) International classification :A61K38/28,A61K38/22,C07K14/62
(31) Priority Document No :1403258.5
(32) Priority Date :25/02/2014
(33) Name of priority country :U.K.
(86) International Application No :PCT/GB2015/050493
Filing Date :20/02/2015
(87) International Publication No :WO 2015/128617
(61) Patent of Addition to Application Number :NA
Filing Date :NA
(62) Divisional to Application Number :NA
Filing Date :NA

(71)**Name of Applicant :**
1)TIHAMER Orban
Address of Applicant :64 Aspinwall Apt # 1 Brookline Massachusetts 02446 U.S.A.
2)HEYAM Jalahej
3)DAUBENEY Nara
4)DAUBENEY Piers
(72)**Name of Inventor :**
1)TIHAMER Orban
2)HEYAM Jalahej
3)DAUBENEY Nara
4)DAUBENEY Piers

(57) Abstract :
A composition for treating type 1 diabetes mellitus autoimmunity can include a therapeutically effective amount of two or more overlapping fragments of preproinsulin and a pharmaceutically acceptable carrier wherein at least one of the polypeptide fragments is antigenic.

No. of Pages : 24 No. of Claims : 68

(12) PATENT APPLICATION PUBLICATION
(19) INDIA
(22) Date of filing of Application :23/09/2016
(21) Application No.201617032546 A
(43) Publication Date : 20/01/2017

(54) Title of the invention : POWER CONVERSION DEVICE

(51) International classification :H02M7/48,H02P21/00,H02P27/04
(31) Priority Document No :2014065520
(32) Priority Date :27/03/2014
(33) Name of priority country :Japan
(86) International Application No :PCT/JP2015/001800
Filing Date :27/03/2015
(87) International Publication No :WO 2015/146197
(61) Patent of Addition to Application Number :NA
Filing Date :NA
(62) Divisional to Application Number :NA
Filing Date :NA

(71)**Name of Applicant :**
1)DAIKIN INDUSTRIES LTD.
Address of Applicant :Umeda Center Building 4 12 Nakazaki nishi 2 chome Kita ku Osaka shi Osaka 5308323 Japan
(72)**Name of Inventor :**
1)TANIGUCHI Tomoisa
2)SEKIMOTO Morimitsu
3)OGAWA Takurou
4)TOOYAMA Eiji
5)HAYASHI Nobuo

(57) Abstract :
Provided in the present invention is a storage unit (62) for storing in association with the phase angle (in) of a voltage (Vin) from an AC power source (30) a plurality of values correlating with a disturbance distorting a current (Iin) delivered to a power converter (13). Provided in the present invention is a power conversion controller (50 60) for performing on off operation control by using the values stored in the storage unit (62) in association with the phase angle (in) of the voltage (Vin) from the AC power source (30) in compensation of the amount of operation (iT) of control in the power conversion unit (13).

No. of Pages : 34 No. of Claims : 6

(12) PATENT APPLICATION PUBLICATION
(21) Application No.201617032547 A
(19) INDIA
(22) Date of filing of Application :23/09/2016
(43) Publication Date : 20/01/2017

(54) Title of the invention : SPATIAL IMAGE DISPLAY DEVICE

(51) International classification :G02B27/22,H04N13/04
(31) Priority Document No :2014072476
(32) Priority Date :31/03/2014
(33) Name of priority country :Japan
(86) International Application No :PCT/JP2015/056646
Filing Date :06/03/2015
(87) International Publication No :WO 2015/151719
(61) Patent of Addition to Application Number :NA
Filing Date :NA
(62) Divisional to Application Number :NA
Filing Date :NA

(71)**Name of Applicant :**
1)SONY CORPORATION
Address of Applicant :1 7 1 Konan Minato ku Tokyo 1080075 Japan
(72)**Name of Inventor :**
1)KANEDA Kazumasa
2)NAKAO Isamu
3)ONO Hiroyuki
4)FUKUMA Yohei

(57) Abstract :
A spatial image display device in one embodiment of the present invention is equipped with an optical plate and one or more reflecting plates. The optical plate has multiple optical elements which with respect to a base plate for which the Z axis direction is the normal line specularly reflect incident light rays in the Z axis direction component and retroreflect incident light rays for the X Y axis direction component. The one or more reflecting plates reflect light emitted from a light emitting body or an illuminated body arranged on the back surface side of the optical plate thereby causing this light to enter the back surface obliquely.

No. of Pages : 32 No. of Claims : 13

(12) PATENT APPLICATION PUBLICATION
(19) INDIA
(22) Date of filing of Application :23/09/2016
(21) Application No.201617032548 A
(43) Publication Date : 20/01/2017

(54) Title of the invention : CERAMIC OXIDE BODY METHOD OF MANUFACTURING THEREOF AND METHOD OF MANUFACTURING GLASS SHEET

(51) International classification :C04B35/101,C04B35/107,C04B38/00
(31) Priority Document No :61/970974
(32) Priority Date :27/03/2014
(33) Name of priority country :U.S.A.
(86) International Application No :PCT/US2015/022434
Filing Date :25/03/2015
(87) International Publication No :WO 2015/148631
(61) Patent of Addition to Application Number :NA
Filing Date :NA
(62) Divisional to Application Number :NA
Filing Date :NA

(71)**Name of Applicant :**
1)CORNING INCORPORATED
Address of Applicant :1 Riverfront Plaza Corning New York 14831 U.S.A.
(72)**Name of Inventor :**
1)MIAO Weiguo
2)SEYMOUR David Ivan
3)WILSON Shunda Denise Cannon

(57) Abstract :
A ceramic oxide body is disclosed. The ceramic oxide body may include fused cast aluminum oxide powder fine aluminum oxide powder and titanium oxide powder.

No. of Pages : 20 No. of Claims : 20

(12) PATENT APPLICATION PUBLICATION
(21) Application No.201617032549 A
(19) INDIA
(22) Date of filing of Application :23/09/2016
(43) Publication Date : 20/01/2017

(54) Title of the invention : WEAR MEMBERS FOR EXCAVATION IMPLEMENTS

(51) International classification :E02F9/28
(31) Priority Document No :PCT/US2015/015739
(32) Priority Date :13/02/2015
(33) Name of priority country :PCT
(86) International Application No :PCT/US2015/015739
Filing Date :13/02/2015
(87) International Publication No :WO 2016/130135
(61) Patent of Addition to Application Number :NA
Filing Date :NA
(62) Divisional to Application Number :NA
Filing Date :NA

(71)**Name of Applicant :**
1)BLACK CAT BLADES LTD.
Address of Applicant :5604 59th Street Edmonton AB T6B 3C3 Canada
(72)**Name of Inventor :**
1)RUVANG John A.

(57) Abstract :
A wear member attachment system for an excavation implement lip can include a wear member that protects an edge of the lip and a wear member adapter that attaches the wear member to the lip the wear member adapter being secured to the lip by a fastener and the wear member being secured to the wear member adapter by another fastener. A method of protecting an excavation implement lip can include securing a wear member adapter to the implement the wear member adapter including at least one receptacle and inserting a protrusion on a wear member into the receptacle. Another system can include a wear member that protects a forward edge of a lip and a wear member adapter that attaches the wear member to the lip between two adjacent teeth. The wear member can comprise a shroud and the adapter can wrap about an edge of the lip.

No. of Pages : 13 No. of Claims : 38

(12) PATENT APPLICATION PUBLICATION
(19) INDIA
(22) Date of filing of Application :21/09/2016
(21) Application No.201617032187 A
(43) Publication Date : 20/01/2017

(54) Title of the invention : INSULIN LIKE GROWTH FACTOR 1 RECEPTOR SPECIFIC ANTIBODIES AND USES THEREOF

(51) International classification	:C07K16/28,A61K39/395,A61K49/00
(31) Priority Document No	:61/948831
(32) Priority Date	:06/03/2014
(33) Name of priority country	:U.S.A.
(86) International Application No	:PCT/CA2014/000862
Filing Date	:04/12/2014
(87) International Publication No	:WO 2015/131258
(61) Patent of Addition to Application Number	:NA
Filing Date	:NA
(62) Divisional to Application Number	:NA
Filing Date	:NA

(71)**Name of Applicant :**
1)NATIONAL RESEARCH COUNCIL OF CANADA
Address of Applicant :1200 Montreal Road Ottawa Ontario K1A 0R6 Canada
(72)**Name of Inventor :**
1)STANIMIROVIC Danica
2)KEMMERICH Kristin
3)HAQQANI Arsalan S.
4)SULEA Traian
5)ARBABI GHAHROUDI Mehdi
6)MASSIE Bernard
7)GILBERT Rnald

(57) Abstract :
The blood brain barrier (BBB) prevents transport of molecules larger than 500 Dal tons from blood to brain. Receptor mediated transcytosis (RMT) facilitates transport across the BBB of specific molecules that bind receptors on brain endothelial cells that form the BBB. An insulin like growth factor 1 receptor (IGF lR) binding antibody or fragment thereof is identified that transmigrates the BBB by RMT. The antibody or fragment is used to deliver a cargo molecule across the BBB wherein the cargo molecule may be a therapeutic or detectable agent. The antibody is a camelid VHH prepared by immunizing a llama with a 933 amino acid IGF 1R polypeptide. Humanized forms of the camelid VHH are also generated.

No. of Pages : 56 No. of Claims : 29

(12) PATENT APPLICATION PUBLICATION
(19) INDIA
(22) Date of filing of Application :21/09/2016

(21) Application No.201617032188 A
(43) Publication Date : 20/01/2017

(54) Title of the invention : METHODS OF MANUFACTURE OF BIS(PHTHALIMIDE)S

(51) International classification :C08G73/10
(31) Priority Document No :61/979748
(32) Priority Date :15/04/2014
(33) Name of priority country :U.S.A.
(86) International Application No :PCT/US2015/025950
Filing Date :15/04/2015
(87) International Publication No :WO 2015/160935
(61) Patent of Addition to Application Number :NA
Filing Date :NA
(62) Divisional to Application Number :NA
Filing Date :NA

(71)**Name of Applicant :**
1)SABIC GLOBAL TECHNOLOGIES B.V.
Address of Applicant :Plasticslaan 1 4612 PX Bergen op Zoom Netherlands
(72)**Name of Inventor :**
1)CHAULAGAIN Mani Raj

(57) Abstract :
A method of manufacture of a bis(phthalimide) composition includes reacting in the presence of molten diphenyl sulfone sulfolane or a combination comprising at least one of the foregoing a substituted phthalic anhydride with an organic diamine. The product mixture can be directly employed in the preparation of polyetherimides and other polyether polymers.

No. of Pages : 31 No. of Claims : 20

(12) PATENT APPLICATION PUBLICATION
(19) INDIA
(22) Date of filing of Application :21/09/2016
(21) Application No.201617032189 A
(43) Publication Date : 20/01/2017

(54) Title of the invention : VACCINE DELIVERY SYSTEMS USING YEAST CELL WALL PARTICLES

(51) International classification :A61K9/00,C12N1/16,C12N1/00
(31) Priority Document No :61/948503
(32) Priority Date :05/03/2014
(33) Name of priority country :U.S.A.
(86) International Application No :PCT/US2015/018728
Filing Date :04/03/2015
(87) International Publication No :WO 2015/134606
(61) Patent of Addition to Application Number :NA
Filing Date :NA
(62) Divisional to Application Number :NA
Filing Date :NA

(71)**Name of Applicant :**
1)ORBIS HEALTH SOLUTIONS LLC
Address of Applicant :111 Smith Hines Road Suites E&F Greenville SC 9607 U.S.A.
(72)**Name of Inventor :**
1)WAGNER Thomas E.

(57) Abstract :
The present invention generally relates to compositions and methods for delivering a vaccine. The compositions and methods disclosed herein are particularly useful in making prophylactic and therapeutic vaccines.

No. of Pages : 37 No. of Claims : 44

(12) PATENT APPLICATION PUBLICATION
(19) INDIA
(22) Date of filing of Application :21/09/2016
(21) Application No.201617032194 A
(43) Publication Date : 20/01/2017

(54) Title of the invention : INSULIN LIKE GROWTH FACTOR 1 RECEPTOR SPECIFIC ANTIBODIES AND USES THEREOF

(51) International classification :C07K16/28,A61K47/42,A61K49/00
(31) Priority Document No :61/948808
(32) Priority Date :06/03/2014
(33) Name of priority country :U.S.A.
(86) International Application No :PCT/CA2014/000860
Filing Date :04/12/2014
(87) International Publication No :WO 2015/131256
(61) Patent of Addition to Application Number :NA
Filing Date :NA
(62) Divisional to Application Number :NA
Filing Date :NA

(71)**Name of Applicant :**
1)NATIONAL RESEARCH COUNCIL OF CANADA
Address of Applicant :1200 Montreal Road Ottawa Ontario K1A 0R6 Canada
(72)**Name of Inventor :**
1)STANIMIROVIC Danica
2)KEMMERICH Kristin
3)HAQQANI Arsalan S.
4)SULEA Traian
5)ARBABI GHAHROUDI Mehdi
6)MASSIE Bernard
7)GILBERT Rnald

(57) Abstract :
The blood brain barrier (BBB) prevents transport of molecules larger than 500 Daltons from blood to brain. Receptor mediated transcytosis (RMT) facilitates transport across the BBB of specific molecules that bind receptors on brain endothelial cells that form the BBB. An insulin like growth factor 1 receptor (IGFlR) binding antibody or fragment thereof is identified that transmigrates the BBB by RMT. The antibody or fragment is used to deliver a cargo molecule across the BBB wherein the cargo molecule may be a therapeutic or detectable agent. The antibody is a camelid VHH prepared by immunizing a llama with a 933 amino acid IGF1R polypeptide. Humanized forms of the camelid VHH are also generated.

No. of Pages : 54 No. of Claims : 28

(12) PATENT APPLICATION PUBLICATION
(19) INDIA
(22) Date of filing of Application :21/09/2016
(21) Application No.201617032198 A
(43) Publication Date : 20/01/2017

(54) Title of the invention : LARYNGEAL MASK

(51) International classification :A61M16/04,A61M16/08,A61M16/00
(31) Priority Document No :201430257
(32) Priority Date :25/02/2014
(33) Name of priority country :Spain
(86) International Application No :PCT/EP2015/053078
Filing Date :13/02/2015
(87) International Publication No :WO 2015/128207
(61) Patent of Addition to Application Number :NA
Filing Date :NA
(62) Divisional to Application Number :NA
Filing Date :NA

(71)**Name of Applicant :**
1)MEDCOM FLOW S.A.
Address of Applicant :Av. Roma 35 entlo. 1ª E 08029 Barcelona Spain
(72)**Name of Inventor :**
1)ACHA GANDARIAS Pedro
2)SAGAL‰S MA‘AS Juan
3)ROCA DE VI‘ALS DELGADO Alejandro
4)CALAF ALCALDE Alberto

(57) Abstract :
A device (1) for the ventilation of a human being or animal which comprises a dome (2) having a cavity (2a) which dome (2) is attached to a laryngeal ring (3) for sealing the human being or animal s internal airways at least one oxygen tube (4) that connects to the cavity (2a) of the dome (2) for allowing oxygen or gases to enter or leave the human being or animal s internal airways and at least one laryngeal aspiration tube (5) different from the oxygen tube (4) that also connects to the cavity (2a) of the dome (2) for allowing air and/or secretions to leave the human being or animal s internal airways.

No. of Pages : 8 No. of Claims : 14

(12) PATENT APPLICATION PUBLICATION
(19) INDIA
(22) Date of filing of Application :21/09/2016
(21) Application No.201617032201 A
(43) Publication Date : 20/01/2017

(54) Title of the invention : PUSHROD ASSEMBLY

(51) International classification :F01L1/14,F01L1/16
(31) Priority Document No :62/024629
(32) Priority Date :15/07/2014
(33) Name of priority country :U.S.A.
(86) International Application No :PCT/US2015/040563
Filing Date :15/07/2015
(87) International Publication No :WO 2016/011150
(61) Patent of Addition to Application Number :NA
Filing Date :NA
(62) Divisional to Application Number :NA
Filing Date :NA

(71)**Name of Applicant :**
1)JACOBS VEHICLE SYSTEMS INC.
Address of Applicant :22 Dudley Town Road Bloomfield Connecticut 06002 U.S.A.
(72)**Name of Inventor :**
1)BALTRUCKI Justin
2)GRON G. Michael
3)DONG Yang

(57) Abstract :
A pushrod assembly for an internal combustion engine comprises a pushrod having a first end and a second end the first end being configured to receive valve actuation motions from a valve actuation motion source and the second end being configured to impart the valve actuation motions to a valve train component. The pushrod includes a resilient element engagement feature. The pushrod assembly includes a fixed support and a resilient element operatively connected to the resilient element engagement feature and the fixed support. The resilient element is configured to bias the pushrod via the resilient element engagement feature toward the valve actuation motion source. An internal combustion engine may comprise the pushrod assembly described herein. A follower assembly may be provided to maintain contact between second end of the pushrod and the valve train component.

No. of Pages : 17 No. of Claims : 15

(12) PATENT APPLICATION PUBLICATION
(19) INDIA
(22) Date of filing of Application :23/09/2016
(21) Application No.201617032564 A
(43) Publication Date : 20/01/2017

(54) Title of the invention : DISPLAY APPARATUS

(51) International classification :G02F1/1335
(31) Priority Document No :61/953165
(32) Priority Date :14/03/2014
(33) Name of priority country :U.S.A.
(86) International Application No :PCT/KR2015/002462
Filing Date :13/03/2015
(87) International Publication No :WO 2015/137769
(61) Patent of Addition to Application Number :NA
Filing Date :NA
(62) Divisional to Application Number :NA
Filing Date :NA

(71)**Name of Applicant :**
1)SAMSUNG ELECTRONICS CO. LTD.
Address of Applicant :129 Samsung ro Yeongtong gu Suwon si Gyeonggi do 443 742 Republic of Korea
(72)**Name of Inventor :**
1)LEE Sang Eun
2)LEE Dae Hee
3)LEE Young Chol
4)CHO Byoung Jin

(57) Abstract :
Disclosed herein is a display apparatus capable of acquiring uniform brightness throughout a liquid crystal display panel by ensuring a sufficient amount of light at the corner areas of the liquid crystal display panel through an improved structure of a reflector. The display apparatus includes: a liquid crystal display panel configured to display an image; a backlight unit disposed at the rear of the liquid crystal display panel and including a plurality of light sources; a bottom chassis in which the backlight unit is rested; and a reflector accommodated in the bottom chassis and configured to forwardly reflect light emitted from the plurality of light sources toward the liquid crystal display panel; and a reflection angle adjusting part disposed in each corner of the reflector and configured to reflect light emitted from the plurality of light sources to cause the reflected light to be incident to corner areas of the liquid crystal display panel.

No. of Pages : 11 No. of Claims : 15

(12) PATENT APPLICATION PUBLICATION
(19) INDIA
(22) Date of filing of Application :23/09/2016
(21) Application No.201617032565 A
(43) Publication Date : 20/01/2017

(54) Title of the invention : TRANSMITTING APPARATUS AND INTERLEAVING METHOD THEREOF

(51) International classification :H03M13/27,H03M13/11,H04L1/00
(31) Priority Document No :61/955410
(32) Priority Date :19/03/2014
(33) Name of priority country :U.S.A.
(86) International Application No :PCT/KR2015/002677
Filing Date :19/03/2015
(87) International Publication No :WO 2015/142076
(61) Patent of Addition to Application Number :NA
Filing Date :NA
(62) Divisional to Application Number :NA
Filing Date :NA

(71)**Name of Applicant :**
1)SAMSUNG ELECTRONICS CO. LTD.
Address of Applicant :129 Samsung ro Yeongtong gu Suwon si Gyeonggi do 16677 Republic of Korea
(72)**Name of Inventor :**
1)JEONG. Hong sil
2)KIM Kyung joong
3)MYUNG Se ho

(57) Abstract :
A transmitting apparatus is provided. The transmitting apparatus includes: an encoder configured to generate a Low Density Parity Check (LDPC) codeword by LDPC encoding based on a parity check matrix; an interleaver configured to interleave the LDPC codeword; and a modulator configured to map the interleaved LDPC codeword onto a plurality of modulation symbols wherein the modulator is configured to map bits included in a predetermined bit group from among a plurality of bit groups constituting the LDPC codeword onto a predetermined bit of each of the modulation symbols.

No. of Pages : 136 No. of Claims : 15

(12) PATENT APPLICATION PUBLICATION
(19) INDIA
(22) Date of filing of Application :23/09/2016
(21) Application No.201617032566 A
(43) Publication Date : 20/01/2017

(54) Title of the invention : PHOTOGRAPHING LENS AND PHOTOGRAPHING APPARATUS

(51) International classification :G02B9/60,G02B11/30,G02B13/18
(31) Priority Document No :1020140083899
(32) Priority Date :04/07/2014
(33) Name of priority country :Republic of Korea
(86) International Application No :PCT/KR2015/006805
Filing Date :02/07/2015
(87) International Publication No :WO 2016/003211
(61) Patent of Addition to Application Number :NA
Filing Date :NA
(62) Divisional to Application Number :NA
Filing Date :NA

(71)**Name of Applicant :**
1)SAMSUNG ELECTRONICS CO. LTD.
Address of Applicant :129 Samsung ro Yeongtong gu Suwon si Gyeonggi do 16677 Republic of Korea
(72)**Name of Inventor :**
1)ZHAO Liefeng
2)CHOI Sung wook

(57) Abstract :
A photographing lens and a photographing apparatus including the same. The photographing lens includes a first lens having a positive refractive power or a negative refractive power and being meniscus shaped; a second lens having a positive refractive power; a third lens having a negative refractive power; a fourth lens having a positive refractive power and having a surface convex toward the image side; and a fifth lens having a negative refractive power having a surface concave from the image side and including at least one aspheric surface wherein the first through fifth lenses are sequentially arranged from the object side toward the image side.

No. of Pages : 32 No. of Claims : 15

(12) PATENT APPLICATION PUBLICATION
(21) Application No.201617032575 A
(19) INDIA
(22) Date of filing of Application :23/09/2016
(43) Publication Date : 20/01/2017

(54) Title of the invention : PENETRATION DEVICE FOR USE IN FIRE FIGHTING OPERATIONS IN PARTICULAR IN THE CONTEXT OF AIRPORT RESCUE

(51) International classification :A62C27/00,A62C31/22
(31) Priority Document No :14162343.9
(32) Priority Date :28/03/2014
(33) Name of priority country :EPO
(86) International Application No :PCT/IB2015/052282
Filing Date :27/03/2015
(87) International Publication No :WO 2015/145398
(61) Patent of Addition to Application Number :NA
Filing Date :NA
(62) Divisional to Application Number :NA
Filing Date :NA

(71)**Name of Applicant :**
1)IVECO MAGIRUS AG
Address of Applicant :Nicolaus Otto Str. 27 89079 Ulm Germany
(72)**Name of Inventor :**
1)SEMMLER Oliver

(57) Abstract :
Penetration device (P) for use in fire fighting operations in particular in the context of airport rescue comprising a fixed member (FP) suitable to be associated with a tip of a arm or of a boom (15) and a member partially tapered and slidingly movable (MC) with respect to said fixed member in order to penetrate a wall of a body for injecting a fire retardant and/or fire extinguishing medium within said body wherein the fixed member (FP) comprises a hollow tubular outer member (OC) and the movable member (MC) comprises also a hollow tubular portion coaxially arranged within the outer member; the fixed member (FP) comprising an inner hollow tubular member (IM) fixed with the outer hollow tubular member (OC) and arranged so as the movable member is interposed between the inner and outer members (IC OC) the inner and outer members (IC OC) both defining a sliding guide for the movable portion (MC).

No. of Pages : 12 No. of Claims : 10

(12) PATENT APPLICATION PUBLICATION
(19) INDIA
(22) Date of filing of Application :22/09/2016
(21) Application No.201617032350 A
(43) Publication Date : 20/01/2017

(54) Title of the invention : CAREER ANALYTICS PLATFORM

(51) International classification :G06Q10/06
(31) Priority Document No :765/DEL/2014
(32) Priority Date :14/03/2014
(33) Name of priority country :India
(86) International Application No :PCT/IN2015/000128
Filing Date :16/03/2015
(87) International Publication No :WO 2015/136555
(61) Patent of Addition to Application Number :NA
Filing Date :NA
(62) Divisional to Application Number :NA
Filing Date :NA

(71)**Name of Applicant :**
1)SALIL Pande
Address of Applicant :Vipul Belmonte T4 Flat 1102 DLF Golf Course Road Sector 53 Gurgaon Haryana Haryana India
(72)**Name of Inventor :**
1)SALIL Pande

(57) Abstract :
A method and system for assessing a career profile of a candidate is disclosed. The system comprises a database configured to include a plurality of parameters and a plurality of scores respective to each parameter a parser configured to parse the career profile to identify at least one parameter from the plurality of parameters within the career profile and an analytics engine configured to retrieve a score from the plurality of scores for the at least one parameter identified within the career profile compute a score of at least one category based on the retrieved score wherein the at least one category comprises the at least one parameter identified within the career profile and provide feedback to the candidate on the career profile in accordance with the computed score of the at least one category.

No. of Pages : 32 No. of Claims : 40

(12) PATENT APPLICATION PUBLICATION
(19) INDIA
(22) Date of filing of Application :22/09/2016
(21) Application No.201617032357 A
(43) Publication Date : 20/01/2017

(54) Title of the invention : POWER GENERATING APPARATUS

(51) International classification :F03D7/02,F03D1/04
(31) Priority Document No :1406710.2
(32) Priority Date :15/04/2014
(33) Name of priority country :U.K.
(86) International Application No :PCT/GB2015/000118
Filing Date :10/04/2015
(87) International Publication No :WO 2015/159041
(61) Patent of Addition to Application Number :NA
Filing Date :NA
(62) Divisional to Application Number :NA
Filing Date :NA

(71)**Name of Applicant :**
1)WHOOSH 2013 LIMITED
Address of Applicant :The Old West Gun Works Savile Street East Sheffield South Yorkshire S4 7UQ U.K.
(72)**Name of Inventor :**
1)SHAWCROSS Brian
2)FACEY Hugh David
3)CLARKE Neil

(57) Abstract :
Power generating apparatus (10) comprises a housing (14) and a wind turbine (12) within the housing. The wind turbine comprises a plurality of rotatable turbine blades (66). The housing has a forward region (20) extending forwardly of the wind turbine the forward region defining an inlet opening (22) for air and a rearward region (24) extending rearwardly of the wind turbine the rearward region defining an outlet opening for air.

No. of Pages : 20 No. of Claims : 49

(12) PATENT APPLICATION PUBLICATION
(19) INDIA
(22) Date of filing of Application :22/09/2016
(21) Application No.201617032363 A
(43) Publication Date : 20/01/2017

(54) Title of the invention : POWER CONVERTER CIRCUIT AND METHOD THEREOF

(51) International classification :H05B37/02
(31) Priority Document No :NA
(32) Priority Date :NA
(33) Name of priority country :NA
(86) International Application No :PCT/CN2014/073976
Filing Date :24/03/2014
(87) International Publication No :WO 2015/143612
(61) Patent of Addition to Application Number :NA
Filing Date :NA
(62) Divisional to Application Number :NA
Filing Date :NA

(71)**Name of Applicant :**
1)REDISEM LTD.
Address of Applicant :301 302 IC Development Centre 6 Science Park West Avenue H.K. Science Park Shatin Hong Kong 999077 China
(72)**Name of Inventor :**
1)JACQUES Russell
2)COULSON David

(57) Abstract :
A power converter circuit and an associated method of converting an AC power supply. The power converter circuit comprises: a supply rectifier circuit (2) for rectifying an AC supply power to generate a rectified supply power; an inverter circuit (3) for receiving the rectified supply power to generate an inverted supply power; a load rectifier circuit (4) for rectifying the inverted supply power to generate a rectified load power for supplying a load current to a load (5); and a boost circuit (6) driven by the load current to provide a boosted voltage to the rectified supply power.

No. of Pages : 9 No. of Claims : 18

(12) PATENT APPLICATION PUBLICATION
(21) Application No.201617032364 A
(19) INDIA
(22) Date of filing of Application :22/09/2016
(43) Publication Date : 20/01/2017

(54) Title of the invention : HIGH STRENGTH HOT DIP GALVANIZED STEEL SHEET AND METHOD FOR MANUFACTURING HIGH STRENGTH ALLOYED HOT DIP GALVANIZED STEEL SHEET

(51) International classification :C21D9/46,C22C38/14,C22C38/60
(31) Priority Document No :2014088044
(32) Priority Date :22/04/2014
(33) Name of priority country :Japan
(86) International Application No :PCT/JP2015/001526
Filing Date :18/03/2015
(87) International Publication No :WO 2015/162849
(61) Patent of Addition to Application Number :NA
Filing Date :NA
(62) Divisional to Application Number :NA
Filing Date :NA

(71)**Name of Applicant :**
1)JFE STEEL CORPORATION
Address of Applicant :2 3 Uchisaiwai cho 2 chome Chiyoda ku Tokyo 1000011 Japan
(72)**Name of Inventor :**
1)KIMURA Hideyuki
2)FUJITA Koichiro
3)HASEGAWA Hiroshi

(57) Abstract :
The present invention provides a hot dip galvanized steel sheet having TS of 780 MPa or above and exceptional surface appearance and uniformity of material quality in the coil lengthwise direction as well as a method for manufacturing an alloyed hot dip galvanized steel sheet. This method for manufacturing a hot dip galvanized steel sheet is a method for manufacturing a high strength hot dip galvanized steel sheet having a composition that contains 20 to 60% in terms of area ratio of martensite and 40 to 80% in terms of area ratio of ferrite characterized in that a steel slab having a prescribed component composition is subjected to hot rolling and cold rolling followed by prescribed primary annealing and then by prescribed pickling prescribed secondary annealing and a hot dip galvanization process which are carried out sequentially.

No. of Pages : 57 No. of Claims : 4

(12) PATENT APPLICATION PUBLICATION
(21) Application No.201617032368 A
(19) INDIA
(22) Date of filing of Application :22/09/2016
(43) Publication Date : 20/01/2017

(54) Title of the invention : SOLID LUBRICANT COATING COMPOSITION THREADED JOINT FOR PIPES COMPRISING SOLID LUBRICANT COATING FORMED USING SAID COMPOSITION AND PRODUCTION METHOD FOR SAID THREADED JOINT FOR PIPES

(51) International classification :C10M169/04,F16L15/04,C10M107/02
(31) Priority Document No:2014058702
(32) Priority Date :20/03/2014
(33) Name of priority country :Japan
(86) International Application No :PCT/JP2015/001112
Filing Date :03/03/2015
(87) International Publication No :WO 2015/141159
(61) Patent of Addition to Application Number :NA
Filing Date :NA
(62) Divisional to Application Number :NA
Filing Date :NA

(71)**Name of Applicant :**
1)NIPPON STEEL & SUMITOMO METAL CORPORATION
Address of Applicant :6 1 Marunouchi 2 chome Chiyoda ku Tokyo 1008071 Japan
2)VALLOUREC OIL AND GAS FRANCE
(72)**Name of Inventor :**
1)GOTO Kunio

(57) Abstract :
Provided are: a threaded joint for pipes that even in an extremely low temperature environment and without using a compound grease suppresses the generation of rust exhibits excellent seizure resistance and airtightness and has a surface that is unlikely to be sticky; a production method therefor; and a composition for forming a solid lubricant coating on the threaded joint for pipes. A solid lubricant coating (24) formed from a composition containing a binding agent a fluorine based additive a solid lubricant and an anti rust additive is coated as an uppermost surface treatment coating on the contact surface of at least either a pin or a box. The solid lubricant coating (24) is capable of maintaining adhesiveness even if exposed to extremely low temperature environments is capable of exhibiting a lubrication applying function is capable of suppressing thread joint seizure and is capable of ensuring airtightness after fastening.

No. of Pages : 74 No. of Claims : 14

(12) PATENT APPLICATION PUBLICATION
(19) INDIA
(22) Date of filing of Application :23/09/2016
(21) Application No.201617032581 A
(43) Publication Date : 20/01/2017

(54) Title of the invention : IMPROVED DISC SHAPED THYRISTOR FOR A PLURALITY OF PLATED THROUGH SEMICONDUCTOR COMPONENTS

(51) International classification	:H01L25/11,H01L23/473,H01L23/00
(31) Priority Document No	:10 2014 102 493.1
(32) Priority Date	:26/02/2014
(33) Name of priority country	:Germany
(86) International Application No	:PCT/EP2015/053289
Filing Date	:17/02/2015
(87) International Publication No	:WO 2015/128220
(61) Patent of Addition to Application Number	:NA
Filing Date	:NA
(62) Divisional to Application Number	:NA
Filing Date	:NA

(71)**Name of Applicant :**
1)INFINEON TECHNOLOGIES BIPOLAR GMBH & CO. KG
Address of Applicant :Max Planck Str. 5 59581 Warstein Germany
2)SIEMENS AKTIENGESELLSCHAFT
(72)**Name of Inventor :**
1)SCHENK Mario
2)PRZYBILLA Jens
3)BARTHELMESS Reiner
4)DORN Jrg

(57) Abstract :
The invention relates to a disc shaped thyristor (1) for throughplating a plurality of semiconductor components by means of clamping means (4 13) producing a clamping force (F) comprising: a housing (2 3 7 8); at least one first semiconductor component (6) of a first type received in the housing; at least one second semiconductor component (5) of a second type different from the first type received in the housing; wherein the housing (2 3 7 8) comprises at least one metallic pressure plate (2) which spreads over the first (6) and second (5) semiconductor component and is aligned substantially at right angles to the clamping force (F) for clamping the first and second semiconductor components wherein the pressure plate (2) is configured in such a way that the clamping force (F) acts thereon in a locally delimited (9) manner in order to clamp the first (6) and the second (5) semiconductor component by way of the pressure plate (2) wherein the first semiconductor component (6) is arranged below the local sphere of influence (9) of the clamping force (F) and the second component (5) is arranged at least partly outside of the local sphere of influence (9).

No. of Pages : 9 No. of Claims : 17

(12) PATENT APPLICATION PUBLICATION
(19) INDIA
(22) Date of filing of Application :23/09/2016
(21) Application No.201617032597 A
(43) Publication Date : 20/01/2017

(54) Title of the invention : SUPPORT MODULE

(51) International classification :F01L1/053,F01L1/18
(31) Priority Document No :10 2014 210 474.2
(32) Priority Date :03/06/2014
(33) Name of priority country :Germany
(86) International Application No :PCT/DE2015/200235
Filing Date :31/03/2015
(87) International Publication No :WO 2015/185045
(61) Patent of Addition to Application Number :NA
Filing Date :NA
(62) Divisional to Application Number :NA
Filing Date :NA

(71)**Name of Applicant :**
1)SCHAEFFLER TECHNOLOGIES AG & CO. KG
Address of Applicant :Industriestrae 1 3 91074 Herzogenaurach Germany
(72)**Name of Inventor :**
1)GR–TSCH Andreas
2)KRAWIETZ Christopher
3)MAYER Johanna

(57) Abstract :
The invention relates to a support module (1) for an OHC valve gear of an internal combustion engine comprising two upright supporting walls (2) spaced apart from each other which can be connected to a cylinder head cover in the segment of the upper faces (3) of the supporting walls and to a cylinder head in the segment of the lower faces (4) of the supporting walls wherein at least one camshaft (5) and at least one lever pin (6 7) having one or more cam following levers (8 9) are supported in the supporting walls (2) wherein the supporting walls (2) are integrally bridged at the upper faces (3) thereof by a transverse bar (10) wherein a leg (11) for directly connecting the support module (1) to the cylinder head integrally protrudes from the lower face (4) of each supporting wall (2) and wherein the supporting walls (2) can be produced together with the transverse bar (10) and the legs (11) from steel sheet by means of punching and bending.

No. of Pages : 5 No. of Claims : 8

(12) PATENT APPLICATION PUBLICATION
(21) Application No.201617032599 A
(19) INDIA
(22) Date of filing of Application :23/09/2016
(43) Publication Date : 20/01/2017

(54) Title of the invention : DECOILING OF A COILED STRIP

(51) International classification :B21C47/22,B21C47/24,B21C47/34
(31) Priority Document No :14164068.0
(32) Priority Date :09/04/2014
(33) Name of priority country :EPO
(86) International Application No :PCT/EP2015/057288
Filing Date :02/04/2015
(87) International Publication No :WO 2015/155108
(61) Patent of Addition to Application Number :NA
Filing Date :NA
(62) Divisional to Application Number :NA
Filing Date :NA

(71)**Name of Applicant :**
1)PRIMETALS TECHNOLOGIES AUSTRIA GMBH
Address of Applicant :Turmstrae 44 A 4031 Linz Austria
(72)**Name of Inventor :**
1)SEILINGER Alois
2)MINICHMAYR Robert
3)PEITL Wolfgang

(57) Abstract :
The invention relates to a decoiling device (1) for decoiling a strip (5) in the form of a coil (3) in order for the strip (5) to be hot rolled. The decoiling device (1) comprises at least two bottom rolls (7) for supporting the coil (3) from underneath a strip end detaching mechanism (9) for detaching the end (11) of the strip from the coil (3) at a decoiling end and a pressing roll (13) which is arranged on the coil (3) in such a way as to stabilize the position of the coil (3) when the end (11) of the strip is detached.

No. of Pages : 11 No. of Claims : 4

(12) PATENT APPLICATION PUBLICATION
(19) INDIA
(22) Date of filing of Application :23/09/2016
(21) Application No.201617032604 A
(43) Publication Date : 20/01/2017

(54) Title of the invention : 2 3 DISUBSTITUTED PYRIDINE COMPOUNDS AS TGF BETA INHIBITORS AND METHODS OF USE

(51) International classification	:C07D401/14,C07D401/04,C07D417/04
(31) Priority Document No	:61/976880
(32) Priority Date	:08/04/2014
(33) Name of priority country	:U.S.A.
(86) International Application No	:PCT/US2015/024146
Filing Date	:02/04/2015
(87) International Publication No	:WO 2015/157093
(61) Patent of Addition to Application Number	:NA
Filing Date	:NA
(62) Divisional to Application Number	:NA
Filing Date	:NA

(71)**Name of Applicant :**
1)RIGEL PHARMACEUTICALS INC.
Address of Applicant :1180 Veterans Boulevard South San Francisco CA 94080 U.S.A.
(72)**Name of Inventor :**
1)SINGH Rajinder
2)BHAMIDIPATI Somasekhar
3)DING Pingyu
4)PAYAN Donald
5)GELMAN Marina
6)KINSELLA Todd

(57) Abstract :
The invention described herein comprises compounds of formula (IV) and a method of treating cancer comprising administering to a subject having cancer one of the compounds in conjunction with another therapeutic treatment of cancer. The compounds (IV) inhibit signaling by a member of the TGF superfamily such as Nodal or Activin.

(IV)

No. of Pages : 389 No. of Claims : 10

(12) PATENT APPLICATION PUBLICATION
(19) INDIA
(22) Date of filing of Application :21/09/2016
(21) Application No.201617032202 A
(43) Publication Date : 20/01/2017

(54) Title of the invention : INDUCTION MOTOR WITH TRANSVERSE LIQUID COOLED ROTOR AND STATOR

(51) International classification :H02K1/20,H02K1/32,H02K5/20
(31) Priority Document No :61/971421
(32) Priority Date :27/03/2014
(33) Name of priority country :U.S.A.
(86) International Application No :PCT/US2015/021453
Filing Date :19/03/2015
(87) International Publication No:WO 2015/148258
(61) Patent of Addition to Application Number :NA
Filing Date :NA
(62) Divisional to Application Number :NA
Filing Date :NA

(71)**Name of Applicant :**
1)PRIPPELL TECHNOLOGIES LLC
Address of Applicant :5781 Valley Oak Drive Los Angeles CA 90068 U.S.A.
(72)**Name of Inventor :**
1)RIPPEL Wally E.
2)RIPPEL Eric E.

(57) Abstract :
An electric machine with fluid cooling. The electric machine includes a stator the stator having a stator winding and a stator core having a plurality of stacked magnetic laminations each of the laminations of the stator core having a plurality of apertures overlapping to form a plurality of stator fluid channels a stator fluid channel of the plurality of stator fluid channels being not entirely axial. The electric machine further includes a rotor the rotor having a shaft and a rotor core having a plurality of stacked magnetic laminations each of the laminations of the rotor core having a plurality of apertures overlapping to form a plurality of rotor fluid channels and a rotary fluid coupling in fluid communication with the rotor fluid channels. The rotor and the stator are configured to form a magnetic circuit comprising an air gap between the rotor and the stator.

No. of Pages : 25 No. of Claims : 27

(12) PATENT APPLICATION PUBLICATION
(19) INDIA
(22) Date of filing of Application :21/09/2016

(21) Application No.201617032203 A
(43) Publication Date : 20/01/2017

(54) Title of the invention : THERMOFORMING SHEETS AND THERMOFORMED CONTAINERS PREPARED THEREFROM

(51) International classification :B65D77/20
(31) Priority Document No :61/974995
(32) Priority Date :03/04/2014
(33) Name of priority country :U.S.A.
(86) International Application No :PCT/US2015/024026
Filing Date :02/04/2015
(87) International Publication No :WO 2015/153854
(61) Patent of Addition to Application Number :NA
Filing Date :NA
(62) Divisional to Application Number :NA
Filing Date :NA

(71)**Name of Applicant :**
1)PRINTPACK ILLINOIS INC.
Address of Applicant :1400 Abbott Drive Elgin Illinois 60123 U.S.A.
(72)**Name of Inventor :**
1)SANDERS Daniel Clayton
2)SHERRILL Amy Whiteman
3)ELLEITHY Rabeh H.
4)BOWEN Harold Stephen
5)KOMRO Ronald W.

(57) Abstract :
Forming webs and packages are provided having improved sealability to peelable lidstocks. The thermoformed containers (12) may have a mouth (14) having an opening and a flange being disposed about the opening the flange formed from a forming web and having a thickness greater than about 12 mils and up to about 80 mils. The forming web may have a base layer (20) with a skim coating (24) thereon a portion of the skim coating being on the flange having a skim coating thickness from about 2 mils to about 8 mils. A peelable lid (18) may include a film (28) with an inner lid sealant layer (26) which is sealed to the portion of the skim coating on the flange the skim coating and inner lid sealant layer each having a common polyolefin majority component the common polyolefin component being different than a majority component of the base layer.

No. of Pages : 10 No. of Claims : 20

(12) PATENT APPLICATION PUBLICATION
(21) Application No.201617032204 A
(19) INDIA
(22) Date of filing of Application :21/09/2016
(43) Publication Date : 20/01/2017

(54) Title of the invention : BIAS MECHANISMS FOR A ROCKER ARM AND LOST MOTION COMPONENT OF A VALVE BRIDGE

(51) International classification :F01L13/00,F01L1/24,F01L1/18
(31) Priority Document No :62/024629
(32) Priority Date :15/07/2014
(33) Name of priority country :U.S.A.
(86) International Application No :PCT/US2015/040498
Filing Date :15/07/2015
(87) International Publication No :WO 2016/011109
(61) Patent of Addition to Application Number :NA
Filing Date :NA
(62) Divisional to Application Number :NA
Filing Date :NA

(71)**Name of Applicant :**
1)JACOBS VEHICLE SYSTEMS INC.
Address of Applicant :22 East Dudley Town Road Bloomfield Connecticut 06002 U.S.A.
(72)**Name of Inventor :**
1)BALTRUCKI Justin
2)GRON G. Michael

(57) Abstract :
Systems for actuating at least two engine comprise a valve bridge operatively connected to the at least two engine valves and having a hydraulically actuated lost motion component. A rocker arm has a motion receiving end configured to receive valve actuation motions from a valve actuation motion source and a motion imparting end for conveying the valve actuation motions and hydraulic fluid to the lost motion component. The motion receiving end is biased toward the valve actuation motion source. A bias mechanism supported by either the rocker arm valve bridge or both is configured to bias the motion receiving end of the rocker arm and the lost motion component into contact with each other. By maintaining such contact the bias mechanism helps maintain the supply of hydraulic fluid from the rocker arm to the lost motion component.

No. of Pages : 17 No. of Claims : 15

(12) PATENT APPLICATION PUBLICATION
(21) Application No.201617032205 A
(19) INDIA
(22) Date of filing of Application :21/09/2016
(43) Publication Date : 20/01/2017

(54) Title of the invention : WATERPROOF CONNECTOR

(51) International classification :H01R13/52
(31) Priority Document No :2014059871
(32) Priority Date :24/03/2014
(33) Name of priority country :Japan
(86) International Application No :PCT/JP2015/056288
Filing Date :04/03/2015
(87) International Publication No :WO 2015/146508
(61) Patent of Addition to Application Number :NA
Filing Date :NA
(62) Divisional to Application Number :NA
Filing Date :NA

(71)**Name of Applicant :**
1)SUMITOMO WIRING SYSTEMS LTD.
Address of Applicant :1 14 Nishisuehiro cho Yokkaichi shi Mie 5108503 Japan
(72)**Name of Inventor :**
1)TANAKA Nobuyoshi

(57) Abstract :
Provided is a waterproof connector capable of suppressing increases in manufacturing costs even if the number of blank cavities increases. In a portion of a rear holder (50) that corresponds to a cavity (21) which is distinct from a blank cavity (21V) a terminal intake port (53) is provided that allows for a terminal metal fitting (10) to be introduced forward; a portion of the rear holder (50) that corresponds to the blank cavity (21V) is plugged with a closing part (57) and on the front surface of the rear holder (50) a pressing seal part (59) is provided that presses a region of the rear surface of a waterproof rubber stopper (40) that surrounds the circumference of a through hole (41) that corresponds to at least the blank cavity (21V).

No. of Pages : 21 No. of Claims : 2

(12) PATENT APPLICATION PUBLICATION
(19) INDIA
(22) Date of filing of Application :22/09/2016

(21) Application No.201617032369 A
(43) Publication Date : 20/01/2017

(54) Title of the invention : WIND TURBINE WITH OVER RATING CONTROL

(51) International classification :F03D7/02
(31) Priority Document No :NA
(32) Priority Date :NA
(33) Name of priority country :NA
(86) International Application No :PCT/DK2014/050056
Filing Date :12/03/2014
(87) International Publication No :WO 2015/135546
(61) Patent of Addition to Application Number :NA
Filing Date :NA
(62) Divisional to Application Number :NA
Filing Date :NA

(71)**Name of Applicant :**
1)VESTAS WIND SYSTEMS A/S
Address of Applicant :Hedeager 42 8200 Aarhus N Denmark
(72)**Name of Inventor :**
1)HALES Kelvin
2)SPRUCE Chris

(57) Abstract :
A method is disclosed for controlling a wind turbine generator to provide power above a rated level based upon operational constraints. The wind turbine includes an over rating controller that calculates an over rating power demand in response to the values of one or more operating parameters and communicates this demand to the generator. An over rating command value is calculated according to set points of the operating parameter(s) the calculation taking into account the extent to which the operating parameter differs from these set points. The over rating command value may vary proportionately with the difference between the operating parameter and the associated set point. If multiple operating parameters are used then the over rating power demand may correspond to the minimum over rating command value. Furthermore the power demand maybe communicated to wind turbine generators individually or may be calculated for a wind turbine park.

No. of Pages : 16 No. of Claims : 12

(12) PATENT APPLICATION PUBLICATION
(21) Application No.201617032370 A
(19) INDIA
(22) Date of filing of Application :22/09/2016
(43) Publication Date : 20/01/2017

(54) Title of the invention : CASE HARDENING STEEL WIRE

(51) International classification :C22C38/00,C22C38/60,C21D1/32
(31) Priority Document No :2014040197
(32) Priority Date :03/03/2014
(33) Name of priority country :Japan
(86) International Application No :PCT/JP2015/054408
Filing Date :18/02/2015
(87) International Publication No :WO 2015/133273
(61) Patent of Addition to Application Number :NA
Filing Date :NA
(62) Divisional to Application Number :NA
Filing Date :NA

(71)**Name of Applicant :**
1)NIPPON STEEL & SUMITOMO METAL CORPORATION
Address of Applicant :6 1 Marunouchi 2 chome Chiyoda ku Tokyo 1008071 Japan
(72)**Name of Inventor :**
1)HASHIGUCHI Kunio
2)HORIMOTO Masayuki
3)IMATAKA Hideki
4)OHASHI Tetsuya

(57) Abstract :
A case hardening steel wire which has a chemical composition containing in mass% 0.10 0.24% of C 0.16 0.35% of Si 0.40 1.00% of Mn 0.005 0.050% of S 1.65 1.90% of Cr 0.015 0.060% of Al 0.005 0.060% of Nb 0.0130 0.0250% of N 0 0.20% of Cu 0 0.20% of Ni 0 0.20% of V and 0 0.0050% of Ca with the balance made up of Fe and impurities and which satisfies 15 = Mn/S = 150 0.75 = Cr/(Si + 2Mn) = 1.40 and 0.30 = Si — Cr = 0.65. Elements among the impurities satisfy P = 0.020% Ti = 0.005% Mo = 0.03% and O = 0.0020%. The hardness (HV) of the portion from the surface to the depth of 50 µm is 250 or less. In the portion from the surface to the depth of half the radius the total number of Al precipitates and Nb precipitates having circle equivalent diameters of 100 nm or more and the total number of Al precipitates and Nb precipitates having circle equivalent diameters of 5 nm or more but less than 100 nm are 100 precipitates/100 µm or less and 100 precipitates/25 µm or more respectively.

No. of Pages : 42 No. of Claims : 4

(12) PATENT APPLICATION PUBLICATION
(19) INDIA
(22) Date of filing of Application :22/09/2016
(21) Application No.201617032382 A
(43) Publication Date : 20/01/2017

(54) Title of the invention : METHOD IN A RADAR SYSTEM RADAR SYSTEM AND/OR DEVICE OF A RADAR SYSTEM

(51) International classification :G01S13/00,G01S13/34,G01S13/87
(31) Priority Document No :10 2014 104 273.5
(32) Priority Date :26/03/2014
(33) Name of priority country :Germany
(86) International Application No :PCT/DE2015/100119
Filing Date :23/03/2015
(87) International Publication No :WO 2015/144134
(61) Patent of Addition to Application Number :NA
Filing Date :NA
(62) Divisional to Application Number :NA
Filing Date :NA

(71)**Name of Applicant :**
1)SYMEO GMBH
Address of Applicant :Prof. Messerschmitt Str. 3 85579 Neubiberg Germany
(72)**Name of Inventor :**
1)GULDEN Peter
2)VOSSIEK Martin

(57) Abstract :
The invention relates to a method in a radar system wherein: in a first non coherent transmitting receiving unit (NKSE1) a first signal (sigTX1) is generated and is transmitted in particular emitted via a path (SP); in a further in particular second non coherent transmitting receiving unit (NKSE2) a first signal (sigTX2) is generated and is sent in particular emitted via the path (SP); in the first transmitting receiving unit (NKSE1) a comparison signal (sigC12) is formed from the first signal (sigTX1) of the first transmitting receiving unit and from such a first signal (sigTX2) received from the further transmitting receiving unit (NKSE2) via the path (SP); and in the further transmitting receiving unit (NKSE2) a further comparison signal (sigC21) is formed from the first signal (sigTX2) of the further transmitting receiving unit and from such a first signal (sigTX1) received from the first transmitting receiving unit (NKSE1) via the path (SP) wherein the further comparison signal (sigC21) is transmitted in particular communicated to the first transmitting receiving unit (NKSE1) by the further transmitting receiving unit (NKSE2). The invention further relates to a radar system and to a device of a radar system that perform such a method.

No. of Pages : 34 No. of Claims : 20

(12) PATENT APPLICATION PUBLICATION
(19) INDIA
(22) Date of filing of Application :23/09/2016
(21) Application No.201617032606 A
(43) Publication Date : 20/01/2017

(54) Title of the invention : PCSK9 VACCINES

(51) International classification :A61K39/00,A61P3/06,A61P9/00
(31) Priority Document No :14157221.4
(32) Priority Date :28/02/2014
(33) Name of priority country :EPO
(86) International Application No :PCT/EP2015/053725
Filing Date :23/02/2015
(87) International Publication No :WO 2015/128287
(61) Patent of Addition to Application Number :NA
Filing Date :NA
(62) Divisional to Application Number :NA
Filing Date :NA

(71)**Name of Applicant :**
1)AFFIRIS AG
Address of Applicant :Karl Farkas Gasse 22 A 1030 Vienna Austria
(72)**Name of Inventor :**
1)GALABOVA Gergana
2)STAFFLER G¼nther
3)BRUNNER Sylvia
4)WINSAUER Gabriele
5)MAIRHOFER Andreas
6)JUNO Claudia

(57) Abstract :
The present invention relates to a vaccine capable to induce production of antibodies directed to PCSK9 in vivo.

No. of Pages : 37 No. of Claims : 10

(12) PATENT APPLICATION PUBLICATION
(21) Application No.201617032607 A
(19) INDIA
(22) Date of filing of Application :23/09/2016
(43) Publication Date : 20/01/2017

(54) Title of the invention : NEBULIZER AND NEBULIZER KIT

(51) International classification :A61M11/02
(31) Priority Document No :2014037225
(32) Priority Date :27/02/2014
(33) Name of priority country :Japan
(86) International Application No :PCT/JP2015/053912
Filing Date :13/02/2015
(87) International Publication No :WO 2015/129478
(61) Patent of Addition to Application Number :NA
Filing Date :NA
(62) Divisional to Application Number :NA
Filing Date :NA

(71)**Name of Applicant :**
1)OMRON HEALTHCARE CO. LTD.
Address of Applicant :53 Kunotsubo Terado cho Muko shi Kyoto 6170002 Japan
(72)**Name of Inventor :**
1)SASAI Yoichi
2)ITO Shinichi

(57) Abstract :
A nebulizer kit (1) having: an atomizer section (210) that generates aerosol; and particle sorting paths (111 121) connected to the atomizer section that sort liquid particles included in the aerosol and adjust the distribution of the aerosol particles then guide the aerosol towards a discharge port. The particle sorting paths comprise: a first particle sorting path (111) having a substantially uniform cross sectional area in a first direction; and a second particle sorting path (121) comprising an internal end wall (123) curving from the first direction and facing a second direction included in substantially the same plane as the first direction. The first particle sorting path guides the aerosol along the first direction towards the second particle sorting path. The internal end wall of the second particle sorting path adsorbs aerosol particles having a particle diameter of at least a set value and guides the aerosol in the second direction.

No. of Pages : 26 No. of Claims : 6

(12) PATENT APPLICATION PUBLICATION
(19) INDIA
(22) Date of filing of Application :23/09/2016
(21) Application No.201617032610 A
(43) Publication Date : 20/01/2017

(54) Title of the invention : BRAKE ACTUATION MECHANISM FOR A DISC BRAKE AND DISC BRAKE COMPRISING THE SAME

(51) International classification :F16D65/18,F16D65/56,F16D66/02
(31) Priority Document No :NA
(32) Priority Date :NA
(33) Name of priority country :NA
(86) International Application No :PCT/EP2014/056880
Filing Date :04/04/2014
(87) International Publication No :WO 2014/106672
(61) Patent of Addition to Application Number :NA
Filing Date :NA
(62) Divisional to Application Number :NA
Filing Date :NA

(71)**Name of Applicant :**
1)HALDEX BRAKE PRODUCTS AB
Address of Applicant :Box 501 S 26124 Landskrona Sweden
(72)**Name of Inventor :**
1)SANDBERG Stefan

(57) Abstract :
The present invention relates to a brake actuation mechanism for a disc brake comprising an amplification mechanism (A) an adjustment mechanism (B) a thrust element (C) and a return mechanism (D) which are mountable inside a caliper housing by means of a rod (1) so as to be functionally interacting in which the adjustment mechanism (B) comprises a torque limiting clutch mechanism (E) drivingly connecting several elements (8;15) and comprising a first clutch element (13) drivingly connecting a rotatable input element (8) with a rotatable output element (15) and a second clutch element (17) connecting the rotatable output element (15) with the rod (1) the rotatable output element (15) radially surrounding the first clutch element (13) and the second clutch element (17). Furthermore the invention relates to a disc brake comprising such brake actuation mechanism.

No. of Pages : 34 No. of Claims : 18

(12) PATENT APPLICATION PUBLICATION
(19) INDIA
(22) Date of filing of Application :23/09/2016
(21) Application No.201617032627 A
(43) Publication Date : 20/01/2017

(54) Title of the invention : NOVEL PYRAZOLO PYRIMIDINE DERIVATIVES AND THEIR USE AS MALT1 INHIBITORS

(51) International classification :C07D487/04,A61K31/519,A61P29/00
(31) Priority Document No :14170408.0
(32) Priority Date :28/05/2014
(33) Name of priority country :EPO
(86) International Application No :PCT/IB2015/053975
Filing Date :27/05/2015
(87) International Publication No :WO 2015/181747
(61) Patent of Addition to Application Number :NA
Filing Date :NA
(62) Divisional to Application Number :NA
Filing Date :NA

(71)**Name of Applicant :**
1)NOVARTIS AG
Address of Applicant :Lichtstrasse 35 CH 4056 Basel Switzerland
(72)**Name of Inventor :**
1)PISSOT SOLDERMANN Carole
2)QUANCARD Jean
3)SCHLAPBACH Achim
4)SIMIC Oliver
5)TINTELNOT BLOMLEY Marina
6)ZOLLER Thomas

(57) Abstract :
The present invention describes new pyrazolo pyrimidine derivatives of formula (I) or a pharmaceutically acceptable salt thereof; (I) wherein R1 is halogen cyano or C Calkyl optionally substituted by halogen; R2 is C Calkyl optionally substituted one or more times by C Calkyl C Calkenyl hydroxyl N N di C Calkyl amino N mono C Calkyl amino O Rg Rg phenyl or by C Calkoxy wherein said alkoxy again may optionally be substituted by C Calkoxy N N di C Calkyl amino Rg or phenyl; C Ccycloalkyl optionally substituted by C Calkyl N N di C Calkyl amino or C Calkoxy C Calkyl and/or two of said optional substituents together with the atoms to which they are bound may form an annulated or spirocyclic 4 6 membered saturated heterocyclic ring comprising 1 2 O atoms; phenyl optionally substituted by C Calkoxy; a 5 6 membered heteroaryl ring having 1 to 3 heteroatoms selected from N and O said ring being optionally substituted by C Calkyl which may be optionally substituted by amino or hydroxy; Rg; or N N di C Calkyl amino carbonyl; and R is phenyl independently substituted two or more times by Ra 2 pyridyl independently substituted one or more times by Rb 3 pyridyl independently substituted one or more times by Rc or 4 pyridyl independently substituted one or more times by Rd; which are generally interacting with MALT1 proteolytic and/or autoproteolytic activity and in particular which may inhibit said activity. The present invention further describes the synthesis of said new pyrazolo pyrimidine derivatives their use as a medicament especially by interacting with MALT1 proteolytic and/or autoproteolytic activity.

No. of Pages : 144 No. of Claims : 15

(12) PATENT APPLICATION PUBLICATION
(21) Application No.201617032206 A
(19) INDIA
(22) Date of filing of Application :21/09/2016
(43) Publication Date : 20/01/2017

(54) Title of the invention : SYSTEM COMPRISING AN ACCUMULATOR UPSTREAM OF A LOST MOTION COMPONENT IN A VALVE BRIDGE

(51) International classification :F01L13/00,F01L9/02,F01L1/18
(31) Priority Document No :62/024629
(32) Priority Date :15/07/2014
(33) Name of priority country :U.S.A.
(86) International Application No :PCT/US2015/040502
Filing Date :15/07/2015
(87) International Publication No :WO 2016/011113
(61) Patent of Addition to Application Number :NA
Filing Date :NA
(62) Divisional to Application Number :NA
Filing Date :NA

(71)**Name of Applicant :**
1)JACOBS VEHICLE SYSTEMS INC.
Address of Applicant :22 East Dudley Town Road Bloomfield Connecticut 06002 U.S.A.
(72)**Name of Inventor :**
1)BALTRUCKI Justin
2)GRON G. Michael
3)LU Biao

(57) Abstract :
Systems for actuating at least two engine valves comprise a valve bridge operatively connected to the at least two engine valves and having a hydraulically actuated lost motion component. The lost motion component comprises a lost motion check valve disposed therein. A rocker arm has a motion receiving end configured to receive valve actuation motions from a valve actuation motion source and a motion imparting end for conveying the valve actuation motions and hydraulic fluid to the lost motion component. The rocker arm is in fluid communication with a hydraulic fluid supply. The systems also comprise an accumulator in fluid communication with the hydraulic fluid supply and disposed upstream of the lost motion check valve. In all embodiments a fluid supply check valve may be disposed upstream of the accumulator and configured to prevent flow of hydraulic fluid from the accumulator back to the hydraulic fluid supply.

No. of Pages : 18 No. of Claims : 10

(12) PATENT APPLICATION PUBLICATION
(21) Application No.201617032207 A
(19) INDIA
(22) Date of filing of Application :21/09/2016
(43) Publication Date : 20/01/2017

(54) Title of the invention : PLATED STEEL SHEET CONTAINING QUASICRYSTAL

(51) International classification :C23C2/06,C22C18/04,C22C23/04
(31) Priority Document No :NA
(32) Priority Date :NA
(33) Name of priority country :NA
(86) International Application No :PCT/JP2014/059103
Filing Date :28/03/2014
(87) International Publication No :WO 2015/145721
(61) Patent of Addition to Application Number :NA
Filing Date :NA
(62) Divisional to Application Number :NA
Filing Date :NA

(71)**Name of Applicant :**
1)NIPPON STEEL & SUMITOMO METAL CORPORATION
Address of Applicant :6 1 Marunouchi 2 chome Chiyoda ku Tokyo 1008071 Japan
(72)**Name of Inventor :**
1)TOKUDA Kohei

(57) Abstract :
This plated steel sheet containing a quasicrystal is provided with a steel sheet and a metal coating layer disposed at the surface of the steel sheet. The chemical components of the metal coating layer include Mg Zn and Al and in at% 25% = Zn + Al is satisfied. The metal structure of the metal coating layer contains quasicrystals and the magnesium content zinc content and aluminum content in the quasicrystal phase in at% satisfy 0.5 = Mg/(Zn+Al) = 0.93. Also the average circle equivalent diameter of the quasicrystal phase is 1 µm (exclusive) to 200 µm.

No. of Pages : 115 No. of Claims : 12

(12) PATENT APPLICATION PUBLICATION
(19) INDIA
(22) Date of filing of Application :21/09/2016

(21) Application No.201617032215 A
(43) Publication Date : 20/01/2017

(54) Title of the invention : INSULIN LIKE GROWTH FACTOR 1 RECEPTOR SPECIFIC ANTIBODIES AND USES THEREOF

(51) International classification	:C07K16/28,A61K39/395,A61K49/00
(31) Priority Document No	:61/948818
(32) Priority Date	:06/03/2014
(33) Name of priority country	:U.S.A.
(86) International Application No	:PCT/CA2014/000861
Filing Date	:04/12/2014
(87) International Publication No	:WO 2015/131257
(61) Patent of Addition to Application Number	:NA
Filing Date	:NA
(62) Divisional to Application Number	:NA
Filing Date	:NA

(71)**Name of Applicant :**
1)NATIONAL RESEARCH COUNCIL OF CANADA
Address of Applicant :1200 Montreal Road Ottawa Ontario K1A 0R6 Canada
(72)**Name of Inventor :**
1)STANIMIROVIC Danica
2)KEMMERICH Kristin
3)HAQQANI Arsalan S.
4)SULEA Traian
5)ARBABI GHAHROUDI Mehdi
6)MASSIE Bernard
7)GILBERT Rnald

(57) Abstract :
The blood brain barrier (BBB) prevents transport of molecules larger than 500 Dal tons from blood to brain. Receptor mediated transcytosis (RMT) facilitates transport across the BBB of specific molecules that bind receptors on brain endothelial cells that form the BBB. An insulin like growth factor 1 receptor (IGF lR) binding antibody or fragment thereof is identified that transmigrates the BBB by RMT. The antibody or fragment is used to deliver a cargo molecule across the BBB wherein the cargo molecule may be a therapeutic or detectable agent. The antibody is a camelid VHH prepared by immunizing a llama with a 933 amino acid IGF 1R polypeptide. Humanized forms of the camelid VHH are also generated.

No. of Pages : 54 No. of Claims : 28

(12) PATENT APPLICATION PUBLICATION
(21) Application No.201617032223 A
(19) INDIA
(22) Date of filing of Application :21/09/2016
(43) Publication Date : 20/01/2017

(54) Title of the invention : WAVE ENERGY PLANT HAVING OFFSET FLOATS

(51) International classification :F03B13/20
(31) Priority Document No :14 51557
(32) Priority Date :26/02/2014
(33) Name of priority country :France
(86) International Application No :PCT/FR2015/050461
Filing Date :26/02/2015
(87) International Publication No :WO 2015/128586
(61) Patent of Addition to Application Number :NA
Filing Date :NA
(62) Divisional to Application Number :NA
Filing Date :NA

(71)**Name of Applicant :**
1)WAVES RUIZ
Address of Applicant :24ter Route de Saint Barthelemy F 76930 Octeville Sur Mer France
(72)**Name of Inventor :**
1)RUIZ DIEZ Jos Antonio

(57) Abstract :
The invention relates to a wave energy plant (1) that includes: a semi submersible platform (2) provided with at least one longitudinal casing (4) that extends from a bow (7) to a stern (8) of the platform (2); and a wave energy machine (3) mounted on the platform (2). The machine (3) comprises: a gantry (17) transversely mounted on the casing (4) on the bow of the platform (2); floats (18 19) arranged so as to enable the wave energy to be converted into mechanical energy i.e. at least one primary float (18) and at least one secondary float (19) longitudinally offset relative to the primary float (18); and a transformer (34). The platform (2) comprises at least one stabilizer aileron (12) extending transversely within the lower edges (10) of the casings (4) of the platform (2).

No. of Pages : 14 No. of Claims : 11

(12) PATENT APPLICATION PUBLICATION
(19) INDIA
(22) Date of filing of Application :22/09/2016
(21) Application No.201617032391 A
(43) Publication Date : 20/01/2017

(54) Title of the invention : METHODS OF MANUFACTURE OF SALTS OF HYDROXY SUBSTITUTED AROMATIC COMPOUNDS AND POLYETHERIMIDES

(51) International classification :C07C37/66,C07C39/235,C08K5/31
(31) Priority Document No :61/979810
(32) Priority Date :15/04/2014
(33) Name of priority country :U.S.A.
(86) International Application No :PCT/US2015/025943
Filing Date :15/04/2015
(87) International Publication No :WO 2015/160929
(61) Patent of Addition to Application Number :NA
Filing Date :NA
(62) Divisional to Application Number :NA
Filing Date :NA

(71)**Name of Applicant :**
1)SABIC GLOBAL TECHNOLOGIES B.V.
Address of Applicant :Plasticslaan 1 NL 4612 PX Bergen op Zoom Netherlands
(72)**Name of Inventor :**
1)CHAULAGAIN Mani Raj

(57) Abstract :
A method for the manufacture of a metal salt of a hydroxy substituted aromatic compound comprises: contacting a hydroxy substituted aromatic compound with a base comprising a metal cation in molten diphenyl sulfone or sulfolane to provide a mixture comprising water diphenyl sulfone or sulfolane and a metal salt of the hydroxy substituted aromatic compound; and removing water from the mixture in the absence of an azeotrope solvent to provide the metal salt of the hydroxy substituted aromatic compound that contains less than 3 000 ppm of water.

No. of Pages : 18 No. of Claims : 19

(12) PATENT APPLICATION PUBLICATION
(21) Application No.201617032395 A
(19) INDIA
(22) Date of filing of Application :22/09/2016
(43) Publication Date : 20/01/2017

(54) Title of the invention : CAR WITH ROTATABLY MOUNTED WHEEL AXLE FOR A FAIRGROUND RIDE AND METHOD FOR CONTROLLING A ROTATABLY MOUNTED WHEEL AXLE OF SUCH A CAR

(51) International classification :A63G7/00,A63G21/00
(31) Priority Document No :10 2014 104 636.6
(32) Priority Date :02/04/2014
(33) Name of priority country :Germany
(86) International Application No :PCT/EP2015/056312
Filing Date :24/03/2015
(87) International Publication No :WO 2015/150172
(61) Patent of Addition to Application Number :NA
Filing Date :NA
(62) Divisional to Application Number :NA
Filing Date :NA

(71)**Name of Applicant :**
1)MACK RIDES GMBH & CO. KG
Address of Applicant :Mauermattenstr. 4 79183 Waldkirch Germany
(72)**Name of Inventor :**
1)KRAUS Michael

(57) Abstract :
Disclosed is a car (110) for a fairground ride (100) with at least one wheel axle arranged on a rotatable carrier structure (117) and a coupling element (120) for coupling a further car (150) wherein the coupling element (120) for coupling a further car (150) is movably mounted and is connected to the rotatable carrier structure (117) via a mechanical operative connection (130) so that a movement of the coupling element (120) leads to a rotation of the rotatable carrier structure (117) and of the wheel axle arranged thereon and a rotation of the rotatable carrier structure (117) leads to a movement of the coupling element (120) and a method for controlling the rotation of a rotatably mounted carrier structure (117) of a wheel axle of a car (110) of a fairground ride (100) with a movably mounted coupling element (120) for coupling a further car (150) wherein a position change caused by the track geometry of the relative position of the car (110) of the fairground ride (100) in relation to the other car (150) is translated into a position change of the movably mounted coupling element (120) and the position change of the movably mounted coupling element (120) is transferred via a mechanical operative connection (130) to a rotation of the rotatable carrier structure (117).

No. of Pages : 15 No. of Claims : 5

(12) PATENT APPLICATION PUBLICATION
(19) INDIA
(22) Date of filing of Application :22/09/2016
(21) Application No.201617032396 A
(43) Publication Date : 20/01/2017

(54) Title of the invention : TECHNIQUE FOR SETTING ENERGY RELATED LASER PULSE PARAMETERS

(51) International classification :A61F9/008
(31) Priority Document No :NA
(32) Priority Date :NA
(33) Name of priority country :NA
(86) International Application No :PCT/EP2014/060565
Filing Date :22/05/2014
(87) International Publication No :WO 2015/176759
(61) Patent of Addition to Application Number :NA
Filing Date :NA
(62) Divisional to Application Number :NA
Filing Date :NA

(71)**Name of Applicant :**
1)WAVELIGHT GMBH
Address of Applicant :Am Wolfsmantel 5 91058 Erlangen Germany
(72)**Name of Inventor :**
1)FOESEL Matthias
2)DONITZKY Christof
3)VOGLER Klaus
4)KITTELMANN Olaf

(57) Abstract :
A method for energy setting of pulsed focused laser radiation is provided. In the method a relationship between a threshold pulse energy required for causing irreversible damage in a material and a pulse duration is established. The relationship allows to obtain a threshold pulse energy for each of a plurality of pulse durations including one or more pulse durations in a range between 200 fs and smaller. The relationship defines a decreasing threshold pulse energy for a decreasing pulse duration in the range between 200 fs and smaller. For a given pulse duration in the range between 200 fs and smaller an associated threshold pulse energy is determined based on the established relationship. The pulse energy of the laser radiation is set based on the determined associated threshold pulse energy. In certain embodiments the relationship represents a decrease of the threshold pulse energy substantially as a function of the cubic root of the pulse duration.

No. of Pages : 13 No. of Claims : 25

(12) PATENT APPLICATION PUBLICATION
(19) INDIA
(22) Date of filing of Application :22/09/2016
(21) Application No.201617032397 A
(43) Publication Date : 20/01/2017

(54) Title of the invention : A METHOD AND SYSTEM FOR NETWORK FUNCTION PLACEMENT

(51) International classification :H04L12/24,G06F9/50
(31) Priority Document No :61/978448
(32) Priority Date :11/04/2014
(33) Name of priority country :U.S.A.
(86) International Application No :PCT/IB2015/051999
Filing Date :18/03/2015
(87) International Publication No :WO 2015/155616
(61) Patent of Addition to Application Number :NA
Filing Date :NA
(62) Divisional to Application Number :NA
Filing Date :NA

(71)**Name of Applicant :**
1)TELEFONAKTIEBOLAGET LM ERICSSON (PUBL)
Address of Applicant :S 164 83 Stockholm Sweden
(72)**Name of Inventor :**
1)XIA Ming
2)SHIRAZIPOUR Meral
3)ZHANG Ying

(57) Abstract :
A method implemented for network function placement is disclosed. The method optimizes network function placement for each traffic flow to minimize the overall inter pod traffic volume. For each traffic flow going through a data center the method initiates a pod list. The network functions of the traffic flow is sorted in a descending order by resource demanded. Then one network function is selected one at a time according to the descending order. For each network function the pods in the pod list is sorted in an ascending order by resource available in each pod. The method selects a first pod for the network function when possible. When no pod in the pod list has enough resource for the network function the method adds a pod with the most available resource from a pod pool to the pod list and selects the added pod for the network function.

No. of Pages : 33 No. of Claims : 21

(12) PATENT APPLICATION PUBLICATION
(19) INDIA
(22) Date of filing of Application :22/09/2016
(21) Application No.201617032398 A
(43) Publication Date : 20/01/2017

(54) Title of the invention : POLYMERS AND THE USE THEREOF AS LUBRICATING AGENTS IN THE PRODUCTION OF ALKALI METAL FILMS

(51) International classification	:C10M107/42,B21B1/40,B21B33/00
(31) Priority Document No	:61/973493
(32) Priority Date	:01/04/2014
(33) Name of priority country	:U.S.A.
(86) International Application No	:PCT/CA2015/050256
Filing Date	:31/03/2015
(87) International Publication No	:WO 2015/149173
(61) Patent of Addition to Application Number	:NA
Filing Date	:NA
(62) Divisional to Application Number	:NA
Filing Date	:NA

(71)**Name of Applicant :**
1)HYDRO QU‰BEC
Address of Applicant :75 Boul. Ren Lvesque Ouest Montral Qubec H2Z 1A4 Canada
(72)**Name of Inventor :**
1)ZAGHIB Karim
2)ARMAND Michel
3)BOUCHARD Patrick
4)VERREAULT Serge
5)HAMEL P,QUET Julie
6)GIRARD Gabriel

(57) Abstract :
The present invention relates to polymers used as rolling lubricating agents to compositions comprising said polymers and to alkali metal films including the polymers or compositions on the surface(s) thereof. The use of said polymers and compositions is also described for strip rolling alkali metals or alloys thereof in order to obtain thin films. Methods for producing said thin films which are suitable for use in electrochemical cells are also described. The present invention proposes an improved lubricant according to formula I which for example achieves enhanced conductivity and/or enables the production of electrochemical cells having an improved life span in cycles.

No. of Pages : 25 No. of Claims : 51

(12) PATENT APPLICATION PUBLICATION
(21) Application No.201617032399 A
(19) INDIA
(22) Date of filing of Application :22/09/2016
(43) Publication Date : 20/01/2017

(54) Title of the invention : METHOD AND APPARATUS FOR MONITORING THE TEMPERATURE OF THE COIL WIRE OF A SOLENOID VALVE

(51) International classification :F02D41/20,G01K7/18
(31) Priority Document No :10 2014 206 353.1
(32) Priority Date :03/04/2014
(33) Name of priority country :Germany
(86) International Application No :PCT/EP2015/055207
Filing Date :12/03/2015
(87) International Publication No :WO 2015/150049
(61) Patent of Addition to Application Number :NA
Filing Date :NA
(62) Divisional to Application Number :NA
Filing Date :NA

(71)**Name of Applicant :**
1)CONTINENTAL AUTOMOTIVE GMBH
Address of Applicant :Vahrenwalder Strae 9 30165 Hannover Germany
(72)**Name of Inventor :**
1)KRGER Thomas
2)KOGAN Dmitriy
3)BODENSTEINER Andreas

(57) Abstract :
The invention relates to a method and to an apparatus for monitoring the temperature of the coil wire of a solenoid valve. An actuation signal which has actuation intervals which follow one another is used in this case wherein a start pulse which causes an increase in current in the coil wire of the magnet coil and has a prespecified pulse duration and a pulse sequence which follows the start pulse and has a duty cycle are provided in each actuation interval. The current intensity of the current flowing through the coil wire of the solenoid valve is measured at two different times during the increase in current and the current gradient is subsequently calculated from the measured current intensities. A prespecified threshold value for the current gradient is then compared with the calculated current gradient. If the calculated current gradient is lower than the prespecified current gradient the current flowing through the coil wire is reduced in order to prevent overheating of the coil wire of the solenoid valve.

No. of Pages : 9 No. of Claims : 7

(12) PATENT APPLICATION PUBLICATION
(21) Application No.201617032400 A
(19) INDIA
(22) Date of filing of Application :22/09/2016
(43) Publication Date : 20/01/2017

(54) Title of the invention : SENSOR DEVICE FOR DETECTING A CHANGE IN A MAGNETIC FIELD AND TRACK BOUND TRANSPORTATION SYSTEM HAVING AT LEAST ONE SUCH SENSOR DEVICE

(51) International classification :B61L1/16
(31) Priority Document No :10 2014 207 409.6
(32) Priority Date :17/04/2014
(33) Name of priority country :Germany
(86) International Application No :PCT/EP2015/056917
Filing Date :30/03/2015
(87) International Publication No :WO 2015/158538
(61) Patent of Addition to Application Number :NA
Filing Date :NA
(62) Divisional to Application Number :NA
Filing Date :NA

(71)**Name of Applicant :**
1)SIEMENS AKTIENGESELLSCHAFT
Address of Applicant :Wittelsbacherplatz 2 80333 M¼nchen Germany
(72)**Name of Inventor :**
1)FREISE Rainer

(57) Abstract :
The present invention relates to a particularly efficient sensor device (1) for detecting a change in a magnetic field which change is caused by an object approaching the sensor device (1) in a direction of movement (5) or moving past the sensor device (1) in the direction of movement (5). The sensor device (1) according to the invention has two sensor units (10 20) wherein each of the sensor units (10 20) comprises two receiver coils (12 13; 22 23) and an alternating current fed transmitter coil (11; 21) which is arranged between the receiver coils (12 13; 22 23) with respect to the direction of movement (5) wherein the longitudinal axes (12a 13a; 22a 23a) of the receiver coils (12 13; 22 23) of the two sensor units (10 20) are oriented essentially perpendicularly with respect to the direction of movement (5) wherein the longitudinal axes (11a; 21a) of the transmitter coils (11; 21) of the two sensor units (10 20) are oriented essentially parallel to the direction of movement (5) wherein the transmitter coils (11; 21) of the two sensor units (10 20) are arranged one behind the other with respect to the direction of movement (5) and wherein the sensor device (1) is embodied in such a way that the transmitter coils (11; 21) of the two sensor units (10 20) generate magnetic fluxes (60 70) which are opposed to one another. The invention also relates to a track bound transportation system having at least one sensor device (1) according to the invention.

No. of Pages : 18 No. of Claims : 15

(12) PATENT APPLICATION PUBLICATION
(19) INDIA
(22) Date of filing of Application :23/09/2016
(21) Application No.201617032632 A
(43) Publication Date : 20/01/2017

(54) Title of the invention : DISC BRAKE AND BRAKE ACTUATION MECHANISM FOR A DISC BRAKE

(51) International classification :F16D55/227,F16D65/56
(31) Priority Document No :20 2014 002 459.6
(32) Priority Date :19/03/2014
(33) Name of priority country :Germany
(86) International Application No :PCT/EP2015/055714
Filing Date :18/03/2015
(87) International Publication No :WO 2015/140225
(61) Patent of Addition to Application Number :NA
Filing Date :NA
(62) Divisional to Application Number :NA
Filing Date :NA

(71)**Name of Applicant :**
1)HALDEX BRAKE PRODUCTS AB
Address of Applicant :Box 501 S 261 24 Landskrona Sweden
(72)**Name of Inventor :**
1)SANDBERG Stefan

(57) Abstract :
A disc brake comprising a brake caliper and a brake actuation mechanism (1) having an amplification mechanism for introducing a clamping force an adjustment mechanism for compensating a lining wear having a torque clutch a thrust element for transmitting the clamping force onto the brake disc wherein the thrust element comprises an adjustment spindle (28) and a return mechanism wherein the amplification mechanism the adjustment mechanism the thrust element and the return mechanism are mounted in a functional interacting manner in the brake caliper by means of a rod (2) and at least one device (35 41) which is configured to exert a defined resistant torque on the rotation of the adjustment spindle (38).

No. of Pages : 26 No. of Claims : 23

(12) PATENT APPLICATION PUBLICATION
(19) INDIA
(22) Date of filing of Application :23/09/2016
(21) Application No.201617032634 A
(43) Publication Date : 20/01/2017

(54) Title of the invention : PARTICLE REMOVAL FROM ELECTROCHROMIC FILMS USING NON AQUEOUS FLUIDS

(51) International classification :G02F1/15
(31) Priority Document No :14/198824
(32) Priority Date :06/03/2014
(33) Name of priority country :U.S.A.
(86) International Application No :PCT/US2015/018980
Filing Date :05/03/2015
(87) International Publication No :WO 2015/134756
(61) Patent of Addition to Application Number :NA
Filing Date :NA
(62) Divisional to Application Number :NA
Filing Date :NA

(71)**Name of Applicant :**
1)SAGE ELECTROCHROMICS INC.
Address of Applicant :One Sage Way Faribault Minnesota 55021 U.S.A.
(72)**Name of Inventor :**
1)KALWEIT Harvey
2)AJJARAPU Satya
3)GIRON Jean Christophe

(57) Abstract :
Several of the films that comprise various energy producing or control devices for example electrochromic devices lithium batteries and photovoltaic cells are sensitive to moisture in some way. They may be especially vulnerable to moisture at particular stages during their fabrication. It may also be highly desirable during fabrication to be able to wash particulates from the surface. The particulates may be generated some aspect of the fabrication process or they may arise from the environment in which the fabrication takes place. This concepts described herein illustrate ways to remove the particles from the surface without incurring the damage associated with typical washing processes resulting in higher manufacturing yields and better device performance.

No. of Pages : 20 No. of Claims : 15

(12) PATENT APPLICATION PUBLICATION
(21) Application No.201617032640 A
(19) INDIA
(22) Date of filing of Application :23/09/2016
(43) Publication Date : 20/01/2017

(54) Title of the invention : TRANSMISSION OF BEACON MESSAGE

(51) International classification :H04M1/66,H04W4/12
(31) Priority Document No :201410136738.0
(32) Priority Date :04/04/2014
(33) Name of priority country :China
(86) International Application No :PCT/US2015/023395
Filing Date :30/03/2015
(87) International Publication No :WO 2015/153489
(61) Patent of Addition to Application Number :NA
Filing Date :NA
(62) Divisional to Application Number :NA
Filing Date :NA

(71)**Name of Applicant :**
1)ALIBABA GROUP HOLDING LIMITED
Address of Applicant :Fourth Floor One Capital Place P.O. Box 847 Grand Cayman Cayman Island
(72)**Name of Inventor :**
1)QIN Jian

(57) Abstract :
Methods and systems of transmitting a beacon message. Implementations of the present disclosure include determining by a computing device based on a predetermined algorithm an encryption method using a current time as a parameter. The computing device may encrypt a beacon message using the determined encryption method to obtain an encrypted beacon message. The computing device may further generate a radio frame including the encrypted beacon message and information associated with a decryption computing device and transmit the radio frame to a mobile device. Implementations of this present disclosure avoid leaking users sensitive information and therefore protect users privacy as well as improve safe uses of beacon transmission.

No. of Pages : 14 No. of Claims : 20

(12) PATENT APPLICATION PUBLICATION
(19) INDIA
(22) Date of filing of Application :23/09/2016
(21) Application No.201617032641 A
(43) Publication Date : 20/01/2017

(54) Title of the invention : ENHANCED PRODUCTION OF RECOMBINANT CRM197 IN E. COLI

(51) International classification :A61K45/00,C07H21/04,C12N15/00
(31) Priority Document No :61/947234
(32) Priority Date :03/03/2014
(33) Name of priority country :U.S.A.
(86) International Application No :PCT/US2015/018338
Filing Date :02/03/2015
(87) International Publication No :WO 2015/134402
(61) Patent of Addition to Application Number :NA
Filing Date :NA
(62) Divisional to Application Number :NA
Filing Date :NA

(71)**Name of Applicant :**
1)SCARAB GENOMICS LLC
Address of Applicant :1202 Ann Street Madisoin WI 53713 U.S.A.
(72)**Name of Inventor :**
1)BLATTNER Cristopher R.
2)FRISCH David A.
3)NOVY Robert E.
4)HENKER Terrance M.
5)STEFFEN Eric A.
6)BLATTNER Frederick R.
7)CHOI Hyunsic
8)POSFAI Gyorgy
9)LANDRY Charles F.

(57) Abstract :
Rediced genome or native K12 strain bacteria comprising expression vectors encoding a recombinant CRM197 protein and their use in the production of CRM 197 is provided. The CRM 197 protein may be fused to a signal sequence that directs the expressed CRM197 protein to the periplasm of the host.

No. of Pages : 52 No. of Claims : 36

(12) PATENT APPLICATION PUBLICATION
(21) Application No.201617032642 A
(19) INDIA
(22) Date of filing of Application :23/09/2016
(43) Publication Date : 20/01/2017

(54) Title of the invention : FOLDABLE CUP

(51) International classification :A47G19/22
(31) Priority Document No :1020140021065
(32) Priority Date :24/02/2014
(33) Name of priority country :Republic of Korea
(86) International Application No :PCT/KR2014/001772
Filing Date :04/03/2014
(87) International Publication No :WO 2015/125994
(61) Patent of Addition to Application Number :NA
Filing Date :NA
(62) Divisional to Application Number :NA
Filing Date :NA

(71)**Name of Applicant :**
1)CHO Yeahyun
Address of Applicant :45 Geonneonmal gil Geumsa myeon Yeoju si Gyeonggi do 12602 Republic of Korea
(72)**Name of Inventor :**
1)PARK Su bok

(57) Abstract :
The present invention relates to a foldable cup comprising: a front side having at least one support axial line which is bent in a circumferential direction of the cup and formed to support weight in a vertical direction; a rear side of which both ends are connected so as to face the front side and having at least one support axial line bent in the circumferential direction of the cup and formed to support the weight in the vertical direction; and a bottom side foldable in a six shaped structure of which each end portion of the bottom side is connected to the lower ends of the front side and the rear side wherein the bottom side includes: a folding line divided into two parts so as to be foldable between the front side and the rear side; a main axial line crossing the folding line in a diagonal direction and bent inwards and outwards so as to support the bottom weight; and a plurality of support axial lines connected between two vertices respectively positioned at both end portions of the bottom side and meeting the folding line and other vertices adjacent to each of the two vertices and the main axial line is connected to at least one of the support axial lines on the side of each vertex meeting the folding line in order to disperse weight thereby facilitating the dispersion of the weight of the contents so as to maintain the original shape of the cup for a longer time.

No. of Pages : 11 No. of Claims : 12

(12) PATENT APPLICATION PUBLICATION
(21) Application No.201617032229 A
(19) INDIA
(22) Date of filing of Application :21/09/2016
(43) Publication Date : 20/01/2017

(54) Title of the invention : SINTERED BODY AND CUTTING TOOL

(51) International classification	:C04B35/583,B23B27/14,B23B27/20
(31) Priority Document No	:2015037062
(32) Priority Date	:26/02/2015
(33) Name of priority country	:Japan
(86) International Application No	:PCT/JP2016/054394
Filing Date	:16/02/2016
(87) International Publication No	:WO 2016/136532
(61) Patent of Addition to Application Number	:NA
Filing Date	:NA
(62) Divisional to Application Number	:NA
Filing Date	:NA

(71)**Name of Applicant :**
1)SUMITOMO ELECTRIC INDUSTRIES LTD.
Address of Applicant :5 33 Kitahama 4 chome Chuo ku Osaka shi Osaka 5410041 Japan
(72)**Name of Inventor :**
1)CHIHARA Kentaro
2)KUKINO Satoru

(57) Abstract :
Provided is a sintered body that contains cubic boron nitride particles as hard phase particles that has a thermal conductivity of 15 to 40 W·m·K-1nclusive and that is for use in the cutting of a nickel based heat resistant alloy formed from fine crystal grains having a grain size number of more than 5 as defined by the ASTM standard E1 12-13. Also provided is a cutting tool that comprises the sintered body. The present invention thus provides a sintered body having both high wear resistance and high defect resistance and a cutting tool comprising this sintered body.

No. of Pages : 34 No. of Claims : 10

(12) PATENT APPLICATION PUBLICATION
(19) INDIA
(22) Date of filing of Application :21/09/2016
(21) Application No.201617032230 A
(43) Publication Date : 20/01/2017

(54) Title of the invention : COLLAPSIBLE SAFETY BARRIER AND SUPPORT POST

(51) International classification :E04G21/32,E01F13/00,E04H17/14
(31) Priority Document No :61/969915
(32) Priority Date :25/03/2014
(33) Name of priority country :U.S.A.
(86) International Application No :PCT/CA2015/050225
Filing Date :23/03/2015
(87) International Publication No :WO 2015/143555
(61) Patent of Addition to Application Number :NA
Filing Date :NA
(62) Divisional to Application Number :NA
Filing Date :NA

(71)**Name of Applicant :**
1)MELIC Jonathan Jonny
Address of Applicant :30 Thorndyke Crescent Whitby Ontario L1M 1G4 Canada
(72)**Name of Inventor :**
1)MELIC Jonathan Jonny

(57) Abstract :
A collapsible safety barrier and support post for releasably securing between a ceiling structure and a floor structure. The safety barrier and support post comprises a plurality of longitudinal rails hingedly secured to a first end post and to a second end post an extension rail releasably engageable with the second end post and a latching mechanism to releasably secure the extension rail to the second end post. The safety barrier has a deployed position and a collapsed position. When in its deployed position the barrier is secured between a floor and a ceiling structure. When in its collapsed position the longitudinal rails the first and second end posts and the extension rail are positioned generally parallel and adjacent to one another.

No. of Pages : 35 No. of Claims : 30

(12) PATENT APPLICATION PUBLICATION
(19) INDIA
(22) Date of filing of Application :21/09/2016
(21) Application No.201617032234 A
(43) Publication Date : 20/01/2017

(54) Title of the invention : SINTERED BODY AND CUTTING TOOL

(51) International classification :C04B35/583,B23B27/14,B23B27/20
(31) Priority Document No :2015037074
(32) Priority Date :26/02/2015
(33) Name of priority country :Japan
(86) International Application No :PCT/JP2016/054393
Filing Date :16/02/2016
(87) International Publication No :WO 2016/136531
(61) Patent of Addition to Application Number :NA
Filing Date :NA
(62) Divisional to Application Number :NA
Filing Date :NA

(71)**Name of Applicant :**
1)SUMITOMO ELECTRIC INDUSTRIES LTD.
Address of Applicant :5 33 Kitahama 4 chome Chuo ku Osaka shi Osaka 5410041 Japan
(72)**Name of Inventor :**
1)CHIHARA Kentaro
2)KUKINO Satoru

(57) Abstract :
Provided is a sintered body that contains cubic boron nitride particles as hard phase particles that has a thermal conductivity of less than 20 W·m·K and that is for use in the cutting of a nickel based heat resistant alloy formed from coarse crystal grains having a grain size number of 5 or less as defined by the ASTM standard E112 13. Also provided is a cutting tool that comprises the sintered body. The present invention thus provides a sintered body having high wear resistance and high defect resistance and a cutting tool comprising this sintered body.

No. of Pages : 34 No. of Claims : 10

(12) PATENT APPLICATION PUBLICATION
(19) INDIA
(22) Date of filing of Application :21/09/2016
(21) Application No.201617032239 A
(43) Publication Date : 20/01/2017

(54) Title of the invention : THERAPEUTIC NANOPARTICLES COMPRISING A THERAPEUTIC AGENT AND METHODS OF MAKING AND USING SAME

(51) International classification	:A61K47/12,A61K47/28,A61K47/34
(31) Priority Document No	:61/953628
(32) Priority Date	:14/03/2014
(33) Name of priority country	:U.S.A.
(86) International Application No	:PCT/US2015/020343
Filing Date	:13/03/2015
(87) International Publication No	:WO 2015/138835
(61) Patent of Addition to Application Number	:NA
Filing Date	:NA
(62) Divisional to Application Number	:NA
Filing Date	:NA

(71)**Name of Applicant :**
1)PFIZER INC.
Address of Applicant :235 East 42nd Street New York NY 10017 U.S.A.
(72)**Name of Inventor :**
1)BAGRODIA Shubha
2)LAFONTAINE Jennifer
3)LOVATT Zach
4)SHIN Eyoung
5)SONG Young Ho
6)TROIANO Greg
7)WANG Hong

(57) Abstract :
The present disclosure generally relates to nanoparticles comprising a substantially hydrophobic acid and a therapeutic agent (1 (4 {[4 (dimethylamino)piperidin 1 yl]carbonyl}phenyl) 3 [4 (4 6 dimorpholin 4 yl 1 3 5 triazin 2 yl)phenyl]urea) or pharmaceutically acceptable salts thereof and a polymer. Other aspects include methods of making and using such nanoparticles.

No. of Pages : 128 No. of Claims : 129

(12) PATENT APPLICATION PUBLICATION
(19) INDIA
(22) Date of filing of Application :21/09/2016
(21) Application No.201617032250 A
(43) Publication Date : 20/01/2017

(54) Title of the invention : POWER MANAGEMENT THROUGH SEGMENTED CIRCUIT AND VARIABLE VOLTAGE PROTECTION

(51) International classification	:A61B17/072,A61B17/00,A61B17/29
(31) Priority Document No	:14/226076
(32) Priority Date	:26/03/2014
(33) Name of priority country	:U.S.A.
(86) International Application No	:PCT/US2015/020095
Filing Date	:12/03/2015
(87) International Publication No	:WO 2015/148138
(61) Patent of Addition to Application Number	:NA
Filing Date	:NA
(62) Divisional to Application Number	:NA
Filing Date	:NA

(71)**Name of Applicant :**
1)ETHICON ENDO SURGERY INC.
Address of Applicant :4545 Creek Road Cincinnati Ohio 45242 U.S.A.
(72)**Name of Inventor :**
1)LEIMBACK Richard L.
2)ADAMS Shane R.
3)OVERMYER Mark D.
4)SWENSGARD Brett E.
5)SHELTON Frederick E. IV
6)HOUSER Kevin L.

(57) Abstract :
The present disclosure provides a surgical instrument control circuit. The control circuit includes a primary processor a safety processor and a segmented circuit. The segmented circuit includes a plurality of circuit segments in signal communication with the primary processor. The plurality of circuit segments includes a power segment configured to provide a segment voltage to the primary processor the safety processor and each of the plurality of circuit segments. The power segment is configured to provide variable voltage protection of each segment.

No. of Pages : 53 No. of Claims : 20

(12) PATENT APPLICATION PUBLICATION
(19) INDIA
(22) Date of filing of Application :22/09/2016
(21) Application No.201617032401 A
(43) Publication Date : 20/01/2017

(54) Title of the invention : METHOD AND DEVICE FOR OPERATING A PRESSURE RESERVOIR IN PARTICULAR FOR COMMON RAIL INJECTION SYSTEMS IN AUTOMOBILE ENGINEERING

(51) International classification :F02D41/38,F02M59/02,F02M59/36
(31) Priority Document No :10 2014 206 442.2
(32) Priority Date :03/04/2014
(33) Name of priority country :Germany
(86) International Application No :PCT/EP2015/054658
Filing Date :05/03/2015
(87) International Publication No :WO 2015/150016
(61) Patent of Addition to Application Number :NA
Filing Date :NA
(62) Divisional to Application Number :NA
Filing Date :NA

(71)**Name of Applicant :**
1)CONTINENTAL AUTOMOTIVE GMBH
Address of Applicant :Vahrenwalder Strae 9 30165 Hannover Germany
(72)**Name of Inventor :**
1)ANETSBERGER Daniel
2)CHIA Tet Kong Brian
3)SASSLER Walter

(57) Abstract :
The invention relates to a method and to a device for operating a pressure reservoir (1) wherein during a compression phase in a pump chamber (4) a pump (5 18 19 20) periodically increases the pressure of a fluid located therein and by means of a discharge valve (7a 10 12) controlled by differential pressure fluid under high pressure is allowed to be introduced from the pump chamber (4) into the pressure reservoir (1) and wherein during a decompression phase following a compression phase fluid from a fluid reservoir (8) is introduced into the pump chamber (4) by means of a controllable intake valve (6a 9 13). In order to be able also to operate the pressure reservoir (1) without a high pressure measurement directly in the pressure reservoir the fluid pressure in the pressure reservoir according to the invention is ascertained by means of a pressure determination in the pump chamber (4). The pressure determination takes place indirectly for example by monitoring of the intake valve in the decompression phase.

No. of Pages : 22 No. of Claims : 11

(12) PATENT APPLICATION PUBLICATION
(19) INDIA
(22) Date of filing of Application :22/09/2016
(21) Application No.201617032406 A
(43) Publication Date : 20/01/2017

(54) Title of the invention : APPARATUS FOR DOSING A UREA SOLUTION TO A SELECTIVE CATALYTIC REDUCTION (SCR) CATALYST

(51) International classification :F16L53/00,C08G63/64,C08G63/91
(31) Priority Document No :14161301.8
(32) Priority Date :24/03/2014
(33) Name of priority country :EPO
(86) International Application No :PCT/EP2015/055665
Filing Date :18/03/2015
(87) International Publication No :WO 2015/144520
(61) Patent of Addition to Application Number :NA
Filing Date :NA
(62) Divisional to Application Number :NA
Filing Date :NA

(71)**Name of Applicant :**
1)DSM IP ASSETS B.V.
Address of Applicant :Het Overloon 1 NL 6411 TE Heerlen Netherlands
(72)**Name of Inventor :**
1)DUIJSENS Armand Alphons Marie Agnes

(57) Abstract :
Apparatus for dosing a urea solution to a selective catalytic reduction (SCR) catalyst in the exhaust of an internal combustion engine the apparatus comprising an injector for injection of the solution in the exhaust and a tube (1) for transporting the solution to the injector wherein a heating element (2) is in contact with the tube which heating element is a Positive Temperature Coefficient (PTC) heating element comprising at least two parallel wires (4.1 4.2) embedded in a body (3) of a composition which composition comprises a polymer and an electrically conductive filler.

No. of Pages : 10 No. of Claims : 11

(12) PATENT APPLICATION PUBLICATION
(21) Application No.201617032407 A
(19) INDIA
(22) Date of filing of Application :22/09/2016
(43) Publication Date : 20/01/2017

(54) Title of the invention : INFORMATION PROCESSING DEVICE PROJECTOR AND INFORMATION PROCESSING METHOD

(51) International classification :G06F3/041,G03B21/00,G03B21/14
(31) Priority Document No :2014068876
(32) Priority Date :28/03/2014
(33) Name of priority country :Japan
(86) International Application No :PCT/JP2015/001778
Filing Date :27/03/2015
(87) International Publication No :WO 2015/146189
(61) Patent of Addition to Application Number :NA
Filing Date :NA
(62) Divisional to Application Number :NA
Filing Date :NA

(71)**Name of Applicant :**
1)SEIKO EPSON CORPORATION
Address of Applicant :1 6 Shinjuku 4 chome Shinjuku ku Tokyo 1608801 Japan
(72)**Name of Inventor :**
1)KIRYU Akira
2)TONE Takehiko

(57) Abstract :
In order to eliminate problems in a process in accordance with an operation stretching across the inside and outside of a display region in which a projected image is displayed this projector is equipped with: a detection means which repeatedly detects a position indicated by an indicator (30) with respect to a screen (40) (a projection surface on which an image is projected) and which supplies position information for the detected position; and a generation means which when the detection means detects a first position within a primary screen (SC1) which is the display region of the image and then detects a second position outside of the primary screen (SC1) generates position information for a third position which is located between the first position and the second position.

No. of Pages : 45 No. of Claims : 15

(12) PATENT APPLICATION PUBLICATION
(21) Application No.201617032416 A
(19) INDIA
(22) Date of filing of Application :22/09/2016
(43) Publication Date : 20/01/2017

(54) Title of the invention : VEHICLE DRIVING FORCE CONTROL DEVICE

(51) International classification :F16D48/02
(31) Priority Document No :2014092098
(32) Priority Date :25/04/2014
(33) Name of priority country :Japan
(86) International Application No :PCT/JP2015/062503
Filing Date :24/04/2015
(87) International Publication No :WO 2015/163445
(61) Patent of Addition to Application Number :NA
Filing Date :NA
(62) Divisional to Application Number :NA
Filing Date :NA

(71)**Name of Applicant :**
1)AISIN SEIKI KABUSHIKI KAISHA
Address of Applicant :1 Asahi machi 2 chome Kariya shi Aichi 4488650 Japan
(72)**Name of Inventor :**
1)TAMARU Daisuke

(57) Abstract :
The drive force control device according to an embodiment can change reference data stored in a function data storage unit into data characterizing a relationship that expresses the relative relationship between a clutch manipulated variable and a clutch transmission torque. Consequently the reference data is smaller in size than in a case in which the reference data is a map that includes pairs of multiple pieces of data.

No. of Pages : 29 No. of Claims : 9

(12) PATENT APPLICATION PUBLICATION
(21) Application No.201617032644 A
(19) INDIA
(22) Date of filing of Application :23/09/2016
(43) Publication Date : 20/01/2017

(54) Title of the invention : COMPOSITIONS AND METHODS FOR THE REDUCTION OR PREVENTION OF HEPATIC STEATOSIS

(51) International classification :A61P3/04
(31) Priority Document No :61/945412
(32) Priority Date :27/02/2014
(33) Name of priority country :U.S.A.
(86) International Application No :PCT/US2015/018182
Filing Date :27/02/2015
(87) International Publication No :WO 2015/131152
(61) Patent of Addition to Application Number :NA
Filing Date :NA
(62) Divisional to Application Number :NA
Filing Date :NA

(71)**Name of Applicant :**
1)NUSIRT SCIENCES INC.
Address of Applicant :3835 CLEGHORN AVENUE, SUITE 200, NASHVILLE, TENNESSEE 37215, UNITED STATES OF AMERICA U.S.A.
(72)**Name of Inventor :**
1)ZEMEL Michael
2)BRUCKBAUER Antje

(57) Abstract :
Methods useful for reducing or preventing hepatic steatosis are provided herein. Such methods may comprise administering to a subject in need thereof a sirtuin pathway activator and/or PDE5 inhibitor alone or in combination with an amount of a branched amino acid in free amino acid form or a metabolite thereof. Also provided herein are compositions and kits for practicing any of the methods described herein.

No. of Pages : 75 No. of Claims : 73

(12) PATENT APPLICATION PUBLICATION
(19) INDIA
(22) Date of filing of Application :23/09/2016
(21) Application No.201617032655 A
(43) Publication Date : 20/01/2017

(54) Title of the invention : METHOD AND APPARATUS FOR AUTOMATICALLY ADJUSTING INTERFACE ELEMENTS

(51) International classification :G06F3/0481
(31) Priority Document No :201410135821.6
(32) Priority Date :04/04/2014
(33) Name of priority country :China
(86) International Application No :PCT/CN2015/075471
Filing Date :31/03/2015
(87) International Publication No :WO 2015/149679
(61) Patent of Addition to Application Number :NA
Filing Date :NA
(62) Divisional to Application Number :NA
Filing Date :NA

(71)**Name of Applicant :**
1)HUAWEI DEVICE CO. LTD.
Address of Applicant :Building B2 Huawei Industrial Base Bantian Longgang District Shenzhen Guangdong 518129 China
(72)**Name of Inventor :**
1)XU Shun
2)QIAN Peng

(57) Abstract :
Embodiments of the present invention provide a method and apparatus for automatically adjusting interface elements. The method comprises: acquiring an adding operation signal generated by adding a new interface element by a user and determining a position at which the new interface element is to be placed and required space according to the adding operation signal; and when it is determined whether remaining continuous space of a first interface is sufficient for placing the new interface element according to the position at which the new interface element is to be placed and the required space adjusting positions and sizes of interface elements on the first interface according to the position at which the new interface element is to be placed and the required space so that the remaining space of the adjusted first interface is sufficient for placing the new interface element. In the method positions and sizes of interface elements can be automatically adjusted when the space of the first interface is insufficient so that the first interface is sufficient for placing the new interface element a user does not need to manually operate the interface elements better experience is brought to the user and the use efficiency of a user interface is improved.

No. of Pages : 20 No. of Claims : 12

(12) PATENT APPLICATION PUBLICATION
(21) Application No.201617032661 A
(19) INDIA
(22) Date of filing of Application :24/09/2016
(43) Publication Date : 20/01/2017

(54) Title of the invention : METHODS FOR IMPROVING RICE NUTRITION VIA MANIPULATION OF STARCH CRYSTALLINE STRUCTURE AND NUTRIENT PENETRATION TREATMENT

(51) International classification :A23L1/10,A23L1/182
(31) Priority Document No :61/966490
(32) Priority Date :24/02/2014
(33) Name of priority country :U.S.A.
(86) International Application No :PCT/US2015/000032
Filing Date :24/02/2015
(87) International Publication No :WO 2015/126531
(61) Patent of Addition to Application Number :NA
Filing Date :NA
(62) Divisional to Application Number :NA
Filing Date :NA

(71)**Name of Applicant :**
1)PENG Zhaohua
Address of Applicant :202 Oakmont Road Starkville MS 39759 U.S.A.
2)HE Wei
3)PENG Vivian
(72)**Name of Inventor :**
1)PENG Zhaohua
2)HE Wei
3)PENG Vivian

(57) Abstract :
The methods of the invention provide improved rice grain nutrition by manipulation of the rice starch crystalline structure leading to easier penetration of nutrients into the rice grain and enhancement of rice grains with nutrients thereby creating enhanced rice grain products. In addition methods of direct delivery of nutrients into rice grains are also presented.

No. of Pages : 19 No. of Claims : 36

(12) PATENT APPLICATION PUBLICATION
(21) Application No.201617032675 A
(19) INDIA
(22) Date of filing of Application :24/09/2016
(43) Publication Date : 20/01/2017

(54) Title of the invention : WHEEL HUB UNIT

(51) International classification	:B60B27/02,F16C35/073,B60B37/06
(31) Priority Document No	:201410149431.4
(32) Priority Date	:12/04/2014
(33) Name of priority country	:China
(86) International Application No	:PCT/CN2015/074653
Filing Date	:20/03/2015
(87) International Publication No	:WO 2015/154618
(61) Patent of Addition to Application Number	:NA
Filing Date	:NA
(62) Divisional to Application Number	:NA
Filing Date	:NA

(71)**Name of Applicant :**
1)SHANDONG HAOXIN MACHINERY CO. LTD
Address of Applicant :Haoxin Industry Zone Changyi City Shandong 261307 China
(72)**Name of Inventor :**
1)LV Jixian
2)PU Guangming

(57) Abstract :
A wheel hub unit comprises a wheel hub body (100 200) a first tapered roller bearing (101 201) and a second tapered roller bearing (102 202). Two bearings are oppositely disposed in the wheel hub body (100 200). A bearing bush (104) or a shaft sleeve (204) is sleeved in the inner rings of the first tapered roller bearing (101 201) and that of the second tapered roller bearing (102 202) so as to form a rolling and sliding bearing and the high strength load is effectively absorbed the occurrence of the problems that a rolling body slides on the inner rings of the bearings that the high temperature is generated and then fatigue pitting is on the inner rings of the bearings is avoided. At the same time a seal element is disposed between the outside end of the bearing and the wheel hub body (100 200) to form the integral type independent seal. The problem that the inner rings of the bearings are exchanged and assembled in a mixed way during the assembly process is avoided and the efficiency and accuracy of assembly are improved.

No. of Pages : 6 No. of Claims : 7

(12) PATENT APPLICATION PUBLICATION
(21) Application No.201617032417 A
(19) INDIA
(22) Date of filing of Application :22/09/2016
(43) Publication Date : 20/01/2017

(54) Title of the invention : METHOD FOR PRODUCING XYLENE

(51) International classification :C07C4/18,C07C6/12,C07C15/08
(31) Priority Document No :2014063946
(32) Priority Date :26/03/2014
(33) Name of priority country :Japan
(86) International Application No :PCT/JP2015/059206
Filing Date :25/03/2015
(87) International Publication No :WO 2015/147085
(61) Patent of Addition to Application Number :NA
Filing Date :NA
(62) Divisional to Application Number :NA
Filing Date :NA

(71)**Name of Applicant :**
1)COSMO OIL CO. LTD.
Address of Applicant :1 1 Shibaura 1 chome Minato ku Tokyo 1058528 Japan
(72)**Name of Inventor :**
1)KAWADA Yusuke
2)KONDO Koichi
3)OHSHIO Nobuyasu

(57) Abstract :
Provided is a method for producing xylene with high yield by selecting an adequate starting material oil in cases where xylene is produced by subjecting a starting material oil composed of a petroleum fraction to a disproportionation reaction or a transalkylation reaction. A method for producing xylene by subjecting a starting material oil which comprises a petroleum fraction as a base material to a transalkylation reaction or a disproportionation reaction. This method for producing xylene is characterized in that an oil which contains an alkyl benzene having 7 10 carbon atoms or the like and wherein the average number of methyl groups directly bonded to each benzene ring of the alkyl benzene or the like is 1.2 to 2.8 is used as the starting material oil.

No. of Pages : 31 No. of Claims : 3

(12) PATENT APPLICATION PUBLICATION
(21) Application No.201617032418 A
(19) INDIA
(22) Date of filing of Application :22/09/2016
(43) Publication Date : 20/01/2017

(54) Title of the invention : MEDICAL DEVICES FOR MAPPING CARDIAC TISSUE AND METHODS FOR DISPLAYING MAPPING DATA

(51) International classification :A61B18/14
(31) Priority Document No :61/949062
(32) Priority Date :06/03/2014
(33) Name of priority country :U.S.A.
(86) International Application No :PCT/US2015/017289
Filing Date :24/02/2015
(87) International Publication No :WO 2015/134237
(61) Patent of Addition to Application Number :NA
Filing Date :NA
(62) Divisional to Application Number :NA
Filing Date :NA

(71)**Name of Applicant :**
1)BOSTON SCIENTIFIC SCIMED INC.
Address of Applicant :One Scimed Place Maple Grove Minnesota 55311 U.S.A.
(72)**Name of Inventor :**
1)LAUGHNER Jacob I.
2)SHOME Shibaji
3)STALSBERG Kevin J.
4)MEYER Scott A.

(57) Abstract :
Methods for displaying summarized physiological mapping data are disclosed. An example method may include storing a set of three dimensional positional data on a memory storing a set of metric data on the memory and storing a set of electrogram data on the memory. The method may also include outputting the set of three dimensional positional data the set of two dimensional metric data and the set of electrogram data from the memory to a display unit and displaying the set of three dimensional positional data the set of two dimensional metric data and the set of electrogram data on the display unit as a summarized static display.

No. of Pages : 16 No. of Claims : 15

(12) PATENT APPLICATION PUBLICATION
(19) INDIA
(22) Date of filing of Application :22/09/2016
(21) Application No.201617032419 A
(43) Publication Date : 20/01/2017

(54) Title of the invention : ENERGY CHARGING SYSTEM RELATED TO THE STOP OF AN ELECTRIC VEHICLE

(51) International classification :B60L8/00,B60L11/18
(31) Priority Document No :TO2014A000252
(32) Priority Date :26/03/2014
(33) Name of priority country :Italy
(86) International Application No :PCT/IT2015/000016
Filing Date :02/02/2015
(87) International Publication No :WO 2015/145473
(61) Patent of Addition to Application Number :NA
Filing Date :NA
(62) Divisional to Application Number :NA
Filing Date :NA

(71)**Name of Applicant :**
1)SEQUOIA AUTOMATION S.R.L.
Address of Applicant :Corso Lombardia 63C I 10099 San Mauro Torinese (TO) Italy
(72)**Name of Inventor :**
1)IPPOLITO Massimo

(57) Abstract :
An energy charging system (1) is described comprising at least one operator vehicle (10) equipped with at least one electrically supplied traction engine and moving along at least one operating path (R10) and at least one backup vehicle (20) equipped with at least one device (30) adapted to produce accumulate and transfer electric energy to such operator vehicle (10) through a connection directly and automatically performed next to at least one stop (S1 S2 ....Sn) of such operator vehicle (10) along at least one said operating path (R10) for recharging one or more electric supply batteries of the traction engine such backup vehicle (20) being adapted to move on a path spatially and timely related to such stop (S1 S2 ....Sn) of the operator vehicle (10).

No. of Pages : 9 No. of Claims : 4

(12) PATENT APPLICATION PUBLICATION
(19) INDIA
(22) Date of filing of Application :22/09/2016
(21) Application No.201617032420 A
(43) Publication Date : 20/01/2017

(54) Title of the invention : LUBRICATING SKIN ENGAGING MEMBER FOR RAZOR CARTRIDGES

(51) International classification :A61Q9/02,A61K8/86,B26B21/44
(31) Priority Document No :61/974658
(32) Priority Date :03/04/2014
(33) Name of priority country :U.S.A.
(86) International Application No :PCT/US2015/022683
Filing Date :26/03/2015
(87) International Publication No :WO 2015/153267
(61) Patent of Addition to Application Number :NA
Filing Date :NA
(62) Divisional to Application Number :NA
Filing Date :NA

(71)**Name of Applicant :**
1)The Gillette Company LLC
Address of Applicant :World Shaving Headquarters, IP/Legal Patent Department - 3E, One Gillette Park, Boston, Massachusetts 02127(US). U.S.A.
(72)**Name of Inventor :**
1)STEPHENS Alison Fiona
2)KEELING Emma Louise
3)WARRICK Paul Leslie
4)BRADFORD Valerie Jean

(57) Abstract :
A razor cartridge comprising a housing and at least two or more blades forming a blade shaving plane and a skin engaging member said member comprising a container having a base and at least one wall extending substantially vertically to a maximum height (h) of from 0.1mm above the blade plane to 0.6mm below the blade plane (P) and a skin contacting surface having a dispensing orifice and a lubricating material contained within the container; comprising a polyethylene oxide polymer having an average molecular weight of from 0.5 million to 10 million. The polyethylene oxide polymer and maximum container wall height (h) are selected such that the relationship between said molecular weight of said polyethylene oxide polymer and said maximum height of said wall is represented by the area below the line according to the formula polyethylene oxide molecular weight (million) =10 h (mm) +7.

No. of Pages : 18 No. of Claims : 16

(12) PATENT APPLICATION PUBLICATION
(19) INDIA
(22) Date of filing of Application :25/09/2016
(21) Application No.201617032677 A
(43) Publication Date : 20/01/2017

(54) Title of the invention : SYSTEMS METHODS AND ARTICLES FOR ENHANCING WELLNESS ASSOCIATED WITH HABITABLE ENVIRONMENTS

(51) International classification	:G06Q50/10,G06Q50/22,G06Q50/16
(31) Priority Document No	:61/946159
(32) Priority Date	:28/02/2014
(33) Name of priority country	:U.S.A.
(86) International Application No	:PCT/US2015/017528
Filing Date	:25/02/2015
(87) International Publication No	:WO 2015/130786
(61) Patent of Addition to Application Number	:NA
Filing Date	:NA
(62) Divisional to Application Number	:NA
Filing Date	:NA

(71)**Name of Applicant :**
1)DELOS LIVING LLC
Address of Applicant :22 Little West 12th Street. 4th Floor New York NY 10010 U.S.A.
(72)**Name of Inventor :**
1)PILLAI Dana S.
2)STODOLA Nathan B.
3)MACARY Richard A.
4)GRANGER Trevor S.
5)STEWART Shaun B.

(57) Abstract :
Environmental characteristics of habitable environments (e.g. hotel or motel rooms spas resorts cruise boat cabins offices hospitals and/or homes apartments or residences) are controlled to eliminate reduce or ameliorate adverse or harmful aspects and introduce increase or enhance beneficial aspects in order to improve a wellness or sense of wellbeing provided via the environments. Control of intensity and wavelength distribution of passive and active Illumination addresses various issues symptoms or syndromes for instance to maintain a circadian rhythm or cycle adjust for jet lag or season affective disorder etc.. Air quality and attributes are controlled. Scent(s) may be dispersed. Noise is reduced and sounds (e.g. masking music natural) may be provided. Environmental and biometric feedback is provided. Experimentation and machine learning are used to improve health outcomes and wellness standards.

No. of Pages : 120 No. of Claims : 148

(12) PATENT APPLICATION PUBLICATION
(19) INDIA
(22) Date of filing of Application :26/09/2016
(21) Application No.201617032710 A
(43) Publication Date : 20/01/2017

(54) Title of the invention : IMPROVED DATA ENTRY SYSTEMS

(51) International classification :G06F3/048
(31) Priority Document No :61/945293
(32) Priority Date :27/02/2014
(33) Name of priority country :U.S.A.
(86) International Application No :PCT/US2015/017638
Filing Date :26/02/2015
(87) International Publication No :WO 2015/130875
(61) Patent of Addition to Application Number :NA
Filing Date :NA
(62) Divisional to Application Number :NA
Filing Date :NA

(71)**Name of Applicant :**
1)KEYLESS SYSTEMS LTD.
Address of Applicant :2 Yosef Hachmy Street 96428 Jerusalem Israel
(72)**Name of Inventor :**
1)GHASSABIAN Benjamin

(57) Abstract :
A system of controlling a content comprising a content, a number of controlling conditions and/or a number of controlling means, wherein the visibility of at least portion of said content is defined and controlled by using at least one of said controlling conditions and/or controlling means.

No. of Pages : 98 No. of Claims : 15

(12) PATENT APPLICATION PUBLICATION
(21) Application No.201617032719 A
(19) INDIA
(22) Date of filing of Application :26/09/2016
(43) Publication Date : 20/01/2017

(54) Title of the invention : STABILIZER STEEL HAVING HIGH STRENGTH AND EXCELLENT CORROSION RESISTANCE VEHICLE STABILIZER EMPLOYING SAME AND METHOD FOR MANUFACTURING SAME

(51) International classification :C22C38/00,B60G21/055,C21D8/06
(31) Priority Document No :2014060687
(32) Priority Date :24/03/2014
(33) Name of priority country :Japan
(86) International Application No :PCT/JP2015/001642
Filing Date :23/03/2015
(87) International Publication No :WO 2015/146141
(61) Patent of Addition to Application Number :NA
Filing Date :NA
(62) Divisional to Application Number :NA
Filing Date :NA

(71)**Name of Applicant :**
1)JFE BARS & SHAPES CORPORATION
Address of Applicant :5 11 3 Shinbashi Minato ku Tokyo 1050004 Japan
2)NHK SPRING CO. LTD.
(72)**Name of Inventor :**
1)FUKUOKA Kazuaki
2)TOMITA Kunikazu
3)TANGE Akira
4)KURIMOTO Kiyoshi
5)GOTO Yurika

(57) Abstract :
In accordance with the present invention steel having a prescribed component composition in particular one in which the total amount of Cu + Ni is at least 15 mass% with the remainder being Fe and unavoidable impurities is brought to a crystal grain size measured subsequent to being shaped to stabilizer shape and quenched such that the prior austenitic grain size number is in the range of 7.5 10.5 whereby a high durability stabilizer steel having tensile strength of 1 200 MPa grade or above and excellent normal temperature/low temperature ductility can be obtained at lower cost through an environmentally friendly manufacturing process.

No. of Pages : 28 No. of Claims : 7

(12) PATENT APPLICATION PUBLICATION
(21) Application No.201617032725 A
(19) INDIA
(22) Date of filing of Application :26/09/2016
(43) Publication Date : 20/01/2017

(54) Title of the invention : TYRE CARCASS BUILDING DRUM AND OPERATING METHOD OF SAID TYRE CARCASS BUILDING DRUM

(51) International classification :B29D30/32
(31) Priority Document No :TO2014A000240
(32) Priority Date :24/03/2014
(33) Name of priority country :Italy
(86) International Application No :PCT/IB2015/052159
Filing Date :24/03/2015
(87) International Publication No :WO 2015/145356
(61) Patent of Addition to Application Number :NA
Filing Date :NA
(62) Divisional to Application Number :NA
Filing Date :NA

(71)**Name of Applicant :**
1)MARANGONI MECCANICA S.P.A.
Address of Applicant :Via Enrico Fermi 29 I 38068 Rovereto Italy
(72)**Name of Inventor :**
1)BALDONI Viscardo
2)BOSCOLO Flavio
3)PIZZINI Danilo

(57) Abstract :
A tyre carcass building drum (1) having a longitudinal axis (3) and two half drums (6) movable along the longitudinal axis (3) in opposite directions away from and towards a centre plane (4) of the drum (1) each one comprising a bead carrying device (16) defining a saddle and a turn up device (41) designed to turn up a annular side portion (42) of a carcass ply around and on the outside of a respective bead ring; the turn up device (43) having an end portion arranged at rest along a peripheral annular portion (18) of the saddle (17) and shaped so as to define an extension of the curvilinear profile of the saddle (17); and thrust means (50) being provided to directly and independently exert an axial thrust and a radial thrust on the turn up device (43). The invention also relates to an operating method of said drum.

No. of Pages : 13 No. of Claims : 10

(12) PATENT APPLICATION PUBLICATION
(19) INDIA
(22) Date of filing of Application :26/09/2016
(21) Application No.201617032729 A
(43) Publication Date : 20/01/2017

(54) Title of the invention : TRANSPARENT SUPPORTED ELECTRODE FOR OLED

(51) International classification :H01L51/52
(31) Priority Document No :1453584
(32) Priority Date :22/04/2014
(33) Name of priority country :France
(86) International Application No :PCT/FR2015/051069
Filing Date :20/04/2015
(87) International Publication No :WO 2015/162367
(61) Patent of Addition to Application Number :NA
Filing Date :NA
(62) Divisional to Application Number :NA
Filing Date :NA

(71)**Name of Applicant :**
1)SAINT GOBAIN GLASS FRANCE
Address of Applicant :18 Avenue dAlsace 92400 Courbevoie France
(72)**Name of Inventor :**
1)LEE Youngseong
2)HAN Jinwoo

(57) Abstract :
The invention relates to a transparent supported electrode for an OLED successively comprising: (i) a transparent substrate of mineral glass (ii) a scattering layer formed by a high index enamel containing at least 30 wt.% of BiO (iii) a barrier layer of at least one dielectric metal oxide selected from the group consisting of AlO TiO ZrO and HfOdeposited by ALD and (iv) a layer of a transparent conductive oxide (TCO). The invention also relates to a method for producing such an electrode and to an OLED comprising such an electrode.

No. of Pages : 14 No. of Claims : 11

(12) PATENT APPLICATION PUBLICATION
(19) INDIA
(22) Date of filing of Application :26/09/2016
(21) Application No.201617032735 A
(43) Publication Date : 20/01/2017

(54) Title of the invention : NEBULIZER INDICATOR DEVICE AND CONTAINER

(51) International classification :A61M15/00,A61M11/00,G06M1/02
(31) Priority Document No :14001603.1
(32) Priority Date :07/05/2014
(33) Name of priority country :EPO
(86) International Application No :PCT/EP2015/000903
Filing Date :04/05/2015
(87) International Publication No :WO 2015/169431
(61) Patent of Addition to Application Number :NA
Filing Date :NA
(62) Divisional to Application Number :NA
Filing Date :NA

(71)**Name of Applicant :**
1)BOEHRINGER INGELHEIM INTERNATIONAL GMBH
Address of Applicant :Binger Strasse 173 55216 Ingelheim am Rhein Germany
(72)**Name of Inventor :**
1)EICHER Joachim
2)GATZ Josef
3)HERRMANN Frank
4)HOELZ Hubert
5)JUNG Andree
6)MEISENHEIMER Martin
7)MUELLER Markus
8)VON SCHUCKMANN Alfred
9)WACHTEL Herbert
10)WINKLER Robert Gerhard
11)WUTTKE Gilbert
12)ZIEGLER Jochen

(57) Abstract :
A nebulizer (1) as well as a container (3) with a fluid (2) and an indicator device (25) for such a nebulizer are proposed. The indicator device stops further use of the container in a locked state when a predetermined number of uses has been reached or exceeded. Then the nebulizer is partially opened and blocked against further use. After replacement of the container including the indicator device the nebulizer can be used again.

No. of Pages : 38 No. of Claims : 30

(12) PATENT APPLICATION PUBLICATION
(19) INDIA
(22) Date of filing of Application :26/09/2016
(21) Application No.201617032736 A
(43) Publication Date : 20/01/2017

(54) Title of the invention : MODULAR PHOTOCHEMICAL FLOW REACTOR SYSTEM

(51) International classification :B01J19/12,B01J19/24
(31) Priority Document No :14305433.6
(32) Priority Date :26/03/2014
(33) Name of priority country :EPO
(86) International Application No :PCT/US2015/021622
Filing Date :20/03/2015
(87) International Publication No :WO 2015/148279
(61) Patent of Addition to Application Number :NA
Filing Date :NA
(62) Divisional to Application Number :NA
Filing Date :NA

(71)**Name of Applicant :**
1)CORNING INCORPORATED
Address of Applicant :1 Riverfront Plaza Corning New York 14831 U.S.A.
(72)**Name of Inventor :**
1)GREMETZ Sylvain Maxime F Gremetz
2)HORN Clemens Rudolf
3)LOBET Olivier

(57) Abstract :
A modular photochemical reactor system comprises a plurality of fluidic modules (20) each having i) a central planar process fluid layer (30) and ii) two outer planar thermal control fluid layers (40) for containing flowing thermal control fluid and a plurality of illumination modules (50) the illumination modules (50) of said plurality each having a planar form with first and second major surfaces (52 54) and each comprising at least a first array (60) of semiconductor emitters (70) said emitters (70) positioned to emit from or through the first major surface (52) wherein said first array (60) of semiconductor emitters (70) comprises at least a first emitter (72) and a second emitter (74) the first emitter (72) capable of emitting at a first center wavelength and the second emitter (74) capable of emitting at a second center wavelength said first and second center wavelengths differing from each other.

No. of Pages : 10 No. of Claims : 10

(12) PATENT APPLICATION PUBLICATION
(19) INDIA
(22) Date of filing of Application :26/09/2016
(21) Application No.201617032737 A
(43) Publication Date : 20/01/2017

(54) Title of the invention : HIGH STRENGTH STEEL SHEET AND PRODUCTION METHOD THEREFOR

(51) International classification :C22C38/06,C21D8/02,C21D9/46
(31) Priority Document No :2014094026
(32) Priority Date :30/04/2014
(33) Name of priority country :Japan
(86) International Application No :PCT/JP2015/002176
Filing Date :22/04/2015
(87) International Publication No :WO 2015/166646
(61) Patent of Addition to Application Number :NA
Filing Date :NA
(62) Divisional to Application Number :NA
Filing Date :NA

(71)**Name of Applicant :**
1)JFE STEEL CORPORATION
Address of Applicant :2 3 Uchisaiwai cho 2 chome Chiyoda ku Tokyo 1000011 Japan
(72)**Name of Inventor :**
1)SAITO Hayato
2)KOJIMA Katsumi
3)TADA Masaki
4)NAKAMARU Hiroki

(57) Abstract :
Provided is a high strength steel sheet that has favorable formability (workability) and strength. Also provided is a production method for the high strength steel sheet. A high strength steel sheet that is characterized by containing 0.010 0.080 mass% of C 0.05 mass% or less of Si 0.10 0.70 mass% of Mn 0.03 mass% or less of P 0.020 mass% or less of S 0.005 0.070 mass% of Al and 0.0120 0.0180 mass% of N the remainder having a component composition that comprises Fe and unavoidable impurities and that is characterized by solid solution N content being 0.0100 mass% or more as part of the N content by average ferrite particle diameter being 7.0 μm or less by having a dislocation density of 4.0 x 10 2.0 x 10 mat a depth of 1/4 sheet thickness from the surface by having a post aging tensile strength of 530 MPa or more in the direction perpendicular to the rolling direction and by having an elongation of 7% or more.

No. of Pages : 29 No. of Claims : 2

(12) PATENT APPLICATION PUBLICATION
(21) Application No.201617032738 A
(19) INDIA
(22) Date of filing of Application :26/09/2016
(43) Publication Date : 20/01/2017

(54) Title of the invention : IMPROVED ADHESIVE BONDING COMPOSITION AND METHOD OF USE

(51) International classification :B32B7/12,C08F2/46,C08F2/48
(31) Priority Document No :61/955131
(32) Priority Date :18/03/2014
(33) Name of priority country :U.S.A.
(86) International Application No :PCT/US2015/021307
Filing Date :18/03/2015
(87) International Publication No :WO 2015/143065
(61) Patent of Addition to Application Number :NA
Filing Date :NA
(62) Divisional to Application Number :NA
Filing Date :NA

(71)**Name of Applicant :**
1)IMMUNOLIGHT LLC
Address of Applicant :1901 St. Antoine St. 6th Floor at Ford Field Detroit MI 48226 U.S.A.
(72)**Name of Inventor :**
1)FATHI Zakaryae
2)BOURKE Frederic Avery Jr.
3)WALDER Harold

(57) Abstract :
A method of and system for adhesive bonding. The method and system a) treat a surface of an element to be bonded to provide an adherent structure including one or more rubber compounds on the surface; b) place a polymerizable adhesive composition including at least one photoinitiator and at least one energy converting material in contact with the adherent structure and two or more components to be bonded to form an assembly c) irradiated the assembly with radiation at a first wavelength capable of conversion by the at least one energy converting material to a second wavelength capable of activating the at least one photoinitiator to produce from the polymerizable adhesive composition a cured adhesive composition; and d) adhesively join the two or more components by way of the adherent structure and the cured adhesive composition.

No. of Pages : 77 No. of Claims : 50

(12) PATENT APPLICATION PUBLICATION
(19) INDIA
(22) Date of filing of Application :25/08/2016
(21) Application No.201617029013 A
(43) Publication Date : 20/01/2017

(54) Title of the invention : WIRE GRID POLARIZER AND METHOD OF MANUFACTURE

(51) International classification :G02C3/00
(31) Priority Document No :61/936831
(32) Priority Date :06/02/2014
(33) Name of priority country :U.S.A.
(86) International Application No :PCT/US2015/014920
Filing Date :06/02/2015
(87) International Publication No :WO 2015/120335
(61) Patent of Addition to Application Number :NA
Filing Date :NA
(62) Divisional to Application Number :NA
Filing Date :NA

(71)**Name of Applicant :**
1)VISION EASE LP
Address of Applicant :7000 Sunwood Drive NW Ramsey Minnesota 55303 U.S.A.
(72)**Name of Inventor :**
1)BLACKER Richard
2)OLUND David

(57) Abstract :
A polarizing optical article formed by selectively applying a conductive coating to a portion of a structured surface formed of a series of linear peaks and valleys.

No. of Pages : 12 No. of Claims : 20

(12) PATENT APPLICATION PUBLICATION
(19) INDIA
(22) Date of filing of Application :26/08/2016
(21) Application No.201617029020 A
(43) Publication Date : 20/01/2017

(54) Title of the invention : PLAIN BEARING SHELL AND PISTON FOR A RADIAL PISTON ENGINE

(51) International classification :F04B39/00,F04B53/00,F16C9/04
(31) Priority Document No :10 2014 203 571.6
(32) Priority Date :27/02/2014
(33) Name of priority country :Germany
(86) International Application No :PCT/EP2015/053904
Filing Date :25/02/2015
(87) International Publication No :WO 2015/128362
(61) Patent of Addition to Application Number :NA
Filing Date :NA
(62) Divisional to Application Number :NA
Filing Date :NA

(71)**Name of Applicant :**
1)KS GLEITLAGER GMBH
Address of Applicant :Am Bahnhof 14 68789 St. Leon Rot Germany
(72)**Name of Inventor :**
1)HEGER Peter
2)HAECKER Stefan
3)STADLER Thorsten
4)BAHM Hermann
5)C‰SAR Nelly

(57) Abstract :
The invention relates to a plain bearing shell (2) having a substantially semicylindrical geometry for use in a piston (50) of a radial piston engine for the purposes of mounting a roller or shaft having an axial direction (4) a radial direction (6) and a circumferential direction (8) of the plain bearing shell having two face sides (10 12) which face away from one another in the axial direction (4) having a radially outer side (14) and a radially inner side (16) which faces toward the roller or shaft and which receives said roller or shaft such that it can slide in the circumferential direction (8); it is proposed according to the invention that on at least one face side (10 12) there is provided a projection (18) which protrudes in the axial direction (4) of the plain bearing shell and which serves to form a means for preventing rotation in the circumferential direction (8).

No. of Pages : 8 No. of Claims : 16

(12) PATENT APPLICATION PUBLICATION
(21) Application No.2107/DEL/2015 A
(19) INDIA
(22) Date of filing of Application :13/07/2015
(43) Publication Date : 20/01/2017

(54) Title of the invention : MINE TRANSPORT SURVELLANCE SYSTEM

(51) International classification	:E21F 17/00	(71)**Name of Applicant :**
(31) Priority Document No	:NA	**1)COUNCIL OF SCIENTIFIC & INDUSTRIAL RESEARCH**
(32) Priority Date	:NA	Address of Applicant :ANUSANDHAN BHAWAN, RAFI MARG, NEW DELHI - 110001, INDIA. Delhi India
(33) Name of priority country	:NA	
(86) International Application No	:NA	(72)**Name of Inventor :**
Filing Date	:NA	**1)SWADES KUMAR CHAULYA**
(87) International Publication No	: NA	**2)GIRENDRA MOHAN PRASAD**
(61) Patent of Addition to Application Number	:NA	
Filing Date	:NA	
(62) Divisional to Application Number	:NA	
Filing Date	:NA	

(57) Abstract :
The mine transport surveillance system of the present invention monitors and controls mineral overloading, mineral theft and illicit mineral transportation from mines. Vehicles passing through authorized routes are checked, monitored and billed according to the requirement of mine management. The present invention consists of different sub-systems to perform various functions. The system uses radio-frequency identification (RFID) tag to identify location of each vehicle in mines. Rt positioning sensor is used for accurate rneasun:ment of mineral weight by ensuring appropriate dumpers/trucks position on weighbridge platform. The system uses a weighbridge ffi!tom-atlon-system ±or-e±t1c1erit anaautomatic conttor-ofwetgning ana -tr1ineraluispciTGlri1t-lnine-s using RFID tags, boom barrier, number-plate scanning camera, weighbridge automation using onboard truck weighing system and in-motion weighbridge, computer and peripherals. The system uses a programmable logic controller (PLC) for automatic operation of different sub-systems integrated with weighbridge. It also incorporates a RFID based system for tracking and monitoring of dumpers throughout the mine. Global positioning system (GPS) based mine transport surveillance system also tracks vehicles throughout the long range transport route up to destination. The system provides guidance for optimum deployment of shovel-dumper combination to improve productivity of an opencast mine. The system incorporates an anisotropic magneto resistive (AMR) and microwave sensors in· unauthorized paths and mine lease periphery for controlling illicit mineral transportation. It also provides a wireless communication system for transferring data and video from different locations of mine to a remote control room. The system is developed by integrating hardware and software for monitoring, controlling and data processing of all the subsystems.

No. of Pages : 30 No. of Claims : 10

(12) PATENT APPLICATION PUBLICATION
(21) Application No.2108/DEL/2015 A
(19) INDIA
(22) Date of filing of Application :13/07/2015
(43) Publication Date : 20/01/2017

(54) Title of the invention : IMPROVED CATALYTIC HYDROGENATION PROCESS FOR P-AMINOPHENOL WITH CONTINUOUS ORGANIC PHASE

(51) International classification	:C07C 209/00
(31) Priority Document No	:NA
(32) Priority Date	:NA
(33) Name of priority country	:NA
(86) International Application No	:NA
Filing Date	:NA
(87) International Publication No	: NA
(61) Patent of Addition to Application Number	:NA
Filing Date	:NA
(62) Divisional to Application Number	:NA
Filing Date	:NA

(71)**Name of Applicant :**
1)COUNCIL OF SCIENTIFIC & INDUSTRIAL RESEARCH
Address of Applicant :ANUSANDHAN BHAWAN, RAFI MARG, NEW DELHI - 110 001, INDIA Delhi India
(72)**Name of Inventor :**
1)CHANDRASHEKHAR VASANT RODE
2)SUNIL SHANKAR JOSHI
3)NILESH ATMARAM MALI
4)VIVEK VINAYAK RANADE

(57) Abstract :
p-Aminophenol (PAP) is an important chemical intermediate used in the manufacturing of paracetamol and also finds wide applications as an intermediate in the production of dyestuffs and photo graphic chemicals. There exists a need in the art to develop an efficient process to obtain p-aminophenol from nitro benzene in high yields and selectivity. The invention discloses an improved process for the synthesis of PAP, wherein the yield of the product is > 80%. The process comprises the steps of: Reacting hydrogen and nitro benzene in presence of a catalyst in an organic phase in presence of sulphuric acid to obtain PAP, aniline and DADPE mixture and separating DADPE from the mixture of earlier step and further processing DADPE to obtain PAP.

No. of Pages : 17 No. of Claims : 10

(12) PATENT APPLICATION PUBLICATION
(21) Application No.201617029396 A
(19) INDIA
(22) Date of filing of Application :29/08/2016
(43) Publication Date : 20/01/2017

(54) Title of the invention : RECIPROCATING IMPACT SLACK DROP/ROTATING/RAKING MULTIFUNCTIONAL POWER SHAFT

(51) International classification :E21C27/28
(31) Priority Document No :201410042607.6
(32) Priority Date :29/01/2014
(33) Name of priority country :China
(86) International Application No :PCT/CN2015/071783
Filing Date :29/01/2015
(87) International Publication No :WO 2015/113505
(61) Patent of Addition to Application Number :NA
Filing Date :NA
(62) Divisional to Application Number :NA
Filing Date :NA

(71)**Name of Applicant :**
1)LIU Suhua
Address of Applicant :Yanzhou Haizhi Mechanical and Electrical Technology Co. LTD Xinyanzhen Industrial Park Yanzhou Jining Shandong 272100 China
(72)**Name of Inventor :**
1)LIU Suhua

(57) Abstract :
A reciprocating impact slack drop/rotating/raking multifunctional power shaft comprising a power shaft section (5) eccentric shaft sections (6) a power take off (2) and a power source component (4); the power take off (2) comprising a lubricated power take off (7) and/or a raking power take off (8); the eccentric shaft sections (6) comprising bearing separate snap fitted eccentric shaft sections (6) or bearing integrated sleeved eccentric shaft sections (3); the eccentric shaft sections (6) further comprising connecting rods (1) the connecting rods (1) comprising separate snap fitted connecting rods (1) and/or integrated sleeved connecting rods (1); the power take off (2) being arranged between the power shaft section (5) and the eccentric shaft section (6) or the power take off (2) being arranged between the eccentric shaft section (6) and the eccentric shaft section (6) or the power take off (2) being arranged at one end of the eccentric shaft section (6) or the power take off (2) being arranged at one end of the power shaft section (5); the power source component (4) driving the power shaft section (5) to rotate; the eccentric shaft section (6) driving the connecting rod (1) in reciprocating motion; and the power shaft section (5) driving the lubricated power take off and/or the raking power take off to operate in rotation.

No. of Pages : 20 No. of Claims : 15

(12) PATENT APPLICATION PUBLICATION
(19) INDIA
(22) Date of filing of Application :29/08/2016

(21) Application No.201617029407 A
(43) Publication Date : 20/01/2017

(54) Title of the invention : SYNTHETIC METHOD

(51) International classification :C07C11/02,C07C37/00
(31) Priority Document No :1401612.5
(32) Priority Date :30/01/2014
(33) Name of priority country :U.K.
(86) International Application No :PCT/GB2015/050189
Filing Date :28/01/2015
(87) International Publication No :WO 2015/114323
(61) Patent of Addition to Application Number :NA
Filing Date :NA
(62) Divisional to Application Number :NA
Filing Date :NA

(71)**Name of Applicant :**
1)UNIVERSITY COURT OF THE UNIVERSITY OF ST ANDREWS
Address of Applicant :College Gate North Street St Andrews Fife KY16 9AJ U.K.
(72)**Name of Inventor :**
1)JULIS Jennifer
2)BARTLETT Stuart
3)COLE HAMILTON David John

(57) Abstract :
The invention relates to a method of alkene metathesis. In the method at least one monoalkene is subjected to ethenolysis in the presence of a diene. The invention also relates to the use of a diene to promote an ethenolysis reaction conducted on a monoalkene.

No. of Pages : 49 No. of Claims : 43

(12) PATENT APPLICATION PUBLICATION
(21) Application No.201617029432 A
(19) INDIA
(22) Date of filing of Application :29/08/2016
(43) Publication Date : 20/01/2017

(54) Title of the invention : CONSTRUCTION SITE IMAGE MANAGEMENT SYSTEM AND METHOD

(51) International classification :G06Q10/06,G06F17/30
(31) Priority Document No :PA 2014 00048
(32) Priority Date :29/01/2014
(33) Name of priority country :Denmark
(86) International Application No :PCT/DK2015/000004
Filing Date :29/01/2015
(87) International Publication No :WO 2015/113568
(61) Patent of Addition to Application Number :NA
Filing Date :NA
(62) Divisional to Application Number :NA
Filing Date :NA

(71)**Name of Applicant :**
1)LOCAL TOWERS
Address of Applicant :c/o B WEB Nygrdsvej 23 DK 6740 Bramming Denmark
2)CHRISTENSEN Michael
(72)**Name of Inventor :**
1)BANG Kim Fonnesb¦k

(57) Abstract :
The present disclosure relates generally to handheld electronic devices equipped with Global Positioning System (GPS) receivers or other location determining subsystems. The invention is particular useful in the construction industry where multiple worksites are in play that do not necessarily correlate predefined locations in the available map data. Some embodiments of the invention relates to a construction site image management system with a server having a construction site database for a set of construction sites comprising and a user interface allowing a user to graphically define a detection area so that subsequently received images from the field can be assigned to the sites in the database based on the recorded image location. The system typically has multiple mobile terminals adapted to capture images and the location of capture as well as features prompt the user to approve or reject the captured image and transmit approved images to the server which then assigns them. This enables the server to provide a quasi live status for all the sites.

No. of Pages : 27 No. of Claims : 36

(12) PATENT APPLICATION PUBLICATION
(21) Application No.2114/DEL/2015 A
(19) INDIA
(22) Date of filing of Application :13/07/2015
(43) Publication Date : 20/01/2017

(54) Title of the invention : LOW DENSITY ACOUSTIC GEL FOR TOWED SENSOR ARRAY

(51) International classification	:G01V 1/00	(71)**Name of Applicant :**
(31) Priority Document No	:NA	**1)DIRECTOR GENERAL, DEFENCE RESEARCH & DEVELOPMENT ORGANIZATION**
(32) Priority Date	:NA	Address of Applicant :Ministry of Defence, Govt. of India,
(33) Name of priority country	:NA	Room No 348, B - Wing, DRDO Bhawan, Rajaji Marg, New
(86) International Application No	:NA	Delhi 110011, India Delhi India
Filing Date	:NA	(72)**Name of Inventor :**
(87) International Publication No	: NA	**1)JOHN, Reji**
(61) Patent of Addition to Application Number	:NA	**2)MATHEW, Manoth**
Filing Date	:NA	**3)KUMAR, Adiyodi Veetil Ramesh**
(62) Divisional to Application Number	:NA	**4)SUBRAMONIAM, Shivan Pillai Subash**
Filing Date	:NA	**5)SUNDAR, Renganathan Sivakami Arun**

(57) Abstract :
The present disclosure provides a gel composition for towed sensor array having an mineral oil preferably iso-parafinic oil in the range of 60-94wt%; a non polar polymer in the range of 5-38wt% and one or more hardening agent in the range of 1-2wt%. Further the disclosure provides a method of preparing the above gel composition. In addition, the disclosure provides a method of preparing an acoustic coupling material for towed sensor arrays using the above gel composition.

No. of Pages : 15 No. of Claims : 8

(12) PATENT APPLICATION PUBLICATION
(21) Application No.201617029203 A
(19) INDIA
(22) Date of filing of Application :26/08/2016
(43) Publication Date : 20/01/2017

(54) Title of the invention : DEVICE AND MECHANISM FOR FACILITATING NON INVASIVE NON PIERCING MONITORING OF BLOOD GLUCOSE

(51) International classification :A61B5/1455
(31) Priority Document No :61/946576
(32) Priority Date :28/02/2014
(33) Name of priority country :U.S.A.
(86) International Application No :PCT/US2014/041788
Filing Date :10/06/2014
(87) International Publication No :WO 2015/130332
(61) Patent of Addition to Application Number :NA
Filing Date :NA
(62) Divisional to Application Number :NA
Filing Date :NA

(71)**Name of Applicant :**
1)TECH4LIFE ENTERPRISES CANADA INC.
Address of Applicant :3194 Robert Brown Boulevard Oakville Ontario L6M 0P2 Canada
(72)**Name of Inventor :**
1)TIRMIZI Syeda Suha

(57) Abstract :
A mechanism is described for facilitating non invasive and non skin piercing monitoring of blood glucose according to one embodiment. A method of embodiments as described herein includes receiving a body part including a finger where the body part in the placement area causes interruptions in the running of a light. The method may further include detecting initial readings corresponding to the interruptions the initial readings including signals where a signal is generated each time the light is interrupted while passing through the body part calculating absolute values based on the initial readings and computing a final glucose reading based on the absolute values.

No. of Pages : 29 No. of Claims : 21

(12) PATENT APPLICATION PUBLICATION
(21) Application No.201617029210 A
(19) INDIA
(22) Date of filing of Application :26/08/2016
(43) Publication Date : 20/01/2017

(54) Title of the invention : SYSTEM AND METHOD FOR MULTIPLE INPUT AND MULTIPLE OUTPUT (MIMO) FULL DUPLEX PRECODING STRUCTURES

(51) International classification :H04B15/00
(31) Priority Document No :61/945507
(32) Priority Date :27/02/2014
(33) Name of priority country :U.S.A.
(86) International Application No :PCT/US2015/018121
Filing Date :27/02/2015
(87) International Publication No :WO 2015/131116
(61) Patent of Addition to Application Number :NA
Filing Date :NA
(62) Divisional to Application Number :NA
Filing Date :NA

(71)**Name of Applicant :**
1)HUAWEI TECHNOLOGIES CO. LTD.
Address of Applicant :Huawei Administration Building Bantian Longgang District Shenzhen Guangdong 518129 China
(72)**Name of Inventor :**
1)LE NGOC Tho
2)HUBERMAN Sean

(57) Abstract :
Embodiments are provided to enable effective cancellation or reduction of the self interference (SI) introduced when applying full duplex (FD) transmission to Multiple Input Multiple Output (MIMO) systems. A method embodiment includes forming using a precoding matrix generated in accordance with channel conditions a plurality of beams for a plurality of transmit signals and a plurality of self interference cancellation signals corresponding to the plurality of transmit signals. The method further includes transmitting at a plurality of antennas the plurality of beams for the transmit signals and receiving via the plurality of antennas a plurality of receive signals. A corresponding self interference cancellation signal is then added to each of the plurality of receive signals to obtain a plurality of corrected receive signals and the plurality of corrected receive signals are detected at a plurality of receivers.

No. of Pages : 10 No. of Claims : 21

(12) PATENT APPLICATION PUBLICATION
(21) Application No.2110/DEL/2015 A
(19) INDIA
(22) Date of filing of Application :13/07/2015
(43) Publication Date : 20/01/2017

(54) Title of the invention : THERMALLY CYCLABLE GLASS SEALANT COMPOSTION FOR INTERMEDIATE TEMPERATURE SOLID OXIDE FUEL CELL AND A PROCESS THEREOF

(51) International classification	:C03C 3/00	(71)**Name of Applicant :**
(31) Priority Document No	:NA	**1)COUNCIL OF SCIENTIFIC & INDUSTRIAL RESEARCH**
(32) Priority Date	:NA	Address of Applicant :ANUSANDHAN BHAWAN, RAFI MARG, NEW DELHI - 110 001, INDIA. Delhi India
(33) Name of priority country	:NA	
(86) International Application No	:NA	(72)**Name of Inventor :**
Filing Date	:NA	**1)KARMAKAR BASUDEB**
(87) International Publication No	: NA	**2)BASU RAJENDRANATH**
(61) Patent of Addition to Application Number	:NA	**3)TARAFDER ANAL**
Filing Date	:NA	**4)SASMAL NIBEDITA**
(62) Divisional to Application Number	:NA	**5)GARAI MRINMOY**
Filing Date	:NA	

(57) Abstract :
The present invention provides a novel alkali and barium-free NiU contalning boro-silicate phosphate (P205)-based glass compositions for solid oxide file1 cell (SOFC) having (mol% of) 20-26 CaO, 20-26 SrO, 3-10 B203,3 4-42 SiO2, 1-5 P20s, 1-5 AI2o3, 1-4 i 0 2 , l - 5N iO, .. 2-4 La203 and 1-3 Ce02 and a process for the preparation thereof. The invented glasses are well suited for use with the SOFC stack components having the CTE value of 9.85 to 12.22 x I oy6/1<. . In addition, these glasses .exhibit thermally cyclability when they are being tested in 25°C -800°C -25OC temperature regions. It is also found that these thermally cyclable glasses are thermally stable up to 1,000 h. These glasses have the capability to reduce the reaction with the intermediate temperature SOFC components since the glass compositions are alkali and barium-free. Moreover, the glass compositions are equally useable in solid oxide electrolyzer cell (SOEC).

No. of Pages : 22 No. of Claims : 6

(12) PATENT APPLICATION PUBLICATION
(21) Application No.2111/DEL/2015 A
(19) INDIA
(22) Date of filing of Application :13/07/2015
(43) Publication Date : 20/01/2017

(54) Title of the invention : PENDRIVE WITH OPERATING SYSTEM CONTROLLED IN- BUILT PERMANENT DATA STORAGE PARTITION

(51) International classification	:G06F 3/00
(31) Priority Document No	:NA
(32) Priority Date	:NA
(33) Name of priority country	:NA
(86) International Application No	:NA
Filing Date	:NA
(87) International Publication No	: NA
(61) Patent of Addition to Application Number	:NA
Filing Date	:NA
(62) Divisional to Application Number	:NA
Filing Date	:NA

(71)**Name of Applicant :**
1)ROHIT KUMAR
Address of Applicant :Assistant Professor Department of Computer Science and Engineering CHANDIGARH UNIVERSITY Gharuan, Distt.-Mohali Punjab Punjab India
2)LOKESH PAWAR
(72)**Name of Inventor :**
1)ROHIT KUMAR
2)LOKESH PAWAR

(57) Abstract :
The inventor of the present invention has developed a pen-drive with in-built lost and theft detection measures. ROM a permanent storage memory is installed inside the hardware of pen-drive which is controlled by operating system. The ROM is further programmed to store the information about the owner which cannot be formatted. Hence, owner information is permanently stored in ROM memory. The log files is maintained for each operation performed in the pen-drive (open, cut, copy, delete and format). But in case of delete and format, an image file is kept in the fix security memory space provided in the pen-drive itself.

No. of Pages : 15 No. of Claims : 2

(12) PATENT APPLICATION PUBLICATION
(21) Application No.201614024015 A
(19) INDIA
(22) Date of filing of Application :13/07/2016
(43) Publication Date : 20/01/2017

(54) Title of the invention : METHOD FOR THE SAFE STARTING AND/OR STOPPING OF A ROTOR OF A ROTOR SPINNING MACHINE AND THE ROTOR SPINNING MACHINE

(51) International classification :D01H4/50
(31) Priority Document No :10 2015 111 673.1
(32) Priority Date :17/07/2015
(33) Name of priority country :Germany
(86) International Application No :NA
Filing Date :NA
(87) International Publication No : NA
(61) Patent of Addition to Application Number :NA
Filing Date :NA
(62) Divisional to Application Number :NA
Filing Date :NA

(71)**Name of Applicant :**
1)Rieter CZ s.r.o.
Address of Applicant :Moravska 519, 562 01 Usti nad Orlici, Czech Republic Czech Republic
(72)**Name of Inventor :**
1)Bernd Bahlmann
2)Mario Maleck
3)Miroslav Stus¡k
4)Milan Moravec
5)Jiri Sloupensky
6)Peter Dirnberger

(57) Abstract :
With a method for the safe starting and/or stopping a rotor of a rotor spinning machine for the production of yarn, with a multiple number of rotors, each of which rotates in a rotor housing covered by a lid, each rotor is driven by its own motor and is held in at least one radially and/or axially active magnetic bearing by means of a position controller. A data connection of the motor with a control unit is provided, in order to drive the rotor in various operating states. There is a check of the control for driving the rotor, the position control for the one or more active magnetic bearings, the data connection for controlling the motor and/or the properly closed lid, and, in the event that predetermined target values and/or states are not met, the start of the rotor is blocked or the motor that is already running is selectively stopped. A rotor spinning machine is suitable for carrying out the method. (Figure 1)

No. of Pages : 21 No. of Claims : 14

(12) PATENT APPLICATION PUBLICATION
(21) Application No.201614024286 A
(19) INDIA
(22) Date of filing of Application :15/07/2016
(43) Publication Date : 20/01/2017

(54) Title of the invention : BRACKET FOR ELECTRICAL CONNECTION BOX AND ELECTRICAL CONNECTION BOX EQUIPPED WITH BRACKET USING THE SAME

(51) International classification	:H01R4/66
(31) Priority Document No	:2015-141818
(32) Priority Date	:16/07/2015
(33) Name of priority country	:Japan
(86) International Application No	:NA
Filing Date	:NA
(87) International Publication No	: NA
(61) Patent of Addition to Application Number	:NA
Filing Date	:NA
(62) Divisional to Application Number	:NA
Filing Date	:NA

(71)**Name of Applicant :**
1)SUMITOMO WIRING SYSTEMS, LTD.
Address of Applicant :1-14, Nishisuehiro-cho, Yokkaichi, Mie 510-8503, Japan Japan
2)SUZUKI MOTOR CORPORATION
(72)**Name of Inventor :**
1)ISSHIKI, Maiko
2)INAMASU, Kazuya
3)YAMAMOTO, Hiroya
4)KURITA, Koutarou

(57) Abstract :
A bracket for an electrical connection box, includes: a mounting part on which the electrical connection box is mounted; an attachment part that protrudes from the mounting part and is fixed to a fixed member; a harness fixing part that is formed on the mounting part to fixedly retain a wire harness; and a pair of reinforcing ribs that protrude from the mounting part and extend from a circumference of the attachment part to the harness fixing part to be spaced apart from and be parallel to each other.

No. of Pages : 30 No. of Claims : 7

(12) PATENT APPLICATION PUBLICATION
(21) Application No.201614024322 A
(19) INDIA
(22) Date of filing of Application :15/07/2016
(43) Publication Date : 20/01/2017

(54) Title of the invention : STEERING SUPPORT MEMBER

(51) International classification	:B62D1/16
(31) Priority Document No	:2015-142625
(32) Priority Date	:17/07/2015
(33) Name of priority country	:Japan
(86) International Application No	:NA
Filing Date	:NA
(87) International Publication No	: NA
(61) Patent of Addition to Application Number	:NA
Filing Date	:NA
(62) Divisional to Application Number	:NA
Filing Date	:NA

(71)**Name of Applicant :**
1)Suzuki Motor Corporation
Address of Applicant :300, Takatsuka-cho, Minami-ku, Hamamatsu-shi, Shizuoka 432-8611, Japan Japan
(72)**Name of Inventor :**
1)SARUTA, Masamichi

(57) Abstract :
There is provided a steering support member to which a steering column configured to rotatably support a steering shaft is to be fixed. A main pipe is bridged to right and left sides of a vehicle. A sub-pipe is joined to the main pipe at a driver seat-side. The main pipe at the driver seat-side has a main pipe part between both longitudinal end portions thereof, which is bent so as to be recessed towards a vehicle rear side. The steering column is positioned between a pair of right and left bent portions of the main pipe part, as seen from a front-rear direction of the vehicle.

No. of Pages : 20 No. of Claims : 4

(12) PATENT APPLICATION PUBLICATION
(21) Application No.2150/DEL/2015 A
(19) INDIA
(22) Date of filing of Application :15/07/2015
(43) Publication Date : 20/01/2017

(54) Title of the invention : SELF POWERED BABY MOTOR-CYCLE WITH RECHARGING BATTERY BY HUMAN EFFORT

(51) International classification	:B60L 8/00
(31) Priority Document No	:NA
(32) Priority Date	:NA
(33) Name of priority country	:NA
(86) International Application No	:NA
Filing Date	:NA
(87) International Publication No	: NA
(61) Patent of Addition to Application Number	:NA
Filing Date	:NA
(62) Divisional to Application Number	:NA
Filing Date	:NA

(71)**Name of Applicant :**
1)ANSHU JHA
Address of Applicant :WZ-212, LAJWANTI GARDEN, , GALI NO.-6, NEW DELHI-110046. Delhi India
(72)**Name of Inventor :**
1)ANSHU JHA

(57) Abstract :
This self powered baby motor cycle system of mine is how to convert human effort to useful energy which can be used when stored energy in human gets exhausted. Everyone travels everyday from home to office and back by taking either public transport or by personal vehicle (412 wheeler). In this system I have converted a ordinary bicycle to a motorcycle using a direct current (DC) machine to drive its wheels through a complete gearbox arrangement and this DC machine (functioning as motor) is supplied by a storage battery. When battery gets exhausted then this motorcycle is run by self effort and DC machine act as DC generator which charges battery while motorcycle is moving by manual effort. After running this cycle for some distance, energy will get stored in battery that can be used to drive motorcycle for some distance without pedaling. This project also stand on definition of clean technology. . In day today life when we look around we can see on road a lots of noise, pollution, lack of parking, diesel, petrol, fuel pricing and. above all not having enough money to buy a vehicle so this would be a solution of these problems it is not a prototype but a working model. It gives you a safer drive. The primary focus of this said system is to produce energy itself but if somebody is not well or not able to pedal then secondary option of charging battery through external source is also available.

No. of Pages : 23 No. of Claims : 7

(12) PATENT APPLICATION PUBLICATION
(19) INDIA
(22) Date of filing of Application :24/08/2016
(21) Application No.201617028764 A
(43) Publication Date : 20/01/2017

(54) Title of the invention : IMMUNOMODULATORY COMPOUNDS

(51) International classification	:A61K45/06,A61K31/00,A61K31/74
(31) Priority Document No	:1401228.0
(32) Priority Date	:24/01/2014
(33) Name of priority country	:U.K.
(86) International Application No	:PCT/GB2015/050161
Filing Date	:23/01/2015
(87) International Publication No	:WO 2015/110831
(61) Patent of Addition to Application Number	:NA
Filing Date	:NA
(62) Divisional to Application Number	:NA
Filing Date	:NA

(71)**Name of Applicant :**
1)UNIVERSITY COURT OF THE UNIVERSITY OF ST ANDREWS
Address of Applicant :College Gate North Street St Andrews KY16 9AJ U.K.
(72)**Name of Inventor :**
1)TAYLOR Garry
2)CONNARIS Helen

(57) Abstract :
The present invention is based on the finding that in addition to interfering with or blocking preventing and/or inhibiting the interaction between a pathogen and for example a sialic acid containing cell surface receptor certain sialic acid binding molecules have immunomodulatory properties. The invention provides methods and uses which exploit sialic acid binding molecules in the treatment and/or prevention of disease by modulation and/or priming of the host immune response.

No. of Pages : 57 No. of Claims : 38

(12) PATENT APPLICATION PUBLICATION
(19) INDIA
(22) Date of filing of Application :24/08/2016
(21) Application No.201617028772 A
(43) Publication Date : 20/01/2017

(54) Title of the invention : COMBINATION OF BACLOFEN ACAMPROSATE AND MEDIUM CHAIN TRIGLYCERIDES FOR THE TREATMENT OF NEUROLOGICAL DISORDERS

(51) International classification	:A61K31/185,A61K31/197,A61K31/20
(31) Priority Document No	:61/938340
(32) Priority Date	:11/02/2014
(33) Name of priority country	:U.S.A.
(86) International Application No	:PCT/EP2015/052694
Filing Date	:10/02/2015
(87) International Publication No	:WO 2015/121218
(61) Patent of Addition to Application Number	:NA
Filing Date	:NA
(62) Divisional to Application Number	:NA
Filing Date	:NA

(71)**Name of Applicant :**
1)PHARNEXT
Address of Applicant :11 Rue des Peupliers F 92130 Issy Les Moulineaux France
(72)**Name of Inventor :**
1)COHEN Daniel
2)CHUMAKOV Ilya
3)NABIROCHKIN Serguei
4)HAJJ Rodolphe

(57) Abstract :
The present invention relates to combinations and methods for the treatment of neurological disorders related Amyloid beta toxicity and/or neuronal death and/or glucose impaired neuronal metabolism. More specifically the present invention relates to novel combinatorial therapies of Alzheimer s disease Alzheimer s disease related disorders frontotemporal dementia Parkinson s disease Lewy body dementia Huntington s disease peripheral neuropathies alcoholism or alcohol withdrawal neurological manifestations of drug abuse or drug abuse withdrawal amyotrophic lateral sclerosis multiple sclerosis spinal cord injury epilepsy traumatic brain injury or brain ischemic events based on baclofen acamprosate and at least one medium chain triglyceride.

No. of Pages : 42 No. of Claims : 24

(12) PATENT APPLICATION PUBLICATION
(19) INDIA
(22) Date of filing of Application :24/08/2016
(21) Application No.201617028790 A
(43) Publication Date : 20/01/2017

(54) Title of the invention : WIRELESS TAG COMMUNICATION TERMINAL AND COMMUNICATION SYSTEM

(51) International classification :H01Q21/24,G06K19/077,H01Q1/24
(31) Priority Document No :2014039565
(32) Priority Date :28/02/2014
(33) Name of priority country :Japan
(86) International Application No :PCT/JP2015/055508
Filing Date :26/02/2015
(87) International Publication No :WO 2015/129778
(61) Patent of Addition to Application Number :NA
Filing Date :NA
(62) Divisional to Application Number :NA
Filing Date :NA

(71)**Name of Applicant :**
1)MITSUBISHI HEAVY INDUSTRIES MECHATRONICS SYSTEMS LTD.
Address of Applicant :4 22 Wadamiya dori 5 chome Hyogo ku Kobe shi Hyogo 6520863 Japan
(72)**Name of Inventor :**
1)WATANABE Daisuke
2)TOMINAGA Masatoshi
3)TANAKA Masanori
4)KATO Seiki
5)MAEDA Takashi

(57) Abstract :
This wireless tag (3) is provided with an IC chip (5) a first dipole antenna (11) that is connected to a first connection point on said IC chip and receives radio waves and a second dipole antenna (12) that is connected to a second connection point on the IC chip is laid out so as to intersect the first dipole antenna and receives radio waves at the same time as the first dipole antenna. The IC chip combines a first received power generated by the first dipole antenna on the basis of the abovementioned radio waves and a second received power generated by the second dipole antenna.

No. of Pages : 34 No. of Claims : 9

(12) PATENT APPLICATION PUBLICATION
(19) INDIA
(22) Date of filing of Application :13/07/2015
(21) Application No.2102/DEL/2015 A
(43) Publication Date : 20/01/2017

(54) Title of the invention : ASPARAGUS BASED LEHYA COMPOSITION AND PROCESS OF PREPARATION THEREOF

(51) International classification	:A61K 36/00
(31) Priority Document No	:NA
(32) Priority Date	:NA
(33) Name of priority country	:NA
(86) International Application No	:NA
Filing Date	:NA
(87) International Publication No	: NA
(61) Patent of Addition to Application Number	:NA
Filing Date	:NA
(62) Divisional to Application Number	:NA
Filing Date	:NA

(71)**Name of Applicant :**
1)Director General, Defence Research and Development Organization
Address of Applicant :Ministry of Defence, Govt. of India, Room No. 348, B-Wing, DRDO Bhawan, Rajaji Marg, New Delhi- 110011, India Delhi India
(72)**Name of Inventor :**
1)GARLAPATI, Phani Kumar
2)YADAVALLI, Chandra Sekhar
3)SHARMA, Rakesh
4)NAYAKA, Mahadeva
5)ANILAKUMAR, Kandangath Raghavan

(57) Abstract :
The present disclosure provides for Asparagus based Lehya composition and process of preparation thereof. In one embodiment, the composition includes root extract of Asparagus racemosus, dashamoola, alcoholic extract of bark of Terminalia arjuna, grape fruit extract, sweetener, ghee, honey, and cardamom. In another embodiment, the process of preparing Asparagus based Lehya is disclosed where various ingredients including root extract of Asparagus, sweetener, dashamoola, alcoholic extract of bark of Terminalia arjuna, extract of grape fruit and cardamom, ghee were boiled at specific temperature and duration while getting homogenously mixed. The said Lehya has anti-fatigue and anti-stress effect. The Lehya so prepared is ready to consume, shelf stable, cost-effective, phytochemical, antioxidant rich and purely herb based.

No. of Pages : 20 No. of Claims : 9

(12) PATENT APPLICATION PUBLICATION
(21) Application No.2163/DEL/2015 A
(19) INDIA
(22) Date of filing of Application :16/07/2015
(43) Publication Date : 20/01/2017

(54) Title of the invention : GRID-FRAME AND FUNCTIONAL MODULE •

(51) International classification	:H01L 27/00
(31) Priority Document No	:NA
(32) Priority Date	:NA
(33) Name of priority country	:NA
(86) International Application No	:NA
Filing Date	:NA
(87) International Publication No	: NA
(61) Patent of Addition to Application Number	:NA
Filing Date	:NA
(62) Divisional to Application Number	:NA
Filing Date	:NA

(71)**Name of Applicant :**
1)NOVAR ED&S LIMITED
Address of Applicant :Honeywell House, Arlington Business Park, Bracknell, Berkshire RG 12 1EB, United Kingdom U.K.
(72)**Name of Inventor :**
1)VARUN MEHTA
2)ARVIND KUMAR
3)RAVINDER PAL VERMA

(57) Abstract :
A wiring device comprising a grid-frame and a functional module, the grid-frame having an opening in which the functional module is received. The opening in the grid-frame is substantially square and the grid-frame comprises an attachment feature for use in holding the functional module in the grid-frame, the attachment feature being located along all sides of the opening, such that the functional module can be received, and held, in the opening in any of four mutually perpendicular orientations.

No. of Pages : 24 No. of Claims : 14

(12) PATENT APPLICATION PUBLICATION
(19) INDIA
(22) Date of filing of Application :13/05/2015
(21) Application No.1334/DEL/2015 A
(43) Publication Date : 20/01/2017

(54) Title of the invention : ANTI THEFT SECURITY SYSTEM IN VEHICLES

(51) International classification :B60R25/04
(31) Priority Document No :NA
(32) Priority Date :NA
(33) Name of priority country :NA
(86) International Application No :NA
Filing Date :NA
(87) International Publication No : NA
(61) Patent of Addition to Application Number :NA
Filing Date :NA
(62) Divisional to Application Number :NA
Filing Date :NA

(71)**Name of Applicant :**
1)DIRECTOR DRONACHARYA GROUP OF INSTITUTIONS
Address of Applicant :B-27, KNOWLEDGE PARK III, GREATER NOIDA-201308 Uttar Pradesh India
(72)**Name of Inventor :**
1)D.V. BHISE
2)ASHWANI KUMAR
3)ANKUSH YADAV
4)ANURAG SHARMA
5)ADITYA KUMAR

(57) Abstract :
These days car security is increasing every day. This project focuses on the prevention of vehicles from theft by implementing an anti-theft system which could be an effective solution. This system focuses on switching off the ignition system when there is any type of theft attempt on the vehicle. It also reduces the rate of accidents which is caused when driver is drunk. Microcontrollers along with GSM Systems are used for transmission of messages and cut off of ignition system. Location of the accident site can also be mapped with the help of GPS. One of the unique feature is prevention of crash when the car is being driven in reverse mode. Depending upon the position of the car at the back sensors will operate and stop the car.

No. of Pages : 6 No. of Claims : 6

(12) PATENT APPLICATION PUBLICATION
(19) INDIA
(22) Date of filing of Application :11/08/2016
(21) Application No.201617027520 A
(43) Publication Date : 20/01/2017

(54) Title of the invention : SYSTEMS AND METHODS FOR IDENTIFYING TALENT

(51) International classification :G06Q50/10,G06Q50/30
(31) Priority Document No :14/156451
(32) Priority Date :16/01/2014
(33) Name of priority country :U.S.A.
(86) International Application No :PCT/US2015/011648
Filing Date :15/01/2015
(87) International Publication No :WO 2015/109119
(61) Patent of Addition to Application Number :NA
Filing Date :NA
(62) Divisional to Application Number :NA
Filing Date :NA

(71)**Name of Applicant :**
1)YOU ROCK MEDIA GROUP INC.
Address of Applicant :13 Prosperity Drive Sparta NJ 07871 U.S.A.
(72)**Name of Inventor :**
1)CIOFFI Dominic Gerard
2)CONNELLY Joseph George
3)DAMICO Dennis John
4)KRAUS Bonnie Elaine
5)LOVERRO Robert Joseph
6)PASSALACQUA Mark Edward

(57) Abstract :
Systems and methods for identifying talent that eliminate or minimize the costs and/or risks of identifying such talent involve public feedback and generate significant charitable donations. In one aspect of the present invention talent s or bands songs are made available to critics such as members of the public via mediums such as the Internet radio and television. Such individuals provide feedback during successive phases of the talent identification process and talents and/or bands with the greatest public appeal advance to the final stages of the process. Ultimately the talent or band receiving the most favorable feedback is promoted or awarded with for example a record deal. Throughout the process revenue is generated via a variety of methods including voting/critiquing fees advertising sale of promotional items and the like. In some aspects of the present invention at least a portion of such revenue is donated to charity.

No. of Pages : 76 No. of Claims : 18

(12) PATENT APPLICATION PUBLICATION
(21) Application No.2104/DEL/2015 A
(19) INDIA
(22) Date of filing of Application :13/07/2015
(43) Publication Date : 20/01/2017

(54) Title of the invention : A DISPERSING AGENT COMPOSITION FOR TANNING OF HIDES/SKINS AND A PROCESS FOR THE PREPARATION THEREOF

(51) International classification	:C14C 3/00
(31) Priority Document No	:NA
(32) Priority Date	:NA
(33) Name of priority country	:NA
(86) International Application No	:NA
Filing Date	:NA
(87) International Publication No	: NA
(61) Patent of Addition to Application Number	:NA
Filing Date	:NA
(62) Divisional to Application Number	:NA
Filing Date	:NA

(71)**Name of Applicant :**
1)COUNCIL OF SCIENTIFIC & INDUSTRIAL RESEARCH
Address of Applicant :ANUSANDHAN BHAWAN, RAFI MARG, NEW DELHI - 110 001, INDIA Delhi India
(72)**Name of Inventor :**
1)CHELLAPPA MURALIDHARAN

(57) Abstract :
Disclosed herein is a dispersing agent composition essentially comprising polyalkalene polyhydric compound, carbonyl and/or hydroxyl functionality compound and surfactant. The composition finds application in leather processing industry for tanning without adding any water or any other medium. It finds tremendous application potential in the tanning industry to ensure eco-benign leather processing that does not add to environmental pollution as no effluent is generated. The invention is therefore envisaged to play a crucial role in enhancing the economic and environmental benefits associated with tanning industry. The disclosure also relates to a process for preparing the composition and also the process of eco-benign tanning using the said composition.

No. of Pages : 11 No. of Claims : 7

(12) PATENT APPLICATION PUBLICATION
(21) Application No.2106/DEL/2015 A
(19) INDIA
(22) Date of filing of Application :13/07/2015
(43) Publication Date : 20/01/2017

(54) Title of the invention : A METHOD FOR IN-GEL VISUAL DETECTION OF BIOANALYTES

(51) International classification	:C12Q 1/00	(71)**Name of Applicant :**
(31) Priority Document No	:NA	**1)COUNCIL OF SCIENTIFIC & INDUSTRIAL RESEARCH**
(32) Priority Date	:NA	Address of Applicant :ANUSANDHAN BHAWAN, RAFI MARG, NEW DELHI - 110 001, INDIA Delhi India
(33) Name of priority country	:NA	
(86) International Application No	:NA	(72)**Name of Inventor :**
Filing Date	:NA	**1)SAYAM SEN GUPTA**
(87) International Publication No	: NA	**2)SUSHMA KUMARI**
(61) Patent of Addition to Application Number	:NA	**3)CHAKADOLA PANDA**
Filing Date	:NA	
(62) Divisional to Application Number	:NA	
Filing Date	:NA	

(57) Abstract :
The present invention relates to a method for in-gel visual detection and quantitative detection of proteins in activity based protein profiling (ABPP) using horseradish peroxidase mimic FeIII-TAML complex of ligand as a catalytic probe. The invention further relates to kit comprising compounds of formula (I) and method for the detection of bioanalytes using kit comprising compounds of formula (I).

No. of Pages : 30 No. of Claims : 10

(12) PATENT APPLICATION PUBLICATION
(19) INDIA
(22) Date of filing of Application :16/07/2015
(21) Application No.2167/DEL/2015 A
(43) Publication Date : 20/01/2017

(54) Title of the invention : A PROCESS FOR ELECTROCHEMICAL POLYMERIZATION ONTO FABRICS

(51) International classification	:D06P 5/00
(31) Priority Document No	:NA
(32) Priority Date	:NA
(33) Name of priority country	:NA
(86) International Application No	:NA
Filing Date	:NA
(87) International Publication No	: NA
(61) Patent of Addition to Application Number	:NA
Filing Date	:NA
(62) Divisional to Application Number	:NA
Filing Date	:NA

(71)**Name of Applicant :**
1)INDIAN INSTITUTE OF TECHNOLOGY DELHI
Address of Applicant :Hauz Khas, New Delhi 110 016, (India). Delhi India
(72)**Name of Inventor :**
1)SEN, Kushal
2)DAS, Dipayan
3)MAITI, Syamal

(57) Abstract :
The present invention provides a process for electrochemical polymerization onto fabric, the process comprising pretreating a fabric, padding the pretreated fabric with a solution of a metal salt and carrying out an in situ electrochemical polymerization of the metal salt treated fabric with a monomer in a supporting electrolyte solution to obtain an electrochemically polymerized fabric. The present invention provides a single-stage process for rapid and uniform in situ electrochemical polymerization onto fabric.

No. of Pages : 22 No. of Claims : 13

(12) PATENT APPLICATION PUBLICATION
(21) Application No.1381/DEL/2014 A
(19) INDIA
(22) Date of filing of Application :23/05/2014
(43) Publication Date : 20/01/2017

(54) Title of the invention : SYSTEM AND METHOD FOR DATA TRANSFER AMONG THE DEVICES

(51) International classification	:H04L 63/0853
(31) Priority Document No	:NA
(32) Priority Date	:NA
(33) Name of priority country	:NA
(86) International Application No	:NA
Filing Date	:NA
(87) International Publication No	: NA
(61) Patent of Addition to Application Number	:NA
Filing Date	:NA
(62) Divisional to Application Number	:NA
Filing Date	:NA

(71)**Name of Applicant :**
1)Samsung India Electronics Pvt Ltd.
Address of Applicant :Logix Cyber Park Tower C 8th to 10th floor, Tower D, Ground to 10th floor, Plot No.C - 28-29, Sector - 62, Noida-201301 (U.P), India Uttar Pradesh India
(72)**Name of Inventor :**
1)Ashish Kumar Jha
2)Santhanasamy A

(57) Abstract :
The embodiments herein provide a method and system dynamically synchronizing a data item between one or more first devices and one or more second devices. Further, the method includes identifying a change in the data item in the one or more first devices, where each data item can be associated with the one or more second devices. Further, the method includes dynamically creating a data set including the changed data item separately for each of the second device associated with the changed data item. Further, the method includes transferring the data set to the second device without sending any request message from the second device. Furthermore, the method includes efficiently handling changing connections, initial setups, and maintaining state of one or more first devices with one or more second devices when any of the paired second devices for the data item or set of data items are added or removed. FIG. 11

No. of Pages : 85 No. of Claims : 18

(12) PATENT APPLICATION PUBLICATION
(21) Application No.2117/DEL/2015 A
(19) INDIA
(22) Date of filing of Application :14/07/2015
(43) Publication Date : 20/01/2017

(54) Title of the invention : MULTIFUNCTIONAL LIVE DASK FLAG-MY PRIDE FLAG

(51) International classification	:G09F 17/00
(31) Priority Document No	:NA
(32) Priority Date	:NA
(33) Name of priority country	:NA
(86) International Application No	:NA
Filing Date	:NA
(87) International Publication No	: NA
(61) Patent of Addition to Application Number	:NA
Filing Date	:NA
(62) Divisional to Application Number	:NA
Filing Date	:NA

(71)**Name of Applicant :**
1)NARAYAN BHARDWAJ
Address of Applicant :105,NIRALA NAGAR, NAYA GAON MAIN ROAD RATLAM MP (457001) Madhya Pradesh India
2)BALRAM BHARDWAJ
(72)**Name of Inventor :**
1)NARAYAN BHARDWAJ
2)BALRAM BHARDWAJ

(57) Abstract :
Hosting of national flag in workplace, houses and private places shows pride, patriotism and affection of any individual towards their nation. Desk Flag/ rable ·flag and other miniature flags are the example of flags which are used to show the respect towards nation. Presence of national desk flag also shows or private office. But non functional desk flag does not seems good as it sometime de-motivates the user by providing signs of passivism and stability. That is why MY PRIDE FLAG comes into existence which contains continuously weaving flag along with numerous features which motivates the user, shows prosperity and technological advancement of the nation and also serves as personal mqltifunctiona} gadget. By installing my pride flag one can easily show its patriotism/ respect towards nation whereas get benefits such as motivation, positivity which enhances work efficiency. My Pride Flag in real sense can be described as a gadget which is capable to emerge as multifunctional personal system which shows patriotism and. progressive attitude and prosperity.

No. of Pages : 6 No. of Claims : 2

(12) PATENT APPLICATION PUBLICATION
(21) Application No.201617032739 A
(19) INDIA
(22) Date of filing of Application :26/09/2016
(43) Publication Date : 20/01/2017

(54) Title of the invention : FOAM DISPENSING PUMP WITH COMPRESSIBLE AIR INLET CHAMBER FOR PROVIDING RESIDUAL SUCK BACK

(51) International classification :A47K5/14,B05B7/00,B05B11/00
(31) Priority Document No :61/980235
(32) Priority Date :16/04/2014
(33) Name of priority country :U.S.A.
(86) International Application No :PCT/US2015/026079
Filing Date :16/04/2015
(87) International Publication No :WO 2015/161018
(61) Patent of Addition to Application Number :NA
Filing Date :NA
(62) Divisional to Application Number :NA
Filing Date :NA

(71)**Name of Applicant :**
1)GOJO INDUSTRIES INC.
Address of Applicant :One Gojo Plaza Suite 500 Akron OH 44309 U.S.A.
(72)**Name of Inventor :**
1)HARRIS Donald R.

(57) Abstract :
Exemplary dispensers pumps and refill units are disclosed herein. An exemplary refill unit includes a container and a foam pump. The foam pump includes a liquid pump chamber a compressible air inlet chamber and a compressed air inlet. The volume of the compressible air inlet chamber is less than the volume of air used to make a dose of foam. A one way air inlet valve is located proximate the compressed air inlet. A piston is included that is movable within the liquid pump chamber and has a liquid seal member and an air seal member. The liquid pump chamber includes a liquid outlet into a center portion of the piston. One or more openings extend through the piston wall and provide a passage from the compressible air chamber to the center portion of the piston. The pump further includes mix media and an outlet.

No. of Pages : 9 No. of Claims : 20

(12) PATENT APPLICATION PUBLICATION
(19) INDIA
(22) Date of filing of Application :26/09/2016
(21) Application No.201617032740 A
(43) Publication Date : 20/01/2017

(54) Title of the invention : DURABLE AND SCRATCH RESISTANT ANTI REFLECTIVE ARTICLES

(51) International classification :C03C17/34,G02B1/115,C03C21/00
(31) Priority Document No :61/991656
(32) Priority Date :12/05/2014
(33) Name of priority country :U.S.A.
(86) International Application No :PCT/US2015/030116
Filing Date :11/05/2015
(87) International Publication No :WO 2016/018490
(61) Patent of Addition to Application Number :NA
Filing Date :NA
(62) Divisional to Application Number :NA
Filing Date :NA

(71)**Name of Applicant :**
1)CORNING INCORPORATED
Address of Applicant :1 Riverfront Plaza Corning New York 14831 U.S.A.
(72)**Name of Inventor :**
1)HART Shandon Dee
2)KOCH Karl William III
3)PAULSON Charles Andrew
4)PRICE James Joseph

(57) Abstract :
Embodiments of durable anti reflective articles are described. In one or more embodiments the article includes a substrate and an optical coating disposed on the major surface. The optical coating includes an anti reflective coating and a scratch resistant coating forming an anti reflective surface. The article exhibits a maximum hardness of 12 GPa or greater as measured on the anti reflective surface by a a Berkovich Indenter Hardness Test along an indentation depth of about 100 nm or greater. The articles of some embodiments exhibit a single side average light reflectance measured at the anti reflective surface of about 8% or less over an optical wavelength regime in the range from about 400 nm to about 800 nm and a reference point color shift in transmittance or reflectance of less than about 2. In some embodiments the article exhibits an angular color shift of about 5 or less at all angles from normal incidence to an incident illumination angle that is 20 degrees or greater.

No. of Pages : 80 No. of Claims : 30

(12) PATENT APPLICATION PUBLICATION
(19) INDIA
(22) Date of filing of Application :26/09/2016

(21) Application No.201617032741 A
(43) Publication Date : 20/01/2017

(54) Title of the invention : CARD EDGE CONNECTOR FOR AN IMAGING SENSOR

(51) International classification :A61B1/06
(31) Priority Document No :61/968959
(32) Priority Date :21/03/2014
(33) Name of priority country :U.S.A.
(86) International Application No :PCT/US2015/022080
Filing Date :23/03/2015
(87) International Publication No :WO 2015/143453
(61) Patent of Addition to Application Number :NA
Filing Date :NA
(62) Divisional to Application Number :NA
Filing Date :NA

(71)**Name of Applicant :**
1)DEPUY SYNTHES PRODUCTS INC.
Address of Applicant :325 Paramount Drive Raynham MA 02767 U.S.A.
(72)**Name of Inventor :**
1)HENLEY Jeremiah D.
2)BLANQUART Laurent
3)DEAN Brian

(57) Abstract :
The disclosure extends to devices systems and methods for connecting one or more sensors to one or more printed circuit boards (PCB) in the distal end or tip of a scope. The disclosure also extends to a connector assembly for an image sensor for protecting the sensor and conveying information from the sensor to the PCB.

No. of Pages : 11 No. of Claims : 30

(12) PATENT APPLICATION PUBLICATION
(19) INDIA
(22) Date of filing of Application :26/09/2016
(21) Application No.201617032742 A
(43) Publication Date : 20/01/2017

(54) Title of the invention : AMIDO SUBSTITUTED AZOLE COMPOUNDS AS INHIBITORS OF TNKS1 AND/OR TNKS2

(51) International classification :C07D233/90,A61K31/4164,A61K31/4439
(31) Priority Document No :14163261.2
(32) Priority Date :02/04/2014
(33) Name of priority country :EPO
(86) International Application No :PCT/EP2015/057167
Filing Date :01/04/2015
(87) International Publication No :WO 2015/150449
(61) Patent of Addition to Application Number :NA
Filing Date :NA
(62) Divisional to Application Number :NA
Filing Date :NA

(71)**Name of Applicant :**
1)BAYER PHARMA AKTIENGESELLSCHAFT
Address of Applicant :M¼llerstr. 178 13353 Berlin Germany
(72)**Name of Inventor :**
1)EIS Knut
2)ACKERSTAFF Jens
3)WAGNER Sarah
4)BASTING Daniel
5)GOLZ Stefan
6)BENDER Eckhard
7)LI Volkhart Min Jian
8)LIENAU Philip
9)LIU Ningshu
10)SIEGEL Franziska
11)BAUSER Marcus
12)SLZLE Detlev
13)HOLTON Simon
14)BAIRLEIN Michaela
15)BUCHGRABER Philipp
16)B • LINT J³zsef

(57) Abstract :
The present invention relates to amido substituted azole compounds of general formula (I) in which X X R R R R Rand R are as defined in the claims which are inhibitors of TNKS1 and/or TNKS2 to methods of preparing said compounds to intermediate compounds useful for preparing said compounds to pharmaceutical compositions and combinations comprising said compounds and to the use of said compounds for manufacturing a pharmaceutical composition for the treatment or prophylaxis of a disease in particular of neoplasms as a sole agent or in combination with other active ingredients.

No. of Pages : 561 No. of Claims : 26

(12) PATENT APPLICATION PUBLICATION
(19) INDIA
(22) Date of filing of Application :22/09/2016
(21) Application No.201617032423 A
(43) Publication Date : 20/01/2017

(54) Title of the invention : POLYMER FIBRE HAVING IMPROVED DISPERSIBILITY

(51) International classification :D01F6/92,D01F6/62,D01F1/10
(31) Priority Document No :10 2014 004 928.0
(32) Priority Date :07/04/2014
(33) Name of priority country :Germany
(86) International Application No :PCT/EP2015/055966
Filing Date :20/03/2015
(87) International Publication No :WO 2015/154971
(61) Patent of Addition to Application Number :NA
Filing Date :NA
(62) Divisional to Application Number :NA
Filing Date :NA

(71)**Name of Applicant :**
1)TREVIRA GMBH
Address of Applicant :Max Fischer Strae 11 86399 Bobingen Germany
(72)**Name of Inventor :**
1)DAHRINGER Jrg
2)KLANERT Michael
3)HESSE Thomas

(57) Abstract :
The invention relates to a polymer fibre having improved dispersibility and to the use thereof. The polymer fibre of the invention comprises at least one synthetic polymer and 0.1% and 20% by weight of a silicone. The polymer that forms the fibre forms a solid dispersion medium at room temperature (25°C) for the silicone which is likewise in solid form at room temperature (25°C) which forms the more disperse phase. The polymer fibre of the invention has improved dispersibility and is thus suitable for production of aqueous suspensions which are used for example in the formation of textile fabrics for example nonwovens.

No. of Pages : 17 No. of Claims : 15

(12) PATENT APPLICATION PUBLICATION
(19) INDIA
(22) Date of filing of Application :15/07/2015
(21) Application No.2144/DEL/2015 A
(43) Publication Date : 20/01/2017

(54) Title of the invention : ABSORBENT PANTS

(51) International classification	:A61F 13/00
(31) Priority Document No	:NA
(32) Priority Date	:NA
(33) Name of priority country	:NA
(86) International Application No	:NA
Filing Date	:NA
(87) International Publication No	: NA
(61) Patent of Addition to Application Number	:NA
Filing Date	:NA
(62) Divisional to Application Number	:NA
Filing Date	:NA

(71)**Name of Applicant :**
1)CHEN,CHIEN-CHUNG
Address of Applicant :5F.,NO.209, SEC.2, YONGHE RD., YONGHE DIST., NEW TAIPEI CITY, TAIWAN Taiwan
(72)**Name of Inventor :**
1)KUO,SHIH HUEY

(57) Abstract :
The pants has two zippers symmetrically arranged from a waistbands front center extend slantwise downward to a lateral side of the pants. A detachable wrapping member is integrated with the pants. The wrapping member has a belt whose two ends thread through corresponding loops at bottom comers of the wrapping member, and a bottom portion of the wrapping member is flipped upward to reliably cover a crotch area of a user, preventing excrement or urine from overflowing. A clamping member uses Velcro fastening elements or snap buttons to lock a planar object of an absorbent member, and the clamping member can provide secured positioning, increased friction, and load distribution so that the absorbent member can be reliably worn. The clamping member contains a clamping element that is concealed when not in use. The clamping element then can be flipped to further secure its locking the absorbent member.

No. of Pages : 24 No. of Claims : 10

(12) PATENT APPLICATION PUBLICATION
(21) Application No.2139/DEL/2015 A
(19) INDIA
(22) Date of filing of Application :15/07/2015
(43) Publication Date : 20/01/2017

(54) Title of the invention : MD MARKER

(51) International classification	:B43K 8/00	
(31) Priority Document No	:NA	
(32) Priority Date	:NA	
(33) Name of priority country	:NA	
(86) International Application No	:NA	
Filing Date	:NA	
(87) International Publication No	: NA	
(61) Patent of Addition to Application Number	:NA	
Filing Date	:NA	
(62) Divisional to Application Number	:NA	
Filing Date	:NA	

(71)**Name of Applicant :**
1)KUMAR SUMIT
Address of Applicant :GANPTI FASHION, LANE NO. 3, CLEMENT TOWN, DEHRADUN UTTARAKHAND 248002 Uttarakhand India
2)DHIMAN VISHAL
(72)**Name of Inventor :**
1)KUMAR SUMIT
2)DHIMAN VISHAL

(57) Abstract :
The utility model discloses a bicolor whiteboard marker with an ink storage chamber and transparent strip. A Whiteboard marker has a body, Both (any two color) colors of nib is located parallel in one side, two refill, a little chamber (ink storage portion), two transparent strips, a cap and four bolts. A ink storage chamber (length=2.6cm) of same diameter of the marker is attached at the upper end of the marker pole. Transparent strip shows ·quantity of ink available in the storage portion. It is more etlicient due to two in this single marker.· Ink refilling is ·easy to master, operation is simple, time . and labor · efficient, and use is convenient.

No. of Pages : 13 No. of Claims : 3

(12) PATENT APPLICATION PUBLICATION
(21) Application No.201617032251 A
(19) INDIA
(22) Date of filing of Application :21/09/2016
(43) Publication Date : 20/01/2017

(54) Title of the invention : SURGICAL INSTRUMENT COMPRISING A ROTATABLE SHAFT

(51) International classification :A61B17/072
(31) Priority Document No :14/226125
(32) Priority Date :26/03/2014
(33) Name of priority country :U.S.A.
(86) International Application No :PCT/US2015/020103
Filing Date :12/03/2015
(87) International Publication No :WO 2015/148141
(61) Patent of Addition to Application Number :NA
Filing Date :NA
(62) Divisional to Application Number :NA
Filing Date :NA

(71)**Name of Applicant :**
1)ETHICON ENDO SURGERY INC.
Address of Applicant :4545 Creek Road Cincinnati Ohio 45242 U.S.A.
(72)**Name of Inventor :**
1)LEIMBACK Richard L.
2)BECKMAN Andrew T.
3)SCHULTZ Darwin L.
4)ADAMS Shane R.

(57) Abstract :
Various electrical and slip ring connector arrangements configured to facilitate the passage of electrical current and signals between two components that are rotatable relative to each other such as an interchangeable surgical shaft assembly that includes portions that are rotatable relative to fixed mounting portions.

No. of Pages : 91 No. of Claims : 20

(12) PATENT APPLICATION PUBLICATION
(21) Application No.2142/DEL/2015 A
(19) INDIA
(22) Date of filing of Application :15/07/2015
(43) Publication Date : 20/01/2017

(54) Title of the invention : SOLAR SELECTIVE COATING FOR SOAR ENERGY COLLETOR / ABSORBER TUBES WITH IMPROVED PERFORMANCE AND A METHOD OF PRODUCING THE SAME

(51) International classification	:H01L 31/00
(31) Priority Document No	:NA
(32) Priority Date	:NA
(33) Name of priority country	:NA
(86) International Application No	:NA
Filing Date	:NA
(87) International Publication No	: NA
(61) Patent of Addition to Application Number	:NA
Filing Date	:NA
(62) Divisional to Application Number	:NA
Filing Date	:NA

(71)**Name of Applicant :**
1)INTERNATIONAL ADVANCED RESEARCH CENTRE FOR POWER METALLURGY AND NEW MATERIALS(ARCI)
Address of Applicant :PLOT NO-102, INSTITUTIONAL AREA,SECTOR-44 GURGAON-122003, HARYANA,IDIA Haryana India
(72)**Name of Inventor :**
1)SHANMUGASUNDARAM SAKTHIVEL
2)MADIWALA SHIVA PRASAD
3)SHRIKANT VISHWANATH JOSHI

(57) Abstract :
The invention discloses an improved nanoporous composite solar selective absorber coating with an antireflective layer with protective property and another antireflective layer having an excellent optical absorptance with a solar absorptance (>95%), low thermal emissive property (0.09-0.19) at 100 to 300°C, excellent corrosion resistant property to withstand acceleration corrosion test, >200hrs and thermal stability at a temperature up to 300°C capable of coating on stainless steel substrate (1a) comprisinga) a solar selective absorber layer (2a), having a nanoporous composite oxide layer consisting of Cr, Mn and Fe; b) an antireflective layer with protective property (1st antireflective layer, 3a) consisting of material selected from Si02-Zr02 solgel nanocomposite deposited over the said solar absorber layer (2a); and c) another antireflective layer (2nd antireflective layer, 4a or 4b) consisting of material selected from SiC>2 nanoparticles having spherical shape (4a); nanoporous MgF2 nanoparticles having hexagonal shape (4b). It also discloses a method of producing said coating for solar energy collector / absorber tubes.

No. of Pages : 46 No. of Claims : 17

(12) PATENT APPLICATION PUBLICATION
(19) INDIA
(22) Date of filing of Application :16/07/2015
(21) Application No.2164/DEL/2015 A
(43) Publication Date : 20/01/2017

(54) Title of the invention : METHOD AND APPARATUS FOR SYNCHRONIZATION IN A NETWORK

(51) International classification	:H04J 3/06
(31) Priority Document No	:NA
(32) Priority Date	:NA
(33) Name of priority country	:NA
(86) International Application No	:NA
Filing Date	:NA
(87) International Publication No	: NA
(61) Patent of Addition to Application Number	:NA
Filing Date	:NA
(62) Divisional to Application Number	:NA
Filing Date	:NA

(71)**Name of Applicant :**
1)Samsung Electronics Co., Ltd.
Address of Applicant :416 Maetan-Dong, Yeongtong-GU, Suwon-SI, Gyeonggi-do 442-742, Republic of Korea Republic of Korea
(72)**Name of Inventor :**
1)SRIVASTAVA, Hemanshu
2)SINGH, Avinash

(57) Abstract :
The present invention provides method and apparatus (200, 400) for causing synchronization of at least one connected device by a source device. The apparatus is adapted to perform the method comprising: receiving at least one delay information with respect to at least one connected device that is adapted to process at least one type of data; calculating at least one delay value based on said at least one delay information; and causing synchronization of said least one connected device based on said at least one delay value thus calculated.

No. of Pages : 60 No. of Claims : 31

(12) PATENT APPLICATION PUBLICATION
(21) Application No.2165/DEL/2015 A
(19) INDIA
(22) Date of filing of Application :16/07/2015
(43) Publication Date : 20/01/2017

(54) Title of the invention : TISSUE AND MUSCLE TIGHTENING COMPOSITION

(51) International classification	:A61K 36/00	(71)**Name of Applicant :**
(31) Priority Document No	:NA	**1)BALI, Sumeet**
(32) Priority Date	:NA	Address of Applicant :EC-16, C Block, Inderpuri, New Delhi 110012. INDIA Delhi India
(33) Name of priority country	:NA	**2)GOEL, Sanjeev**
(86) International Application No	:NA	(72)**Name of Inventor :**
Filing Date	:NA	**1)BALI, Sumeet**
(87) International Publication No	: NA	**2)GOEL, Sanjeev**
(61) Patent of Addition to Application Number	:NA	
Filing Date	:NA	
(62) Divisional to Application Number	:NA	
Filing Date	:NA	

(57) Abstract :
The present invention discloses a herbal formulation for rejuvenating the aging tissues and muscles of the mammalian body. The present innovative herbal formulation is adapted to provide a toning effect to the human body. Specifically, the present herbal formulation is useful to tone the human body™s tissues and muscles. More specifically, the present formulation is useful to tighten the sagging and loosened parts of the human body such as breasts, buttocks, thighs, upper arm, and hips.

No. of Pages : 16 No. of Claims : 10

(12) PATENT APPLICATION PUBLICATION
(19) INDIA
(22) Date of filing of Application :15/07/2015
(21) Application No.2153/DEL/2015 A
(43) Publication Date : 20/01/2017

(54) Title of the invention : FREE SPACE OPTICAL COMMUNICATION SYSTEM APPARATUS AND A METHOD THEREOF

(51) International classification	:G01M 11/00
(31) Priority Document No	:NA
(32) Priority Date	:NA
(33) Name of priority country	:NA
(86) International Application No	:NA
Filing Date	:NA
(87) International Publication No	: NA
(61) Patent of Addition to Application Number	:NA
Filing Date	:NA
(62) Divisional to Application Number	:NA
Filing Date	:NA

(71)**Name of Applicant :**
1)THE SECRETARY, DEPARTMENT OF ELECTRONICS AND INFORMATION TECHNOLOGY (DEITY)
Address of Applicant :Ministry of Communications and Information Technology, 6, CGO Complex, Lodhi Road, New Delhi - 110003, India Delhi India
2)INDIAN INSTITUTE OF TECHNOLOGY GUWAHATI
(72)**Name of Inventor :**
1)BORUAH, Bosanta Ranjan
2)KONWAR, Santanu

(57) Abstract :
The present invention provides a free space optical communication system that uses orthogonal modes of aberration in a laser beam as means for encoding the information. The system comprises a transmission station which transmits the user defined information in terms of the amplitudes of certain orthogonal aberration modes present in the transmitted beam. The beam then travels through free space before it reaches the receiving station. The receiving station comprises a high speed wavefront sensor of light beams. The wavefront sensor measures the amplitudes of various orthogonal aberration modes present in the incident beam at different instants of time. The amplitudes of the orthogonal modes at a certain regular time interval are then used to extract the user information.

No. of Pages : 34 No. of Claims : 31

(12) PATENT APPLICATION PUBLICATION
(21) Application No.2161/DEL/2015 A
(19) INDIA
(22) Date of filing of Application :16/07/2015
(43) Publication Date : 20/01/2017

(54) Title of the invention : SOLAR AND VISIBLE LIGHT DRIVEN PHOTOCATALYST FOR WATER SPLITTING AND OXYGEN PRODUCTION THEREOF

(51) International classification	:B01J 35/00
(31) Priority Document No	:NA
(32) Priority Date	:NA
(33) Name of priority country	:NA
(86) International Application No	:NA
Filing Date	:NA
(87) International Publication No	: NA
(61) Patent of Addition to Application Number	:NA
Filing Date	:NA
(62) Divisional to Application Number	:NA
Filing Date	:NA

(71)**Name of Applicant :**
1)COUNCIL OF SCIENTIFIC & INDUSTRIAL RESEARCH
Address of Applicant :ANUSANDHAN BHAWAN, RAFI MARG, NEW DELHI - 110 001, INDIA. Delhi India
(72)**Name of Inventor :**
1)CHINNAKONDA SUBRAMANIAN GOPINATH
2)ANJANI JAI PRAKASH DUBEY

(57) Abstract :
The present invention relates to a solar and visible light driven photocatalyst for water splitting and oxygen production thereof. More particularly, the present invention relates to a photocatalyst comprising a solid solution of transition metals preferably cerium:titanium in the ratio of 90:10 to 99:1 and titanium is in the lattice of ceria which is used for water splitting and oxygen production, in the presence or absence of sacrificial Fe3+ source.

No. of Pages : 28 No. of Claims : 7

(12) PATENT APPLICATION PUBLICATION
(19) INDIA
(22) Date of filing of Application :16/07/2015
(21) Application No.2162/DEL/2015 A
(43) Publication Date : 20/01/2017

(54) Title of the invention : IRON-COBALT BASED HIGH INDUCTION SOFT MAGNETIC AMORPHOUS ALLOYS

(51) International classification	:H01F 1/00
(31) Priority Document No	:NA
(32) Priority Date	:NA
(33) Name of priority country	:NA
(86) International Application No	:NA
Filing Date	:NA
(87) International Publication No	: NA
(61) Patent of Addition to Application Number	:NA
Filing Date	:NA
(62) Divisional to Application Number	:NA
Filing Date	:NA

(71)**Name of Applicant :**
1)COUNCIL OF SCIENTIFIC & INDUSTRIAL RESEARCH
Address of Applicant :ANUSANDHAN BHAWAN,2 RAFI MARG, NEW DELHI -110001, INDIA. Delhi India
(72)**Name of Inventor :**
1)ROY RAJAT KUMAR
2)PANDA ASHIS KUMAR
3)SINGH ABHISHEK KUMAR
4)MAHATO BHUPESHWAR
5)MITRA AMITAVA

(57) Abstract :
The present invention relates to the development of IcCo-bascd high induction soft magnetic amoiphous alloys. It particularity relates to the preparation of rapidly solidified iron-cobalt based alloys with high saturation induction and soft magnetic properties. Recently, Fc-based soft magnetic alloys showed saturation magnetic flux density within the ranges of 1.24 - 1-.58T, however, their Curie temperatures and thermal stability are very low. it restricts their applications at high temperature. Therefore, it is necessary to develop the new high induction alloys with the combinations of superior soft magnetic properties and high temperature magnetic properties. This invention will be useful for application in transformer core.

No. of Pages : 20 No. of Claims : 9

(12) PATENT APPLICATION PUBLICATION
(21) Application No.2155/DEL/2015 A
(19) INDIA
(22) Date of filing of Application :15/07/2015
(43) Publication Date : 20/01/2017

(54) Title of the invention : NEWMASS- NATIONAL ECONOMY AND WEALTH MANAGEMENT, ACCOUNTING AND SURVEILLANCE SYSTEM

(51) International classification	:G06Q 40/00
(31) Priority Document No	:NA
(32) Priority Date	:NA
(33) Name of priority country	:NA
(86) International Application No	:NA
Filing Date	:NA
(87) International Publication No	: NA
(61) Patent of Addition to Application Number	:NA
Filing Date	:NA
(62) Divisional to Application Number	:NA
Filing Date	:NA

(71)**Name of Applicant :**
1)Manish Chandra Kaushik
Address of Applicant :Manish Chandra Kaushik S/O Shri Paras Chand Village- Yashwantpur Post- Malhanpar Dist- Gorakhpur State- Uttar Pradesh Pin code- 273403 Uttar Pradesh India
(72)**Name of Inventor :**
1)Manish Chandra Kaushik

(57) Abstract :
There is an utmost requirement of developing a system which is impervious to any kind of manipulation. If we depend on honesty and other moral virtues of people, we may be subject to corruption. What if one cannot do anything wrong even if one want to do it. The proposition encompasses inability of human being to indulge in anything wrong. Thus, only best practices and trends can be implemented. I am harnessing information technology to develop a system which can eliminate all kind of mal-practices and vices and establish an utopian state in the country that implements this system.

No. of Pages : 22 No. of Claims : 7

(12) PATENT APPLICATION PUBLICATION
(21) Application No.2172/DEL/2015 A
(19) INDIA
(22) Date of filing of Application :17/07/2015
(43) Publication Date : 20/01/2017

(54) Title of the invention : SYSTEM AND METHOD FOR CONDUCTING FINANCIAL TRANSACTIONS

(51) International classification	:G06Q 40/00	(71)**Name of Applicant :**
(31) Priority Document No	:NA	**1)JINDAL, Atul**
(32) Priority Date	:NA	Address of Applicant :Spa/2-201, Jaypee Greens, Greater Noida - 201310, India. Uttar Pradesh India
(33) Name of priority country	:NA	**2)JINDAL, Nitu**
(86) International Application No	:NA	(72)**Name of Inventor :**
Filing Date	:NA	**1)JINDAL, Atul**
(87) International Publication No	: NA	**2)JINDAL, Nitu**
(61) Patent of Addition to Application Number	:NA	
Filing Date	:NA	
(62) Divisional to Application Number	:NA	
Filing Date	:NA	

(57) Abstract :
Proposed system relates to withdrawal of amount from a non-account holding bank and includes a transaction initiation sub-system that is configured with an account-holding bank where an initiator has an account, wherein the sub-system is configured to enable the initiator to initiate a transaction and receive, from the initiator, a combination of amount to be disbursed from the non-account holding bank where beneficiary of the amount does not have a bank account, an authentication parameter of the initiator, and details of the non-account holding bank. Sub-system is also configured to send, to the initiator, a unique transaction code for the transaction and enable the beneficiary to be communicated the unique transaction code. System can further include a disbursement sub-system that is configured with the non-account holding bank, and is configured to receive, from the beneficiary, the unique transaction code and an authentication parameter of the beneficiary, based on which the non-account holding bank can disburse the amount to the beneficiary.

No. of Pages : 40 No. of Claims : 9

(12) PATENT APPLICATION PUBLICATION
(21) Application No.201617029570 A
(19) INDIA
(22) Date of filing of Application :30/08/2016
(43) Publication Date : 20/01/2017

(54) Title of the invention : PRODUCTION METHOD FOR PANTS TYPE DISPOSABLE DIAPER AND PANTS TYPE DISPOSABLE DIAPER CAPABLE OF BEING PRODUCED BY SAID PRODUCTION METHOD

(51) International classification	:A61F13/15,A61F13/49,A61F13/496
(31) Priority Document No	:2014049884
(32) Priority Date	:13/03/2014
(33) Name of priority country	:Japan
(86) International Application No	:PCT/JP2015/055559
Filing Date	:26/02/2015
(87) International Publication No	:WO 2015/137129
(61) Patent of Addition to Application Number	:NA
Filing Date	:NA
(62) Divisional to Application Number	:NA
Filing Date	:NA

(71)**Name of Applicant :**
1)DAIO PAPER CORPORATION
Address of Applicant :2 60 Mishimakamiyacho Shikokuchuo shi Ehime 7990492 Japan
(72)**Name of Inventor :**
1)MORI Yosuke
2)MANABE Sadanao

(57) Abstract :
A production method for a pants type disposable diaper that uses a space saving and simple device reduces the risk of wrinkles and is characterized by: a continuous sheet material (12S) being provided along the continuation direction thereof; having elastic stretching/shrinking members (15 18) for applying elasticity to a ventral outer cover body (12F) and a dorsal outer cover body (12B) arranged in a CD direction intermediate section (12c) of the sheet material (12S); a section more on one side and a section more on the other side in the CD direction than the CD direction intermediate section (12c) each being folded back to the side having the elastic stretching/shrinking members (15 18) in the CD direction intermediate section (12c); the elastic stretching/shrinking members (15 18) being sandwiched and fixed by the folded back sheet material (12s); the folded back sections and the CD direction intermediate section (12c) being joined and a continuous elastic belt being formed; and an inner cover body (200) being assembled in a dorsal side elastic belt (12b) and a ventral side elastic belt (12f) that are obtained by cutting the elastic belt at the CD direction intermediate position.

No. of Pages : 42 No. of Claims : 11

(12) PATENT APPLICATION PUBLICATION
(19) INDIA
(22) Date of filing of Application :30/08/2016
(21) Application No.201617029582 A
(43) Publication Date : 20/01/2017

(54) Title of the invention : ANTIBODY MOLECULES TO TIM 3 AND USES THEREOF

(51) International classification :C07K16/28
(31) Priority Document No :61/934469
(32) Priority Date :31/01/2014
(33) Name of priority country :U.S.A.
(86) International Application No :PCT/US2015/013913
Filing Date :30/01/2015
(87) International Publication No :WO 2015/117002
(61) Patent of Addition to Application Number :NA
Filing Date :NA
(62) Divisional to Application Number :NA
Filing Date :NA

(71)**Name of Applicant :**
1)NOVARTIS AG
Address of Applicant :Lichtstrasse 35 4056 Basel Switzerland
2)DANA FARBER CANCER INSTITUTE INC.
3)CHILDRENS MEDICAL CENTER CORPORATION
(72)**Name of Inventor :**
1)SABATOS PEYTON Catherine Anne
2)BRANNETTI Barbara
3)HARRIS Alan S.
4)HUBER Thomas
5)PIETZONKA Thomas
6)MATARAZA Jennifer Marie
7)BLATTLER Walter A.
8)HICKLIN Daniel J.
9)VASQUEZ Maximiliano
10)DEKRUYFF Rosemarie H.
11)UMETSU Dale T.
12)FREEMAN Gordon James
13)HU Tiancen
14)TARASZKA John A.
15)XU Fangmin

(57) Abstract :
Antibody molecules that specifically bind to TIM-3 are disclosed. The anti-TIM-3 antibody molecules can be used to treat, prevent and/or diagnose immune, cancerous, or infectious conditions and/or disorders.

No. of Pages : 273 No. of Claims : 158

(12) PATENT APPLICATION PUBLICATION
(21) Application No.2109/DEL/2015 A
(19) INDIA
(22) Date of filing of Application :13/07/2015
(43) Publication Date : 20/01/2017

(54) Title of the invention : IMPROVED CATALYTIC HYDROGENATION PROCESS FOR P-AMINOPHENOL WITH CONTINUOUS AQUEOUS PHASE

(51) International classification	:C07C 209/00
(31) Priority Document No	:NA
(32) Priority Date	:NA
(33) Name of priority country	:NA
(86) International Application No	:NA
Filing Date	:NA
(87) International Publication No	: NA
(61) Patent of Addition to Application Number	:NA
Filing Date	:NA
(62) Divisional to Application Number	:NA
Filing Date	:NA

(71)**Name of Applicant :**
1)COUNCIL OF SCIENTIFIC & INDUSTRIAL RESEARCH
Address of Applicant :ANUSANDHAN BHAWAN, RAFI MARG, NEW DELHI - 110 001, INDIA Delhi India
(72)**Name of Inventor :**
1)CHANDRASHEKHAR VASANT RODE
2)VIVEK VINAYAK RANADE
3)SUNIL SHANKAR JOSHI
4)NILESH ATMARAM MALI

(57) Abstract :
The invention provides an efficient process to obtain p-aminophenol (PAP) from nitro benzene in high yields and selectivity. An improved process for the synthesis of PAP, with yield > 85% is disclosed. The process comprises the steps of: (a)Reacting hydrogen and nitro benzene in the presence of a catalyst and aqueous sulphuric acid to obtain PAP, aniline and DADPE mixture; (b) Separation and recovery of PAP from the reaction crude mixture of step (a) by single / two-step neutralization, extraction using solvent and a solubilizing agent, followed by manipulation of amine sulphate solubility in presence of a salting agent; (c) Separating DADPE from the mixture of step (a) and further processing DADPE to obtain pure PAP.

No. of Pages : 29 No. of Claims : 10

(12) PATENT APPLICATION PUBLICATION
(21) Application No.2170/DEL/2015 A
(19) INDIA
(22) Date of filing of Application :17/07/2015
(43) Publication Date : 20/01/2017

(54) Title of the invention : EFFICIENT PROTEIN FOLDING PROCESS TO IMPROVE THE FUNCTIONAL YIELD OF RECOMBINANT ZDHFR PROTEIN

(51) International classification	:C07K 1/00
(31) Priority Document No	:NA
(32) Priority Date	:NA
(33) Name of priority country	:NA
(86) International Application No	:NA
Filing Date	:NA
(87) International Publication No	: NA
(61) Patent of Addition to Application Number	:NA
Filing Date	:NA
(62) Divisional to Application Number	:NA
Filing Date	:NA

(71)**Name of Applicant :**
1)AMITY UNIVERSITY
Address of Applicant :AMITY UNIVERSITY CAMPUS SECTOR 125, NOIDA 201303, U.P,INDIA Uttar Pradesh India
(72)**Name of Inventor :**
1)CHARU THAPLIYAL
2)PRATIMA CHAUDHURI

(57) Abstract :
The present invention relates to a process for refolding an inactive recombinant zebrafish Dihydrofolate reductase (zDHFR) protein into a native conformation using oxide-shuffling buffer or refolding buffer comprising oxidized and reduced form of glutathione in Tris-HCl buffer pH 7.4 containing KCl and glycerol, along with manipulation of time and environmental factors which provides the efficient refolding of zDHFR through spontaneous refolding process. The process is also applicable to proteins which contain a free sulfhydryl group in its functional form.

No. of Pages : 15 No. of Claims : 5

(12) PATENT APPLICATION PUBLICATION
(21) Application No.2120/DEL/2015 A
(19) INDIA
(22) Date of filing of Application :14/07/2015
(43) Publication Date : 20/01/2017

(54) Title of the invention : CONVERSION OF -6-AMYL-A-PYRONE INTO 2-NONENE-4-ONE VIA RING OPENING AND DECARBOXYLATION

(51) International classification	:C07C 45/00	(71)**Name of Applicant :**
(31) Priority Document No	:NA	**1)Indian Institute of Technology Delhi,**
(32) Priority Date	:NA	Address of Applicant :Hauz Khas, New Delhi Delhi India
(33) Name of priority country	:NA	(72)**Name of Inventor :**
(86) International Application No	:NA	**1)M. Ali Haider**
Filing Date	:NA	**2)Ms. Shelaka Gupta**
(87) International Publication No	: NA	**3)Ejaz Ahamad**
(61) Patent of Addition to Application Number	:NA	**4)Md. Imteyaz Alam**
Filing Date	:NA	
(62) Divisional to Application Number	:NA	
Filing Date	:NA	

(57) Abstract :
The invention provides one pot process for the production unsaturated linear ketones by conversion of 6-amyl-α-pyrone into 2-nonene-4-one via ring-opening and decarboxylation. The process can be carried out optionally in the presence of acid catalyst. The ketones thus produced find wide application in fuel technology.

No. of Pages : 24 No. of Claims : 11

(12) PATENT APPLICATION PUBLICATION
(21) Application No.2158/DEL/2015 A
(19) INDIA
(22) Date of filing of Application :15/07/2015
(43) Publication Date : 20/01/2017

(54) Title of the invention : METHOD OF ENCAPSULATING CELLS USING ALGINATE PEPTIDE CONJUGATE AND USES THEREOF

(51) International classification	:C12N 5/00	
(31) Priority Document No	:NA	
(32) Priority Date	:NA	
(33) Name of priority country	:NA	
(86) International Application No	:NA	
Filing Date	:NA	
(87) International Publication No	: NA	
(61) Patent of Addition to Application Number	:NA	
Filing Date	:NA	
(62) Divisional to Application Number	:NA	
Filing Date	:NA	

(71)**Name of Applicant :**
1)DIRECTOR GENERAL, DEFENCE RESEARCH & DEVELOPMENT ORGANISATION
Address of Applicant :Ministry of Defence, Govt. of India, Room No 348, B-Wing, DRDO Bhawan, Rajaji Marg, New Delhi 110011, India Delhi India
(72)**Name of Inventor :**
1)GANGENAHALLI, Gurudutta
2)VERMA, Yogesh Kumar
3)TRIPATHI, Rajendra Prasad

(57) Abstract :
The present disclosure provides a method of 5 encapsulating a cell population with a conjugate of alginate and at least one peptide. The present disclosure also provides peptides, and peptide alginate conjugates that are useful for cell encapsulation.

No. of Pages : 38 No. of Claims : 11

(12) PATENT APPLICATION PUBLICATION
(21) Application No.2159/DEL/2015 A
(19) INDIA
(22) Date of filing of Application :15/07/2015
(43) Publication Date : 20/01/2017

(54) Title of the invention : A METHOD OF PREPARING A MULTI-LAYER ENCAPSULATING CELL POPULATION AND USES THEREOF

(51) International classification	:C12N 5/00
(31) Priority Document No	:NA
(32) Priority Date	:NA
(33) Name of priority country	:NA
(86) International Application No	:NA
Filing Date	:NA
(87) International Publication No	: NA
(61) Patent of Addition to Application Number	:NA
Filing Date	:NA
(62) Divisional to Application Number	:NA
Filing Date	:NA

(71)**Name of Applicant :**
1)DIRECTOR GENERAL, DEFENCE RESEARCH & DEVELOPMENT ORGANISATION
Address of Applicant :Ministry of Defence, Govt. of India, Room No 348, B-Wing, DRDO Bhawan, Rajaji Marg, New Delhi 110011, India Delhi India
(72)**Name of Inventor :**
1)GANGENAHALLI, Gurudutta
2)VERMA, Yogesh Kumar
3)TRIPATHI, Rajendra Prasad

(57) Abstract :
The present disclosure provides a method of preparing a multi-layer encapsulated cell population comprising of an inner layer of chitosan and an outer layer of having a first inner layer of chitosan, and a second outer layer of alginate. Also provide are multi-layer encapsulated cells prepared by said method, and uses thereof in shielding of cells.

No. of Pages : 51 No. of Claims : 8

(12) PATENT APPLICATION PUBLICATION
(21) Application No.2169/DEL/2015 A
(19) INDIA
(22) Date of filing of Application :17/07/2015
(43) Publication Date : 20/01/2017

(54) Title of the invention : BIOELECTRICAL IMPEDANCE METER DESIGN

(51) International classification	:G01N 27/00	(71)**Name of Applicant :**
(31) Priority Document No	:NA	**1)RAJIV KAPOOR**
(32) Priority Date	:NA	Address of Applicant :T-5/3, DTU CAMPUS, BAWANA ROAD DELHI-42 Delhi India
(33) Name of priority country	:NA	**2)ABHISHEK GROVER**
(86) International Application No	:NA	**3)RAJESH BIROK**
Filing Date	:NA	**4)PADMA BATRA**
(87) International Publication No	: NA	(72)**Name of Inventor :**
(61) Patent of Addition to Application Number	:NA	**1)RAJIV KAPOOR**
Filing Date	:NA	**2)ABHISHEK GROVER**
(62) Divisional to Application Number	:NA	**3)RAJESH BIROK**
Filing Date	:NA	**4)PADMA BATRA**

(57) Abstract :
The invention stated in this report deals with a biomedical instrument which is designed to measure impedance of a particular section of human body. The said impedance is known as bioelectrical impedance. The instrument introduces a sinusoidal current of frequency 50kHz and amplitude pf 600 uA and then measures the voltage across the section through which the current was passed. The frequency of the inserted current can be varied so as to obtain results of bioimpedance spectroscopy. For further research on response of biological tissues to various types of waveforms we have provided in this instrument a flexibility of changing the, amplitude of the signal introduced and changing the waveform to be introduced. The instrument supports injection pf triangular and square waveform in addition to, sinusoidal waveform. The instrument has been implemented and tested by us and gives accurate outputs suitable for first hand diagnosis of diseases

No. of Pages : 5 No. of Claims : 7

(12) PATENT APPLICATION PUBLICATION
(21) Application No.2173/DEL/2015 A
(19) INDIA
(22) Date of filing of Application :17/07/2015
(43) Publication Date : 20/01/2017

(54) Title of the invention : A METHOD AND SYSTEM OF ENCODING AND DECODING OF INFORMATION USING GEOMETRIC MARKER PATTERN •

(51) International classification	:H04N 1/00
(31) Priority Document No	:NA
(32) Priority Date	:NA
(33) Name of priority country	:NA
(86) International Application No	:NA
Filing Date	:NA
(87) International Publication No	: NA
(61) Patent of Addition to Application Number	:NA
Filing Date	:NA
(62) Divisional to Application Number	:NA
Filing Date	:NA

(71)**Name of Applicant :**
1)India Innovation Incorporation Pvt. Ltd.
Address of Applicant :M-259, Greater Kailash2, New Delhi--110048, India Delhi India
(72)**Name of Inventor :**
1)Prabhtej Bhatia
2)Priyanka Kanwar
3)Vicky Budhiraja

(57) Abstract :
Embodiments of the present invention relate to systems and methods for encoding and decoding of information from a Kite Code Ring. Embodiments further encompasses a method of embedding at least one information in a Kite Code Ring using steps of inputting at least one parameter; creating a primary structure of the Kite Code Ring; converting the at least one parameter; encoding and converting the boolean array; creating a resultant structure of the Kite Code Ring and printing the resultant structure. Further, embodiments may encompass a method of detection and decoding of information from the Kite Code Ring using steps of capturing an image of the Kite Code Ring by a user; processing the captured image; detecting and correcting the Kite Code Ring; decoding the at least one active data point of the Kite Code Ring; fetching the information from a database; performing a data correction; and exhibiting the information to the user.

No. of Pages : 26 No. of Claims : 17

(12) PATENT APPLICATION PUBLICATION
(21) Application No.201614022159 A
(19) INDIA
(22) Date of filing of Application :28/06/2016
(43) Publication Date : 20/01/2017

(54) Title of the invention : COLD PRESSURE FIX TONER COMPOSITIONS BASED ON SMALL MOLECULE CRYSTALLINE AND AMORPHOUS ORGANIC COMPOUND MIXTURES

(51) International classification :G03G9/08
(31) Priority Document No :14/802,949
(32) Priority Date :17/07/2015
(33) Name of priority country :U.S.A.
(86) International Application No :NA
Filing Date :NA
(87) International Publication No : NA
(61) Patent of Addition to Application Number :NA
Filing Date :NA
(62) Divisional to Application Number :NA
Filing Date :NA

(71)**Name of Applicant :**
1)Xerox Corporation
Address of Applicant :45 Glover Avenue, P.O. Box 4505, Norwalk, Connecticut 06856-4505, UNITED STATES OF AMERICA U.S.A.
(72)**Name of Inventor :**
1)Richard Philip Nelson Veregin
2)Nan-Xing Hu
3)Guerino G. Sacripante
4)Karen A. Moffat
5)Jennifer L. Belelie

(57) Abstract :
A cold pressure fix toner composition includes at least one C16 to C80 crystalline organic material having a melting point in a range from about 30 °C to about 130 °C and at least one C16 to C80 amorphous organic material having a Tg of from about -30 °C to about 70 °C. A method of cold pressure fix toner application includes providing the cold pressure fix toner composition, disposing the cold pressure fix toner composition on a substrate and applying pressure to the disposed composition on the substrate under cold pressure fixing conditions. The cold pressure fix toner compositions can be formed into latexes.

No. of Pages : 38 No. of Claims : 10

(12) PATENT APPLICATION PUBLICATION
(21) Application No.201614022921 A
(19) INDIA
(22) Date of filing of Application :04/07/2016
(43) Publication Date : 20/01/2017

(54) Title of the invention : HOME, OFFICE SECURITY, SURVEILLANCE SYSTEM USING MICRO MOBILE DRONES AND IP CAMERAS

(51) International classification :H04L9/18
(31) Priority Document No :14/797,303
(32) Priority Date :13/07/2015
(33) Name of priority country :U.S.A.
(86) International Application No :NA
Filing Date :NA
(87) International Publication No : NA
(61) Patent of Addition to Application Number :NA
Filing Date :NA
(62) Divisional to Application Number :NA
Filing Date :NA

(71)**Name of Applicant :**
1)HONEYWELL INTERNATIONAL INC.
Address of Applicant :101 Columbia Road, P. O. Box 2245, Morristown, New Jersey 07962-2245, U.S.A. U.S.A.
(72)**Name of Inventor :**
1)KV, Vijaya Krishna
2)KHOT, Bharat Balaso
3)SWAIN, Bikram
4)OH, Eric

(57) Abstract :
A system including a security system that protects a secured geographic area including at least a building, a wireless helicopter drone, a camera carried by the drone and a processor of the security system that controls a geographic location of the drone based upon threats detected within the secured area and that records video via the camera from the controlled location

No. of Pages : 11 No. of Claims : 15

(12) PATENT APPLICATION PUBLICATION
(21) Application No.2118/DEL/2015 A
(19) INDIA
(22) Date of filing of Application :14/07/2015
(43) Publication Date : 20/01/2017

(54) Title of the invention : A WATER HEATING SYSTEM WITH FREQUENCY INJECTOR FOR LOW POWER CONSUMPTION

(51) International classification	:H01F 27/00	(71)**Name of Applicant :**
(31) Priority Document No	:NA	**1)VERMA,MANISH KUMAR**
(32) Priority Date	:NA	Address of Applicant :SUDHA NIWAS,H/NO.555-KA/o-KN-1376, OSHO NAGAR,KANOUSI,POST-MANAK NAGAR, LUCKNOW-226023,UTTAR PRADESH Uttar Pradesh India
(33) Name of priority country	:NA	
(86) International Application No	:NA	**2)SENGUPTA,MANAB KUMAR**
Filing Date	:NA	**3)TOMAR,ANURADHA**
(87) International Publication No	: NA	(72)**Name of Inventor :**
(61) Patent of Addition to Application Number	:NA	**1)VERMA,MANISH KUMAR**
Filing Date	:NA	**2)SENGUPTA,MANAB KUMAR**
(62) Divisional to Application Number	:NA	**3)TOMAR,ANURADHA**
Filing Date	:NA	

(57) Abstract :
A water heater or geyser(200) comprises of a harmonic generator(l 00) generating a harmonic supply by ·means of a oscillator circuit(lOl) which is producing an output of standard 220 V with a frequency of 150 Hz. The plurality of heating plates(105) connected lu the oscillator circuit(lOl) by means of a transformer(l02) consisting of a primary winding(103) having a predetermined number of turns and a secondary winding(104) having a predetermined number of turns, the secondary winding(104) being electrically conductive, wherein current is supplied to the primary winding(103) of the heating unit(llO) by the oscillator circuit(101), creating an electro-magnetic field around the primary winding(l 03) that couples· with the secondary winding(104), thereby inducing high frequency current in the secondary winding004) and heating the secondary winding(104) and the water flowing through the heating plates(l05). The water heater (200) comprising of an inner body (201) and an outer body (202).A tank (203) is located in the inner body (201) of the water heater (200) to retain a volume of water to be heated.

No. of Pages : 12 No. of Claims : 9

(12) PATENT APPLICATION PUBLICATION
(21) Application No.2175/DEL/2015 A
(19) INDIA
(22) Date of filing of Application :17/07/2015
(43) Publication Date : 20/01/2017

(54) Title of the invention : RECOMBINANT CONSTRUCT, RECOMBINANT MICROORGANISM, RECOMBINANT PLANT CELL AND METHOD OF PROVIDING PLANT WITH RESISTANCE AGAINST DNA VIRUS AND RNA VIRUS •

(51) International classification	:C12N 15/00
(31) Priority Document No	:NA
(32) Priority Date	:NA
(33) Name of priority country	:NA
(86) International Application No	:NA
Filing Date	:NA
(87) International Publication No	: NA
(61) Patent of Addition to Application Number	:NA
Filing Date	:NA
(62) Divisional to Application Number	:NA
Filing Date	:NA

(71)**Name of Applicant :**
1)NATIONAL CHUNG HSING UNIVERSITY
Address of Applicant :No.250, Guoguang Rd., South Dist., Taichung City 402, Taiwan (R.O.C.) Taiwan
(72)**Name of Inventor :**
1)SHYI-DONG YEH
2)CHING-FU YANG
3)KUAN-CHUN CHEN
4)YA-LING HUANG

(57) Abstract :
Provided is a strategy for generating transgenic plants with concurrent resistance to DNA and RNA viruses at one construction, so as to develop an RNA-directed DNA methylation (RdDM) transgenic system using a hairpin construct of Ageratum yellow vein virus (AYVV) promoter region residing in an intron to resist DNA virus infection by RdDM. Furthermore, the hairpin construct of the AYVV promoter region coupled with an untranslatable nucleocapsid protein (NP) fragment of Melon yellow sport virus (MYSV) is created to induce post-transcriptional gene silencing (PTGS) against MYSV. A method for providing transgenic plants conferring concurrent resistance to both AYVV 10 . and MYSV for control of DNA and RNA virus at the same time, and underlying RdDM and PTGS mechanisms, respectively, is also provided.

No. of Pages : 45 No. of Claims : 16

(12) PATENT APPLICATION PUBLICATION
(21) Application No.2176/DEL/2015 A
(19) INDIA
(22) Date of filing of Application :17/07/2015
(43) Publication Date : 20/01/2017

(54) Title of the invention : AN ELECTRICALLY OPERATED WATER HEATERS EXHIBITING SMOOTH TRANSITION OF LED FROM ONE COLOR TO ANOTHER CORRESPONDING TO RISE IN WATER TEMPERATURE

(51) International classification	:H01H 37/14	(71)**Name of Applicant :**
(31) Priority Document No	:NA	**1)HAVELLS INDIA LIMITED**
(32) Priority Date	:NA	Address of Applicant :1 RAJ NARAIN MARG, CIVIL LINES, DELHI - 110054 INDIA. Delhi India
(33) Name of priority country	:NA	(72)**Name of Inventor :**
(86) International Application No	:NA	**1)NAVEEN KUMAR PANCHAL**
Filing Date	:NA	**2)VIKAS MANCHANDA**
(87) International Publication No	: NA	**3)TOM JOSEPH**
(61) Patent of Addition to Application Number	:NA	**4)JAI SINGH**
Filing Date	:NA	**5)RAGHAV MUKIM**
(62) Divisional to Application Number	:NA	
Filing Date	:NA	

(57) Abstract :
The invention relates to an electrically operated water heaters exhibiting smooth transition of LED from one color to another corresponding to rise in water temperature, comprising a steel tank, an inlet pipe, an outlet pipe, a heating element, a thermal cutout, a pressure relief valve, an anode rod, an insulation structure, a power supply PCB a display PCB and an LED circuit formed of a temperature sensor, a microcontroller, a tri-color RGB LED strip, and a LED driver, wherein the temperature sensor senses the temperature of water inside the tank of the water heater and transmit the sensed data to the microcontroller in form of voltage, wherein the microcontroller senses the temperature and based on the sensed data changes the color of the RGB LED through the LED driver that provides a constant current to the LEDs.

No. of Pages : 14 No. of Claims : 8

(12) PATENT APPLICATION PUBLICATION
(19) INDIA
(22) Date of filing of Application :16/09/2016
(21) Application No.201617031712 A
(43) Publication Date : 20/01/2017

(54) Title of the invention : PORTABLE HEMODIALYSIS MACHINE AND DISPOSABLE CARTRIDGE

(51) International classification :A61M37/00
(31) Priority Document No :61/945698
(32) Priority Date :27/02/2014
(33) Name of priority country :U.S.A.
(86) International Application No :PCT/US2015/017744
Filing Date :26/02/2015
(87) International Publication No :WO 2015/130927
(61) Patent of Addition to Application Number :NA
Filing Date :NA
(62) Divisional to Application Number :NA
Filing Date :NA

(71)**Name of Applicant :**
1)EASYDIAL INC.
Address of Applicant :181 Technology Drive #150 Irvine CA 92618 U.S.A.
(72)**Name of Inventor :**
1)GIORDANO Renato
2)CORDER Rodney

(57) Abstract :
A portable hemodialysis system is provided suitable for in home use. The hemodialysis system includes a disposable cartridge and a reused dialysis machine. The disposable cartridge includes a dialyzer and a dialysate flow path and a blood flow path which flow in opposing directions through the dialyzer. In addition the disposable cartridge possesses pump actuators (but not pump motors) for pumping dialysate and blood through their respective flow paths. The pump actuators having non deformable components including a housing having a central cavity forming an internal sidewall a rotor eccentrically positioned within the cavity having radially aligned slots at the rotor s periphery and vanes slideably positioned in the slots to slide in and out of the slots so as to seal with the cavity s internal sidewall creating vane chambers that pump blood or dialysate.

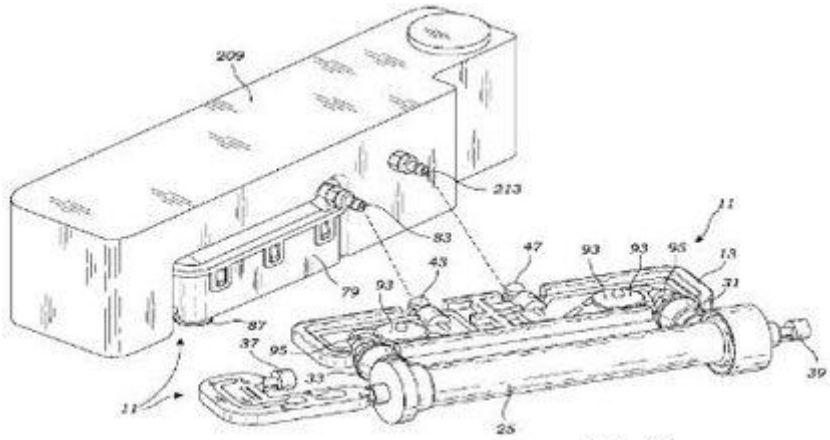

Fig. 8

No. of Pages : 35 No. of Claims : 6

(12) PATENT APPLICATION PUBLICATION
(21) Application No.4269/DEL/2015 A
(19) INDIA
(22) Date of filing of Application :24/12/2015
(43) Publication Date : 20/01/2017

(54) Title of the invention : REFLECTING PLATE, BACKLIGHT UNIT, AND DISPLAY DEVICE

(51) International classification	:G02F 1/00, G02B 6/00
(31) Priority Document No	:10-2015-0099282
(32) Priority Date	:13/07/2015
(33) Name of priority country	:Republic of Korea
(86) International Application No	:NA
Filing Date	:NA
(87) International Publication No	: NA
(61) Patent of Addition to Application Number	:NA
Filing Date	:NA
(62) Divisional to Application Number	:NA
Filing Date	:NA

(71)**Name of Applicant :**
1)SAMSUNG ELECTRONICS CO., LTD.
Address of Applicant :129, Samsung-ro, Yeongtong-gu, Suwon-si, Gyeonggi-do, Republic of Korea Republic of Korea
(72)**Name of Inventor :**
1)Chun Soon PARK
2)Young Chol LEE
3)Seung Hun CHAE
4)Sung Ho CHOI
5)Hyung Jin HA

(57) Abstract :
Disclosed herein are a reflecting plate, a backlight unit, and a display device using the backlight unit, and the display device includes one or more light sources; a reflecting plate to which light radiated from the one or more light sources is incident and having a reflecting surface reflecting the incident light; one or more selective light absorbing parts disposed on the reflecting surface and configured to selectively absorb a portion of the incident light; and a quantum dot sheet into which at least one of light emitted without being absorbed by the selective light absorbing part and light radiated from the light source is incident.

No. of Pages : 65 No. of Claims : 15

(12) PATENT APPLICATION PUBLICATION
(19) INDIA
(22) Date of filing of Application :28/06/2016
(21) Application No.201624022114 A
(43) Publication Date : 20/01/2017

(54) Title of the invention : METHOD FOR PRODUCING A CROSS-WOUND BOBBIN

(51) International classification :B65H54/38, B65H63/08
(31) Priority Document No :102015009191.3
(32) Priority Date :16/07/2015
(33) Name of priority country :Germany
(86) International Application No :NA
Filing Date :NA
(87) International Publication No : NA
(61) Patent of Addition to Application Number :NA
Filing Date :NA
(62) Divisional to Application Number :NA
Filing Date :NA

(71)**Name of Applicant :**
1)SAURER GERMANY GMBH & CO. KG
Address of Applicant :LEVERKUSER STRASSE 65, 42897 REMSCHEID, GERMANY Germany
(72)**Name of Inventor :**
1)Bassewitz von, Kai
2)Flamm, Franz-Josef
3)Schwartz, Peter

(57) Abstract :
The present invention relates to a method for producing a cross-wound bobbin (3), wherein a laying device (12) performs a first laying stroke (41, 51) of a first stroke length (h1) and a second laying stroke (44, 54) of a second, different stroke length (h2). According to the invention, the length (h1, h2) of the reversal sections (41.1, 44.1, 51.1, 54.1, 41.2, 44.2, 51.2, 54.2) of the first and second laying stroke (41, 51, 44, 54) are adjusted relative to one another so that at the same laying speed of the first and second laying stroke (41, 51, 44, 54) in a central area (45, 55) between the reversal sections (41.1, 44.1, 51.1, 54.1, 41.2, 44.2, 51.2, 54.2) the laying frequencies of the first and second laying stroke (41, 51, 44, 54) correspond.

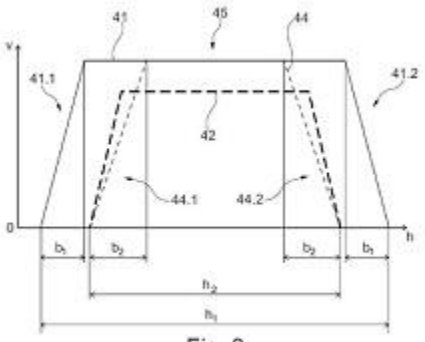

Fig. 3

No. of Pages : 17 No. of Claims : 5

(12) PATENT APPLICATION PUBLICATION
(19) INDIA
(22) Date of filing of Application :11/07/2016
(21) Application No.201624023711 A
(43) Publication Date : 20/01/2017

(54) Title of the invention : LEVER DEVICE

(51) International classification	:F02M51/06, F02M63/00
(31) Priority Document No	:2015-139681
(32) Priority Date	:13/07/2015
(33) Name of priority country	:Japan
(86) International Application No	:NA
Filing Date	:NA
(87) International Publication No	: NA
(61) Patent of Addition to Application Number	:NA
Filing Date	:NA
(62) Divisional to Application Number	:NA
Filing Date	:NA

(71)**Name of Applicant :**
1)KABUSHIKI KAISHA TOKAI RIKA DENKI SEISAKUSHO
Address of Applicant :260, Toyota 3-chome, ohguchi-cho, Niwa-gun, Aichi, 480-0195, Japan Japan
2)TOYOTA JIDOSHA KABUSHIKI KAISHA
(72)**Name of Inventor :**
1)NAKANO, Yohei
2)SHIMIZU, Etsuo

(57) Abstract :
A lever device includes a housing and a lever unit pivotally coupled to the housing. The lever unit includes a lever shaft and a pivot shaft that extends in a direction intersecting the lever shaft. The pivot shaft functions as a pivot axis of the lever unit when the lever is pivoted in a first direction. The housing includes a retainer that accommodates thepivot shaft. The pivot shaft includes first and second guides. The first guide slides on theretainer when the lever unit is pivoted in the first direction to permit movement of the lever unit. The second guide that slides on theretainer when the lever unit is operated in a second direction to permit movement of the lever unit.

Fig.1

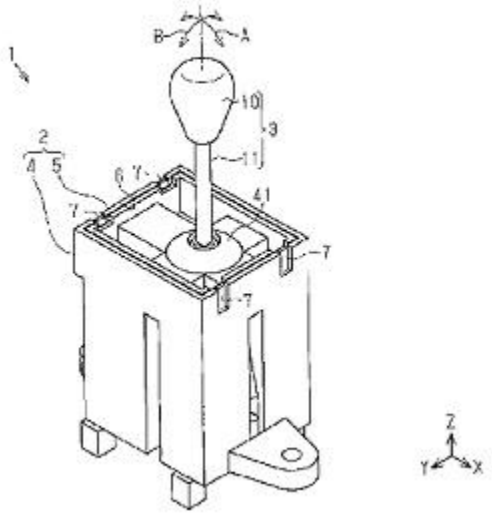

No. of Pages : 27 No. of Claims : 7

(12) PATENT APPLICATION PUBLICATION
(21) Application No.201624024101 A
(19) INDIA
(22) Date of filing of Application :14/07/2016
(43) Publication Date : 20/01/2017

(54) Title of the invention : PRESSURE BALANCING GATE VALVE

(51) International classification	:F16K43/00, F16K39/04, E21B34/02
(31) Priority Document No	:1512287.2
(32) Priority Date	:14/07/2015
(33) Name of priority country	:U.K.
(86) International Application No	:NA
Filing Date	:NA
(87) International Publication No	: NA
(61) Patent of Addition to Application Number	:NA
Filing Date	:NA
(62) Divisional to Application Number	:NA
Filing Date	:NA

(71)**Name of Applicant :**
1)Hawa Valves (India) Private Limited
Address of Applicant :R16, TTC Industrial Area, Rabale, Thane Belapur Road, Navi Mumbai, Maharashtra India 400 701 Maharashtra India
(72)**Name of Inventor :**
1)Hawa Javed Anwar

(57) Abstract :
A gate valve assembly 100 comprises a valve body 20 with an inlet 22 and an outlet 23 and first and second valve elements 31, 33 which are located between the inlet 22 and the outlet 23. The first valve element 31 is engageable with and disengageable from the second valve element 33. The second valve element 33 is in sliding contact with the valve body 20 and is slidable between a first position in which the second valve element 31 prevents flow from the inlet 22 to the outlet 23 and a second position in which the second valve element 31 permits flow from the inlet 22 to the outlet 23. An actuator 12 is operable to move the first and second valve elements 31, 33. The assembly 100 is configured to provide a first flow path from the inlet 22 to the outlet 23 when the first valve element 31 is disengaged from the second valve element 33, and to provide a second flow path from the inlet 22 to the outlet 23 when the second valve element 33 is moved from the first position to the second position. Upon operation of the actuator 12 to open the valve assembly 100, initially the first valve element 31 disengages from the second valve element 33 to permit fluid flow through the first flow path in order to equalise upstream and downstream pressure on the second valve element 33. Further operation of the actuator 12 slides the second valve element 33 from the first position to the second position to permit fluid flow through the second flow path.

No. of Pages : 14 No. of Claims : 8

(12) PATENT APPLICATION PUBLICATION
(19) INDIA
(22) Date of filing of Application :07/11/2016

(21) Application No.201627037991 A
(43) Publication Date : 20/01/2017

(54) Title of the invention : SOLAR THERMAL AND BIGCC INTEGRATED HYBRID POWER GENERATION SYSTEM

(51) International classification :F02C6/00,F03G6/02,F01K27/00
(31) Priority Document No :201410144008.5
(32) Priority Date :11/04/2014
(33) Name of priority country :China
(86) International Application No :PCT/CN2015/072397
Filing Date :06/02/2015
(87) International Publication No:WO 2015/154584
(61) Patent of Addition to Application Number :NA
Filing Date :NA
(62) Divisional to Application Number :NA
Filing Date :NA

(71)**Name of Applicant :**
1)WUHAN KAIDI ENGINEERING TECHNOLOGY RESEARCH INSTITUTE CO. LTD.
Address of Applicant :T1 Jiangxia Avenue Miaoshan Development Zone Jiangxia District Wuhan Hubei 430212 China
(72)**Name of Inventor :**
1)CHEN Yilong
2)ZHANG Yanfeng
3)TANG Hongming
4)LIU Wenyan

(57) Abstract :
A solar thermal and BIGCC integrated hybrid power generation system comprising a solar energy concentrating collector system (9) biomass gasification equipment (1) a gas fired electric generator (7) a steam turbine (13) and a steam electric generator (14). The solar energy concentrating collector system (9) is connected to a solar energy heat exchange system (11). The biomass gasification equipment (1) is connected to the gas fired electric generator (7) via a gas compressor (3) a combustion chamber (5) and a gas turbine (6). An output of the gas turbine (6) is simultaneously connected to a gas residual heat system (8). A low pressure steam output of the gas residual system (8) is connected to a medium/low pressure cylinder of the steam turbine (13). A high pressure steam output of the gas residual system (8) and high pressure steam produced by the solar energy heat exchange system (11) are both connected to a steam mixture regulating system (12). An output of the steam mixture regulating system (12) is connected to a high pressure cylinder of the steam turbine (13). By means of the steam mixture regulating system mixture of steams of different temperatures is implemented and the temperature of the mixed steam is regulated and controlled thus satisfying steam requirements of a variable parameter steam turbine.

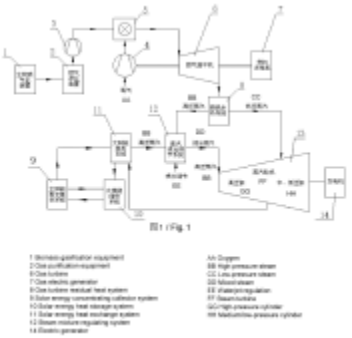

No. of Pages : 11 No. of Claims : 10

(12) PATENT APPLICATION PUBLICATION
(21) Application No.201627038333 A
(19) INDIA
(22) Date of filing of Application :09/11/2016
(43) Publication Date : 20/01/2017

(54) Title of the invention : METHOD FOR CONTROLLING WATER CIRCULATION AND PROCESSING IN WASHING MACHINE AND WASHING MACHINE

(51) International classification :D06F39/00,C02F1/52
(31) Priority Document No :201410192970.6
(32) Priority Date :08/05/2014
(33) Name of priority country :China
(86) International Application No :PCT/CN2014/081453
Filing Date :02/07/2014
(87) International Publication No :WO 2015/168982
(61) Patent of Addition to Application Number :NA
Filing Date :NA
(62) Divisional to Application Number :NA
Filing Date :NA

(71)**Name of Applicant :**
1)QINGDAO HAIER WASHING MACHINE CO. LTD.
Address of Applicant :No.1 Haier Road Hi tech Industrial Park Laoshan Qingdao Shandong 266101 China
(72)**Name of Inventor :**
1)SHU Hai
2)XU Sheng
3)DENG Jinzhu
4)LV Yanfen

(57) Abstract :
Disclosed are a method for controlling water circulation and processing in a washing machine and a washing machine. The washing machine comprises a washing machine main body (1) and a water circulation and processing system (2). The water circulation and processing system (2) comprises a flocculation container (5) for flocculating the drained water from the washing machine main body (1) the flocculation container (5) being provided with a water level detection apparatus (4). After water is used by the washing machine for washing laundry the water circulation and processing system (2) subjects the water to flocculation and then circulates same for re use and according to the amount of detergent dosed the amount of water intake for washing and the amount of water processed in each flocculation calculates the dose of flocculant needed for the water to be processed by the flocculation process this time. The dose of flocculant can be precisely calculated by measuring and calculating the amount of water intake for washing and the amount of water to be processed for each flocculation so as to ensure flocculation effects. Furthermore by calculating the height of flocculation product after layer separation by means of the flocculant dose using a water level measurement can entirely separate a clean water layer such that more water joins the circulation for use saving more water and enabling flocculated matter to be prevented from mixing with the circulating clean water improving flocculation efficiency.

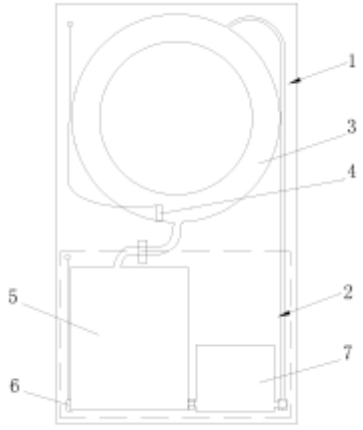

图 1 / FIG.1

No. of Pages : 16 No. of Claims : 13

(12) PATENT APPLICATION PUBLICATION
(21) Application No.201627038482 A
(19) INDIA
(22) Date of filing of Application :10/11/2016
(43) Publication Date : 20/01/2017

(54) Title of the invention : WASHING MACHINE AND CONTROL METHOD THEREFOR

(51) International classification :D06F39/08
(31) Priority Document No :201410192501.4
(32) Priority Date :08/05/2014
(33) Name of priority country :China
(86) International Application No :PCT/CN2014/081454
Filing Date :02/07/2014
(87) International Publication No :WO 2015/168983
(61) Patent of Addition to Application Number :NA
Filing Date :NA
(62) Divisional to Application Number :NA
Filing Date :NA

(71)**Name of Applicant :**
1)QINGDAO HAIER WASHING MACHINE CO. LTD.
Address of Applicant :No.1 Haier Road Hi tech Industrial Park Laoshan Qingdao Shandong 266101 China
(72)**Name of Inventor :**
1)XU Sheng
2)DENG Jinzhu

(57) Abstract :
Disclosed is a washing machine and a control method therefor. The washing machine comprises a water containing barrel (2) a flocculation container (4) and a filtering container (5) and the water containing barrel (2) the flocculation container (4) the filtering container (5) and then the water containing barrel (2) are successively brought into communication in a loop; the flocculation container (4) is provided with a stirring mechanism (7) which stirs to accelerate the dissolution of flocculant and a washing mechanism (8) for flushing and washing an inner wall of the flocculation container; a rotatable filtering mechanism (9) and a filtering and self washing mechanism (10) using water intake current to spray and clean the filtering mechanism are provided in the filtering container (5). When the washing ends water is discharged into the flocculation container and after the flocculation processing the water is discharged into the water containing barrel of the washing machine for rinsing after being filtered by the filtering container and the processing procedure is circulated until the rinsing is completed; during the last rinsing processing the flocculation generated in the circulated water flocculation processing is controlled to be discharged and the rinsing is completed. Using rinsing water to wash the flocculation container improves the automation degree simplifies the structure and saves production cost.

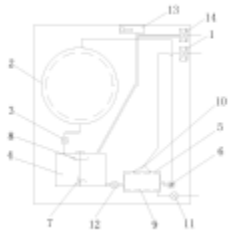

图 1 / Fig. 1

No. of Pages : 17 No. of Claims : 15

(12) PATENT APPLICATION PUBLICATION
(19) INDIA
(22) Date of filing of Application :14/11/2016
(21) Application No.201627038769 A
(43) Publication Date : 20/01/2017

(54) Title of the invention : ORTHO TERPHENYLS FOR THE PREPARATION OF GRAPHENE NANORIBBONS

(51) International classification :C07C25/18,C01B31/04,C08G61/10
(31) Priority Document No :14168466.2
(32) Priority Date :15/05/2014
(33) Name of priority country :EPO
(86) International Application No :PCT/EP2015/060421
Filing Date :12/05/2015
(87) International Publication No :WO 2015/173215
(61) Patent of Addition to Application Number :NA
Filing Date :NA
(62) Divisional to Application Number :NA
Filing Date :NA

(71)**Name of Applicant :**
1)BASF SE
Address of Applicant :67056 Ludwigshafen Germany
2)MAX PLANCK GESELLSCHAFT ZUR F–RDERUNG DER WISSENSCHAFTEN E.V.
(72)**Name of Inventor :**
1)SCHWAB Matthias Georg
2)MLLEN Klaus
3)FENG Xinliang
4)DUMSLAFF Tim
5)RUFFIEUX Pascal
6)FASEL Roman

(57) Abstract :
12342140222The present invention concerns ortho Terphenyls of general formula (I); wherein R R R and R are independently selected from the group consisting of H; CN; NO; and saturated unsaturated or aromatic C C hydrocarbon residues which can be substituted 1 to 5 fold with F CI OH NH CN and/or NO and wherein one or more CH groups can be replaced by O NH S C(=O)O OC(=O) and/or C(=O) ; and X and Y are the same or different and selected from the group consisting of F CI Br I and OTf (trifluoromethanesulfonate); and their use for the preparation of graphene nanoribbons as well as a process for the preparation of graphene nanoribbons from said ortho Terphenyls.

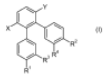

FIG.7

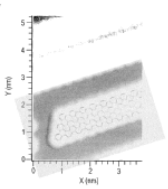

No. of Pages : 16 No. of Claims : 10

(12) PATENT APPLICATION PUBLICATION
(19) INDIA
(22) Date of filing of Application :14/11/2016
(21) Application No.201627038796 A
(43) Publication Date : 20/01/2017

(54) Title of the invention : BRUSH HOLDING DEVICE FOR A COMMUTATOR MACHINE

(51) International classification :H02K11/02,H02K5/22
(31) Priority Document No :10 2014 007 244.4
(32) Priority Date :16/05/2014
(33) Name of priority country :Germany
(86) International Application No :PCT/EP2015/060803
Filing Date :15/05/2015
(87) International Publication No :WO 2015/173418
(61) Patent of Addition to Application Number :NA
Filing Date :NA
(62) Divisional to Application Number :NA
Filing Date :NA

(71)**Name of Applicant :**
1)NIDEC MOTORS & ACTUATORS (GERMANY) GMBH
Address of Applicant :Seewiesenstrae 9 74321 Bietigheim Bissingen Germany
(72)**Name of Inventor :**
1)BRUHN Rainer
2)BIN SHAMSOL Che sakre

(57) Abstract :
A motor according to the invention comprises a rotating section; and a stationary section wherein the rotating section has a shaft a rotor core fixed to the shaft a coil wound around the rotor core and a sensor magnet fixed to the shaft and wherein the stationary section has a brush holding device a housing covering a portion of the brush holding device a magnet fixed inside the housing a bearing that is retained in the housing and supports the shaft a first circuit board having a plate shape and extending in an axial direction and a second circuit board having a plate shape and extending in the axial direction. The housing has a cylindrical portion a lid portion and a bottom portion. The brush holding device has a brush holder a plug extending radially outward from the brush holder a first plug contact element and a second plug contact element extending from the plug to the brush holder the first circuit board a choke coil and a brush. The first circuit board is connected to the first plug contact element and the second plug contact element. The first plug contact element and the second plug contact element are connected with the brush through the choke coil and are made of an electrically conductive material and supply electric power to the brush. The first circuit board has electric magnetic interference suppression components and the second circuit board (has a magnetic pole sensor that detects a magnetic pole of the sensor magnet. The second circuit board is located radially inside the first circuit board and the magnetic pole sensor of the second circuit board faces the sensor magnet in a radial direction.

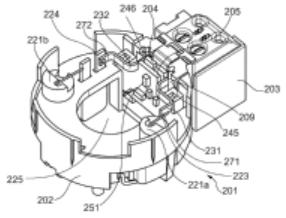

Fig. 14

No. of Pages : 25 No. of Claims : 6

(12) PATENT APPLICATION PUBLICATION
(19) INDIA
(22) Date of filing of Application :15/11/2016
(21) Application No.201627038927 A
(43) Publication Date : 20/01/2017

(54) Title of the invention : STRUCTURED IRON BASED CATALYST FOR PRODUCING OLEFIN FROM SYNTHESIS GAS AND PREPARATION METHOD AND USE

(51) International classification	:B01J23/745,B01J23/83,B01J23/889
(31) Priority Document No	:201410160961.9
(32) Priority Date	:21/04/2014
(33) Name of priority country	:China
(86) International Application No	:PCT/CN2015/072400
Filing Date	:06/02/2015
(87) International Publication No	:WO 2015/161700
(61) Patent of Addition to Application Number	:NA
Filing Date	:NA
(62) Divisional to Application Number	:NA
Filing Date	:NA

(71)**Name of Applicant :**
1)WUHAN KAIDI ENGINEERING TECHNOLOGY RESEARCH INSTITUTE CO. LTD.
Address of Applicant :T1 Jiangxia Avenue Miaoshan Development Zone Jiangxia District Wuhan Hubei 430212 China
(72)**Name of Inventor :**
1)CHEN Yilong
2)ZHANG Yanfeng
3)CHEN Jiangang
4)SONG Dechen
5)ZHANG Juan
6)SUN Taomei

(57) Abstract :
A structured iron based catalyst for producing an a olefin from a synthesis gas and a preparation method and use. The catalyst comprises an active component iron auxiliary agents and a carrier wherein the auxiliary agents comprise a first auxiliary agent which is a transition metal or a transition metal oxide and a second auxiliary agent which is a metal oxide. The content of the active component iron is 50.0% 99.8% the content of the first auxiliary agent is 0 5.0% the content of the second auxiliary agent is 0 10% and the balance is the carrier which is silicon dioxide. A precursor of the active component iron a precursor of the first auxiliary agent and the carrier silicon dioxide are made into mono dispersed particles using a heat dispersing method and then impregnated with a solution of a precursor of the second auxiliary agent to obtain the structured iron based catalyst. The above mentioned structured iron based catalyst is used for producing an a olefin from a synthesis gas. Since the mono dispersed structured iron based catalyst can generate an active centre suitable for the generation of the a olefin it thus has good selectivity.

No. of Pages : 14 No. of Claims : 10

(12) PATENT APPLICATION PUBLICATION
(21) Application No.201627040876 A
(19) INDIA
(22) Date of filing of Application :30/11/2016
(43) Publication Date : 20/01/2017

(54) Title of the invention : SYSTEMS AND METHODS FOR STEREO DEPTH ESTIMATION USING GLOBAL MINIMIZATION AND DEPTH INTERPOLATION

(51) International classification :G06T7/00
(31) Priority Document No :62/022127
(32) Priority Date :08/07/2014
(33) Name of priority country :U.S.A.
(86) International Application No :PCT/US2015/035846
Filing Date :15/06/2015
(87) International Publication No :WO 2016/007261
(61) Patent of Addition to Application Number :NA
Filing Date :NA
(62) Divisional to Application Number :NA
Filing Date :NA

(71)**Name of Applicant :**
1)QUALCOMM INCORPORATED
Address of Applicant :ATTN: International IP Administration 5775 Morehouse Drive San Diego California 92121 1714 U.S.A.
(72)**Name of Inventor :**
1)SIDDIQUI Hasib Ahmed
2)ATANASSOV Kalin Mitkov
3)VERRALL Stephen Michael

(57) Abstract :
Aspects relate to a method of generating a high resolution image containing depth information of an object. In one aspect the method includes downsampling a first reference image and a second reference image from a first resolution to a second resolution wherein the first resolution is higher than the second resolution and wherein the first reference image and the second reference image comprising a stereo image pair. The method further includes generating a depth map at the second resolution based on global minimization techniques using the downsampled stereo image pair. The method also includes upsampling the depth map from the second resolution to the first resolution and using a guided filter to align contours of the upsampled depth map to contours of the first reference image.

No. of Pages : 26 No. of Claims : 27

(12) PATENT APPLICATION PUBLICATION
(19) INDIA
(22) Date of filing of Application :30/11/2016
(21) Application No.201627040890 A
(43) Publication Date : 20/01/2017

(54) Title of the invention : HAIR EXTENSIONS

(51) International classification :A41G5/00
(31) Priority Document No :2014901607
(32) Priority Date :02/05/2014
(33) Name of priority country :Australia
(86) International Application No :PCT/AU2015/000256
Filing Date :01/05/2015
(87) International Publication No :WO 2015/164915
(61) Patent of Addition to Application Number :NA
Filing Date :NA
(62) Divisional to Application Number :NA
Filing Date :NA

(71)**Name of Applicant :**
1)CROCILLA Gaetano Giuseppe
Address of Applicant :28 Mills Street Cheltenham Victoria 3192 Australia
(72)**Name of Inventor :**
1)CROCILLA Gaetano Giuseppe

(57) Abstract :
The invention relates to a hair extension. In a preferred embodiment the hair extension comprises strands that are attached together in such a way as to provide a substantially flat configuration such that opposed sides are defined. This helps the hair extension to lay flat against a person s head. The opposed sides may have different hair colours on them allowing flexibility and additional styling options. Preferably the aligned hairs are compressed into a narrowed tip section which is used to fasten the hair extension to a person s natural hair using a deformable member such as a micro ring. A method of manufacturing the hair extension and a method of attaching the hair extension to a subject are also disclosed.

No. of Pages : 9 No. of Claims : 18

(12) PATENT APPLICATION PUBLICATION
(19) INDIA
(22) Date of filing of Application :30/11/2016

(21) Application No.201627040912 A
(43) Publication Date : 20/01/2017

(54) Title of the invention : TANK BINDING KINASE INHIBITOR COMPOUNDS

(51) International classification :C07D471/04,C07D487/04,C07D473/00
(31) Priority Document No :62/007322
(32) Priority Date :03/06/2014
(33) Name of priority country :U.S.A.
(86) International Application No :PCT/US2015/033769
Filing Date :02/06/2015
(87) International Publication No :WO 2015/187684
(61) Patent of Addition to Application Number :NA
Filing Date :NA
(62) Divisional to Application Number :NA
Filing Date :NA

(71)**Name of Applicant :**
1)GILEAD SCIENCES INC.
Address of Applicant :333 Lakeside Drive Foster City CA 94404 U.S.A.
(72)**Name of Inventor :**
1)DU Zhimin
2)GUERRERO Juan Arnaldo
3)KAPLAN Joshua Aaron
4)KNOX JR. John Edward
5)NADUTHAMBI Devan
6)PHILLIPS Barton W.
7)VENKATARAMANI Chandrasekar
8)WANG Peiyuan
9)WATKINS William J.
10)ZABLOCKI Jeff

(57) Abstract :
Compounds having the following formula (I) and methods of their use and preparation are disclosed:

No. of Pages : 348 No. of Claims : 65

(12) PATENT APPLICATION PUBLICATION
(21) Application No.201627040983 A
(19) INDIA
(22) Date of filing of Application :30/11/2016
(43) Publication Date : 20/01/2017

(54) Title of the invention : DISTRIBUTED REDUNDANCY CONTROL METHOD AND SYSTEM FOR INTELLIGENT TRANSPORTATION NETWORK

(51) International classification :G08G1/07
(31) Priority Document No :201510081956.3
(32) Priority Date :15/02/2015
(33) Name of priority country :China
(86) International Application No :PCT/CN2016/073825
Filing Date :15/02/2016
(87) International Publication No :WO 2016/127950
(61) Patent of Addition to Application Number :NA
Filing Date :NA
(62) Divisional to Application Number :NA
Filing Date :NA

(71)**Name of Applicant :**
1)KYLAND TECHNOLOGY CO.LTD
Address of Applicant :F15 Building 2 No. 30 Shixing Road Shijingshan District Beijing Beijing 100041 China
(72)**Name of Inventor :**
1)LI Ping
2)ZHANG Jianfeng

(57) Abstract :
A distributed redundancy control method and system for an intelligent transportation network. The method comprises: with respect to communication control nodes (62 67) the communication control nodes transmit a master device election packet to the other communication control nodes elect a master device (67) among the multiple communication control nodes on the basis of priorities configured for the communication control nodes and back up data of the communication control nodes into the master device (67) (S202); the master device (67) transmits a state detection packet to the other communication control nodes (62 66) and with respect to the other communication control nodes (62 66) other than the master device when a response packet from the communication control nodes for the state detection packet is such that the communication control nodes are incapable of executing an action for controlling a subordinate device of the communication control nodes executes an action for controlling the subordinate device of the communication control nodes and the master device (67) adjusts control times for signal lights of corresponding junctions on the basis of junction traffic volumes corresponding to the communication control nodes (62 67) in the redundancy network (S203). The method implements distributed redundancy control for the intelligent transportation network.

No. of Pages : 30 No. of Claims : 10

(12) PATENT APPLICATION PUBLICATION
(19) INDIA
(22) Date of filing of Application :16/12/2016
(21) Application No.201627042874 A
(43) Publication Date : 20/01/2017

(54) Title of the invention : TRANSMISSION AND RECEPTION OF DISCOVERY SIGNALS OVER A RADIO FREQUENCY SPECTRUM BAND

(51) International classification :H04W48/16,H04W16/14
(31) Priority Document No :62/032448
(32) Priority Date :01/08/2014
(33) Name of priority country :U.S.A.
(86) International Application No :PCT/US2015/043124
Filing Date :31/07/2015
(87) International Publication No :WO 2016/019251
(61) Patent of Addition to Application Number :NA
Filing Date :NA
(62) Divisional to Application Number :NA
Filing Date :NA

(71)**Name of Applicant :**
1)QUALCOMM INCORPORATED
Address of Applicant :Attn: International IP Administration 5775 Morehouse Drive San Diego California 92121 1714 U.S.A.
(72)**Name of Inventor :**
1)LUO Tao
2)WEI Yongbin
3)GAAL Peter
4)MALLADI DurgaPrasad

(57) Abstract :
Techniques are described for wireless communication. A first method includes receiving a first orthogonal frequency division multiplexing (OFDM) symbol including a plurality of reference signals (RSs) over a radio frequency spectrum band. The first method may also include receiving a second OFDM symbol including a first synchronization signal over the radio frequency spectrum band. A second method includes transmitting a first OFDM symbol including a plurality of RSs over an radio frequency spectrum band. The second method may also include transmitting a second OFDM symbol including a first synchronization signal over the radio frequency spectrum band. In each method a first portion of the first OFDM symbol includes a higher density of the RSs than a remaining portion of the first OFDM symbol and when included the second OFDM symbol may be adjacent in time to the first OFDM symbol.

No. of Pages : 76 No. of Claims : 99

(12) PATENT APPLICATION PUBLICATION
(19) INDIA
(22) Date of filing of Application :16/12/2016
(21) Application No.201627042888 A
(43) Publication Date : 20/01/2017

(54) Title of the invention : MODULAR DEVICE FOR POSITIONING TWO COMPONENTS WITH RESPECT TO ONE ANOTHER

(51) International classification :H04B1/3827
(31) Priority Document No :14 55598
(32) Priority Date :18/06/2014
(33) Name of priority country :France
(86) International Application No :PCT/EP2015/063433
Filing Date :16/06/2015
(87) International Publication No :WO 2015/193286
(61) Patent of Addition to Application Number :NA
Filing Date :NA
(62) Divisional to Application Number :NA
Filing Date :NA

(71)**Name of Applicant :**
1)FAZUP
Address of Applicant :2800 Delemont Switzerland
(72)**Name of Inventor :**
1)SAMAKH Antoine
2)SAMAKH Mathieu

(57) Abstract :
The invention relates to a device (10) for positioning a first element (12) with respect to a second element (14) which has: a horizontal panel (16) on the upper face of which the first element (12) is able to be disposed and which has a housing (20) that is able to hold the second element (14); and first abutment means (22) against which the first element (12) is able to come into abutment in a first adjusting direction and second abutment means (24) against which the first element (12) is able to come into abutment in a second adjusting direction perpendicular to the first adjusting direction said first and second abutment means (22 24) being mounted on the panel (16) and projecting from the upper face of the panel (16) characterized in that it has means for adjusting the position of the first abutment means (22) in the first adjusting direction and means for adjusting the position of the second abutment means (24) in the second adjusting direction with respect to the position of the housing (20) in the panel (16).

No. of Pages : 14 No. of Claims : 10

(12) PATENT APPLICATION PUBLICATION
(19) INDIA
(22) Date of filing of Application :16/12/2016
(21) Application No.201627042891 A
(43) Publication Date : 20/01/2017

(54) Title of the invention : UNIT AND METHOD FOR FILLING CONTAINING ELEMENTS OF SINGLE USE CAPSULES FOR EXTRACTION OR INFUSION BEVERAGES.

(51) International classification :B65B29/02,B65G47/84,B65B1/30
(31) Priority Document No :BO2014A000382
(32) Priority Date :08/07/2014
(33) Name of priority country :Italy
(86) International Application No :PCT/IB2015/054966
Filing Date :01/07/2015
(87) International Publication No :WO 2016/005861
(61) Patent of Addition to Application Number :NA
Filing Date :NA
(62) Divisional to Application Number :NA
Filing Date :NA

(71)**Name of Applicant :**
1)GIMA S.p.A.
Address of Applicant :Via Kennedy 17 40069 Zola Predosa (Bologna) Italy
(72)**Name of Inventor :**
1)CASTELLARI Pierluigi
2)REA Dario

(57) Abstract :
Described is a unit for filling containing elements (2) of single use capsules (3) with a dose (33) of product for extraction or infusion beverages comprising: a line (4) for transporting containing elements (2); a station (SR) for filling the containing elements (2) with a dose (33) of product which comprises: at least a first containing seat (S1) designed to receive a dose (33) of product; a substation (ST1) for forming the dose (33) provided with a device (6) for releasing a predetermined quantity of product defining the dose (33) inside the first containing seat (S1) the release device (6) comprising a hopper (38) and at least one rotary element (40a) having a helical profile which extends between a first end and a second end configured to rotate about a respective axis (X4) of rotation; a drive and control unit (15) configured to drive the rotary element (40a) according to a speed of rotation variable as a function of an angular position of the first end of the rotary unit (40a).

No. of Pages : 40 No. of Claims : 18

(12) PATENT APPLICATION PUBLICATION
(19) INDIA
(22) Date of filing of Application :16/12/2016
(21) Application No.201627042908 A
(43) Publication Date : 20/01/2017

(54) Title of the invention : UNIT AND METHOD FOR FILLING CONTAINING ELEMENTS OF SINGLE USE CAPSULES

(51) International classification :B65B29/02,B65B1/14,B65B1/30
(31) Priority Document No :BO2014A000383
(32) Priority Date :08/07/2014
(33) Name of priority country :Italy
(86) International Application No :PCT/IB2015/054957
Filing Date :01/07/2015
(87) International Publication No :WO 2016/005857
(61) Patent of Addition to Application Number :NA
Filing Date :NA
(62) Divisional to Application Number :NA
Filing Date :NA

(71)**Name of Applicant :**
1)GIMA S.p.A.
Address of Applicant :Via Kennedy 17 40069 Zola Predosa (Bologna) Italy
(72)**Name of Inventor :**
1)BARACCANI Davide
2)CASTELLARI Pierluigi

(57) Abstract :
A filling unit for filling containing elements (2) of single use capsules (3) with a dose (33) of product for extraction or infusion beverages comprising: a line (4) for transporting the containing elements (2); a station (SR) for filling the containing elements (2) with a dose (33) of product comprising at least a first containing seat (S1) designed to receive a dose (33) of product; a substation (ST1) for forming the dose (33) inside the first containing seat (S1) equipped with a device (6) for releasing a predetermined quantity of product defining the dose (33) inside the first containing seat (S1) the release device (6) comprising: a hopper (38) for feeding product; at least one rotary element (40a; 40b) having a plurality of blades (60A 60B 60C 60D 60E 60F); and a filling chamber (61) positioned below the rotary element (40a; 40b) the rotary element (40a; 40b) being configured to create a feeding flow of product from the feed hopper (38) towards the filling chamber (61).

No. of Pages : 34 No. of Claims : 14

(12) PATENT APPLICATION PUBLICATION
(19) INDIA
(22) Date of filing of Application :16/12/2016
(21) Application No.201627042932 A
(43) Publication Date : 20/01/2017

(54) Title of the invention : SUBSTITUTED [1 2 4]TRIAZOLE AND IMIDAZOLE COMPOUNDS AS FUNGICIDES

(51) International classification	:C07D233/60,C07D249/08,A01N43/653
(31) Priority Document No	:14171796.7
(32) Priority Date	:10/06/2014
(33) Name of priority country	:EPO
(86) International Application No	:PCT/EP2015/061772
Filing Date	:28/05/2015
(87) International Publication No	:WO 2015/189035
(61) Patent of Addition to Application Number	:NA
Filing Date	:NA
(62) Divisional to Application Number	:NA
Filing Date	:NA

(71)**Name of Applicant :**
1)BASF SE
Address of Applicant :67056 Ludwigshafen Germany
(72)**Name of Inventor :**
1)GRAMMENOS Wassilios
2)BOUDET Nadege
3)MUELLER Bernd
4)QUINTERO PALOMAR Maria Angelica
5)ESCRIBANO CUESTA Ana
6)LAUTERWASSER Erica May Wilson
7)LOHMANN Jan Klaas
8)GROTE Thomas
9)KRETSCHMER Manuel
10)CRAIG Ian Robert

(57) Abstract :
The present invention relates to compounds of the formula I wherein the variables are defined in the claims and the specification and to the preparation and uses of compounds I.

No. of Pages : 61 No. of Claims : 15

(12) PATENT APPLICATION PUBLICATION
(21) Application No.201627042958 A
(19) INDIA
(22) Date of filing of Application :16/12/2016
(43) Publication Date : 20/01/2017

(54) Title of the invention : DEVICE AUTHENTICATION APPARATUS AIR CONDITIONING SYSTEM AND DEVICE AUTHENTICATION METHOD

(51) International classification :G06F21/44,F24F11/02
(31) Priority Document No :2014169581
(32) Priority Date :22/08/2014
(33) Name of priority country :Japan
(86) International Application No :PCT/JP2015/072286
Filing Date :05/08/2015
(87) International Publication No :WO 2016/027678
(61) Patent of Addition to Application Number :NA
Filing Date :NA
(62) Divisional to Application Number :NA
Filing Date :NA

(71)**Name of Applicant :**
1)MITSUBISHI HEAVY INDUSTRIES LTD.
Address of Applicant :16 5 Konan 2 chome Minato ku Tokyo 1088215 Japan
(72)**Name of Inventor :**
1)MITOMA Keisuke
2)ITO Takahide
3)ENYA Atsushi

(57) Abstract :
A control apparatus (60) authenticates a plurality of indoor units (A1 A2) connected by a common bus (5) to constitute an air conditioning system (1). The indoor units (A1 A2) store apparatus specification information indicating the specifications thereof. In addition the control apparatus (60) stores available apparatus information indicating the specifications satisfying the requirement for being used as the indoor units (A1 A2) to successfully authenticate the indoor units (A1 A2) that have transmitted the apparatus specification information when the apparatus specification information transmitted from the indoor units (A1 A2) satisfies the available apparatus information. Through this the control apparatus (60) can exclude from the system an apparatus that has inadequate specifications.

No. of Pages : 32 No. of Claims : 3

(12) PATENT APPLICATION PUBLICATION
(19) INDIA
(22) Date of filing of Application :16/12/2016
(21) Application No.201627043051 A
(43) Publication Date : 20/01/2017

(54) Title of the invention : TERMINAL DEVICE

(51) International classification :H04R1/10
(31) Priority Document No :NA
(32) Priority Date :NA
(33) Name of priority country :NA
(86) International Application No :PCT/CN2014/080708
Filing Date :25/06/2014
(87) International Publication No :WO 2016/015179
(61) Patent of Addition to Application Number :NA
Filing Date :NA
(62) Divisional to Application Number :NA
Filing Date :NA

(71)**Name of Applicant :**
1)HUAWEI TECHNOLOGIES CO. LTD.
Address of Applicant :Huawei Administration Building Bantian Longgang District Shenzhen Guangdong 518129 China
(72)**Name of Inventor :**
1)ZHAO Menglong
2)ZHANG Bin
3)LIU Guangsheng

(57) Abstract :
Embodiments of the present invention relate to a terminal device comprising a wristband and a headphone. The wristband comprises a U shaped wristband body and respectively located at either end of the wristband body a first wristband extremity and a second wristband extremity. The headphone comprises a headphone body. The headphone body comprises a first headphone extremity and a second headphone extremity. The first wristband extremity and the first headphone extremity are fixedly connected via one rotary structure. When the headphone is being used the second headphone extremity pivots with the rotary structure as the center of a sphere. When the headphone is being used the wristband is used as an ear hook. When the headphone is not being used the headphone and the wristband jointly form one closed annular body. The terminal device provided in the present invention has a small footprint and is convenient for a user to carry.

No. of Pages : 8 No. of Claims : 6

(12) PATENT APPLICATION PUBLICATION
(19) INDIA
(22) Date of filing of Application :16/12/2016
(21) Application No.201627043056 A
(43) Publication Date : 20/01/2017

(54) Title of the invention : A METHOD AND A DEVICE FOR GENERATING A TIMING SIGNAL

(51) International classification :H04J3/06,H04B7/15
(31) Priority Document No :EP 20140173138
(32) Priority Date :19/06/2014
(33) Name of priority country :EPO
(86) International Application No :PCT/FI2015/000029
Filing Date :18/06/2015
(87) International Publication No :WO 2015/193536
(61) Patent of Addition to Application Number :NA
Filing Date :NA
(62) Divisional to Application Number :NA
Filing Date :NA

(71)**Name of Applicant :**
1)HANN Kenneth
Address of Applicant :Hsmrinkuja 4 B 02760 Espoo Finland
2)LAAMANEN Heikki
(72)**Name of Inventor :**
1)HANN Kenneth
2)LAAMANEN Heikki

(57) Abstract :
A device and a method for generating a secondary timing signal that is synchronous with a primary timing signal are presented. The method comprises deriving (401) an auxiliary timing signal from an auxiliary signal received at a first site and correcting (402 403) the timing phase of the auxiliary timing signal so as to obtain the timing phase for the secondary timing signal. The timing phase is corrected with the aid of the following a) a constant phase shift between the auxiliary timing signal and another auxiliary timing signal derived in a second site where both the primary timing signal and the auxiliary signal are available and b) a dynamic phase shift between the other auxiliary timing signal and the primary timing signal at the second site.

No. of Pages : 26 No. of Claims : 15

(12) PATENT APPLICATION PUBLICATION
(19) INDIA
(22) Date of filing of Application :16/12/2016
(21) Application No.201627043071 A
(43) Publication Date : 20/01/2017

(54) Title of the invention : CONNECTING COMPONENT MATERIAL

(51) International classification :C25D7/00,C25D5/12,H01R13/03
(31) Priority Document No :2014103080
(32) Priority Date :19/05/2014
(33) Name of priority country :Japan
(86) International Application No :PCT/JP2015/062385
Filing Date :23/04/2015
(87) International Publication No :WO 2015/178156
(61) Patent of Addition to Application Number :NA
Filing Date :NA
(62) Divisional to Application Number :NA
Filing Date :NA

(71)**Name of Applicant :**
1)NISSHIN STEEL CO. LTD.
Address of Applicant :4 1 Marunouchi 3 chome Chiyoda ku Tokyo 1008366 Japan
(72)**Name of Inventor :**
1)NISHIDA Yoshikatsu
2)HIRAOKA Masashi
3)NAGAO Masao
4)TATANO Masayoshi
5)FUJII Takahiro

(57) Abstract :
A connecting component material used as a material constituting a connecting component wherein: the connecting component material is obtained by using an Ni plated metal plate in which an Ni plating layer is formed on the surface of a metal plate and the average depth (R) of a surface roughness motif in at least one direction on the surface of the Ni plating layer is 1.0 μm or above and by forming an Sn plating layer having a thickness of 0.3 5 μm on the Ni plating layer of the Ni plated metal plate; the connecting component material makes it possible to reduce friction and minimize abrasion of the material when a connecting component such as an electrical connection terminal is fitted and to improve the reliability of a stable electrical connection; and the connecting component material can be used in e.g. electrical contact components such as lead frames harness plugs and connectors used in electrical and electronic devices and the like.

No. of Pages : 23 No. of Claims : 2

(12) PATENT APPLICATION PUBLICATION
(19) INDIA
(22) Date of filing of Application :16/12/2016
(21) Application No.201627043076 A
(43) Publication Date : 20/01/2017

(54) Title of the invention : DEVICE FOR EXTERMINATING BLOOD SUCKING INSECTS (VARIANTS)

(51) International classification :A01M1/02,A01M1/06
(31) Priority Document No :2015103953
(32) Priority Date :06/02/2015
(33) Name of priority country :Russia
(86) International Application No :PCT/RU2016/000033
Filing Date :29/01/2016
(87) International Publication No :WO 2016/126172
(61) Patent of Addition to Application Number :NA
Filing Date :NA
(62) Divisional to Application Number :NA
Filing Date :NA

(71)**Name of Applicant :**
1)OBSHESTVO S OGRANICHENNOI OTVETSTVENNOSTIU LMD KOMPLEKT PLUS
Address of Applicant :ul. Pistcova 50 Kosterevo Vladimirovskaya obl. 601110 Russia
(72)**Name of Inventor :**
1)POZNYSHEV Aleksei Sergeevich
2)KOZHURIN Sergeiy Igorevich

(57) Abstract :
Proposed are devices for exterminating blood sucking insects. One of the devices comprises a housing having a dome disposed on the top part thereof such that between the housing and the dome a channel is formed for sucking in insects; and a suction fan the blades of which are situated in the housing and the motor of which is secured in the dome which also accommodates means for attracting insects the device being characterized in that apertures are provided in the surface of the bottom part of the dome above the channel for sucking in insects. This solution makes it possible to increase the reliability of the device by reducing overheating of the motor and electronic means situated in the dome. A second device comprises a housing with channels for sucking in insects; a suction fan mounted in the housing; and a means for collecting exterminated insects. The means for collecting exterminated insects is in the form of a mesh fastened on two half rings. The half rings are hingedly connected to each other by their ends so that they can be folded together. The half rings have magnets arranged thereon for fastening the mesh to the housing. This solution makes it possible to increase the efficiency and reliability with which insects are caught.

No. of Pages : 7 No. of Claims : 2

(12) PATENT APPLICATION PUBLICATION
(19) INDIA
(22) Date of filing of Application :22/12/2016
(21) Application No.201627043804 A
(43) Publication Date : 20/01/2017

(54) Title of the invention : SYNTHETIC ANTIFERROMAGNET (SAF) COUPLED FREE LAYER FOR PERPENDICULAR MAGNETIC TUNNEL JUNCTION (P MTJ)

(51) International classification :H01L43/08,H01L43/10,H01L43/12
(31) Priority Document No :14/321516
(32) Priority Date :01/07/2014
(33) Name of priority country :U.S.A.
(86) International Application No :PCT/US2015/029264
Filing Date :05/05/2015
(87) International Publication No :WO 2016/003539
(61) Patent of Addition to Application Number :NA
Filing Date :NA
(62) Divisional to Application Number :NA
Filing Date :NA

(71)**Name of Applicant :**
1)QUALCOMM INCORPORATED
Address of Applicant :Attn: International IP Administration 5775 Morehouse Drive San Diego California 92121 1714 U.S.A.
(72)**Name of Inventor :**
1)PARK Chando
2)GOTTWALD Matthias Georg
3)LEE Kangho
4)KANG Seung Hyuk

(57) Abstract :
A magnetic tunnel junction (MTJ) device in a magnetoresistive random access memory (MRAM) and method of making the same are provided to achieve a high tunneling magnetoresistance (TMR) a high perpendicular magnetic anisotropy (PMA) good data retention and a high level of thermal stability. The MTJ device includes a first free ferromagnetic layer (202) a synthetic antiferromagnetic (SAF) coupling layern (204) and a second free ferromagnetic layer (206) where the first and second free ferromagnetic layers have opposite magnetic moments.

No. of Pages : 9 No. of Claims : 30

(12) PATENT APPLICATION PUBLICATION
(19) INDIA
(22) Date of filing of Application :22/12/2016
(21) Application No.201627043814 A
(43) Publication Date : 20/01/2017

(54) Title of the invention : POWER CONTROL PERFORMANCE FOR USER EQUIPMENT

(51) International classification :H04W52/44,H04W52/14,H04W52/48
(31) Priority Document No :62/031160
(32) Priority Date :31/07/2014
(33) Name of priority country :U.S.A.
(86) International Application No :PCT/US2015/043130
Filing Date :31/07/2015
(87) International Publication No :WO 2016/019254
(61) Patent of Addition to Application Number :NA
Filing Date :NA
(62) Divisional to Application Number :NA
Filing Date :NA

(71)**Name of Applicant :**
1)QUALCOMM INCORPORATED
Address of Applicant :Attn: International IP Administration 5775 Morehouse Drive San Diego California 92121 1714 U.S.A.
(72)**Name of Inventor :**
1)SIVANADYAN Thiagarajan
2)KADIRI Prasad
3)CHIMMAPUDI Neelakanta Venkata Seshachalam
4)KITABI Ammar
5)GANTI Kamalakar
6)SHAH Chintan
7)GHOLMIEH Aziz

(57) Abstract :
A method an apparatus and a computer program product for wireless communication are provided. The apparatus configured to establish a wireless connection to a first network tune away from the first network for a first predetermined interval tune back to the first network after the first predetermined interval enter a power control freeze state for a second predetermined interval after tuning back to the first network send a plurality of transmissions to the first network during the second predetermined interval determine if a number of the plurality of transmissions that are not received by the first network exceeds a first threshold or if a number of the plurality of transmissions that are retransmitted to the first network exceeds a second threshold and exit the power control freeze state when it is determined that the first threshold is exceeded or when it is determined that the second threshold is exceeded.

No. of Pages : 22 No. of Claims : 30

(12) PATENT APPLICATION PUBLICATION
(21) Application No.201627043911 A
(19) INDIA
(22) Date of filing of Application :22/12/2016
(43) Publication Date : 20/01/2017

(54) Title of the invention : RADIO LINK MONITORING METHOD AND UE

(51) International classification :H04W24/08
(31) Priority Document No :NA
(32) Priority Date :NA
(33) Name of priority country :NA
(86) International Application No :PCT/CN2014/080071
Filing Date :17/06/2014
(87) International Publication No :WO 2015/192315
(61) Patent of Addition to Application Number :NA
Filing Date :NA
(62) Divisional to Application Number :NA
Filing Date :NA

(71)**Name of Applicant :**
1)HUAWEI TECHNOLOGIES CO. LTD.
Address of Applicant :Huawei Administration Building Bantian Longgang District Shenzhen Guangdong 518129 China
(72)**Name of Inventor :**
1)LI Hong
2)WU Tong
3)LI Anjian
4)HAN Jing
5)CUI Jie

(57) Abstract :
Disclosed are a radio link monitoring method and a UE. The radio link monitoring method provided in an embodiment of the present invention comprises: a user equipment (UE) monitors downlink link quality of a serving cell by using an extended link monitoring period on a physical layer the extended link monitoring period being longer than an original link monitoring period; and the UE sends a synchronization indication message or an out of synchronization indication message to an upper layer of the UE when a monitoring result meets a preset reporting condition. The method in the embodiment of the present invention can reduce power consumption and reduce device cost.

No. of Pages : 24 No. of Claims : 18

(12) PATENT APPLICATION PUBLICATION
(21) Application No.201627043917 A
(19) INDIA
(22) Date of filing of Application :22/12/2016
(43) Publication Date : 20/01/2017

(54) Title of the invention : MODULATION METHOD APPARATUS AND DEVICE FOR ORTHOGONAL FREQUENCY DIVISION MULTIPLEXING OPTICAL SIGNAL

(51) International classification :H04L27/26
(31) Priority Document No :NA
(32) Priority Date :NA
(33) Name of priority country :NA
(86) International Application No :PCT/CN2014/079867
Filing Date :13/06/2014
(87) International Publication No :WO 2015/188381
(61) Patent of Addition to Application Number :NA
Filing Date :NA
(62) Divisional to Application Number :NA
Filing Date :NA

(71)**Name of Applicant :**
1)HUAWEI TECHNOLOGIES CO. LTD.
Address of Applicant :Huawei Administration Building Bantian Longgang District Shenzhen Guangdong 518129 China
(72)**Name of Inventor :**
1)DENG Ning

(57) Abstract :
A modulation method apparatus and device for an orthogonal frequency division multiplexing (OFDM) optical signal which relate to the technical field of optical communications. The method comprises: performing bit symbol mapping and serial to parallel conversion on a baseband signal to obtain at least two sub symbol sequences of the baseband signal; determining from all subcarriers of an OFDM signal a subcarrier used for loading a pilot signal; updating content corresponding to the subcarrier used for loading the pilot signal according to information of the pilot signal; and performing discrete Fourier inverse transform parallel to serial conversion digital to analog conversion and electrical amplification processing on content currently corresponding to all subcarriers of the OFDM signal and modulating processed data a bias electrical signal and non modulated light to form an OFDM optical signal loaded with the pilot signal. By means of the method all subcarriers of an OFDM optical signal can be loaded with a pilot signal so that the quantity of subcarriers loaded with a pilot signal is increased and further the quantity of pilot signals loaded on an OFDM optical signal is further increased.

No. of Pages : 50 No. of Claims : 30

(12) PATENT APPLICATION PUBLICATION
(21) Application No.201627043107 A
(19) INDIA
(22) Date of filing of Application :17/12/2016
(43) Publication Date : 20/01/2017

(54) Title of the invention : USE OF TM9SF4 AS A BIOMARKER FOR TUMOR ASSOCIATED EXOSOMES

(51) International classification :G01N33/574
(31) Priority Document No :14171464.2
(32) Priority Date :06/06/2014
(33) Name of priority country :EPO
(86) International Application No :PCT/EP2015/062594
Filing Date :05/06/2015
(87) International Publication No :WO 2015/185730
(61) Patent of Addition to Application Number :NA
Filing Date :NA
(62) Divisional to Application Number :NA
Filing Date :NA

(71)**Name of Applicant :**
1)EXOSOMICS SIENA S.P.A.
Address of Applicant :Via Fiorentina 1 53100 Siena Italy
(72)**Name of Inventor :**
1)LOZUPONE Francesco
2)CHIESI Antonio
3)GUAZZI Paolo
4)ZAROVNI Natasa
5)FERRUZZI Pietro
6)ZOCCO Davide

(57) Abstract :
The present invention relates to extracellular microvesicles biomarkers for determining the tumour transformation status or presence of a tumour in a subject and to the uses of such biomarkers and to diagnostics methods using such biomarkers. In particular the methods and uses of the invention involve isolation of TM9SF4 positive extracellular vesicles and detection of the expression of a second biomarker preferably selected from the group consisting of CD9 protein mi R 21 and RNU6.

No. of Pages : 25 No. of Claims : 20

(12) PATENT APPLICATION PUBLICATION
(19) INDIA
(22) Date of filing of Application :17/12/2016
(21) Application No.201627043134 A
(43) Publication Date : 20/01/2017

(54) Title of the invention : PROCESS FOR PRODUCING LOW COLOR AND COLOR STABLE ISOCYANATOORGANOSILANES AND PRODUCTS DERIVED THEREFROM

(51) International classification :C07F7/18,C08G18/00
(31) Priority Document No :62/024030
(32) Priority Date :14/07/2014
(33) Name of priority country :U.S.A.
(86) International Application No :PCT/US2015/040152
Filing Date :13/07/2015
(87) International Publication No :WO 2016/010900
(61) Patent of Addition to Application Number :NA
Filing Date :NA
(62) Divisional to Application Number :NA
Filing Date :NA

(71)**Name of Applicant :**
1)MOMENTIVE PERFORMANCE MATERIALS INC.
Address of Applicant :260 Hudson River Road Waterford NY 12188 U.S.A.
(72)**Name of Inventor :**
1)VU Dung Thi
2)MENDICINO Frank Dominic
3)BAHR Steven Roger
4)ZHAO Lina
5)KELBY Jeffrey R.
6)KUMAR Vikram
7)WILCOX Mark Davis

(57) Abstract :
The invention herein is directed to a process for producing isocyanatoorganosilanes having low color and improved color stability over known isocyanatosilanes involving a neutralizing step in which a carbamatoorganosilane intermediate is neutralized with acid to a pH equal to or greater than 6.0 to the isocyanatosilane produced by said process and to coatings and numerous other industrial applications which are useful in numerous industries containing the isocyanatoorganosilane produced by the process.

No. of Pages : 20 No. of Claims : 20

(12) PATENT APPLICATION PUBLICATION
(21) Application No.201627043136 A
(19) INDIA
(22) Date of filing of Application :17/12/2016
(43) Publication Date : 20/01/2017

(54) Title of the invention : WATER SEPARATOR ELEMENT COMPRISING WATER DETECTION ELECTRODES

(51) International classification :B01D36/00
(31) Priority Document No :10 2014 010 997.6
(32) Priority Date :29/07/2014
(33) Name of priority country :Germany
(86) International Application No :PCT/EP2015/067119
Filing Date :27/07/2015
(87) International Publication No :WO 2016/016172
(61) Patent of Addition to Application Number :NA
Filing Date :NA
(62) Divisional to Application Number :NA
Filing Date :NA

(71)**Name of Applicant :**
1)MANN+HUMMEL GMBH
Address of Applicant :LC IP Hindenburgstr. 45 71638 Ludwigsburg Germany
(72)**Name of Inventor :**
1)WILDERMUTH Andreas
2)NEUBAUER Helen
3)WEIDINGER Sven
4)KRAFT Gunther
5)GOEDECKE Marco

(57) Abstract :
The invention relates to a water separator element (14) for a fuel filter (10) of a motor vehicle the water separator element (14) having two water level electrodes (34 36) for detecting banked up water in a water collection chamber (32) of the fuel filter (10). The water level electrodes (34 36) can be electrically contacted by means of two contact electrodes (40 42) said contact electrodes(40 42) being connected in an electrically conductive manner to the water level electrodes (34 36). The invention further relates to a fuel filter (10) comprising a water separator element of this type.

No. of Pages : 15 No. of Claims : 17

(12) PATENT APPLICATION PUBLICATION
(21) Application No.201627043161 A
(19) INDIA
(22) Date of filing of Application :17/12/2016
(43) Publication Date : 20/01/2017

(54) Title of the invention : SILYLATED IMINE AND CARBAMATE POLYMERIC BENZOATE COMPOUNDS USES AND COMPOSITIONS THEREOF

(51) International classification :C08G77/26,A61K8/37,A61K8/58
(31) Priority Document No :14168778.0
(32) Priority Date :19/05/2014
(33) Name of priority country :EPO
(86) International Application No :PCT/EP2015/060837
Filing Date :18/05/2015
(87) International Publication No :WO 2015/177064
(61) Patent of Addition to Application Number :NA
Filing Date :NA
(62) Divisional to Application Number :NA
Filing Date :NA

(71)**Name of Applicant :**
1)INTERQUIM S.A.
Address of Applicant :Joan Buscall¡ 10 08173 Sant Cugat del Valls. E 08173 Barcelona Spain
(72)**Name of Inventor :**
1)GALLARDO S • NCHEZ Adaya
2)NONELL MARRUGAT Santiago
3)MARQUILLAS OLONDRIZ Francisco
4)SALLARES ROSELL Joan
5)MIRALLES BACETE Ricardo

(57) Abstract :
The present invention relates to organosilicon polymers containing benzoic acid esters in form of particles process for their preparation cosmetic or dermatological composition comprising them as well as their use for protecting a human or animal living body from UV radiation.

No. of Pages : 39 No. of Claims : 14

(12) PATENT APPLICATION PUBLICATION
(19) INDIA
(22) Date of filing of Application :19/12/2016
(21) Application No.201627043192 A
(43) Publication Date : 20/01/2017

(54) Title of the invention : MONOCLONAL ANTIBODIES AGAINST HER2 EPITOPE AND METHODS OF USE THEREOF

(51) International classification :C07K16/32,A61K47/48,A61K39/395
(31) Priority Document No :62/013944
(32) Priority Date :18/06/2014
(33) Name of priority country :U.S.A.
(86) International Application No :PCT/US2015/036431
Filing Date :18/06/2015
(87) International Publication No :WO 2015/195917
(61) Patent of Addition to Application Number :NA
Filing Date :NA
(62) Divisional to Application Number :NA
Filing Date :NA

(71)**Name of Applicant :**
1)MERSANA THERAPEUTICS INC.
Address of Applicant :840 Memorial Drive Cambridge MA 02139 U.S.A.
(72)**Name of Inventor :**
1)BODYAK Natalya D.
2)DEVIT Michael J.
3)KRAULAND Eric M.
4)LOWINGER Timothy B.
5)PARK Peter U.
6)PRINZ Bianka
7)YURKOVETSKIY Aleksandr V.

(57) Abstract :
Provision of fully human monoclonal antibodies that recognize HER2 and methods of using such monoclonal antibodies in a variety of therapeutic diagnostic and prophylactic indications.

No. of Pages : 149 No. of Claims : 80

(12) PATENT APPLICATION PUBLICATION
(19) INDIA
(22) Date of filing of Application :19/12/2016
(21) Application No.201627043198 A
(43) Publication Date : 20/01/2017

(54) Title of the invention : LAUNDRY LIQUID COMPOSITION

(51) International classification :C11D3/20,C11D3/30,C11D3/37
(31) Priority Document No :EP14176406.8
(32) Priority Date :09/07/2014
(33) Name of priority country :EPO
(86) International Application No:PCT/EP2015/065136
Filing Date :02/07/2015
(87) International Publication No :WO 2016/005271
(61) Patent of Addition to Application Number :NA
Filing Date :NA
(62) Divisional to Application Number :NA
Filing Date :NA

(71)**Name of Applicant :**
1)UNILEVER PLC
Address of Applicant :a company registered in England and Wales under company no. 41424 of Unilever House 100 Victoria Embankment London Greater London EC4Y 0DY U.K.
(72)**Name of Inventor :**
1)CARSWELL Robert John
2)COHRS Carsten
3)CRAVEN Richard Michael
4)JONES David Philip
5)KLUG Peter
6)LYON Helen Elspeth
7)NAUMANN Peter
8)PARRY Alyn James
9)PEERLINGS Henricus
10)SANDERSON Alastair Richard
11)WYNNE Andrew

(57) Abstract :
2243m1 4 2 433636Storage stable compositions comprising soil release polymers. Compositions are described comprising A) of from 45 to 55 % by weight of one or more polyesters according to the following formula (I) wherein R and R independently of one another are X (OC H) n (OC H 6) wherein X is C alkyl the (OCH) groups and the (OC H 6) groups are arranged blockwise and the block consisting of the (OC H) groups is bound to a COO group or are HO (C H) n is based on a molar average a number of from 12 to 120 m is based on a molar average a number of from 1 to 10 and a is based on a molar average a number of from 4 to 9 and B) of from 10 to 30 % by weight of one or more alcohols selected from the group consisting of ethylene glycol 1 2 propylene glycol 1 3 propylene glycol 1 2 butylene glycol 1 3 butylene glycol 1 4 butylene glycol and butyl glycol and C) of from 24 to 42 % by weight of water the amounts in each case being based on the total weight of the composition. The compositions may advantageously be used in laundry detergent and fabric care products. Process for making laundry liquid compositions comprising said active blend.

No. of Pages : 16 No. of Claims : 26

(12) PATENT APPLICATION PUBLICATION
(19) INDIA
(22) Date of filing of Application :23/12/2016
(21) Application No.201627044041 A
(43) Publication Date : 20/01/2017

(54) Title of the invention : MACHINE FOR STABILIZING A TRACK

(51) International classification :E01B27/17
(31) Priority Document No :A 630/2014
(32) Priority Date :13/08/2014
(33) Name of priority country :Austria
(86) International Application No :PCT/EP2015/001458
Filing Date :16/07/2015
(87) International Publication No :WO 2016/023609
(61) Patent of Addition to Application Number :NA
Filing Date :NA
(62) Divisional to Application Number :NA
Filing Date :NA

(71)**Name of Applicant :**
1)PLASSER & THEURER EXPORT VON BAHNBAUMASCHINEN GESELLSCHAFT M.B.H.
Address of Applicant :Johannesgasse 3 A 1010 Wien Austria
(72)**Name of Inventor :**
1)LINTZ Gerard

(57) Abstract :
The invention relates to a machine (1) for stabilizing a track (2) comprising a machine frame (5) which can be moved on the track by means of rail bound traveling mechanisms and on which a stabilization unit (4) which has height adjustment drives (6) and a vibration exciter (7) is arranged. The stabilization unit is designed to be movable in relation to the machine frame (5) in a machine longitudinal direction (23) by means of a linear displacement drive (24).

No. of Pages : 5 No. of Claims : 5

(12) PATENT APPLICATION PUBLICATION
(19) INDIA
(22) Date of filing of Application :23/12/2016
(21) Application No.201627044049 A
(43) Publication Date : 20/01/2017

(54) Title of the invention : CERAMIC COMPOSITIONS

(51) International classification :B28B3/20,C04B35/111,C04B35/46
(31) Priority Document No :14290162.8
(32) Priority Date :04/06/2014
(33) Name of priority country :EPO
(86) International Application No :PCT/EP2015/062420
Filing Date :03/06/2015
(87) International Publication No :WO 2015/185651
(61) Patent of Addition to Application Number :NA
Filing Date :NA
(62) Divisional to Application Number :NA
Filing Date :NA

(71)**Name of Applicant :**
1)IMERYS CERAMICS FRANCE
Address of Applicant :154 Rue de LUniversit F 75007 Paris France
(72)**Name of Inventor :**
1)ZHANG Wen
2)GASGNIER Gilles
3)MICALETTI Paul
4)ETCHEGOYEN Grgory
5)CHASTAGNIER Bndicte

(57) Abstract :
A dried or at least partially dried ceramic feedstock a method of preparing a dried or at least partially dried ceramic feedstock having a residual solvent content of up to about 5 wt. % ceramic formulations comprising one or more ceramic precursors temperature sensitive gelling agent solvent and having a viscosity suitable for low pressure injection molding methods for preparing said ceramic formulations a method of forming a ceramic article from said ceramic formulations and a ceramic article obtainable therefrom.

No. of Pages : 30 No. of Claims : 29

(12) PATENT APPLICATION PUBLICATION
(19) INDIA
(22) Date of filing of Application :23/12/2016
(21) Application No.201627044066 A
(43) Publication Date : 20/01/2017

(54) Title of the invention : MULTIFILAMENT POLYESTER FIBRES

(51) International classification :D01F1/10,D01F6/62
(31) Priority Document No :14175252.7
(32) Priority Date :01/07/2014
(33) Name of priority country :EPO
(86) International Application No :PCT/EP2015/063663
Filing Date :18/06/2015
(87) International Publication No :WO 2016/000968
(61) Patent of Addition to Application Number :NA
Filing Date :NA
(62) Divisional to Application Number :NA
Filing Date :NA

(71)**Name of Applicant :**
1)OMYA INTERNATIONAL AG
Address of Applicant :Baslerstrasse 42 CH 4665 Oftringen Switzerland
(72)**Name of Inventor :**
1)BRUNNER Martin
2)HIRSIGER Christoph
3)PULLEGA Francesco
4)RENTSCH Samuel
5)TINKL Michael

(57) Abstract :
The present invention concerns a multifilament fibre comprising at least one polymer comprising a polyester and at least one filler comprising calcium carbonate. The present invention further relates to a process of producing such a multifilament fibre as well as the use of calcium carbonate as filler in a multifilament fibre comprising at least one polymer comprising a polyester.

No. of Pages : 54 No. of Claims : 15

(12) PATENT APPLICATION PUBLICATION
(19) INDIA
(22) Date of filing of Application :24/12/2016
(21) Application No.201627044197 A
(43) Publication Date : 20/01/2017

(54) Title of the invention : A METHOD AND APPARATUS FOR PRODUCING BIOFUEL IN AN OSCILLATING FLOW PRODUCTION LINE UNDER SUPERCRITICAL FLUID CONDITIONS

(51) International classification :C10L1/02,B01J3/00,C10L9/08
(31) Priority Document No :PA 2014 70437
(32) Priority Date :11/07/2014
(33) Name of priority country :Denmark
(86) International Application No :PCT/DK2015/050209
Filing Date :09/07/2015
(87) International Publication No :WO 2016/004958
(61) Patent of Addition to Application Number :NA
Filing Date :NA
(62) Divisional to Application Number :NA
Filing Date :NA

(71)**Name of Applicant :**
1)JOHANNSEN Ib
Address of Applicant :Skelb¦kvej 28 DK 8240 Risskov Denmark
(72)**Name of Inventor :**
1)JOHANNSEN Ib

(57) Abstract :
The invention discloses a method for producing bio fuel (BF) from a high viscosity biomass using thermo chemical conversion of the biomass in a production line (10) with pumping means (PM) heating means (HM) and cooling means (CM). The method has the steps of 1) operating the pumping means the heating means and the cooling means so that the production line is under supercritical fluid conditions (SCF) to induce biomass conversion in a conversion zone (CZ) within the production line and 2) operating the pumping means so that at least part of the production line is in an oscillatory flow (OF) mode. The invention is advantageous for providing an improved method for producing biofuel from a high viscosity biomass. This is performed by an advantageous combination of two operating modes: supercritical fluid (SCF) conditions and oscillatory flow (OF).

No. of Pages : 23 No. of Claims : 19

(12) PATENT APPLICATION PUBLICATION
(19) INDIA
(22) Date of filing of Application :24/12/2016
(21) Application No.201627044199 A
(43) Publication Date : 20/01/2017

(54) Title of the invention : ADAPTIVE TRAFFIC SIGNAL PREEMPTION

(51) International classification :G08G1/087
(31) Priority Document No :14/309165
(32) Priority Date :19/06/2014
(33) Name of priority country :U.S.A.
(86) International Application No :PCT/US2015/036574
Filing Date :19/06/2015
(87) International Publication No :WO 2015/196010
(61) Patent of Addition to Application Number :NA
Filing Date :NA
(62) Divisional to Application Number :NA
Filing Date :NA

(71)**Name of Applicant :**
1)GLOBAL TRAFFIC TECHNOLOGIES LLC
Address of Applicant :7800 Third Street North St. Paul MN 55128 U.S.A.
(72)**Name of Inventor :**
1)EICHHORST Kevin Clare

(57) Abstract :
The disclosed approaches for processing traffic signal priority requests include receiving traffic signal priority requests from a vehicle. The number of stopped vehicles at the intersection and on an approach to the intersection is determined in response to receiving each priority request. An activation threshold is computed as a function of an estimated time of arrival (ETA) threshold and the number of stopped vehicles. A vehicle ETA of the vehicle at the intersection is determined in response to each priority request. In response to the vehicle ETA being less than the activation threshold the priority request is submitted for preemption service processing at the intersection. In response to the vehicle ETA being greater than the activation threshold submission of the priority request is bypassed for preemption service processing at the intersection.

No. of Pages : 13 No. of Claims : 12

(12) PATENT APPLICATION PUBLICATION
(19) INDIA
(22) Date of filing of Application :19/12/2016
(21) Application No.201627043223 A
(43) Publication Date : 20/01/2017

(54) Title of the invention : TECHNIQUES FOR PRIORITIZING TRANSMISSIONS IN MULTIPLE CONNECTIVITY WIRELESS COMMUNICATIONS

(51) International classification	:H04W88/06,H04W76/02,H04W74/00
(31) Priority Document No	:62/033550
(32) Priority Date	:05/08/2014
(33) Name of priority country	:U.S.A.
(86) International Application No	:PCT/US2015/035280
Filing Date	:11/06/2015
(87) International Publication No	:WO 2016/022211
(61) Patent of Addition to Application Number	:NA
Filing Date	:NA
(62) Divisional to Application Number	:NA
Filing Date	:NA

(71)**Name of Applicant :**
1)QUALCOMM INCORPORATED
Address of Applicant :ATTN: International IP Administration 5775 Morehouse Drive San Diego California 92121 1714 U.S.A.
(72)**Name of Inventor :**
1)DAMNJANOVIC Jelena
2)GAAL Peter
3)CHEN Wanshi
4)DAMNJANOVIC Aleksandar
5)VAJAPEYAM Madhavan Srinivasan

(57) Abstract :
Certain aspects of the present disclosure relate to allocating transmission power in multiple connectivity wireless networks. A device can establish a first connection with a first primary cell in a first cell group as well as a second connection with a second primary cell in a second cell group. The device can determine whether to prioritize a first communication over the first connection or a second communication over the second connection wherein the first communication and the second communication are scheduled for concurrent transmission. In addition the device can transmit at least one of the first communication over the first connection or the second communication over the second connection in a transmission time interval based at least in part on determining whether to prioritize the first communication or the second communication.

No. of Pages : 51 No. of Claims : 30

(12) PATENT APPLICATION PUBLICATION
(21) Application No.201627043236 A
(19) INDIA
(22) Date of filing of Application :19/12/2016
(43) Publication Date : 20/01/2017

(54) Title of the invention : INDEPENDENT AZIMUTH PATTERNS FOR SHARED APERTURE ARRAY ANTENNA

(51) International classification :H01Q21/30
(31) Priority Document No :62/008227
(32) Priority Date :05/06/2014
(33) Name of priority country :U.S.A.
(86) International Application No :PCT/CN2015/073386
Filing Date :28/02/2015
(87) International Publication No :WO 2015/184871
(61) Patent of Addition to Application Number :NA
Filing Date :NA
(62) Divisional to Application Number :NA
Filing Date :NA

(71)**Name of Applicant :**
1)COMMSCOPE TECHNOLOGIES LLC
Address of Applicant :1100 Commscope Place SE Hickory North Carolina 28602 U.S.A.
(72)**Name of Inventor :**
1)CAI Lishao
2)ZIMMERMAN, MARTIN Lee

(57) Abstract :
A multi column antenna having ports for different sub bands is provided. In one aspect power dividers (46a 46b) couple the sub band ports to the columns (42) of radiating elements (43). At least one power divider is an un equal power divider to allow a half power beam width (HPBW) of one sub band to be configured independently of the HPBW of the other sub band. The ports may be combined at the radiating elements (43) by diplexers (48). According to another aspect a multi column antenna has a plurality of first sub band ports and a plurality of second sub band ports. Each of the first sub band ports is coupled to one of the columns (62) by a first sub band feed network. Each of the second sub band ports is coupled to two of the columns (62) by a second sub band feed network including a power divider (66a). The different sub bands have different MIMO optimization of the same multi column antenna.

No. of Pages : 11 No. of Claims : 13

(12) PATENT APPLICATION PUBLICATION
(21) Application No.201627043259 A
(19) INDIA
(22) Date of filing of Application :19/12/2016
(43) Publication Date : 20/01/2017

(54) Title of the invention : IMAGE REMOTE PROJECTION METHOD SERVER AND CLIENT

(51) International classification :H04N21/234
(31) Priority Document No :201410606094.7
(32) Priority Date :31/10/2014
(33) Name of priority country :China
(86) International Application No :PCT/CN2015/092613
Filing Date :23/10/2015
(87) International Publication No :WO 2016/066056
(61) Patent of Addition to Application Number :NA
Filing Date :NA
(62) Divisional to Application Number :NA
Filing Date :NA

(71)**Name of Applicant :**
1)TENCENT TECHNOLOGY (SHENZHEN) COMPANY LIMITED
Address of Applicant :Room 403 East Block 2 SEG Park Zhenxing Road Futian District Shenzhen Guangdong 518000 China
(72)**Name of Inventor :**
1)HUANG Ying
2)JING Yanqing
3)LI Jun
4)CAO Wensheng
5)DU Kang
6)GENG Tianping
7)ZHOU Shaosheng
8)YANG Fan

(57) Abstract :
An image remote projection method server and client are disclosed in embodiments of the present invention. The image remote projection method comprises that: the server acquires a number N of rendering instructions invoked by a local application wherein N is a positive integer; the server determines rendering resources required for executing a number N of rendering instructions; the server generates a rendering sequence according to the execution sequence for the local application to execute a number N of rendering instructions and the rendering sequence comprises the rendering instruction determination information for determining a number N of rendering instructions and the server transmits the rendering sequence and the rendering resource determination information for determining the rendering resources to the client.

No. of Pages : 28 No. of Claims : 16

(12) PATENT APPLICATION PUBLICATION
(19) INDIA
(22) Date of filing of Application :20/12/2016
(21) Application No.201627043466 A
(43) Publication Date : 20/01/2017

(54) Title of the invention : MANGANESE ORE BENEFICIATION PROCESS

(51) International classification :C22B3/06,C22B47/00
(31) Priority Document No :2014/04408
(32) Priority Date :17/06/2014
(33) Name of priority country :South Africa
(86) International Application No :PCT/IB2015/054574
Filing Date :17/06/2015
(87) International Publication No :WO 2015/193828
(61) Patent of Addition to Application Number :NA
Filing Date :NA
(62) Divisional to Application Number :NA
Filing Date :NA

(71)**Name of Applicant :**
1)SAMANCOR MANGANESE (PROPRIETARY) LIMITED
Address of Applicant :6 Hollard Street 2001 Johannesburg South Africa
(72)**Name of Inventor :**
1)LE ROUX Johannes Theodorus Ferreira

(57) Abstract :
A process for the beneficiation of Manganese ore which includes the step of leaching of the ore with acid to remove Calcium Carbonate and Magnesium Carbonate. The ore is first broken down to the required particle size by conventional means. Selective leaching of Calcium oxide and Magnesium carbonate occurs leaving an ore having a higher Manganese content.

No. of Pages : 18 No. of Claims : 19

(12) PATENT APPLICATION PUBLICATION
(19) INDIA
(22) Date of filing of Application :24/12/2016
(21) Application No.201627044200 A
(43) Publication Date : 20/01/2017

(54) Title of the invention : VEHICLE CLASSIFICATION SYSTEM AND METHOD

(51) International classification :G08G1/015,G08G1/042,G08G1/052
(31) Priority Document No :14/314637
(32) Priority Date :25/06/2014
(33) Name of priority country :U.S.A.
(86) International Application No :PCT/US2014/055172
Filing Date :11/09/2014
(87) International Publication No :WO 2015/199745
(61) Patent of Addition to Application Number :NA
Filing Date :NA
(62) Divisional to Application Number :NA
Filing Date :NA

(71)**Name of Applicant :**
1)GLOBAL TRAFFIC TECHNOLOGIES LLC
Address of Applicant :7800 Third Street North St. Paul MN 55128 U.S.A.
(72)**Name of Inventor :**
1)NEUMAN Jeremy William

(57) Abstract :
Approaches for classifying vehicles include generating a signal waveform from a signal in a single inductive loop generated by a passing vehicle. The signal waveform is compared to a first plurality of model waveforms. Each model waveform is associated with a respective class of vehicle. A first model waveform of the first plurality of model waveforms that matches the signal waveform is determined and data indicating the respective class of vehicle associated with the first model waveform is output.

No. of Pages : 12 No. of Claims : 13

(12) PATENT APPLICATION PUBLICATION
(21) Application No.201627044203 A
(19) INDIA
(22) Date of filing of Application :24/12/2016
(43) Publication Date : 20/01/2017

(54) Title of the invention : SYSTEM AND METHOD FOR ORTHOGONAL FREQUENCY DIVISION MULTIPLE ACCESS

(51) International classification :H04W72/04
(31) Priority Document No :62/011475
(32) Priority Date :12/06/2014
(33) Name of priority country :U.S.A.
(86) International Application No :PCT/US2015/035696
Filing Date :12/06/2015
(87) International Publication No :WO 2015/192103
(61) Patent of Addition to Application Number :NA
Filing Date :NA
(62) Divisional to Application Number :NA
Filing Date :NA

(71)**Name of Applicant :**
1)HUAWEI TECHNOLOGIES CO. LTD.
Address of Applicant :Huawei Administration Building Bantian Longgang District Shenzhen Guangdong 518129 China
(72)**Name of Inventor :**
1)SUH Jung Hoon
2)BARBER Phillip
3)ABOUL MAGD Osama

(57) Abstract :
An embodiment OFDMA frame includes a header with signal (SIG) fields that are encoded at different sampling rates than one another. In one example a first signal field is encoded at a 64 point fast frequency transform (FFT) sampling rate and the second SIG field is encoded at a 256 point FFT sampling rate. The first SIG field may carry parameters for decoding the second SIG field and the second SIG field may carry resource allocation information for a payload of the OFDMA frame. The first SIG field may carry an identifier of an access point that transmits the OFDMA frame.

No. of Pages : 11 No. of Claims : 20

(12) PATENT APPLICATION PUBLICATION
(19) INDIA
(22) Date of filing of Application :26/12/2016
(21) Application No.201627044222 A
(43) Publication Date : 20/01/2017

(54) Title of the invention : SINGLE COLOR PALETTE MODE IN VIDEO CODING

(51) International classification :H04N19/503,H04N19/593
(31) Priority Document No :62/015336
(32) Priority Date :20/06/2014
(33) Name of priority country :U.S.A.
(86) International Application No :PCT/US2015/036742
Filing Date :19/06/2015
(87) International Publication No :WO 2015/196104
(61) Patent of Addition to Application Number :NA
Filing Date :NA
(62) Divisional to Application Number :NA
Filing Date :NA

(71)**Name of Applicant :**
1)QUALCOMM INCORPORATED
Address of Applicant :Attn: International IP Administration 5775 Morehouse Drive San Diego California 92121 1714 U.S.A.
(72)**Name of Inventor :**
1)KARCZEWICZ Marta
2)PU Wei
3)SEREGIN Vadim
4)ZHANG Li
5)SOLE ROJALS Joel
6)ZOU Feng
7)JOSHI Rajan Laxman

(57) Abstract :
Techniques are described for palette based video coding. In palette based coding a video coder may form a palette as a table of colors for representing video data of a particular area. Rather than coding actual pixel values (or their residuals) the video coder may code palette index values for one or more of the pixels that correspond to entries in the palette representing the colors of the pixels. A palette may be explicitly encoded predicted from previous palette entries or a combination thereof. In this disclosure techniques are described for coding a block of video data that has a single color value using a single color mode as a sub mode of a palette coding mode. The disclosed techniques enable a block having a single color value to be coded with a reduced number of bits compared to a normal mode of the palette coding mode.

No. of Pages : 55 No. of Claims : 30

(12) PATENT APPLICATION PUBLICATION
(21) Application No.201627044231 A
(19) INDIA
(22) Date of filing of Application :26/12/2016
(43) Publication Date : 20/01/2017

(54) Title of the invention : METHOD AND APPARATUS FOR AUTOMATICALLY GENERATING AN EVENTS DICTIONARY IN AN INTERNET OF THINGS (IOT) NETWORK

(51) International classification :H04L29/08,H04W4/00
(31) Priority Document No :62/035580
(32) Priority Date :11/08/2014
(33) Name of priority country :U.S.A.
(86) International Application No :PCT/US2015/044340
Filing Date :07/08/2015
(87) International Publication No :WO 2016/025336
(61) Patent of Addition to Application Number :NA
Filing Date :NA
(62) Divisional to Application Number :NA
Filing Date :NA

(71)**Name of Applicant :**
1)QUALCOMM INCORPORATED
Address of Applicant :ATTN: International IP Administration 5775 Morehouse Drive San Diego California 92121 1714 U.S.A.
(72)**Name of Inventor :**
1)GUPTA Binita

(57) Abstract :
Methods and systems are disclosed for automatically generating an events dictionary in an Internet of Things (IoT) network. In an aspect a device receives a notification of an event from an IoT device determines a state of the IoT device before and after the event compares the states of the IoT device determines a type of state change of the event determines whether the type of the state change of the first event is present in the events dictionary creates a generic entry based on the type of the state change of the first event not being present in the events dictionary and stores in the events dictionary a mapping of an event description of the event to the generic entry.

No. of Pages : 42 No. of Claims : 30

(12) PATENT APPLICATION PUBLICATION
(19) INDIA
(22) Date of filing of Application :26/12/2016
(21) Application No.201627044245 A
(43) Publication Date : 20/01/2017

(54) Title of the invention : SERVER MEDIATED PEER TO PEER COMMUNICATION OFFLOADING FROM NETWORK INFRASTRUCTURE

(51) International classification	:H04W28/08,H04W76/02,H04W88/06
(31) Priority Document No	:14/335292
(32) Priority Date	:18/07/2014
(33) Name of priority country	:U.S.A.
(86) International Application No Filing Date	:PCT/US2015/037854 :26/06/2015
(87) International Publication No	:WO 2016/010711
(61) Patent of Addition to Application Number Filing Date	:NA :NA
(62) Divisional to Application Number Filing Date	:NA :NA

(71)**Name of Applicant :**
1)QUALCOMM INCORPORATED
Address of Applicant :ATTN: International IP Administration 5775 Morehouse Drive San Diego CA 92121 1714 U.S.A.
(72)**Name of Inventor :**
1)SHUMAN Mohammed Ataur Rahman
2)GOEL Amit
3)SHARMA Sandeep

(57) Abstract :
The disclosure generally relates to offloading communication from a network infrastructure to direct peer to peer communication. In particular a server may receive peer to peer status information over the network infrastructure from at least two client devices that intend to communicate wherein the peer to peer status information may include at least coarse or precise location information associated with the client devices. The server may then instruct the client devices to communicate over a direct peer to peer connection that bypasses the network infrastructure in response to determining that the location information received from the client devices and other conditions permit offloading the communication from the network infrastructure. For example the server may determine whether the communication can be offloaded based at least in part on whether an estimated distance between the client devices falls within a maximum range associated with one or more peer to peer interfaces supported on one or more of the client devices.

No. of Pages : 43 No. of Claims : 30

(12) PATENT APPLICATION PUBLICATION
(21) Application No.201627044264 A
(19) INDIA
(22) Date of filing of Application :26/12/2016
(43) Publication Date : 20/01/2017

(54) Title of the invention : HIGH PRESSURE ROTARY SEAL PLUG ASSEMBLY WITH EXPANDABLE CONTINUOUS RING

(51) International classification :F16L17/02,F16L27/08
(31) Priority Document No :1455195
(32) Priority Date :06/06/2014
(33) Name of priority country :France
(86) International Application No :PCT/FR2015/051438
Filing Date :01/06/2015
(87) International Publication No :WO 2015/185839
(61) Patent of Addition to Application Number :NA
Filing Date :NA
(62) Divisional to Application Number :NA
Filing Date :NA

(71)**Name of Applicant :**
1)RABHI Vianney
Address of Applicant :14 quai de Serbie 69006 Lyon France
(72)**Name of Inventor :**
1)RABHI Vianney

(57) Abstract :
The invention relates to a high pressure rotary seal plug assembly with an expandable continuous ring (1) including a male hydraulic connector (2) rotating in a female hydraulic connector (4) said connectors (2 4) including an inner duct leading into a communication chamber (10) while a non expandable sealing ring (42) is mounted freely around the male hydraulic connector (2) and is housed with little play in the female hydraulic connector (4) while a non expandable ring spring (20) biases said sealing ring (42) towards a shoulder providing annular support for a ring (14) secured to the male hydraulic connector (2) and to compress axially an expandable continuous ring (13) inserted axially between the non expandable sealing ring (42) and the shoulder providing annular support for the ring (14) and comprising an inner cylindrical surface of the expandable ring (15) placed in communication with the communication chamber (10).

No. of Pages : 22 No. of Claims : 13

(12) PATENT APPLICATION PUBLICATION
(19) INDIA
(22) Date of filing of Application :26/12/2016

(21) Application No.201627044296 A
(43) Publication Date : 20/01/2017

(54) Title of the invention : RANDOM ACCESS METHOD AND APPARATUS

(51) International classification :H04W74/08
(31) Priority Document No :NA
(32) Priority Date :NA
(33) Name of priority country :NA
(86) International Application No :PCT/CN2014/081325
Filing Date :01/07/2014
(87) International Publication No :WO 2016/000198
(61) Patent of Addition to Application Number :NA
Filing Date :NA
(62) Divisional to Application Number :NA
Filing Date :NA

(71)**Name of Applicant :**
1)HUAWEI TECHNOLOGIES CO. LTD.
Address of Applicant :Huawei Administration Building Bantian Longgang Shenzhen Guangdong 518129 China
(72)**Name of Inventor :**
1)XIONG Xin

(57) Abstract :
AAAADisclosed is a random access method. In a scenario of a super large coverage cell the method comprises: receiving a random access preamble (RA preamble) sent by a user equipment (UE); setting a time advance quantity T and an R bit identifier of the super large coverage cell the R bit identifier being used for indicating a time granularity of the time advance quantity T or used for indicating a value range of the time advance quantity T; and sending a random access preamble response (RA response) message to the UE the RA response message comprising the time advance quantity T and the R bit identifier and the super large coverage cell is a cell with a coverage distance of greater than 107 Km. In this manner when signals sent by UEs located in different positions of a cell reach a base station the uplink time and the downlink time are aligned thereby ensuring the quality of communication between the UE and the base station.

No. of Pages : 31 No. of Claims : 28

(12) PATENT APPLICATION PUBLICATION
(19) INDIA
(22) Date of filing of Application :20/12/2016

(21) Application No.201627043507 A
(43) Publication Date : 20/01/2017

(54) Title of the invention : UNIVERSAL HANDLE COVER

(51) International classification	:A61B19/02,A61B19/08,F21W131/20
(31) Priority Document No	:62/001089
(32) Priority Date	:21/05/2014
(33) Name of priority country	:U.S.A.
(86) International Application No	:PCT/IL2015/050482
Filing Date	:10/05/2015
(87) International Publication No	:WO 2015/177782
(61) Patent of Addition to Application Number	:NA
Filing Date	:NA
(62) Divisional to Application Number	:NA
Filing Date	:NA

(71)**Name of Applicant :**
1)D.M. BENATAV LTD.
Address of Applicant :Gellis 34 Petah Tikva 4927934 Israel
(72)**Name of Inventor :**
1)BENATAV Dror

(57) Abstract :
An apparatus to cover a target handle (220) constituted of: a flexible bag (20) open at one end (25); an annular skirt (30) and a plurality of uniform length skirt fingers (60) extending towards a longitudinal axis (120) of said annular skirt (30) the extension of each skirt fingers (60) attached to the adjacent skirt finger (60) by a skirt connection member (140) to form a skirt band (150); and a securing ring (40) arranged to mate securely with said annular skirt (30) and a plurality of uni form securing ring fingers (100) extending towards the longitudinal axis (120) the extension of each securing ring finger (100) attached to the adjacent securing ring finger (100) by a connection member to form a securing ring band (200). Preferably at least one of the skirt band (150) and the securing ring band (200) is broken when the apparatus is set to cover the target handle (220).

No. of Pages : 11 No. of Claims : 12

(12) PATENT APPLICATION PUBLICATION
(21) Application No.201627043512 A
(19) INDIA
(22) Date of filing of Application :20/12/2016
(43) Publication Date : 20/01/2017

(54) Title of the invention : HIGH PRECISION ZINC BASED ALLOY ELECTRODE WIRE AND PREPARATION METHOD THEREFOR

(51) International classification :B23H7/24,C22C18/02
(31) Priority Document No :201410398470.8
(32) Priority Date :13/08/2014
(33) Name of priority country :China
(86) International Application No :PCT/CN2015/000279
Filing Date :21/04/2015
(87) International Publication No :WO 2016/023326
(61) Patent of Addition to Application Number :NA
Filing Date :NA
(62) Divisional to Application Number :NA
Filing Date :NA

(71)**Name of Applicant :**
1)NINGBO POWERWAY MATERIALISE CO. LTD.
Address of Applicant :Qianhouchen Village Yunlong Town Yinzhou District Ningbo Zhejiang 315137 China
(72)**Name of Inventor :**
1)LIANG Zhining
2)GUO Fanglin
3)WAN Linhui
4)WU Tong

(57) Abstract :
A high precision zinc based alloy electrode wire. Components in a shell layer comprise in mass percent 70.5% to 95% of Zn 2.5% to 27% of Cu 0.02% to 4.0% of X 0.002% to 0.4% of Y and inevitable impurities brought in by raw materials. X is any two metals selected from Ni Ag Cr Si and Zr and the content ranges of the two metals are both 0.01% to 2.0%. Y is any two elements selected from Ti Al Co B and P and the content ranges of the two elements are both 0.001% to 0.2%. The e phase content in the shell layer structure is over 80wt% the balance is a phase or an phase and e phases are evenly distributed on the surface of core materials. Also disclosed is a preparation method for the electrode wire. A metal workpiece subjected to cutting processing by the electrode wire has high surface smoothness and good surface quality and thus cutting precision is high; meanwhile the electrode wire preparation technology is simple operability is high the number of preparation steps is small and large scale and automatic production can be achieved easily.

No. of Pages : 28 No. of Claims : 5

(12) PATENT APPLICATION PUBLICATION
(19) INDIA
(22) Date of filing of Application :20/12/2016
(21) Application No.201627043567 A
(43) Publication Date : 20/01/2017

(54) Title of the invention : DIHYDROPYRIMIDO LOOP DERIVATIVE AS HBV INHIBITOR

(51) International classification :C07D487/04,C07D498/04,C07D471/04
(31) Priority Document No :201410240665.X
(32) Priority Date :30/05/2014
(33) Name of priority country :China
(86) International Application No :PCT/CN2015/079870
Filing Date :27/05/2015
(87) International Publication No :WO 2015/180631
(61) Patent of Addition to Application Number :NA
Filing Date :NA
(62) Divisional to Application Number :NA
Filing Date :NA

(71)**Name of Applicant :**
1)MEDSHINE DISCOVERY INC.
Address of Applicant :Room 218 No.9 Gaoxin Road Gaoxin Development District Nanjing Jiangsu 272004 China
(72)**Name of Inventor :**
1)HE Haiying
2)ZHOU Kai
3)QIN Hua
4)LI Xiaolin
5)ZHOU Yuedong
6)WANG Xiaofei
7)CHI Xuemei
8)LI Jian
9)CHEN Shuhui

(57) Abstract :
Disclosed is a dihydropyrimido loop derivative as a HBV inhibitor and in particular relates to a compound shown as formula (I) or a pharmaceutically acceptable salt thereof.

No. of Pages : 272 No. of Claims : 13

(12) PATENT APPLICATION PUBLICATION
(19) INDIA
(22) Date of filing of Application :21/12/2016

(21) Application No.201627043593 A
(43) Publication Date : 20/01/2017

(54) Title of the invention : DIRECT STREAMING FOR WIRELESS DISPLAY

(51) International classification :H04N21/4363,H04L29/06
(31) Priority Document No :62/030410
(32) Priority Date :29/07/2014
(33) Name of priority country :U.S.A.
(86) International Application No :PCT/US2015/042499
Filing Date :28/07/2015
(87) International Publication No :WO 2016/018926
(61) Patent of Addition to Application Number :NA
Filing Date :NA
(62) Divisional to Application Number :NA
Filing Date :NA

(71)**Name of Applicant :**
1)QUALCOMM INCORPORATED
Address of Applicant :ATTN: International IP Administration 5775 Morehouse Drive San Diego California 92121 1714 U.S.A.
(72)**Name of Inventor :**
1)KARUNAKARAN Sanal Kumar
2)AGRAWAL Sanjay Kumar
3)GORREPATI Sateesh Naidu
4)GUPTA Devraj Gajraj

(57) Abstract :
A source device comprises a memory to store video data and one or more processors wherein the one or more processors are configured to obtain encoded video data for a frame of video data; output via a display interface for the source device and for display at a display device a predefined frame for the frame of video data; and send to a sink device via a wireless communication channel the encoded video data for display at a display device associated with the sink device.

No. of Pages : 25 No. of Claims : 27

(12) PATENT APPLICATION PUBLICATION
(21) Application No.201627043597 A
(19) INDIA
(22) Date of filing of Application :21/12/2016
(43) Publication Date : 20/01/2017

(54) Title of the invention : MONITORING PERIODS FOR DEVICE TO DEVICE SYNCHRONIZATION SIGNALS

(51) International classification :H04W56/00,H04J3/06,H04L7/00
(31) Priority Document No :62/027124
(32) Priority Date :21/07/2014
(33) Name of priority country :U.S.A.
(86) International Application No :PCT/US2015/038305
Filing Date :29/06/2015
(87) International Publication No :WO 2016/014219
(61) Patent of Addition to Application Number :NA
Filing Date :NA
(62) Divisional to Application Number :NA
Filing Date :NA

(71)**Name of Applicant :**
1)QUALCOMM INCORPORATED
Address of Applicant :ATTN: International IP Administration 5775 Morehouse Drive San Diego California 92121 1714 U.S.A.
(72)**Name of Inventor :**
1)ABEDINI Navid
2)TAVILDAR Saurabha Rangrao
3)GULATI Kapil
4)BAGHEL Sudhir Kumar

(57) Abstract :
Methods systems and devices are described for determining a monitoring schedule for device to device (D2D) synchronization signals. A synchronization cycle may be determined that includes a plurality of monitoring periods. The monitoring periods may be a time between at least two start times of sequential D2D synchronization signals to detect at least one of the D2D synchronization signals. Sub monitoring periods may be determined based on the duration of the monitoring periods. The sub monitoring periods may have a cumulative duration the same as the duration of the monitoring period and be scheduled to occur during different monitoring periods of the synchronization cycle.

No. of Pages : 30 No. of Claims : 30

(12) PATENT APPLICATION PUBLICATION
(19) INDIA
(22) Date of filing of Application :21/12/2016
(21) Application No.201627043623 A
(43) Publication Date : 20/01/2017

(54) Title of the invention : MULTI LAYER VIDEO ENCODING METHOD AND MULTI LAYER VIDEO DECODING METHOD USING DEPTH BLOCKS

(51) International classification	:H04N19/119,H04N19/30,H04N19/176
(31) Priority Document No	:62/013702
(32) Priority Date	:18/06/2014
(33) Name of priority country	:U.S.A.
(86) International Application No	:PCT/KR2015/006179
Filing Date	:18/06/2015
(87) International Publication No	:WO 2015/194877
(61) Patent of Addition to Application Number	:NA
Filing Date	:NA
(62) Divisional to Application Number	:NA
Filing Date	:NA

(71)**Name of Applicant :**
1)SAMSUNG ELECTRONICS CO. LTD.
Address of Applicant :129 Samsung ro Yeongtong gu Suwon si Gyeonggi do 16677 Republic of Korea
(72)**Name of Inventor :**
1)PARK Min woo
2)LEE Jin young

(57) Abstract :
This multi layer video decoding method may comprise the steps of: obtaining partitioning mode information on a current block; obtaining depth based block partitioning information if the partitioning mode information indicates one of preset partitioning modes; dividing the current block into multiple regions if the depth based block partitioning information indicates the division of the current block into the multiple regions on the basis of a depth block corresponding to the current block; and performing motion compensation and/or inter layer compensation on the current block on the basis of the divided multiple regions.

No. of Pages : 93 No. of Claims : 15

(12) PATENT APPLICATION PUBLICATION
(21) Application No.201627043631 A
(19) INDIA
(22) Date of filing of Application :21/12/2016
(43) Publication Date : 20/01/2017

(54) Title of the invention : FATTY ACID BILE ACID CONJUGATES FOR TREATMENT OF LIPODYSTROPHY

(51) International classification :A61K31/575,A61K47/48
(31) Priority Document No :62/006178
(32) Priority Date :01/06/2014
(33) Name of priority country :U.S.A.
(86) International Application No :PCT/IL2015/050561
Filing Date :31/05/2015
(87) International Publication No :WO 2015/186126
(61) Patent of Addition to Application Number :NA
Filing Date :NA
(62) Divisional to Application Number :NA
Filing Date :NA

(71)**Name of Applicant :**
1)GALMED RESEARCH AND DEVELOPMENT LTD.
Address of Applicant :16 Tiomkin St. (4th floor) Tel Aviv 6578317 Israel
(72)**Name of Inventor :**
1)HALPERN Maya
2)BAHARAFF Allen

(57) Abstract :
The present disclosure relates generally methods of treating and/or reducing risk of lipodystrophy using compositions comprising at least one fatty acid/bile acid conjugate (FABAC). According to some embodiments the present disclosure provides methods of treating HIV associated lipodystrophy using said FABACs.

No. of Pages : 31 No. of Claims : 8

(12) PATENT APPLICATION PUBLICATION
(19) INDIA
(22) Date of filing of Application :21/12/2016
(21) Application No.201627043714 A
(43) Publication Date : 20/01/2017

(54) Title of the invention : HEMOLYSIS DETECTION METHOD AND SYSTEM

(51) International classification :G01N33/49,G01N27/06,G01R27/00
(31) Priority Document No :NA
(32) Priority Date :NA
(33) Name of priority country :NA
(86) International Application No :PCT/US2014/039261
Filing Date :23/05/2014
(87) International Publication No :WO 2015/178924
(61) Patent of Addition to Application Number :NA
Filing Date :NA
(62) Divisional to Application Number :NA
Filing Date :NA

(71)**Name of Applicant :**
1)NOVA BIOMEDICAL CORPORATION
Address of Applicant :200 Prospect Street Waltham Massachusetts 02454 U.S.A.
(72)**Name of Inventor :**
1)CAFFERTY Michael

(57) Abstract :
A hemolysis detection method and system includes measuring a conductance of a blood sample in a sample test module at a plurality of multiple frequency AC inputs provided by a sine wave generator module calculating an immittance value for each of the plurality of multiple frequency AC inputs received from a multichannel A/D converter module using a computer processing module and subjecting each immittance value calculated to a function that maps immittance values to either lysed blood levels or hematocrit levels residing in the processing module and applying further processing residing in a memory module to produce respective percent lysed value or hematocrit value of the blood sample.

No. of Pages : 16 No. of Claims : 20

(12) PATENT APPLICATION PUBLICATION
(19) INDIA
(22) Date of filing of Application :22/12/2016
(21) Application No.201627043796 A
(43) Publication Date : 20/01/2017

(54) Title of the invention : SYSTEM AND METHOD FOR DISPLAYING TABLE SEARCH RESULTS

(51) International classification :G06F7/00
(31) Priority Document No :62/003560
(32) Priority Date :28/05/2014
(33) Name of priority country :U.S.A.
(86) International Application No :PCT/US2015/033064
Filing Date :28/05/2015
(87) International Publication No :WO 2015/184194
(61) Patent of Addition to Application Number :NA
Filing Date :NA
(62) Divisional to Application Number :NA
Filing Date :NA

(71)**Name of Applicant :**
1)MUSULURI Aravind
Address of Applicant :11374 Gates Ter Johns Creek Georgia 30097 U.S.A.
(72)**Name of Inventor :**
1)MUSULURI Aravind

(57) Abstract :
Methods and Systems to display the results of a search operation are provided. More particularly the invention relates to a method to display search results comprising a relevant portion of the data in a tabular form. The said result comprises a search extract preserving table characteristics. The extract may further comprise of one or more table properties.

No. of Pages : 13 No. of Claims : 18

(12) PATENT APPLICATION PUBLICATION
(21) Application No.201627044397 A
(19) INDIA
(22) Date of filing of Application :27/12/2016
(43) Publication Date : 20/01/2017

(54) Title of the invention : TRANSMISSION DEVICE TRANSMISSION METHOD RECEIVING DEVICE AND RECEIVING METHOD

(51) International classification	:H04N21/2383,H04H20/59,H04H20/95
(31) Priority Document No	:2014140695
(32) Priority Date	:08/07/2014
(33) Name of priority country	:Japan
(86) International Application No	:PCT/JP2015/068449
Filing Date	:26/06/2015
(87) International Publication No	:WO 2016/006472
(61) Patent of Addition to Application Number	:NA
Filing Date	:NA
(62) Divisional to Application Number	:NA
Filing Date	:NA

(71)**Name of Applicant :**
1)SONY CORPORATION
Address of Applicant :1 7 1 Konan Minato ku Tokyo 1080075 Japan
(72)**Name of Inventor :**
1)MICHAEL Lachlan Bruce
2)OKAMOTO Takuya

(57) Abstract :
The present invention relates to a transmission device a transmission method a receiving device in the receiving method which enable higher speed low power consumption processing of emergency warning information within the DVB T2 standard. This transmission device is provided with an emergency warning information acquisition unit which acquires emergency warning information a content acquisition unit which acquires content a transmission frame generation unit which as a T2 frame conforming to the DVB T2 standard and comprising a P1 signal that includes P1 signaling a P2 symbol that includes L1 pre signaling and data symbols generates a T2 frame which in addition to P1 signaling or L1 pre signaling includes emergency warning notification information indicating that emergency warning information is being transmitted and a transmission unit which transmits the T2 frame as a digital broadcast signal. The present invention can be applied to a transmission device that can transmit digital broadcast signals conforming to the DVB T2 standard.

No. of Pages : 49 No. of Claims : 13

(12) PATENT APPLICATION PUBLICATION
(21) Application No.201627044458 A
(19) INDIA
(22) Date of filing of Application :27/12/2016
(43) Publication Date : 20/01/2017

(54) Title of the invention : IMAGE FORMING APPARATUS AND POSITION GUIDANCE METHOD AND IMAGE FORMING SYSTEM THEREFOR

(51) International classification :H04N1/32,H04N1/04
(31) Priority Document No :1020140081880
(32) Priority Date :01/07/2014
(33) Name of priority country :Republic of Korea
(86) International Application No :PCT/KR2015/006445
Filing Date :24/06/2015
(87) International Publication No :WO 2016/003108
(61) Patent of Addition to Application Number :NA
Filing Date :NA
(62) Divisional to Application Number :NA
Filing Date :NA

(71)**Name of Applicant :**
1)S PRINTING SOLUTION CO. LTD.
Address of Applicant :129 Samsung ro Yeongtong gu Suwon si Gyeonggi do 16677 Republic of Korea
(72)**Name of Inventor :**
1)KIM Jin Sil
2)JUN Jin Ha
3)KIM Dae Hyun
4)KIM Yun Mo

(57) Abstract :
An image forming apparatus according to one embodiment comprises: a communication unit which communicates with a portable electronic device; and a control unit receiving information related to the position of the portable electronic device from the portable electronic device and registering the position of the portable electronic device as a position of the image forming apparatus when a position registration instruction is received. A position guidance method for an image forming apparatus according to another embodiment comprises: calculating a distance between at least one beacon and a first portable electronic device; calculating a position of the first portable electronic device on the basis of the distance between the at least one beacon and the first portable electronic device; and storing the position of the first portable electronic device so as to register the position of the image forming apparatus.

No. of Pages : 98 No. of Claims : 20

(12) PATENT APPLICATION PUBLICATION
(21) Application No.201627044469 A
(19) INDIA
(22) Date of filing of Application :27/12/2016
(43) Publication Date : 20/01/2017

(54) Title of the invention : PARABOLIC ANTENNA WITH SELF STRUCTURED REFLECTOR

(51) International classification :H01Q15/16
(31) Priority Document No :BR202014013528 1
(32) Priority Date :04/06/2014
(33) Name of priority country :Brazil
(86) International Application No :PCT/BR2015/000082
Filing Date :29/05/2015
(87) International Publication No :WO 2015/184518
(61) Patent of Addition to Application Number :NA
Filing Date :NA
(62) Divisional to Application Number :NA
Filing Date :NA

(71)**Name of Applicant :**
1)ABREU Jo£o do Esprito Santo
Address of Applicant :Av. Anita Garibaldi n° 5.147 Barreirinha CEP: 82220 000 Curitiba PR Brazil
2)ABREU Jo£o Alexandre de
(72)**Name of Inventor :**
1)ABREU Jo£o do Esprito Santo
2)ABREU Jo£o Alexandre de

(57) Abstract :
The present utility model relates to a parabolic antenna (100) having a base (200) a mounting pole (300) a head unit (400) a rear structure (500) a support pole (600) a low noise converter (700) and a reflector (800) the reflector (800) being made in a single piece from laminated expanded screen that has a perfectly parabolic self structured shape without any bearing frame is fastened to the rear structure (500) of the parabolic antenna (100) by means of a fastening unit (801) and has a reinforcement edge (802) facing away from the concavity of the reflector (800) and rolled on one or two levels in the peripheric region of the reflector (800) wherein the reflector can have one or more perforated or smooth sections (803) with arbitrary vertical and/or horizontal orientations extending over the fastening unit (801).

No. of Pages : 5 No. of Claims : 2

(12) PATENT APPLICATION PUBLICATION
(21) Application No.201627044477 A
(19) INDIA
(22) Date of filing of Application :27/12/2016
(43) Publication Date : 20/01/2017

(54) Title of the invention : HOME APPLIANCE CONTROLLER HOME APPLIANCE CONTROL SYSTEM USING CONTROLLER METHOD FOR CONTROLLING HOME APPLIANCE AND COMPUTER READABLE RECORDING MEDIUM IN WHICH METHOD FOR CONTROLLING HOME APPLIANCE IS RECORDED

(51) International classification :G05B11/01
(31) Priority Document No :1020140090948
(32) Priority Date :18/07/2014
(33) Name of priority country :Republic of Korea
(86) International Application No :PCT/KR2015/003268
Filing Date :01/04/2015
(87) International Publication No :WO 2016/010231
(61) Patent of Addition to Application Number :NA
Filing Date :NA
(62) Divisional to Application Number :NA
Filing Date :NA

(71)**Name of Applicant :**
1)SAMSUNG ELECTRONICS CO. LTD.
Address of Applicant :129 Samsung ro Yeongtong gu Suwon si Gyeonggi do 443 742 Republic of Korea
(72)**Name of Inventor :**
1)YANG Hee Kyung
2)HAN Baik Hee
3)KANG Hee Jun
4)KIM Jung Yeob

(57) Abstract :
The present invention relates to a home appliance a controller a home appliance control system using the controller a method for controlling the home appliance and a computer readable recording medium in which the method for controlling the home appliance is recorded wherein the home appliance may comprise: at least one controller mounting unit on which a controller is selectively mounted ; and a processing unit connected to be communicable with the controller so as to receive a control signal generated according to an operation of the controller when the controller is mounted on the controller mounting unit.

No. of Pages : 65 No. of Claims : 46

(12) PATENT APPLICATION PUBLICATION
(19) INDIA
(22) Date of filing of Application :27/12/2016
(21) Application No.201627044485 A
(43) Publication Date : 20/01/2017

(54) Title of the invention : MOBILE TERMINAL ANTENNA CONTROLLING METHOD AND MOBILE TERMINAL

(51) International classification :H04M1/725
(31) Priority Document No :201410307645.X
(32) Priority Date :30/06/2014
(33) Name of priority country :China
(86) International Application No :PCT/CN2015/073496
Filing Date :02/03/2015
(87) International Publication No :WO 2016/000460
(61) Patent of Addition to Application Number :NA
Filing Date :NA
(62) Divisional to Application Number :NA
Filing Date :NA

(71)**Name of Applicant :**
1)HUAWEI TECHNOLOGIES CO. LTD.
Address of Applicant :Huawei Administration Building Bantian Longgang District Shenzhen Guangdong 518129 China
(72)**Name of Inventor :**
1)YU Rongdao
2)HUANG Maosheng
3)LIANG Hua
4)HUO Dawei

(57) Abstract :
A mobile terminal antenna controlling method and a mobile terminal are provided in the embodiments of the present invention. Through the mobile terminal antenna controlling method and the mobile terminal the mobile terminal can determine the number of antennas to be turned on according to specific application scenes such as information of services to be executed and perceptible environment. Therefore the number of the antennas of the mobile terminal to be turned off or turned on is reasonably controlled unnecessary energy consumption and affecting the performance of the mobile terminal are avoided.

No. of Pages : 33 No. of Claims : 28

(12) PATENT APPLICATION PUBLICATION
(19) INDIA
(22) Date of filing of Application :27/12/2016
(21) Application No.201627044494 A
(43) Publication Date : 20/01/2017

(54) Title of the invention : MULTIMEDIA PLAYING APPLICATION CONTROL METHOD AND TERMINAL

(51) International classification :G06F3/041
(31) Priority Document No :NA
(32) Priority Date :NA
(33) Name of priority country :NA
(86) International Application No :PCT/CN2014/081675
Filing Date :04/07/2014
(87) International Publication No :WO 2016/000263
(61) Patent of Addition to Application Number :NA
Filing Date :NA
(62) Divisional to Application Number :NA
Filing Date :NA

(71)**Name of Applicant :**
1)HUAWEI TECHNOLOGIES CO. LTD.
Address of Applicant :Huawei Administration Building Bantian Longgang District Shenzhen Guangdong 518129 China
(72)**Name of Inventor :**
1)KE Yuandan

(57) Abstract :
Provided are a multimedia playing application control method and terminal. The method comprises: receiving by a terminal physical instruction information wherein the physical instruction information is used for controlling a multimedia playing application running in the terminal; converting by the terminal the physical instruction information into corresponding control instruction information according to a pre set corresponding relationship; and sending by the terminal the control instruction information to the multimedia playing application running in the terminal wherein the control instruction information is used for instructing the multimedia playing application to execute an operation corresponding to the control instruction information. In the solution converting the physical instruction information into the control instruction information is uniformly executed by the terminal and the corresponding relationship defined by the same terminal between the control instruction information and the physical instruction information is identical so that when the same control is executed for different multimedia playing applications the same physical instruction can be executed. Therefore defects of the current solution for controlling a multimedia playing application that the flexibility is relatively poor and the user experience is relatively poor can be overcome.

No. of Pages : 32 No. of Claims : 16

(12) PATENT APPLICATION PUBLICATION
(21) Application No.201627036405 A
(19) INDIA
(22) Date of filing of Application :24/10/2016
(43) Publication Date : 20/01/2017

(54) Title of the invention : PHENANTHROLINE PHOSPHONIC ACID DERIVATIVE AND PREPARATION METHOD THEREFOR AND APPLICATION THEREOF

(51) International classification :C07F9/09,C07F9/117
(31) Priority Document No :201410142608.8
(32) Priority Date :10/04/2014
(33) Name of priority country :China
(86) International Application No :PCT/CN2015/076273
Filing Date :10/04/2015
(87) International Publication No :WO 2015/154716
(61) Patent of Addition to Application Number :NA
Filing Date :NA
(62) Divisional to Application Number :NA
Filing Date :NA

(71)**Name of Applicant :**
1)BERYL THERAPEUTICSINC
Address of Applicant :750 Jinbi Street Jingyue National High tech Industrial Development Zone Changchun Jilin 130117 China
(72)**Name of Inventor :**
1)ZHU Yue
2)LIAO Yuzhen
3)ZHANG Li
4)BAI Xu

(57) Abstract :
The present invention relates to a novel phenanthroline phosphonic acid compound and a pharmaceutical salt thereof as well as an application of the compound and the pharmaceutical salt thereof as collagen prolyl hydroxylase inhibitors in the preparation of drugs for preventing or treating collagen prolyl 4 hydroxylase related diseases.

No. of Pages : 45 No. of Claims : 24

(12) PATENT APPLICATION PUBLICATION
(21) Application No.201627036407 A
(19) INDIA
(22) Date of filing of Application :24/10/2016
(43) Publication Date : 20/01/2017

(54) Title of the invention : HEAT TRANSFER FLUIDS SYSTEMS EFFICIENCIES AND METHODS

(51) International classification :C09K5/04
(31) Priority Document No :62/009102
(32) Priority Date :06/06/2014
(33) Name of priority country :U.S.A.
(86) International Application No :PCT/US2015/034564
Filing Date :05/06/2015
(87) International Publication No :WO 2015/188150
(61) Patent of Addition to Application Number :NA
Filing Date :NA
(62) Divisional to Application Number :NA
Filing Date :NA

(71)**Name of Applicant :**
1)BLUON ENERGY LLC
Address of Applicant :4601 Lang Ave AI McClellan California 95652 U.S.A.
(72)**Name of Inventor :**
1)CHAMPIE Max

(57) Abstract :
Heat transfer compositions methods efficiencies and systems are disclosed. The compositions have four or more heat transfer components/constituents that have been selected such that the compositions provide an operating performance and energy efficiency that are comparable to or better than the performance of R22 and currently available R22 replacements. The four or more constituents have sequenced boiling temperatures that work together to extend the phase change thereby elongating the heat absorption phase and increasing efficiency. In some embodiments the heat transfer constituents include 15 25% by weight R32 1 5% by weight R125 50 70% by weight R134a and 10 20% by weight R227ea. The compositions may also include 0.5 3.5%) by weight R236.

No. of Pages : 20 No. of Claims : 9

(12) PATENT APPLICATION PUBLICATION
(21) Application No.2652/MUM/2015 A
(19) INDIA
(22) Date of filing of Application :14/07/2015
(43) Publication Date : 20/01/2017

(54) Title of the invention : ASHWAMEGH

(51) International classification :A61K
(31) Priority Document No :NA
(32) Priority Date :NA
(33) Name of priority country :NA
(86) International Application No :NA
Filing Date :NA
(87) International Publication No : NA
(61) Patent of Addition to Application Number :NA
Filing Date :NA
(62) Divisional to Application Number :NA
Filing Date :NA

(71)**Name of Applicant :**
1)AMRUTA PHARMACEUTICAL PVT. LTD.
Address of Applicant :A/3, SHIVGANGA APT. CHS. LTD. MISGUITTA NAGAR, DAHISAR (E), M-400068 Maharashtra India
(72)**Name of Inventor :**
1)ANIL I. GAIKWAD

(57) Abstract :
Disclosed are a pharmaceutical composite capsule formulation comprising 1) an independent irbesartan unit comprising irbesartan or a pharmaceutically acceptable salt thereof; an 2) an independebt HMG CoA reductase inhabitor unit comprising an HMG CoA reductase inhibitor or a pharmaceutically acceptable salt thereof an an alkaline additive wherein said independent units are separated from each other within a capsule and a method for preparing the same. Designed to prevent an interaction between irbesartan and the HMG CoA reductase inhabitor the pharmaceutical composite capsule formulation is impreoved in stability and dissolution rate and thus shows great bioavailability. In addition the formulation is expected to guarantee high drug compliance owing to its small size and therefore can be applied to the treatment of hypertension and hypercholesterolemia is expected to guarantee high drug compliance owing to its small size and therefore can be applied to the treatment of hypertension and hypercholesterolemia.

No. of Pages : 5 No. of Claims : 10

(12) PATENT APPLICATION PUBLICATION
(19) INDIA
(22) Date of filing of Application :14/07/2015
(21) Application No.2653/MUM/2015 A
(43) Publication Date : 20/01/2017

(54) Title of the invention : LINTO

(51) International classification :A61K
(31) Priority Document No :NA
(32) Priority Date :NA
(33) Name of priority country :NA
(86) International Application No :NA
Filing Date :NA
(87) International Publication No : NA
(61) Patent of Addition to Application Number :NA
Filing Date :NA
(62) Divisional to Application Number :NA
Filing Date :NA

(71)**Name of Applicant :**
1)AMRUTA PHARMACEUTICAL PVT. LTD.
Address of Applicant :A/3, SHIVGANGA APTS CHS LTD., MISQUITTA NAGAR, DAHISAR (EAST), MUMBAI 400068 Maharashtra India
(72)**Name of Inventor :**
1)ANIL I. GAIKWAD

(57) Abstract :
Disclosed are a pharmaceutical composite capsule formulation comprising 1) an independent irbesartan unit comprising irbesartan or a pharmaceutically acceptable salt thereof; an 2) an independebt HMG CoA reductase inhabitor unit comprising an HMG CoA reductase inhibitor or a pharmaceutically acceptable salt thereof an an alkaline additive wherein said independent units are separated from each other within a capsule and a method for preparing the same. Designed to prevent an interaction between irbesartan and the HMG CoA reductase inhabitor the pharmaceutical composite capsule formulation is impreoved in stability and dissolution rate and thus shows great bioavailability. In addition the formulation is expected to guarantee high drug compliance owing to its small size and therefore can be applied to the treatment of hypertension and hypercholesterolemia is expected to guarantee high drug compliance owing to its small size and therefore can be applied to the treatment of hypertension and hypercholesterolemia.

No. of Pages : 5 No. of Claims : 10

(12) PATENT APPLICATION PUBLICATION
(19) INDIA
(22) Date of filing of Application :03/11/2016
(21) Application No.201627037646 A
(43) Publication Date : 20/01/2017

(54) Title of the invention : SYNTHETIC PROMOTER CONSTRUCT FOR TRANSGENE EXPRESSION

(51) International classification :C12N15/82,A01H5/00
(31) Priority Document No :2014/03606
(32) Priority Date :19/05/2014
(33) Name of priority country :South Africa
(86) International Application No :PCT/IB2015/052503
Filing Date :07/04/2015
(87) International Publication No :WO 2015/177659
(61) Patent of Addition to Application Number :NA
Filing Date :NA
(62) Divisional to Application Number :NA
Filing Date :NA

(71)**Name of Applicant :**
1)AZARGEN BIOTECHNOLOGIES (PTY) LTD
Address of Applicant :LaunchLab Hammandshand Road 7600 Stellenbosch South Africa
(72)**Name of Inventor :**
1)ZWIEGELAAR Jacobus Petrus
2)VENTER Mauritz

(57) Abstract :
The invention is directed to synthetic promoter constructs for enhanced transgene expression in plants and to expression cassettes comprising the synthetic promoter constructs. The expression cassettes may include various elements for improved expression stability of the expressed protein or efficient purification of the expressed protein including signal sequences protease cleavage sites for release of the target protein trafficking peptides for trafficking of the expressed protein to various plant compartments and/or various tags. The invention further relates to methods of expression of transgenic proteins in plants with the use of the synthetic promoter constructs and expression cassettes.

No. of Pages : 40 No. of Claims : 24

(12) PATENT APPLICATION PUBLICATION
(19) INDIA
(22) Date of filing of Application :04/11/2016
(21) Application No.201627037817 A
(43) Publication Date : 20/01/2017

(54) Title of the invention : ADHESIVE OPTICAL FILM TO CONVERT AN EYEGLASS LENS TO A PROGRESSIVE LENS

(51) International classification :G02C7/08,G02B3/10
(31) Priority Document No :61/991514
(32) Priority Date :11/05/2014
(33) Name of priority country :U.S.A.
(86) International Application No :PCT/IL2015/050475
Filing Date :07/05/2015
(87) International Publication No :WO 2015/173797
(61) Patent of Addition to Application Number :NA
Filing Date :NA
(62) Divisional to Application Number :NA
Filing Date :NA

(71)**Name of Applicant :**
1)ERLICHMAN Amir
Address of Applicant :18 Habrosh 46665 Hertzelia Israel
2)ADDON OPTICS LTD.
(72)**Name of Inventor :**
1)ARIELI Yoel
2)ENGLER Haim

(57) Abstract :
The present invention describes an apparatus for converting a single-focal lens to become a multifocal or progressive lens. The conversion process comprises adhering a prescribed corrective optical film to a single-focal lens, whereby the corrective optical film converts the single-focal lens to become a multifocal or progressive lens.

No. of Pages : 8 No. of Claims : 21

(12) PATENT APPLICATION PUBLICATION
(21) Application No.201627037879 A
(19) INDIA
(22) Date of filing of Application :07/11/2016
(43) Publication Date : 20/01/2017

(54) Title of the invention : SUBSTRATE PRE TREATMENT FOR CONSISTENT GRAPHENE GROWTH BY CHEMICAL DEPOSITION

(51) International classification :C01B31/04
(31) Priority Document No :14166997.8
(32) Priority Date :05/05/2014
(33) Name of priority country :EPO
(86) International Application No :PCT/EP2015/058962
Filing Date :24/04/2015
(87) International Publication No :WO 2015/169624
(61) Patent of Addition to Application Number :NA
Filing Date :NA
(62) Divisional to Application Number :NA
Filing Date :NA

(71)**Name of Applicant :**
1)BASF SE
Address of Applicant :67056 Ludwigshafen Germany
2)MAX PLANCK GESELLSCHAFT ZUR F–RDERUNG DER WISSENSCHAFTEN E.V.
(72)**Name of Inventor :**
1)STRUDWICK Andrew James
2)SCHWAB Matthias Georg
3)MLLEN Klaus
4)SACHDEV Hermann
5)WEBER Nils Eike
6)BINDER Axel

(57) Abstract :
The present invention relates to a process for preparing graphene comprising (i) providing in a chemical deposition chamber a substrate which has a surface S1 (ii) subjecting the substrate to a thermal pre treatment while feeding at least one gaseous or supercritical oxidant into the chemical deposition chamber so as to bring the surface S1 into contact with the at least one gaseous or supercritical oxidant and obtain a pre treated surface S2 (iii) preparing graphene on the pre treated surface S2 by chemical deposition.

No. of Pages : 18 No. of Claims : 19

(12) PATENT APPLICATION PUBLICATION
(19) INDIA
(22) Date of filing of Application :14/07/2015

(21) Application No.2661/MUM/2015 A
(43) Publication Date : 20/01/2017

(54) Title of the invention : METHOD AND SYSTEM FOR ENABLING DYNAMIC CAPACITY PLANNING

(51) International classification	:G06Q	
(31) Priority Document No	:NA	
(32) Priority Date	:NA	
(33) Name of priority country	:NA	
(86) International Application No	:NA	
Filing Date	:NA	
(87) International Publication No	: NA	
(61) Patent of Addition to Application Number	:NA	
Filing Date	:NA	
(62) Divisional to Application Number	:NA	
Filing Date	:NA	

(71)**Name of Applicant :**
1)Tata Consultancy Services Limited
Address of Applicant :India Nirmal Building, 9th Floor, Nariman Point, Mumbai 400021, Maharashtra, India Maharashtra India

(72)**Name of Inventor :**
1)SIRMOKADAM, Sumukh Sudhakar
2)KSHIRSAGAR, Mahesh
3)RAUT, Sumit
4)SOMASUNDARAM, Muralidharan
5)JUNEJA, Sumit Inderjeet

(57) Abstract :
Method and system for enabling dynamic capacity planning is disclosed. Initially, historic data and current capacity planning requirement is analyzed using regression analysis techniques, decision tree modelling, seasonal impact analysis technique and, to forecast demand and generate a resource planning schedule. Capacity planning is enabled even when continuous stream of data is being received by the server, since the cache in the computing module stores certain skeletal resource allocation schedule which serve as reference data to forecast immediate and future resource planning requirements.A steady state approach is also implemented to prevent the resource planning schedule from going into surplus or deficit mode. The skeletal resource allocation schedule is populated and assessed based on the dynamic operational inputs and the current demand volume respectively. Finally, the optimal resource planning schedule is rendered and segregated based on a plurality of contextual clusters.

No. of Pages : 21 No. of Claims : 11

(12) PATENT APPLICATION PUBLICATION
(19) INDIA
(22) Date of filing of Application :27/04/2016
(21) Application No.201624014551 A
(43) Publication Date : 20/01/2017

(54) Title of the invention : SURGICAL TOOL

(51) International classification :A61B19/00
(31) Priority Document No :14/799,576
(32) Priority Date :15/07/2015
(33) Name of priority country :U.S.A.
(86) International Application No :NA
Filing Date :NA
(87) International Publication No : NA
(61) Patent of Addition to Application Number :NA
Filing Date :NA
(62) Divisional to Application Number :NA
Filing Date :NA

(71)**Name of Applicant :**
1)AtriCure, Inc.
Address of Applicant :6217 Centre Park Drive, West Chester Township OH-45069, USA. U.S.A.
(72)**Name of Inventor :**
1)MARTIN, Keith Edward
2)BANCHIERI, Michael J.
3)SIMPKINS, Haskell
4)KRUPP, Benjamin
5)PARROT, David

(57) Abstract :
A medical instrument comprising: (a) a first joint comprising a first member and a second member, the first member configured to be repositionable with respect to the second member in a first degree of freedom; (b) a second joint operatively coupled to the first joint, the second joint comprising a third member and a fourth member, the third member configured to be repositionable with respect to the fourth member in a second degree of freedom; (c) a pair of repositionable jaws operatively coupled to the first joint and the second joint; (d) an occlusion clip detachably mounted to the pair of repositionable jaws; and, (e) a controller operatively coupled to the first joint, the second joint, and the pair of repositionable jaws, the controller including a first control configured to direct repositioning of at least one of the first member and the second member, and a second control configured to direct repositioning of at least one of the third member and the fourth member, and a third control configured to direct repositioning of the pair of repositionable jaws. 77

No. of Pages : 114 No. of Claims : 100

(12) PATENT APPLICATION PUBLICATION
(19) INDIA
(22) Date of filing of Application :10/05/2016
(21) Application No.201624016219 A
(43) Publication Date : 20/01/2017

(54) Title of the invention : SURGICAL TOOL

(51) International classification :A61B19/00
(31) Priority Document No :14/799,535
(32) Priority Date :14/07/2015
(33) Name of priority country :U.S.A.
(86) International Application No :NA
Filing Date :NA
(87) International Publication No : NA
(61) Patent of Addition to Application Number :NA
Filing Date :NA
(62) Divisional to Application Number :NA
Filing Date :NA

(71)**Name of Applicant :**
1)AtriCure, Inc.
Address of Applicant :7555 Innovation Way, Mason, OH 45040, USA. U.S.A.
(72)**Name of Inventor :**
1)MARTIN, Keith Edward
2)FAGO, Frank M.
3)WILSON, David

(57) Abstract :
A medical instrument comprising: (a) a first joint comprising a first member and a second member, the first member configured to be repositionable with respect to the second member in a first degree of freedom; (b) a second joint operatively coupled to the first joint, the second joint comprising a third member and a fourth member, the third member configured to be repositionable with respect to the fourth member in a second degree of freedom; (c) a pair of repositionable jaws operatively coupled to the first joint and the second joint; (d) an open-ended occlusion clip detachably mounted to the pair of repositionable jaws; and, (e) a controller operatively coupled to the first joint, the second joint, and the pair of repositionable jaws, the controller including a first control configured to direct repositioning of at least one of the first member and the second member, and a second control configured to direct repositioning of at least one of the third member and the fourth member, and a third control configured to direct repositioning of the pair of repositionable jaws, the third control including a line operatively coupled to the first and second jaws in at least a gun tackle pulley configuration.

No. of Pages : 111 No. of Claims : 113

(12) PATENT APPLICATION PUBLICATION
(21) Application No.2679/MUM/2015 A
(19) INDIA
(22) Date of filing of Application :15/07/2015
(43) Publication Date : 20/01/2017

(54) Title of the invention : AN IMPROVED GIANT MAGNETO-IMPEDANCE (GMI) BASED SENSING DEVICE FOR THE DETECTION OF CARBURIZATION IN AUSTENITIC STAINLESS STEEL

(51) International classification :G01N
(31) Priority Document No :NA
(32) Priority Date :NA
(33) Name of priority country :NA
(86) International Application No :NA
Filing Date :NA
(87) International Publication No : NA
(61) Patent of Addition to Application Number :NA
Filing Date :NA
(62) Divisional to Application Number :NA
Filing Date :NA

(71)**Name of Applicant :**
1)Indian Oil Corporation Limited
Address of Applicant :G-9, Ali Yavar Jung Marg, Bandra (East), Mumbai-400 051, India Maharashtra India
2)Council of Scientific and Industrial Research
(72)**Name of Inventor :**
1)BHATTACHARYA, Sova
2)AMIR, Qazi Mohammad
3)KANNAN, Chandrasekaran
4)KUMAR, Brijesh
5)DAS, Biswapriya
6)PANDA, Ashish Kumar
7)ROY, Rajat Kumar
8)DAS, Tarun Kumar
9)DAS, Swapan Kumar
10)MITRA, Amitava

(57) Abstract :
The present invention relates to a compound exhibiting Giant Magneto-Impedance (GMI) properties. The general chemical formula of the compound is (FeXCo100-X)100-(a++)CraSiB, characterized in that a< and a<, wherein a is preferably in the range of 2 to 4% by weight, is preferably in the range of 11.5% to 13% by weight, and is preferably in the range of 11% to 13% by weight, and X is preferably about 6% by weight. The chemical formula more preferably is (Fe6%Co94%)72.5%Cr2% Si12.5%B13%. The present invention also relates to a giant magneto-impedance (GMI) based sensing device for non-destructive contactless detection of carburization in austenitic stainless steel samples in field.

No. of Pages : 20 No. of Claims : 18

(12) PATENT APPLICATION PUBLICATION
(19) INDIA
(22) Date of filing of Application :15/07/2015

(21) Application No.2672/MUM/2015 A
(43) Publication Date : 20/01/2017

(54) Title of the invention : AUTOMATIC TOLL COLLECTION USING RF COMMUNICATION

(51) International classification :G07B
(31) Priority Document No :NA
(32) Priority Date :NA
(33) Name of priority country :NA
(86) International Application No :NA
Filing Date :NA
(87) International Publication No : NA
(61) Patent of Addition to Application Number :NA
Filing Date :NA
(62) Divisional to Application Number :NA
Filing Date :NA

(71)**Name of Applicant :**
1)Sandip Foundation™s Sandip Institute of Technology & Research Centre
Address of Applicant :Sandip institute of Technology & Research Centre, Mahiravani, Trimbak road, Nashik, Maharashtra Maha ashtra India
(72)**Name of Inventor :**
1)Prof. Mukesh P. Mahajan
2)Komal V. Pardeshi

(57) Abstract :
The present invention relates to an automatic toll collection system using RF communication for vehicles adapted to operate using mobile communication infrastructure to achieve toll collection. Based on road side message exchange concept, the dedicated short range communication (DSRC) technology is developed to adopt radio frequency (RF) communication to broadcast road information to vehicle. The RF technology is applied with mobile communication in location and tracking for ITS. This system proposes a feasible solution of ETC using mobile communication infrastructure to achieve toll collection. Following invention is described in detail with the help of Figure 1 of sheet 1 shows the block diagram for electronic toll collection system, Figure 2 of sheet 2 shows the diagram for sequence diagram for the toll collection system and Figure 3 of the sheet 3 shows the diagram for the circuit diagram.

No. of Pages : 13 No. of Claims : 2

(12) PATENT APPLICATION PUBLICATION
(19) INDIA
(22) Date of filing of Application :15/07/2015

(21) Application No.2673/MUM/2015 A
(43) Publication Date : 20/01/2017

(54) Title of the invention : E-ROAD CONSTRUCTION USING LOW POWER MICROCONTROLLER

(51) International classification :G06F
(31) Priority Document No :NA
(32) Priority Date :NA
(33) Name of priority country :NA
(86) International Application No :NA
Filing Date :NA
(87) International Publication No : NA
(61) Patent of Addition to Application Number :NA
Filing Date :NA
(62) Divisional to Application Number :NA
Filing Date :NA

(71)**Name of Applicant :**
1)Sandip Foundation™s Sandip Institute of Technology & Research Centre
Address of Applicant :Sandip institute of Technology & Research Centre, Mahiravani, Trimbak road, Nashik, Maharashtra Maharashtra India
(72)**Name of Inventor :**
1)Prof. J. A. Patel
2)Amruta Jadhav
3)Prateeksha Salian
4)Snehal Vikhe
5)Shital Yeole

(57) Abstract :
The present invention relates to an systems and methods for the e-road construction. From the perspective of a construction company, quality management in construction projects should mean maintaining the quality of construction works. Generally in government construction corruption may happen. Corruption is dishonesty and illegal behaviour by people in position of authority and power. So the present invention provides the database and automation system for road construction to avoid corruption. Following invention is described in detail with the help of Figure 1 of sheet 1 shows the sequence diagram for the e-road construction system and Figure 2 of sheet 1 shows the schematic representation of the proposed system.

No. of Pages : 13 No. of Claims : 2

(12) PATENT APPLICATION PUBLICATION
(19) INDIA
(22) Date of filing of Application :15/07/2015
(21) Application No.2674/MUM/2015 A
(43) Publication Date : 20/01/2017

(54) Title of the invention : IC ENGINE EXHAUST POWERED EJECTOR REFRIGERATION SYSTEM FOR AUTOMOBILE AIR CONDITIONING

(51) International classification	:F02B 3/00
(31) Priority Document No	:NA
(32) Priority Date	:NA
(33) Name of priority country	:NA
(86) International Application No	:NA
Filing Date	:NA
(87) International Publication No	: NA
(61) Patent of Addition to Application Number	:NA
Filing Date	:NA
(62) Divisional to Application Number	:NA
Filing Date	:NA

(71)**Name of Applicant :**
1)Sandip Foundation™s Sandip Institute of Technology & Research Centre
Address of Applicant :Sandip institute of Technology & Research Centre, Mahiravani, Trimbak road, Nashik, Maharashtra Maharashtra India
(72)**Name of Inventor :**
1)ALAI SHASHANK PRAMOD
2)PAREKH SHREYAS ABHAY
3)MISHRA SATYAM
4)PROF. P. R. HATTE

(57) Abstract :
An automobile AC consumes about one-tenth of the total fuel. This is a significant cost for the vehicle owners who travel round the clock running. It addresses this challenge by designing an AC that may be able to run itself by using waste heat from the automobile exhaust. It may therefore make the running of an automobile more economical. The utilization of exhaust waste heat is now well known and the forms the basis of many combined cooling and power installations. The exhaust gases from such installations represent a significant amount of thermal energy that traditionally has been used for combined heat and power applications. For this purpose, an ejector refrigeration system is proposed in this invention that will work on the heat that gets wasted from the exhaust of an IC engine. Ejector refrigeration system is a low grade heat operated cooling system which could be run even by the exhausted heat from a four cylinder diesel engine. The cooling of vehicle interior can be achieved without investing any additional work or heat. This would result in improved performance of the engine along with required cooling. Following invention is described in detail with the help of Figure 1 of sheet 1 showing block diagram of setup of the proposed system.

No. of Pages : 16 No. of Claims : 1

(12) PATENT APPLICATION PUBLICATION
(21) Application No.201624024111 A
(19) INDIA
(22) Date of filing of Application :14/07/2016
(43) Publication Date : 20/01/2017

(54) Title of the invention : CEILING FAN

(51) International classification	:F04D25/08, F24F7/007
(31) Priority Document No	:2015-141547
(32) Priority Date	:15/07/2015
(33) Name of priority country	:Japan
(86) International Application No	:NA
Filing Date	:NA
(87) International Publication No	: NA
(61) Patent of Addition to Application Number	:NA
Filing Date	:NA
(62) Divisional to Application Number	:NA
Filing Date	:NA

(71)**Name of Applicant :**
1)Nidec Corporation
Address of Applicant :338 Kuzetonoshiro-cho, Minami-ku, Kyoto 601-8205 Japan
(72)**Name of Inventor :**
1)Satoru KURAMOTO
2)Seiichi OYAMA
3)Takashi UCHINO
4)Yukinobu SHIRAISHI
5)Tatsuya ITO

(57) Abstract :
A ceiling fan includes rotor blades and a motor including a shaft and a rotor portion arranged to rotate with respect to the shaft. The rotor portion includes a top plate portion provided with screw holes. Each rotor blade includes through holes, and is fixed to the top plate portion with screws screwed into the corresponding screw holes through the through holes. A gap is defined between each screw and a wall surface of the corresponding through hole. Each rotor blade is fixed with a top end thereof slanting forward or rearward with respect to a rotation direction relative to a base side at a fitting slant angle because of unevenness of the gaps. The volume of air blown by the rotor blades varies with the fitting slant angle, and the rate of change in the volume of air is different depending on whether the fitting slant angle varies forward or rearward with respect to the rotation direction from a value of the fitting slant angle that produces a maximum air volume. The rotor blades are arranged to blow equivalent volumes of air when each rotor blade is fixed in a forward end fixing position, in which the rotor blade slants most forward with respect to the rotation direction, and when each rotor blade is fixed in a rearward end fixing position, in which the rotor blade slants most rearward with respect to the rotation direction. Ref. Fig.: Fig. 2.

No. of Pages : 43 No. of Claims : 7

(12) PATENT APPLICATION PUBLICATION
(21) Application No.201627021717 A
(19) INDIA
(22) Date of filing of Application :24/06/2016
(43) Publication Date : 20/01/2017

(54) Title of the invention : INK COMPOSITION FOR HIGH QUALITY AND HIGH RESOLUTION SCREEN PRINTING PRINTED ARTICLE OBTAINED BY SCREEN PRINTING WITH SAME AND METHOD FOR PRODUCING SAID PRINTED ARTICLE

(51) International classification :C09D11/03,B41M1/12,B41M1/26
(31) Priority Document No :2015013207
(32) Priority Date :27/01/2015
(33) Name of priority country :Japan
(86) International Application No :PCT/JP2015/065426
Filing Date :28/05/2015
(87) International Publication No :WO 2016/121141
(61) Patent of Addition to Application Number :NA
Filing Date :NA
(62) Divisional to Application Number :NA
Filing Date :NA

(71)**Name of Applicant :**
1)TEIKOKU PRINTING INKS MFG. CO. LTD
Address of Applicant :4 12 Mita 4 chome Minato ku Tokyo 1080073 Japan
(72)**Name of Inventor :**
1)OGATA Tomomi
2)TORIHATA Takuya
3)TAKADA Naoto

(57) Abstract :
The present invention addresses the problem of achieving both sharpness and leveling properties in an image edge section of a solid pattern in a printed article in order to increase quality and resolution and improve the visibility of a printed image in which a fine pattern and a solid pattern are both present. The abovementioned problem is solved by the use of an ink composition for screen printing in which 70% or more of the total solvents by weight is a solvent having a boiling point of 170 °C or more 2% by weight or more of the total amount of the ink composition is a pre polymer or a polymer having a weight average molecular weight of 2 000 or more the viscosity at 25 °C according to a BH type rotational viscometer is 30 180 Pa·s and the thixotropic index is 2.0 8.0. The ink composition for screen printing makes it possible to produce a printed article in which the undercut width of the edge of a printed image is within 10 µm relative to the image design dimensions of a printing plate when a printed article is produced by screen printing on a printing substrate using a 360 mesh screen printing plate made from high strength non deformable stainless steel mesh having a wire diameter of 25 µm.

No. of Pages : 24 No. of Claims : 9

(12) PATENT APPLICATION PUBLICATION
(19) INDIA
(22) Date of filing of Application :16/07/2015
(21) Application No.2697/MUM/2015 A
(43) Publication Date : 20/01/2017

(54) Title of the invention : FIXTURE FOR BLADE MACHINING

(51) International classification :B23Q
(31) Priority Document No :NA
(32) Priority Date :NA
(33) Name of priority country :NA
(86) International Application No :NA
Filing Date :NA
(87) International Publication No : NA
(61) Patent of Addition to Application Number :NA
Filing Date :NA
(62) Divisional to Application Number :NA
Filing Date :NA

(71)**Name of Applicant :**
1)L&T-MHPS TURBINE GENERATORS PRIVATE LIMITED
Address of Applicant :Gate No. 8, Hazira Works (West), Surat Hazira Road, P.O. Bhatha, Surat 394 510, Gujarat, INDIA Gujarat India
(72)**Name of Inventor :**
1)BOLIYA, Suresh Bhopabhai
2)REDDY, Prathap T
3)BORSE, Devayani Madhukar

(57) Abstract :
The present invention discloses a single body fixture apparatus for machining of inner ring and outer ring of a blade on a 3-axis machine with a rotary indexing ta-ble. The fixture apparatus holds the blade in vertical position wherein the fixture ap-paratus comprises a first extension arm at a first extreme end of the fixture apparatus and a second extension arm at a second extreme end of the fixture apparatus. The blade is fixed to the fixture apparatus using clamping bolts.

No. of Pages : 16 No. of Claims : 16

(12) PATENT APPLICATION PUBLICATION
(19) INDIA
(22) Date of filing of Application :28/12/2016
(21) Application No.201627044535 A
(43) Publication Date : 20/01/2017

(54) Title of the invention : METHOD AND APPARATUS FOR SYNCHRONIZING DATA INPUTS GENERATED AT A PLURALITY OF FREQUENCIES BY A PLURALITY OF DATA SOURCES

(51) International classification :G06F13/38
(31) Priority Document No :62/035613
(32) Priority Date :11/08/2014
(33) Name of priority country :U.S.A.
(86) International Application No :PCT/US2015/041918
Filing Date :24/07/2015
(87) International Publication No :WO 2016/025140
(61) Patent of Addition to Application Number :NA
Filing Date :NA
(62) Divisional to Application Number :NA
Filing Date :NA

(71)**Name of Applicant :**
1)QUALCOMM INCORPORATED
Address of Applicant :ATTN: International IP Administration 5775 Morehouse Drive San Diego California 92121 1714 U.S.A.
(72)**Name of Inventor :**
1)GLICKFIELD Sarah
2)GUEDALIA Isaac David
3)SCHWARTZ Adam

(57) Abstract :
Methods and apparatuses are disclosed for synchronizing data inputs generated at a plurality of frequencies by a plurality of data sources. A device receives a first set of data points from a first data source of the plurality of data sources generated at a first frequency of the plurality of frequencies receives a second set of data points from a second data source of the plurality of data sources generated at a second frequency of the plurality of frequencies selects a time window corresponding to a period of time during which at least a subset of the first set of data points and at least a subset of the second set of data points were generated and generates a vector representing a first reduced form of the subset of the first set of data points and a second reduced form of the subset of the second set of data points.

No. of Pages : 36 No. of Claims : 30

(12) PATENT APPLICATION PUBLICATION
(19) INDIA
(22) Date of filing of Application :28/12/2016
(21) Application No.201627044546 A
(43) Publication Date : 20/01/2017

(54) Title of the invention : APPARATUSES METHODS AND SYSTEMS FOR ENABLING HIGHER CURRENT CHARGING OF UNIVERSAL SERIAL BUS (USB) SPECIFICATION REVISION 2.0 (USB 2.0) PORTABLE ELECTRONIC DEVICES FROM USB 3.X HOSTS

(51) International classification :G06F1/26
(31) Priority Document No :14/444443
(32) Priority Date :28/07/2014
(33) Name of priority country :U.S.A.
(86) International Application No :PCT/US2015/042006
Filing Date :24/07/2015
(87) International Publication No :WO 2016/018753
(61) Patent of Addition to Application Number :NA
Filing Date :NA
(62) Divisional to Application Number :NA
Filing Date :NA

(71)**Name of Applicant :**
1)QUALCOMM INCORPORATED
Address of Applicant :ATTN: International IP Administration 5775 Morehouse Drive San Diego California 92121 1714 U.S.A.
(72)**Name of Inventor :**
1)PATNAIK Devdutt
2)CHOI Jay Yu Jae
3)REMPLE Terrence Brian

(57) Abstract :
Apparatuses methods and systems for enabling higher current charging of Universal Serial Bus (USB) Specification Revision 2.0 (USB 2.0) portable electronic devices from USB 3.x hosts are disclosed. In one aspect a USB 2.0 controller is provided in a USB 2.0 portable device. A USB 3.x controller is provided in a USB 3.x host. The USB 2.0 controller is configured to draw a higher charging current than specified in USB 2.0 for the USB 2.0 portable device over a USB 2.0 cable. In order to draw the higher charging current without violating USB 2.0 the USB 2.0 controller is configured to use one or more reserved elements in an existing USB 2.0 descriptor(s) or bitmap(s) to indicate a higher charging current request from the USB 2.0 controller.

No. of Pages : 22 No. of Claims : 30

(12) PATENT APPLICATION PUBLICATION
(19) INDIA
(22) Date of filing of Application :28/12/2016
(21) Application No.201627044547 A
(43) Publication Date : 20/01/2017

(54) Title of the invention : ENROLLMENT AND AUTHENTICATION ON A MOBILE DEVICE

(51) International classification :G06K9/00
(31) Priority Document No :62/029265
(32) Priority Date :25/07/2014
(33) Name of priority country :U.S.A.
(86) International Application No :PCT/US2015/042150
Filing Date :25/07/2015
(87) International Publication No :WO 2016/015034
(61) Patent of Addition to Application Number :NA
Filing Date :NA
(62) Divisional to Application Number :NA
Filing Date :NA

(71)**Name of Applicant :**
1)QUALCOMM INCORPORATED
Address of Applicant :ATTN : International IP Administration 5775 Morehouse Drive San Diego CA 92121 1714 U.S.A.
(72)**Name of Inventor :**
1)LI Ming
2)KIEFER Frederick W.
3)SCHNEIDER John Keith
4)SHENG Tao
5)DOS REMEDIOS Alwyn

(57) Abstract :
Systems and methods for biometric authentication are disclosed. The invention may be used to authenticate an individual. At least two enrollment templates may be obtained at different times. Later an inquiry template may be obtained and compared to each of the enrollment templates in separate and distinct comparison operations. The match scores arising from the comparison operations may be fused to provide a composite match score. The composite match score may be compared to an acceptance range. If the composite match score is within the acceptance range the individual may be authenticated.

No. of Pages : 31 No. of Claims : 30

(12) PATENT APPLICATION PUBLICATION
(21) Application No.2721/MUM/2015 A
(19) INDIA
(22) Date of filing of Application :18/07/2015
(43) Publication Date : 20/01/2017

(54) Title of the invention : METHODS AND SYSTEMS FOR LANDING OF UNMANNED AERIAL VEHICLE

(51) International classification	:G05D 1/00
(31) Priority Document No	:NA
(32) Priority Date	:NA
(33) Name of priority country	:NA
(86) International Application No	:NA
Filing Date	:NA
(87) International Publication No	: NA
(61) Patent of Addition to Application Number	:NA
Filing Date	:NA
(62) Divisional to Application Number	:NA
Filing Date	:NA

(71)**Name of Applicant :**
1)Tata Consultancy Services Limited
Address of Applicant :Nirmal Building, 9th Floor, Nariman Point, Mumbai 400021, Maharashtra, India Maharashtra India
(72)**Name of Inventor :**
1)SHARMA, Hrishikesh
2)PURUSHOTHAMAN, Balamuralidhar

(57) Abstract :
A system and a method for landing of an Unmanned Aerial Vehicle (UAV) are provided. The method includes estimating a 3-dimensional (3D) location of at least one media sensor mounted on the UAV relative to a marker representative of a landing location of the UAV. The marker comprises a recursive geometrical pattern. The landing of the UAV on the marker at the landing location is facilitated based on the 3D location of the at least one media sensor mounted on the UAV relative to the marker.

No. of Pages : 31 No. of Claims : 20

(12) PATENT APPLICATION PUBLICATION
(19) INDIA
(22) Date of filing of Application :14/07/2016
(21) Application No.201624024140 A
(43) Publication Date : 20/01/2017

(54) Title of the invention : REVERSE OSMOSIS PUSH FILTER WITH FLOATING KEY LOCK

(51) International classification :C02F1/44, B01D61/08, B01D29/96
(31) Priority Document No :14/800,725
(32) Priority Date :16/07/2015
(33) Name of priority country :U.S.A.
(86) International Application No :NA
Filing Date :NA
(87) International Publication No : NA
(61) Patent of Addition to Application Number :NA
Filing Date :NA
(62) Divisional to Application Number :NA
Filing Date :NA

(71)**Name of Applicant :**
1)KX Technologies LLC
Address of Applicant :55 Railroad Avenue, West Haven, Connecticut 06516, U.S.A.
(72)**Name of Inventor :**
1)SHERMAN, Michael J.
2)HAEHN, Steven J.
3)KLIMPEL, Erik R.
4)HUDA, Stephen P.

(57) Abstract :
[00145] Areverse osmosis filterassemblyforfluidfiltrationhavingapush-activatedlockandrelease mechanism.A push filter design activatesafloatingkeylock upon insertion and extraction, wherethefilter keymay beusedsimultaneouslyasalockandasanidentifierforparticular filterattributes.Thefilter basemay besituatedinline,andinfluidcommunication,withthe raw water ingress, permeate egress, and reject water egress.Thereverse osmosis filterhousingassembly may beattachedto,andremovedfrom,thefilterbaseby a push-actuatedrelease.Uponinsertion,thefilterkeyshiftsthefilterlocklongitudinally toreceive interlocking segments.Uponextraction,thesameaxialpushshiftsthefilterlockfurtherto alignthe interlocking fingerswithingapsthatallowforeasy extraction.Thespecifickey lockdesignallowsa usertoidentify andmatchcertainfilterconfigurationsreceivedby themechanicalsupport,andreject other filter configurations.

No. of Pages : 61 No. of Claims : 23

(12) PATENT APPLICATION PUBLICATION
(21) Application No.201624024259 A
(19) INDIA
(22) Date of filing of Application :15/07/2016
(43) Publication Date : 20/01/2017

(54) Title of the invention : DNA METHYLATION DETECTION

(51) International classification :C12Q1/68
(31) Priority Document No :62/192,987
(32) Priority Date :15/07/2015
(33) Name of priority country :U.S.A.
(86) International Application No :NA
Filing Date :NA
(87) International Publication No : NA
(61) Patent of Addition to Application Number :NA
Filing Date :NA
(62) Divisional to Application Number :NA
Filing Date :NA

(71)**Name of Applicant :**
1)OriZhan Bioscience Limited
Address of Applicant :11F., No.1, Songzhi Rd., Xinyi Dist., Taipei City 110, Taiwan (R.O.C.) Taiwan
(72)**Name of Inventor :**
1)CHAN, HARDY WAI-HONG
2)YANG, YUH-SHYONG
3)CHEN, WEN-YIH

(57) Abstract :
The present invention relates to a method for detecting methylation of a target oligonucleotide molecule. The method comprises obtaining an electrical change occurring due to the binding of an electrically charged methylation detecting molecule and the target oligonucleotide molecule; wherein the electrically charged methylation detecting molecule has affinity to a methylated cytosine nucleotide. The invention improves the detection sensitivity and accuracy of the oligonucleotide methylation detection. Figure 1 is the representative figure.

No. of Pages : 47 No. of Claims : 28

(12) PATENT APPLICATION PUBLICATION
(19) INDIA
(22) Date of filing of Application :15/07/2016
(21) Application No.201624024288 A
(43) Publication Date : 20/01/2017

(54) Title of the invention : DETECTION COMPRISING SIGNAL AMPLIFIER

(51) International classification :G01N33/566
(31) Priority Document No :62/192,987
(32) Priority Date :15/07/2015
(33) Name of priority country :U.S.A.
(86) International Application No :NA
Filing Date :NA
(87) International Publication No : NA
(61) Patent of Addition to Application Number :NA
Filing Date :NA
(62) Divisional to Application Number :NA
Filing Date :NA

(71)**Name of Applicant :**
1)OriZhan Bioscience Limited
Address of Applicant :11F., No.1, Songzhi Rd., Xinyi Dist., Taipei City 110, Taiwan (R.O.C.) Taiwan
(72)**Name of Inventor :**
1)CHAN, HARDY WAI-HONG
2)YANG, YUH-SHYONG
3)CHEN, WEN-YIH

(57) Abstract :
The present invention relates to a method for detecting a target molecule, comprising forming a capturing complex comprising the target molecule; and binding the capturing complex with a signal amplifier, wherein the capturing complex has a net electrical charge; the signal amplifier has affinity to the capturing complex and has a like net electrical charge of the net electrical charge of the capturing complex. The invention improves the detection sensitivity and sensing limit of the detection. Figure 1 is the representative figure.

No. of Pages : 28 No. of Claims : 27

(12) PATENT APPLICATION PUBLICATION
(21) Application No.201624024289 A
(19) INDIA
(22) Date of filing of Application :15/07/2016
(43) Publication Date : 20/01/2017

(54) Title of the invention : PARTIALLY NEUTRAL SINGLE-STRANDED OLIGONUCLEOTIDE

(51) International classification	:C12N15/90, C12N15/87, C07H21/00
(31) Priority Document No	:62/192,987
(32) Priority Date	:15/07/2015
(33) Name of priority country	:U.S.A.
(86) International Application No	:NA
Filing Date	:NA
(87) International Publication No	: NA
(61) Patent of Addition to Application Number	:NA
Filing Date	:NA
(62) Divisional to Application Number	:NA
Filing Date	:NA

(71)**Name of Applicant :**
1)OriZhan Bioscience Limited
Address of Applicant :11F., No.1, Songzhi Rd., Xinyi Dist., Taipei City 110, Taiwan (R.O.C.) Taiwan
(72)**Name of Inventor :**
1)CHAN, HARDY WAI-HONG
2)YANG, YUH-SHYONG
3)CHEN, WEN-YIH

(57) Abstract :
The present invention relates to a detection unit comprising a solid surface and a partially neutral single-stranded oligonucleotide comprising a first portion. The first portion is attached to the solid surface; the length of the first portion is about 50% of the total length of the partially neutral single-stranded oligonucleotide; and the first portion comprises at least one neutral nucleotide and at least one unmodified nucleotide. The invention improves the detection sensitivity and accuracy of the detection of biomolecules. Figure 1 is the representative figure.

No. of Pages : 47 No. of Claims : 20

(12) PATENT APPLICATION PUBLICATION
(21) Application No.906/MUM/2015 A
(19) INDIA
(22) Date of filing of Application :19/03/2015
(43) Publication Date : 20/01/2017

(54) Title of the invention : FPGA BASED UNIVERSAL ATM CARD

(51) International classification	:H04L12/70, H04L29/08
(31) Priority Document No	:NA
(32) Priority Date	:NA
(33) Name of priority country	:NA
(86) International Application No	:NA
Filing Date	:NA
(87) International Publication No	: NA
(61) Patent of Addition to Application Number	:NA
Filing Date	:NA
(62) Divisional to Application Number	:NA
Filing Date	:NA

(71)**Name of Applicant :**
1)UJWAL R. SHIRODE
Address of Applicant :52/A SHASTRI NAGAR, JALGAON-425002 Maharashtra India
2)AJAY S. GADHE
3)AVINASH DWIVEDI
4)SAURABH GANDHE
5)KIMAYA GAIKWAD
(72)**Name of Inventor :**
1)UJWAL R. SHIRODE
2)AJAY S. GADHE
3)AVINASH DWIVEDI
4)SAURABH GANDHE

(57) Abstract :
Automated teller machine (ATM) is now a day's widely used to perform transactions such as dispensing cash, accepting deposits, making account balance inquiries, paying bills, and transferring funds between accounts. Now a day, People carry many types of cards with them every day. The cards include credit cards, debit cards, drivers' licenses, ATM cards, transportation passes, building access cards, and many other types of cards. These cards are typically carried in a wallet or purse. A person may need to use any number of cards during the course of a day. Since people do not know which of the cards will be needed on any given day, most people carry all the cards that they may need with them every day. With the proliferation of card-capable terminals, people can end up carrying an inordinate amount of cards with them every J day. A person who carries a wallet or purse also has to secure the contents of the wallet or purse at all times to protect against theft and fraud. If a card is lost or stolen, it can be used in unauthorized ways, leading to identification theft, fraud, or financial loss. In addition, as many transactions are increasingly performed without the need of physically possessing the card (e.g., online purchases), the mere exposure of the information found on a card to an unauthorized person is a risk to the card holder. There is a need to reduce the number of cards carried by a person, and an opportunity to address that need using universal ATM card which can be accessible securely and swiftly with different ATM systems. In addition, there is a need to secure cards and card information so that cards and card information is not exposed to unauthorized people. In order to have immediate access to these cards, the cards are often physically carried with the owner, such as in a wallet or purse. However, it can be inconvenient to carry a large number of cards. For one thing, large numbers of cards make for a bulky wallet. Also, it is time consuming to search through a wallet or purse for the desired card from a variety of cards that are all of the same size. Further, if a particular card is lost or stolen from a wallet or purse containing a large number of cards, it may be a long time before the owner discovers the disappearance of the particular card, especially if that card is not used every day. In addition, it can be risky to carry a large number of cards in one wallet or purse. When the wallet or purse is stolen, the thief has access to all of the cards contained therein. One solution to some of the above problems that has been proposed is the smart card. A smart card is a card having a processor chip and a memory, wherein the memory may contain data such as the owner's identity and a variety of account information. Although smart cards are not in widespread use for a number of reasons, a person may, in theory, use a single smart card for a number of different uses, such as an identification card, an ATM card, or a credit card. Such a smart card would reduce the number of cards a person would need to carry. An example of a universal magnetic stripe card is disclosed in U.S. Patent No. 09391844, the disclosure of which is incorporated herein by reference.

No. of Pages : 10 No. of Claims : 9

(12) PATENT APPLICATION PUBLICATION
(19) INDIA
(22) Date of filing of Application :05/03/2015
(21) Application No.738/MUM/2015 A
(43) Publication Date : 20/01/2017

(54) Title of the invention : SYSTEM AND METHOD OF DETECTING EXPLOSIVE COMPOUNDS BASED ON RAPID DEFLAGRATION AND DIFFERENTIAL MICRO-CALORIMETRY

(51) International classification :G01K 7/00
(31) Priority Document No :NA
(32) Priority Date :NA
(33) Name of priority country :NA
(86) International Application No :PCT//
Filing Date :01/01/1900
(87) International Publication No : NA
(61) Patent of Addition to Application Number :NA
Filing Date :NA
(62) Divisional to Application Number :NA
Filing Date :NA

(71)**Name of Applicant :**
1)Nanosniff Technologies Pvt. Ltd.
Address of Applicant :SINE, CSRE Bulding, IIT Bombay, Powai, Mumbai 640007, India Maharashtra India
(72)**Name of Inventor :**
1)Nitin S. Kale
2)Nehul Gullaiya
3)Deepali Chandratre
4)Sachin Sangave
5)Hrishikesh Desai
6)V Ramgopal Rao
7)Soumyo Mukherji

(57) Abstract :
An explosive detection system for detecting explosive trace in a sample includes a detection unit, and a processing unit. The detection unit that receives a desorbed sample includes a first heater, a second heater, a first resistance temperature detector (RTD), a second RTD, and an amplifier. The first heater is exposed to the desorbed sample. The first heater and the second heater are supplied with specific voltage for three or more experiments. The first RTD and the second RTD measure changes in resistance due to heating of the first heater and the second heater to calculate voltages across the first RTD and the second RTD. The amplifier amplifies the voltages to calculate a differential voltage for each of the three or more experiments, and converts the differential voltage into a digital signal. The processing unit is configured to process the digital signal to detect explosive trace in the desorbed sample.

No. of Pages : 43 No. of Claims : 10

(12) PATENT APPLICATION PUBLICATION
(21) Application No.201624013950 A
(19) INDIA
(22) Date of filing of Application :21/04/2016
(43) Publication Date : 20/01/2017

(54) Title of the invention : HOLE CAP

(51) International classification :F16B37/14
(31) Priority Document No :2015-140330
(32) Priority Date :14/07/2015
(33) Name of priority country :Japan
(86) International Application No :NA
Filing Date :NA
(87) International Publication No : NA
(61) Patent of Addition to Application Number :NA
Filing Date :NA
(62) Divisional to Application Number :NA
Filing Date :NA

(71)**Name of Applicant :**
1)HITACHI-OMRON TERMINAL SOLUTIONS, CORP.
Address of Applicant :6-3, Osaki 1-chome, Shinagawa-ku, Tokyo 1418576, Japan Japan
(72)**Name of Inventor :**
1)Yukinobu OKADA

(57) Abstract :
To ensure stable interlocking force even if the margin of the dimension of the cap relative to the hole is increased. The hole cap includes a head part formed in a size for covering an hole to be inserted, and an insertion part having an external shape that is smaller than the head part and formed to be insertable into the hole, wherein the insertion part is configured from a shaft that is fixed at a center part of a surface of the head part covering the hole, and a plurality of ribs formed at an outer circumferential end of the shaft, and the each rib is formed by maintaining a space between the rib itself and the head part, a distance from a center of the shaft to a front end thereof is set to be greater than a radius of the hole, and an overlapping margin of a front end side of each of the ribs and an edge of the hole is configured to be an amount of overlap corresponding to an amount of deflection when each of the ribs is inserted.

No. of Pages : 27 No. of Claims : 7

(12) PATENT APPLICATION PUBLICATION
(21) Application No.201627044663 A
(19) INDIA
(22) Date of filing of Application :28/12/2016
(43) Publication Date : 20/01/2017

(54) Title of the invention : RAZOR HAVING ATTACHED SHAVING AID

(51) International classification :B26B21/44
(31) Priority Document No :2014155663
(32) Priority Date :31/07/2014
(33) Name of priority country :Japan
(86) International Application No :PCT/JP2015/071523
Filing Date :29/07/2015
(87) International Publication No :WO 2016/017703
(61) Patent of Addition to Application Number :NA
Filing Date :NA
(62) Divisional to Application Number :NA
Filing Date :NA

(71)**Name of Applicant :**
1)KAI R&D CENTER CO. LTD.
Address of Applicant :1110 Oyana Seki shi Gifu 5013992 Japan
(72)**Name of Inventor :**
1)NAKASUKA Hiroyuki

(57) Abstract :
A razor is provided with a blade assembly part (9) which comprises a blade support part (10) supporting a blade body (14) and a shaving aid (20) wherein an outer frame (16) to which the shaving aid (20) is attached is disposed on the blade support part (10) the shaving aid (20) protrudes from the outer frame (16) the shaving aid (20) itself is provided with a deformable part (22) which may be deformed by contacting the surface of skin during use and has a cantilever shape and a protruding end edge section (23) disposed on the deformable part (22) is opened in a protruding direction (Z) of the shaving aid (20) to be thus exposed to the outside.

No. of Pages : 19 No. of Claims : 15

(12) PATENT APPLICATION PUBLICATION
(21) Application No.749/MUM/2015 A
(19) INDIA
(22) Date of filing of Application :09/03/2015
(43) Publication Date : 20/01/2017

(54) Title of the invention : OIL CAP AND PROCESS FOR MANUFACTURING THEREOF

(51) International classification	:A42B 1/00	(71)**Name of Applicant :**
(31) Priority Document No	:NA	**1)PREMIER ENGINEERS**
(32) Priority Date	:NA	Address of Applicant :B-72, MIDC Area, Waluj, Aurangabad (Maharastra) 431136 INDIA Maharashtra India
(33) Name of priority country	:NA	**2)ENDURANCE TECHNOLOGIES LIMITED**
(86) International Application No	:NA	(72)**Name of Inventor :**
Filing Date	:NA	**1)Rajesh Sanghavi**
(87) International Publication No	: NA	**2)Shrikant Muley**
(61) Patent of Addition to Application Number	:NA	**3)Vishal Pimple**
Filing Date	:NA	**4)Kacharu Khandagale**
(62) Divisional to Application Number	:NA	**5)Vinod Pathare**
Filing Date	:NA	**6)Girish Prabhune**

(57) Abstract :
Present invention relates to a process for manufacturing an oil cap. An oil cap which is an end-cap structure of an oil filter, is processed and designed so as to maintain a reliable sealing. The process comprises folding and piercing of an end of a metal tube in a step-wise manner without involving complicated machineries and investment of raw material. Consequently, the oil cap so produced by the process of present invention is more economic, and has a reliable sealing.

No. of Pages : 13 No. of Claims : 7

(12) PATENT APPLICATION PUBLICATION
(21) Application No.2640/MUM/2015 A
(19) INDIA
(22) Date of filing of Application :13/07/2015
(43) Publication Date : 20/01/2017

(54) Title of the invention : A TRAFFIC RULE MANAGEMENT SYSTEM WHICH PROHIBITS VEHICLES FROM JUMPING THE RED LIGHT AT TRAFFIC SIGNALS AND PREVENTS A PERSON WITHOUT A DRIVER'S LICENSE FROM DRIVING A VEHICLE.

(51) International classification :G08G
(31) Priority Document No :NA
(32) Priority Date :NA
(33) Name of priority country :NA
(86) International Application No :NA
Filing Date :NA
(87) International Publication No : NA
(61) Patent of Addition to Application Number :NA
Filing Date :NA
(62) Divisional to Application Number :NA
Filing Date :NA

(71)**Name of Applicant :**
1)MR. ANIKET MAHENDRA BANSODE
Address of Applicant :ASHA BUNGALOW, PLOT NO. 17, SECTOR NO. 26, OPP. OM SUPER MARKET, NEAR GANESH TALAV, PRADHIKARAN, NIGDI, PUNE-411044, MAHARASHTRA, INDIA. Maharashtra India
(72)**Name of Inventor :**
1)MR. ANIKET MAHENDRA BANSODE

(57) Abstract :
A system for efficient management of traffic rules which will prevent the people from jumping the red light at the traffic signals and also prevent people who do not possess a drivers license with them from driving the particular vehicle, the drivers license comes with a chip installed on it, this particular chip will have the drivers name, contact details, address of that particular person, license number and further details; a scanner is installed on the vehicles which will scan the chip on the drivers license and pass on that information to the Passive Reader Active Tag (PRAT) RFID Module (CX) installed on top of the vehicles; another Active Reader Passive Tag (ARPT) RFID Module (TX) will be installed where the traffic signal is placed; when the traffic signal turns red, the RFID Module (TX) on the traffic signal will be activated and the information from the RFID module (CX) on all vehicles passing below the will be captured by TX and that data will be sent to the server present at the Police Headquarters, as well as an SMS will be sent to the person driving the car who jumped the red light at the traffic signal. The RFID Module pair installed on the vehicle and the one installed at the traffic signal will form an RFID Module Pair (TX + CX); this will help in prevention of the red light being broken at the traffic signals and will also prevent people not having a drivers license from driving a vehicle which will in turn eradicate under age driving and also prevent accidents to a large extent.

No. of Pages : 11 No. of Claims : 8

(12) PATENT APPLICATION PUBLICATION
(21) Application No.201627039076 A
(19) INDIA
(22) Date of filing of Application :16/11/2016
(43) Publication Date : 20/01/2017

(54) Title of the invention : METHOD AND APPARATUS FOR SULFUR RECOVERY

(51) International classification :B01D53/48
(31) Priority Document No :62/000845
(32) Priority Date :20/05/2014
(33) Name of priority country :U.S.A.
(86) International Application No :PCT/CA2015/050447
Filing Date :19/05/2015
(87) International Publication No :WO 2015/176180
(61) Patent of Addition to Application Number :NA
Filing Date :NA
(62) Divisional to Application Number :NA
Filing Date :NA

(71)**Name of Applicant :**
1)WORLEYPARSONS EUROPE LTD.
Address of Applicant :Parkview Great West Road Brentford Middlesex TW8 9AZ U.K.
(72)**Name of Inventor :**
1)NASATO Elmo

(57) Abstract :
A method for treating an acid gas stream in a sulfur recovery system is provided the method including providing a motive fluid to an ejector providing the acid gas stream to the ejector to obtain a mixture the mixture comprising the motive fluid and the acid gas stream providing the mixture to a reaction furnace providing a combustion gas to the reaction furnace the combustion gas comprising oxygen and reacting the contents of the reaction furnace. An apparatus for treating an acid gas stream is also provided.

No. of Pages : 14 No. of Claims : 20

(12) PATENT APPLICATION PUBLICATION
(21) Application No.2680/MUM/2015 A
(19) INDIA
(22) Date of filing of Application :15/07/2015
(43) Publication Date : 20/01/2017

(54) Title of the invention : COOLING UNIT FOR ELECTRICAL AND ELECTRONIC EQUIPMENTS USING EXTRA BROAD, BROAD, NARROW AND FINE CORRUGATED COPPER METAL STRIPS (EBBNFCCMS)

(51) International classification :H01F
(31) Priority Document No :NA
(32) Priority Date :NA
(33) Name of priority country :NA
(86) International Application No :NA
Filing Date :NA
(87) International Publication No : NA
(61) Patent of Addition to Application Number :NA
Filing Date :NA
(62) Divisional to Application Number :NA
Filing Date :NA

(71)**Name of Applicant :**
1)PANCHAL DEVENDRA PRAHALAD
Address of Applicant :PANCHAL DEVENDRA PRAHALAD: C/4 STERLING PLOT 5 SECTOR 1, ROAD:18 NEW PANVEL, NAVI MUMBAI, INDIA 410206 Maharashtra India
2)PAL RIYA BIPRADAS SANCHITA
(72)**Name of Inventor :**
1)PANCHAL DEVENDRA PRAHALAD
2)PAL RIYA BIPRADAS SANCHITA

(57) Abstract :
The invention herein is a cooling unit for electrical and electronics equipments. This cooling unit comprise of a surface attachment strip and corrugated copper metal strip having very high heat exchange property clustered together to form a single cooling unit which is needed for high heat generating electrical and electronics components during working condition. High heat generating components or equipments or modules need material with high heat transfer rate property to cool to the desired level. Here we have applied below mentioned types of corrugated copper strips: 1. Extra Broad Flute Corrugated Copper Metal Strips (EBFCCMS) 2. Broad Flute Corrugated Copper Metal Strips (BFCCMS) 3. Narrow Flute Corrugated Copper Metal Strips (NFCCMS) 4. Fine Flute Corrugated Copper Metal Strips (FFCCMS) Above developed technology can be used in all variety of electrical and electronic components of any shape and size. Example: 1. Laptop chargers. 2. Any portable chargers. 3. Transformers. 4. Choke. 5. AC/DC Motors. 6. Generators. 7. LED Light Modules. 8. Power electronic components like: a. Power Metal Diodes. b. Power IGBTs. c. Power DIACs. d. Power TRIACs. e. Power MOSFETs. f Power Capacitors. g. Power Resistors. h. Power Inductors.

No. of Pages : 19 No. of Claims : 4

(12) PATENT APPLICATION PUBLICATION
(19) INDIA
(22) Date of filing of Application :14/07/2015

(21) Application No.2659/MUM/2015 A
(43) Publication Date : 20/01/2017

(54) Title of the invention : A SYSTEM AND METHOD FOR RISK MANAGEMENT IN A SUPPLY CHAIN

(51) International classification	:G06Q 10/00
(31) Priority Document No	:NA
(32) Priority Date	:NA
(33) Name of priority country	:NA
(86) International Application No	:NA
Filing Date	:NA
(87) International Publication No	: NA
(61) Patent of Addition to Application Number	:NA
Filing Date	:NA
(62) Divisional to Application Number	:NA
Filing Date	:NA

(71)**Name of Applicant :**
1)Tata Consultancy Services Limited
Address of Applicant :Nirmal Building, 9th Floor, Nariman Point, Mumbai 400021, Maharashtra, India Maharashtra India
(72)**Name of Inventor :**
1)SRINIVASAN, Ramakrishnan Sundaram

(57) Abstract :
The present disclosure relates to systems and methods for risk management in a supply chain. The system is configured to maintain a supply chain repository storing an original buffer level, and a master plan. Further, the system is configured to monitor each stage associated with the supply chain to identify at least one of a short term disruption or a long term disruption associated with a stage of the supply chain. Further, the system is configured to resolve the short term disruption by updating the original buffer level of an inventory or by revising the current plan and at least one of the set of future plans associated with the supply chain. Further, the system is configured to resolve the long term disruption in the supply chain using a set of problems and a set of solutions stored in a historical database.

No. of Pages : 30 No. of Claims : 15

(12) PATENT APPLICATION PUBLICATION
(21) Application No.2660/MUM/2015 A
(19) INDIA
(22) Date of filing of Application :14/07/2015
(43) Publication Date : 20/01/2017

(54) Title of the invention : SYSTEM FOR DETECTING CONCENTRATION OF AN ANALYTE BIOMOLECULE IN A SAMPLE AND METHOD THEREOF

(51) International classification	:G01N 33/00	(71)**Name of Applicant :**
(31) Priority Document No	:NA	**1)Nanosniff Technologies Pvt. Ltd.**
(32) Priority Date	:NA	Address of Applicant :SINE, CSRE Bulding, IIT Bombay, Powai, Mumbai Maharashtra India
(33) Name of priority country	:NA	(72)**Name of Inventor :**
(86) International Application No	:NA	**1)Nitin Kale**
Filing Date	:NA	**2)Sumona Dhara**
(87) International Publication No	: NA	**3)Dadasaheb Sangave**
(61) Patent of Addition to Application Number	:NA	**4)Deepali Chandratre**
Filing Date	:NA	**5)Hrishikesh Desai**
(62) Divisional to Application Number	:NA	**6)Nitin Mali**
Filing Date	:NA	**7)Kapil Bardeja**

(57) Abstract :
Various embodiments of the methods and systems disclosed herein provide a detection system that detects concentration of an analyte biomolecule (e.g., a protein, a biomarker, etc.) in a sample (e.g., a blood sample) to diagnose a disease. The detection system includes one or more micro- cantilevers that are immobilized with one or more receptor biomolecules to detect a concentration of an analyte biomolecule in the sample. The detection system further compares the concentration of the analyte biomolecule with a threshold value for diagnosing a disease.

No. of Pages : 57 No. of Claims : 10

(12) PATENT APPLICATION PUBLICATION
(21) Application No.2688/MUM/2015 A
(19) INDIA
(22) Date of filing of Application :15/07/2015
(43) Publication Date : 20/01/2017

(54) Title of the invention : DETECTING PHYSICAL RANDOM ACCESS CHANNEL PREAMBLES IN A LONG TERM EVOLUTION COMMUNICATION SYSTEM

(51) International classification :H04W
(31) Priority Document No :NA
(32) Priority Date :NA
(33) Name of priority country :NA
(86) International Application No :NA
Filing Date :NA
(87) International Publication No : NA
(61) Patent of Addition to Application Number :NA
Filing Date :NA
(62) Divisional to Application Number :NA
Filing Date :NA

(71)**Name of Applicant :**
1)TATA CONSULTANCY SERVICES LIMITED
Address of Applicant :Nirmal Building, 9th Floor, Nariman Point, Mumbai 400021, Maharashtra, India Maharashtra India
(72)**Name of Inventor :**
1)VIRARAGHAVAN, Venkata Subramanian

(57) Abstract :
The present subject matter discloses a method implemented on a base station for generating Physical Random Access Channel (PRACH) reference segments and detecting PRACH preambles in a Long Term Evolution (LTE) communication system. The base station performs a series of mathematical techniques to generate the PRACH reference segments using a CAZAC sequence used for detecting PRACH preambles. Further, the base station identifies the PRACH by using a signal received by the base station. The base station segments the signal to generate contiguous or non-contiguous segments. Further, the base station uses a segment by segment multiplication and subsequent addition approach performed between values at each frequency location of PRACH frequency segments with a complex conjugate of the values at a corresponding frequency location of a PRACH reference segment. Subsequently the products are added together. The sum is then processed to detect one or more PRACH preambles and timing delays.

No. of Pages : 38 No. of Claims : 14

(12) PATENT APPLICATION PUBLICATION
(19) INDIA
(22) Date of filing of Application :15/07/2015
(21) Application No.2689/MUM/2015 A
(43) Publication Date : 20/01/2017

(54) Title of the invention : PROCESS FOR PRODUCING BIOFUEL USING A NOVEL BACTERIAL STRAIN

(51) International classification :C12P
(31) Priority Document No :NA
(32) Priority Date :NA
(33) Name of priority country :NA
(86) International Application No :NA
Filing Date :NA
(87) International Publication No : NA
(61) Patent of Addition to Application Number :NA
Filing Date :NA
(62) Divisional to Application Number :NA
Filing Date :NA

(71)**Name of Applicant :**
1)Hindustan Petroleum Corporation Ltd.
Address of Applicant :Petroleum House • , 17 Jamshedji Tata Road, Churchgate, Mumbai 400020, Maharashtra, India Maharashtra India
(72)**Name of Inventor :**
1)MANJITHAYA, Ravi Ramachandra
2)VELANKAR, Harshad Ravindra
3)REDDY, Bysani Kondagari Viswanada
4)SARIPALLI, Lalitha
5)GANDHAM, SriGanesh
6)RAO, Peddy Venkata Chalapathi
7)CHOUDARY, Nettem Venkateswarlu

(57) Abstract :
Disclosed herein is a process for production of biofuels employing a wild type non-clostridial bacterial wherein, the process comprising isolating and purifying a non-clostridial bacterial strain from soil by repeated sub-culturing in a suitable medium, fermenting the isolated strain under aerobic and anaerobic conditions at optimum temperature and pH to obtain biofuel, collecting the produced biofuel.

No. of Pages : 27 No. of Claims : 15

(12) PATENT APPLICATION PUBLICATION
(19) INDIA
(22) Date of filing of Application :30/11/2016
(21) Application No.201627040993 A
(43) Publication Date : 20/01/2017

(54) Title of the invention : HEAT DISSIPATION DEVICE HEAT DISSIPATION CONTROL METHOD AND CONTROLLER

(51) International classification :H05K7/20
(31) Priority Document No :201410243367.6
(32) Priority Date :03/06/2014
(33) Name of priority country :China
(86) International Application No :PCT/CN2015/070095
Filing Date :05/01/2015
(87) International Publication No :WO 2015/184795
(61) Patent of Addition to Application Number :NA
Filing Date :NA
(62) Divisional to Application Number :NA
Filing Date :NA

(71)**Name of Applicant :**
1)HUAWEI TECHNOLOGIES CO. LTD.
Address of Applicant :Huawei Administration Building Bantian Longgang District Shenzhen Guangdong 518129 China
(72)**Name of Inventor :**
1)LIU Yunju
2)DING Junfeng
3)LI Yao

(57) Abstract :
Disclosed are a heat dissipation device a heat dissipation control method and a controller. The heat dissipation device in the embodiments of the present invention comprises a main water pipe (100) branch water pipes (101) a water pump (103) a sensor (104) and a controller (105) wherein the controller (105) is connected to the sensor (104) and the water pump (103) so that the controller (105) correspondingly adjusts the water pump (103) according to a current pressure difference and a preset pressure difference so as to control the flow of a coolant liquid flowing into each branch water pipe (101) until the absolute value of a difference between the current pressure difference and the preset pressure difference is less than or equal to a preset error amount. By means of the embodiments of the present invention the controller (105) can adjust the flow of the coolant liquid flowing into each branch water pipe (101) according to the difference between the inflow pressure of the coolant liquid flowing into each branch water pipe (101) and the outflow pressure of the coolant liquid flowing out of each branch water pipe (101) thereby effectively ensuring that the flow of the coolant liquid in each branch water pipe (101) is allocated uniformly so that the stability of the heat dissipation device is effectively improved.

No. of Pages : 46 No. of Claims : 15

(12) PATENT APPLICATION PUBLICATION
(19) INDIA
(22) Date of filing of Application :30/11/2016
(21) Application No.201627041023 A
(43) Publication Date : 20/01/2017

(54) Title of the invention : LED DRIVING DEVICE

(51) International classification :H05B37/02,H05B33/08
(31) Priority Document No :1020140108435
(32) Priority Date :20/08/2014
(33) Name of priority country :Republic of Korea
(86) International Application No :PCT/KR2015/007530
Filing Date :21/07/2015
(87) International Publication No :WO 2016/013839
(61) Patent of Addition to Application Number :NA
Filing Date :NA
(62) Divisional to Application Number :NA
Filing Date :NA

(71)**Name of Applicant :**
1)YU Sang Woo
Address of Applicant :409 303 114 Migeum ro Bundang gu Seongnam si Gyeonggi do 463 793 Republic of Korea
(72)**Name of Inventor :**
1)YU Sang Woo

(57) Abstract :
Disclosed is an LED driving device capable of maximally extending the life of an SMPS beyond the life of an LED in an LED driving device comprising the SMPS by preventing a drastic increase of a ripple current of a condenser due to drastic increase in heat of the LED even in a high temperature environment due to LED heat emission.

No. of Pages : 12 No. of Claims : 3

(12) PATENT APPLICATION PUBLICATION
(19) INDIA
(22) Date of filing of Application :15/07/2015
(21) Application No.2671/MUM/2015 A
(43) Publication Date : 20/01/2017

(54) Title of the invention : AUTOMATIC MECHANICAL FLUSH FOR MALE URINALS

(51) International classification :E03D
(31) Priority Document No :NA
(32) Priority Date :NA
(33) Name of priority country :NA
(86) International Application No :NA
Filing Date :NA
(87) International Publication No : NA
(61) Patent of Addition to Application Number :NA
Filing Date :NA
(62) Divisional to Application Number :NA
Filing Date :NA

(71)**Name of Applicant :**
1)Sandip Foundation™s Sandip Institute of Technology & Research Centre
Address of Applicant :Sandip institute of Technology & Research Centre, Mahiravani, Trimbak road, Nashik, Maharashtra Maharashtra India
(72)**Name of Inventor :**
1)Prof. M. S. Hajare
2)Prof. S. U. Gunjal

(57) Abstract :
Present invention provides specially design of a mechanism for automatic mechanical flush for male urinal. This invention is based on the idea of providing clean and hygienic solution for urinal. Many types of urinal designs are available. These urinals are designed to give ease in discharge of water from body. After the discharge, a flush is necessary in urine pot to maintain the cleanliness. The flush are many a times achieved by electrical & electronic means where automatic flush are required, it definitely require electric power source. Other way is a commonly mechanical type, which is purely manual, user needs to operate it. It has been noticed that, people will seldom touch anywhere in a public toilet. To overcome use of electricity power & achieving automation the idea is being presented. For achieving the automatic flush after the urine discharge, the force of gravity by the weight of the person is utilized. Following invention is described in detail with the help of Figure 1 of sheet 1 showing the urinal setup unused and Figure 2 of sheet 2 showing the urinal setup in use.

No. of Pages : 15 No. of Claims : 1

(12) PATENT APPLICATION PUBLICATION
(21) Application No.2719/MUM/2015 A
(19) INDIA
(22) Date of filing of Application :18/07/2015
(43) Publication Date : 20/01/2017

(54) Title of the invention : AN ENERGY EFFICIENT AIR DISPLACEMENT SYSTEM

(51) International classification	:F03D 11/00
(31) Priority Document No	:NA
(32) Priority Date	:NA
(33) Name of priority country	:NA
(86) International Application No	:NA
Filing Date	:NA
(87) International Publication No	: NA
(61) Patent of Addition to Application Number	:NA
Filing Date	:NA
(62) Divisional to Application Number	:NA
Filing Date	:NA

(71)**Name of Applicant :**
1)Dharane, Sidaramappa Shivashankar
Address of Applicant :c/o Malage gururaj rudresh 195, east mangalwar peth, Solapur Near siddheshwar co. bank (head office) Solapur 413002 Maharashtra India
(72)**Name of Inventor :**
1)Dharane, Sidaramappa Shivashankar

(57) Abstract :
Disclosed is a An energy efficient air displacement system which has a capability to rotate with minimum power thereby giving energy efficiency in air circulation in an ambient . Further more the air displacement system has a novel capability offsetting into rotation even when the wind velocity is too low , thereby being capable of generating electrical energy from wind turbine. The air displacement system of the disclosure is useful for any cooling environment , power generation in wind turbines.

No. of Pages : 6 No. of Claims : 7

(12) PATENT APPLICATION PUBLICATION
(21) Application No.201627042892 A
(19) INDIA
(22) Date of filing of Application :16/12/2016
(43) Publication Date : 20/01/2017

(54) Title of the invention : METHOD AND SYSTEM FOR MEASURING LENS DISTORTION

(51) International classification :G01M11/02
(31) Priority Document No :201410302056.2
(32) Priority Date :27/06/2014
(33) Name of priority country :China
(86) International Application No :PCT/CN2015/082496
Filing Date :26/06/2015
(87) International Publication No :WO 2015/197019
(61) Patent of Addition to Application Number :NA
Filing Date :NA
(62) Divisional to Application Number :NA
Filing Date :NA

(71)**Name of Applicant :**
1)QINGDAO GOERTEK TECHNOLOGY CO.LTD.
Address of Applicant :5F No.3 Building Fortune Center No.18 Qinling Road Laoshan District Qingdao Shandong 266061 China
(72)**Name of Inventor :**
1)CHEN Xingyi
2)XU Jianjun
3)NIU Xiliang

(57) Abstract :
The method comprises: providing a test card having a dot matrix pattern of KN dots where K and N are both natural numbers (110); obtaining a distorted image of the test card produced through a lens (120); establishing a planar coordinate system for the distorted image using the top left corner of the distorted image as the coordinate origin the rightward direction from the origin as the positive direction of the x axis and the downward direction from the origin as the positive direction of the Y axis (130); locating the coordinate of the center point of the distorted image and all non center points via scanning and searching and determining the coordinates of the center point and all non center points in the planar coordinate system (140); using the coordinates of the center point and all non center points calculating the distortion of the distorted image using a distortion calculation equation for distorted images thereby obtaining the distortion of the lens (150). Also disclosed is a system for measuring lens distortion. The measurement method and system accelerate the image processing speed and enhance the measurement precision for lens distortion.

No. of Pages : 15 No. of Claims : 10

(12) PATENT APPLICATION PUBLICATION
(19) INDIA
(22) Date of filing of Application :16/12/2016
(21) Application No.201627042906 A
(43) Publication Date : 20/01/2017

(54) Title of the invention : A NOVEL COMPOUND (KS 513) ISOLATED FROM PSEUDOLYSIMACHION ROTUNDUM VAR. SUBINTEGRUM THE COMPOSITION COMPRISING THE SAME AS AN ACTIVE INGREDIENT FOR PREVENTING OR TREATING ALLERGY DISEASE INFLAMMATORY DISEASE ASTHMA OR CHRONIC OBSTRUCTIVE PULMONARY DISEASE AND THE USE THEREOF

(51) International classification :C07H17/04,A61K31/7048,A61K36/80
(31) Priority Document No:1020150085752
(32) Priority Date :17/06/2015
(33) Name of priority country :Republic of Korea
(86) International Application No :PCT/KR2016/006318
Filing Date :15/06/2016
(87) International Publication No :WO 2016/204493
(61) Patent of Addition to Application Number :NA
Filing Date :NA
(62) Divisional to Application Number :NA
Filing Date :NA

(71)**Name of Applicant :**
1)YUNGJIN PHARMACEUTICAL. LTD.
Address of Applicant :1057 Cheonho daero Gangdong gu Seoul 05336 Republic of Korea
2)KOREA RESEARCH INSTITUTE OF BIOSCIENCE AND BIOTECHNOLOGY
(72)**Name of Inventor :**
1)LEE Yongnam
2)YOO Ji seok
3)SHIN Dae hee
4)RYOO Byung hwan
5)OH Sei Ryang
6)AHN Kyung Seop
7)LEE Hyeong Kyu
8)LEE Su Ui
9)SONG Hyuk Hwan
10)RYU Hyung Won

(57) Abstract :
The present invention relates to a novel (1aS 1bS 2S 4S 5aR 6S 6aS) 1a (hydroxymethyl) 4 methoxy 2 (((2S 3R 5S 6R) 3 4 5 trihydroxy 6 (hydroxymethyl)tetrahydro 2H pyran 2 yl)oxy)octahydrooxireno[2 3 :4 5]cyclopenta[1 2 c]pyran 6 yl 4 hydroxybenzoate} (KS 513) the isomer thereof the pharmaceutically acceptable salt or solvates thereof a composition comprising the same as an active ingredient for preventing or treating allergic disease inflammatory disease asthma or chronic obstructive pulmonary disease (COPD) and the use thereof.

No. of Pages : 35 No. of Claims : 7

(12) PATENT APPLICATION PUBLICATION
(19) INDIA
(22) Date of filing of Application :16/07/2015
(21) Application No.2690/MUM/2015 A
(43) Publication Date : 20/01/2017

(54) Title of the invention : NOVEL PROCESS FOR THE PREPARATION OF APIXABAN AND INTERMEDIATES THEREOF

(51) International classification :C07D211/86,C07D471/04
(31) Priority Document No :NA
(32) Priority Date :NA
(33) Name of priority country :NA
(86) International Application No :NA
Filing Date :NA
(87) International Publication No : NA
(61) Patent of Addition to Application Number :NA
Filing Date :NA
(62) Divisional to Application Number :NA
Filing Date :NA

(71)**Name of Applicant :**
1)UNICHEM LABORATORIES LIMITED
Address of Applicant :UNICHEM BHAVAN, PRABHAT ESTATE, OFF. S. V. ROAD, JOGESHWARI (W), MUMBAI-400 102, MAHARASHTRA, INDIA. Maharashtra India
(72)**Name of Inventor :**
1)DR. DHANANJAY D SATHE
2)DR. ARIJIT DAS
3)MR. YASHWANT SURVE
4)MR. RAMDAS N. AHIRE

(57) Abstract :
The present invention refers to novel process for the preparation of Apixaban. Further, the invention also related to a process for the preparation of intermediate of Apixaban from very basic and cheap row material i.e. Aniline which is widely commercially available. The present invention provides process for preparation of Apixaban using a different sequence of synthetic steps and does not involve use of Ullmann reaction.

No. of Pages : 30 No. of Claims : 19

(12) PATENT APPLICATION PUBLICATION
(19) INDIA
(22) Date of filing of Application :14/07/2015

(21) Application No.2662/MUM/2015 A
(43) Publication Date : 20/01/2017

(54) Title of the invention : PROCESS FOR IMMOBILIZING ONE OR MORE RECEPTOR BIOMOLECULES ON ONE OR MORE SOLID SURFACES

(51) International classification :C07C
(31) Priority Document No :NA
(32) Priority Date :NA
(33) Name of priority country :NA
(86) International Application No :NA
Filing Date :NA
(87) International Publication No : NA
(61) Patent of Addition to Application Number :NA
Filing Date :NA
(62) Divisional to Application Number :2660/MUM/2015
Filed on :14/07/2015

(71)**Name of Applicant :**
1)Nanosniff Technologies Pvt. Ltd.
Address of Applicant :SINE, CSRE Bulding, IIT Bombay, Powai, Mumbai 640007, India. Maharashtra India
(72)**Name of Inventor :**
1)Nitin Kale
2)Sumona Dhara
3)Dadasaheb Sangave
4)Deepali Chandratre
5)Hrishikesh Desai
6)Nitin Mali
7)Kapil Bardeja

(57) Abstract :
An asymmetric immobilization process that immobilizes a one or more receptor biomolecules on one or more solid surfaces is provided. The asymmetric immobilization process includes the following steps: (i) activating the one or more solid surfaces using an oxidizing agent; (ii) treating the one or more solid surfaces with aminosilane to obtain a one or more amine functionalized solid surfaces; (iii) treating the one or more receptor biomolecules with a 1-Ethyl-3-(3-dimethylaminopropyl)carbodiimide (EDC) to obtain a one or more site-specific EDC activated receptor biomolecules; and (iv) immobilizing the one or more site-specific EDC activated receptor biomolecules on a first layer of the one or more amine functionalized solid surfaces, wherein the immobilizing comprises treating the one or more site-specific EDC activated receptor biomolecules with amine groups of the first layer of the one or more amine functionalized solid surfaces to form a covalent amide bond.

No. of Pages : 39 No. of Claims : 10

(12) PATENT APPLICATION PUBLICATION
(19) INDIA
(22) Date of filing of Application :17/07/2015

(21) Application No.2702/MUM/2015 A
(43) Publication Date : 20/01/2017

(54) Title of the invention : ROTATING WAS BASIN

(51) International classification	:E03C	(71)**Name of Applicant :**
(31) Priority Document No	:NA	**1)NARENDRA S. SHINDE**
(32) Priority Date	:NA	Address of Applicant :FLAT NO.206, DEVADATTA CO.OP.
(33) Name of priority country	:NA	HSG. SOC., 45/4, KARVENAGAR, PUNE 411052. Maharashtra
(86) International Application No	:NA	India
Filing Date	:NA	(72)**Name of Inventor :**
(87) International Publication No	: NA	**1)NARENDRA S. SHINDE**
(61) Patent of Addition to Application Number	:NA	
Filing Date	:NA	
(62) Divisional to Application Number	:NA	
Filing Date	:NA	

(57) Abstract :
The invention consists of a combination construction(s) of the wash basin & base plate where the combination unit is formed by parts like wash basin(l), water outlet pipe (2), water tap(3) base plate(4), flange with support(5), bearing(6), mounting bolt(7), wall(8), magnet(9) & lock plate(lO). The wash basin(l) is mounted on base plate(4) with the help of flange(5) & bearing(6) where as the base plate(4) is mounted against wall(8) with the help of mounting screws(7). The wash basin(l) is having a guide(la)& is located in a groove(4a) of base plate(4). During usage, the wash basin is rotated through 90 degrees. It increases space for bathing purpose. After usage, the washbasin again rotated in reverse direction so as the length of the washbasin rests against the wall & is held in that position by lock plate & magnet.

No. of Pages : 11 No. of Claims : 1

(12) PATENT APPLICATION PUBLICATION
(19) INDIA
(22) Date of filing of Application :17/07/2015
(21) Application No.2705/MUM/2015 A
(43) Publication Date : 20/01/2017

(54) Title of the invention : NUTRITIONAL SUPPLEMENT AND METHOD OF PREPARATION THEREOF

(51) International classification :A23L
(31) Priority Document No :NA
(32) Priority Date :NA
(33) Name of priority country :NA
(86) International Application No :NA
Filing Date :NA
(87) International Publication No : NA
(61) Patent of Addition to Application Number :NA
Filing Date :NA
(62) Divisional to Application Number :NA
Filing Date :NA

(71)**Name of Applicant :**
1)PARAB, Priya J
Address of Applicant :B1-303, Lok Everest, J.S.D Road, Mulund West, Mumbai 400080, Maharashtra, India Maharashtra India
(72)**Name of Inventor :**
1)PARAB, Priya J

(57) Abstract :
The present invention relates to a nutritional supplement comprising a combination of millets, grains, legumes in specific weight percentages along with at least one additive for providing adequate nutrition to individuals. The present invention further relates to a process for the preparation of such nutritional supplement thereof.

No. of Pages : 20 No. of Claims : 10

(12) PATENT APPLICATION PUBLICATION
(21) Application No.2706/MUM/2015 A
(19) INDIA
(22) Date of filing of Application :17/07/2015
(43) Publication Date : 20/01/2017

(54) Title of the invention : WWC (WALKING WITH CHARGING) SHOES

(51) International classification	:H02J 7/00	
(31) Priority Document No	:NA	
(32) Priority Date	:NA	
(33) Name of priority country	:NA	
(86) International Application No	:NA	
Filing Date	:NA	
(87) International Publication No	: NA	
(61) Patent of Addition to Application Number	:NA	
Filing Date	:NA	
(62) Divisional to Application Number	:NA	
Filing Date	:NA	

(71)**Name of Applicant :**
1)MR. KISHANKUMAR BHARATBHAI KALOLIA
Address of Applicant :OLD KHODIYAR SOCIETY STREET NO.:-2, SAHAKAR MAIN ROAD, NEAR NAVNEET DAIRY STREET, RAJKOT, GUJARAT, INDIA - 360002. Gujarat India
2)MR. KASHYAP BHARATBHAI KALOLIYA
3)DR. ASHISH KOTHARI
(72)**Name of Inventor :**
1)MR. KISHANKUMAR BHARATBHAI KALOLIA
2)MR. KASHYAP BHARATBHAI KALOLIYA

(57) Abstract :
In todays hectic lifestyle health has been seriously hampered due to sedentary work. This paper represents an idea of walking based wearable piezoelectric device that provide as alternate means for powering mobile phone batteries. The mechanism is based on walking, the device promotes human metabolism as well as physical fitness, on contrary charges the mobile battery as well. The portable device comprises of a piezoelectric power generator, connectors for charging different mobile phone batteries.

No. of Pages : 6 No. of Claims : 5

(12) PATENT APPLICATION PUBLICATION
(19) INDIA
(22) Date of filing of Application :17/07/2015
(21) Application No.2711/MUM/2015 A
(43) Publication Date : 20/01/2017

(54) Title of the invention : METHOD AND SYSTEM FOR FACILITATING REAL TIME DETECTION OF LINEAR INFRASTRUCTURAL OBJECTS BY AERIAL IMAGERY

(51) International classification	:G06K 9/00
(31) Priority Document No	:NA
(32) Priority Date	:NA
(33) Name of priority country	:NA
(86) International Application No	:NA
Filing Date	:NA
(87) International Publication No	: NA
(61) Patent of Addition to Application Number	:NA
Filing Date	:NA
(62) Divisional to Application Number	:NA
Filing Date	:NA

(71)**Name of Applicant :**
1)Tata Consultancy Services Limited
Address of Applicant :Nirmal Building, 9th Floor, Nariman Point, Mumbai 400021, Maharashtra, India Maharashtra India
(72)**Name of Inventor :**
1)SHARMA, Hrishikesh
2)VELLAIAPPAN, Adithya
3)PURUSHOTHAMAN, Balamuralidhar

(57) Abstract :
A method and system for facilitating real time detection of linear infrastructural objects in aerial imagery is disclosed. During edge-based segmentation, a seed point pair is marked along the feature boundary by working along the middle vertical cut for each video frame. Along the cut portion, seed point pairs are extracted by pairing up pixels which have a high intensity gradient magnitude, near similar gradient direction, and a high pixel intensity in HSV space. An image is scanned along the gradient direction from each seed point. Local maxima of pixel (x; y) is estimated in the neighborhood window including the orientation, i.e. 3 pixels {(y + 0; x + 1); (y + 1; x +1); (y - 1; x + 1)}. After comparison, seed points that are local maxima in the left- and right 3-neighborhoods are located, and simultaneously considered for growing the boundary, in next iteration.

No. of Pages : 21 No. of Claims : 10

(12) PATENT APPLICATION PUBLICATION
(19) INDIA
(22) Date of filing of Application :27/11/2015
(21) Application No.3390/MUMNP/2015 A
(43) Publication Date : 20/01/2017

(54) Title of the invention : GENE EXPRESSION BIOMARKERS AND THEIR USE FOR DIAGNOSTIC AND PROGNOSTIC APPLICATION IN PATIENTS POTENTIALLY IN NEED OF HDAC INHIBITOR TREATMENT

(51) International classification :C12Q1/68,G01N33/574
(31) Priority Document No :61/827201
(32) Priority Date :24/05/2013
(33) Name of priority country :U.S.A.
(86) International Application No :PCT/EP2014/060532
Filing Date :22/05/2014
(87) International Publication No :WO 2014/187894
(61) Patent of Addition to Application Number :NA
Filing Date :NA
(62) Divisional to Application Number :NA
Filing Date :NA

(71)**Name of Applicant :**
1)4SC AG
Address of Applicant :Am Klopferspitz 19a 82152 Planegg Martinsried Germany
(72)**Name of Inventor :**
1)HERZ Thomas
2)KOHLHOF Hella
3)DOBLHOFER Robert
4)ELMLINGER Martin
5)HOFMANN Hans Peter
6)STAUB Eike
7)ZIMMERMANN Astrid
8)MAIER Thomas
9)GEKELER Volker
10)MOLLENHAUER THEIN Marina
11)WITTENBERGER Timo
12)B–HM Markus
13)BECKERS Thomas (deceased) (his legal heir is BECKERS BARBARA)

(57) Abstract :
The present invention relates to the utilization of one or more genes selected from the group comprising ZFP64 DPP3 CCDC43 HIST2H4A/B KDELC2 and MICALL1 as biomarkers for HDAC inhibitor treatment. The expression and/or change of the aforementioned genes are preferably determined via the respective corresponding mRNA or one or more proteins expressed by the aforementioned genes.

No. of Pages : 114 No. of Claims : 29

(12) PATENT APPLICATION PUBLICATION
(19) INDIA
(22) Date of filing of Application :13/07/2015

(21) Application No.2636/MUM/2015 A
(43) Publication Date : 20/01/2017

(54) Title of the invention : SYSTEM AND METHOD FOR ENERGY SAMPLE FORECASTING OF HVAC-R SYSTEMS

(51) International classification	:F24F 11/00, G05B19/042
(31) Priority Document No	:NA
(32) Priority Date	:NA
(33) Name of priority country	:NA
(86) International Application No	:NA
Filing Date	:NA
(87) International Publication No	: NA
(61) Patent of Addition to Application Number	:NA
Filing Date	:NA
(62) Divisional to Application Number	:NA
Filing Date	:NA

(71)**Name of Applicant :**
1)TATA CONSULTANCY SERVICES LIMITED
Address of Applicant :Nirmal Building, 9th Floor, Nariman Point, Mumbai 400021, Maharashtra, India Maharashtra India
(72)**Name of Inventor :**
1)SRINIVASAN, Shravan
2)VASAN, Arunchandar
3)SARANGAN, Venkatesh
4)SIVASUBRAMANIAM, Anand

(57) Abstract :
A technique for energy sample forecasting of heating, venting and air conditioning-refrigeration (HVAC-R) systems is disclosed. In an example, a first expected energy sample of a HVAC-R system at a first time period is forecasted by modelling actual energy samples of the HVAC-R system at previous time periods using a statistically-based seasonal-autoregressive integrated moving average (SARIMA) model. Further, an anomaly is detected at the first time period when deviation between the first expected energy sample and an actual energy sample at the first time period is greater than a dynamic context sensitive threshold. Also, an expected energy sample at next time period is forecasted by modelling a second expected energy sample of the HVAC-R system at the first time period using the statistically-based SARIMA model upon detecting anomaly. The second expected energy sample is forecasted by modelling the actual energy samples at the previous time periods using a physical model.

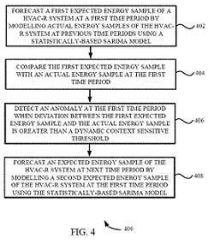

FIG. 4

No. of Pages : 25 No. of Claims : 13

(12) PATENT APPLICATION PUBLICATION
(21) Application No.2637/MUM/2015 A
(19) INDIA
(22) Date of filing of Application :13/07/2015
(43) Publication Date : 20/01/2017

(54) Title of the invention : METHOD AND SYSTEM TO OPTIMIZE ENERGY CONSUMPTION IN A ZONE WITH A MULTI-AIR HANDLING UNIT (AHU) SETUP

(51) International classification	:F24F, 3/00F24F	(71)**Name of Applicant :**
(31) Priority Document No	:NA	**1)TATA CONSULTANCY SERVICES LIMITED**
(32) Priority Date	:NA	Address of Applicant :Nirmal Building, 9th Floor, Nariman Point, Mumbai 400021, Maharashtra, India Maharashtra India
(33) Name of priority country	:NA	(72)**Name of Inventor :**
(86) International Application No	:NA	**1)NAGARATHINAM, Srinarayana**
Filing Date	:NA	**2)IYER, Shiva R**
(87) International Publication No	: NA	**3)P, Venkata Ramakrishna**
(61) Patent of Addition to Application Number	:NA	**4)VASAN, Arunchandar**
Filing Date	:NA	**5)SARANGAN, Venkatesh**
(62) Divisional to Application Number	:NA	**6)SIVASUBRAMANIAM, Anand**
Filing Date	:NA	

(57) Abstract :
A system and method for optimizing energy consumption in a plurality of air handling units (AHUs) in a zone is provided. The system comprising a zone thermal unit that is configured to obtain a first set of input parameters including an internal heat gains, a surface convective loads, an intra-zone mixing, a supply air temperature, a second set of input parameters including internal moisture gains, a supply humidity ratio, and a third set of input parameters including an air contaminant concentration and an ambient contaminant concentration of the AHUs and generates a first set of output parameters including a zone temperature, a humidity ratio and an air concentration. The system further includes an optimizer that is configured to generate a second set of output parameters including an optimum combination of AHU flow rates for the AHUs based on at least one of the first set of output parameters.

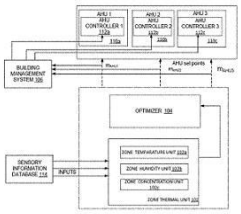

FIG. 1

No. of Pages : 18 No. of Claims : 17

(12) PATENT APPLICATION PUBLICATION
(19) INDIA
(22) Date of filing of Application :08/07/2016
(21) Application No.201644023394 A
(43) Publication Date : 20/01/2017

(54) Title of the invention : SHROUD ASSEMBLY FOR GAS TURBINE ENGINE •

(51) International classification :F01D 11/00
(31) Priority Document No :14/797240
(32) Priority Date :13/07/2015
(33) Name of priority country :U.S.A.
(86) Internat onal Application No :NA
Filing Date :NA
(87) International Publication No : NA
(61) Patent of Addition to Application Number :NA
Filing Date :NA
(62) Divisional to Application Number :NA
Filing Date :NA

(71)**Name of Applicant :**
1)GENERAL ELECTRIC COMPANY
Address of Applicant :1 River Road Schenectady, New York 12345 USA U.S.A.
(72)**Name of Inventor :**
1)STAPLETON, David Scott
2)ARMANIOS, Laura Isabelle
3)HEITMAN, Bryce Loring

(57) Abstract :
ABSTRACT Shroud assemblies (100) for gas turbine engines (10) are provided. A shroud assembly (100) includes a hanger (104) having a forward hanger arm (162), a rear hanger arm (164), and a hanger body (160) extending between the forward hanger arm (162) and the rear hanger arm (164). The shroud assembly (100) further includes a shroud (102) having a forward surface (112), a rear surface (114), and an inner surface (116) and outer surface (118) extending between the forward surface (112) and the rear surface (114), the outer surface (118) radially spaced from the inner surface (116), the shroud (102) connected to the hanger (104). The shroud assembly (100) further includes a support member (200) positioned axially forward of the forward hanger arm (162), the support member (200) having a radially outer portion (2020) connected to the forward hanger arm (162) and a radially inner portion (204) axially spaced from the shroud (102) such that a gap (220) is defined between the radially inner portion (204) and an axially adjacent surface of the shroud (102).

No. of Pages : 27 No. of Claims : 10

(12) PATENT APPLICATION PUBLICATION
(21) Application No.201644023595 A
(19) INDIA
(22) Date of filing of Application :11/07/2016
(43) Publication Date : 20/01/2017

(54) Title of the invention : MICROPERFUSION NEEDLE OR FISTULA NEEDLE WITH PROTECTIVE ELEMENT

(51) International classification :A61B 17/00
(31) Priority Document No :102015000034676
(32) Priority Date :15/07/2015
(33) Name of priority country :Italy
(86) International Application No :NA
Filing Date :NA
(87) International Publication No : NA
(61) Patent of Addition to Application Number :NA
Filing Date :NA
(62) Divisional to Application Number :NA
Filing Date :NA

(71)**Name of Applicant :**
1)Artsana S.p.A.
Address of Applicant :Via Saldarini Catelli 1, 22070 Grandate CO, Italy Italy
(72)**Name of Inventor :**
1)MAURI, Elena
2)FRANCO, Pierluigi
3)POLLACI, Daniele

(57) Abstract :
A microperfusion needle or fistula needle with a protective element comprises a first component (1a) comprising a cannula (5), a body (2) rigidly joined to the cannula (5), and having grasping wings (3) extending therefrom, a second component (1b) comprising an elongate body (8) having a cavity for slidably receiving the first component (1a) between an operating position of the cannula (5) and a safety position of the cannula (5), the elongate body (8) having lateral slots (9) for the grasping wings (3) to extend therethrough, the grasping wings (3) being suitable for elastically bending around and contacting opposed portions of the elongate body (8). The elongate body (8) comprises two arrays of projections (14), which are contacted by the wings (3) when bent. Opposed pairs of projections (14) are designed to contact and mechanically interfere with the grasping wings (3) when bent. [Figure 1]

No. of Pages : 13 No. of Claims : 9

(12) PATENT APPLICATION PUBLICATION
(19) INDIA
(22) Date of filing of Application :11/07/2016
(21) Application No.201644023614 A
(43) Publication Date : 20/01/2017

(54) Title of the invention : ELECTRICAL PLUG CONNECTOR FOR A SAFETY RESTRAINT SYSTEM

(51) International classification	:H01R 13/00
(31) Priority Document No	:15176757.1
(32) Priority Date	:15/07/2015
(33) Name of priority country	:EPO
(86) International Application No	:NA
Filing Date	:NA
(87) International Publication No	: NA
(61) Patent of Addition to Application Number	:NA
Filing Date	:NA
(62) Divisional to Application Number	:NA
Filing Date	:NA

(71)**Name of Applicant :**
1)Delphi International Operations Luxembourg S. r.l.
Address of Applicant :Avenue de Luxembourg, L-4940, Bascharage, Luxembourg Luxembourg
(72)**Name of Inventor :**
1)NUETZEL, Peter
2)GUNREBEN, Michael
3)REGNIER, Vincent
4)ODOERFER, Frank

(57) Abstract :
The present invention relates to an electrical plug connector 1 for a safety restraint system, preferably for an airbag ignition system, wherein the plug connector comprises at least two contact terminals 521, 522 assigned to the plug connector 1 and a shorting clip 530, that is adapted to short-circuit the at least two contact terminals 521, 522 in an uncoupled or incorrectly coupled condition of the plug connector 1 The shorting clip 530 comprises at least two contact blades 533, 534, wherein each contact blade 533, 534 is electrically connected with a respective one of the at least two contact terminals 521, 522, and wherein each of the contact blades 533, 534 comprises at least one cutting edge 535, 536, which cutting edges 535, 536 contact each other, such that one edge cuts the other, when the plug connector 1 is in in an uncoupled or incorrectly coupled condition. (Fig. 1)

No. of Pages : 22 No. of Claims : 16

(12) PATENT APPLICATION PUBLICATION
(21) Application No.201644023750 A
(19) INDIA
(22) Date of filing of Application :12/07/2016
(43) Publication Date : 20/01/2017

(54) Title of the invention : PROCESS FOR THE TREATMENT OF A HYDROCARBON FEED CONTAINING HYDROGEN AND HYDROCARBONS

(51) International classification :F25J 3/00
(31) Priority Document No :15/01.494
(32) Priority Date :15/07/2015
(33) Name of priority country :France
(86) International Application No :NA
Filing Date :NA
(87) International Publication No : NA
(61) Patent of Addition to Application Number :NA
Filing Date :NA
(62) Divisional to Application Number :NA
Filing Date :NA

(71)**Name of Applicant :**
1)IFP Energies nouvelles
Address of Applicant :1 et 4, avenue de Bois-Prau, F-92852 Rueil-Malmaison Cedex, France France
(72)**Name of Inventor :**
1)PAGOT, Alexandre

(57) Abstract :
The present invention concerns a process for the treatment of a hydrocarbon feed containing hydrogen and hydrocarbons including C1 to C4 hydrocarbons, comprising the following steps: separating the hydrocarbon feed into a gaseous phase (6) and a liquid phase (4) containing hydrocarbons; cooling the liquid phase (4) obtained from step a) to a temperature of 45°C or less using a cooling device (15); carrying out a first recontacting step on the cooled liquid phase (4) with the gaseous phase (6) in a counter-current column (16) in order to recover a first gaseous effluent (17) which is rich in hydrogen and a first liquid hydrocarbon effluent (18); in which, before the cooling step b), the liquid phase obtained from step a) is pre-cooled by exchange of heat in an exchanger (11) supplied with the first gaseous effluent and/or the first liquid hydrocarbon effluent obtained from step c). Figure 1.

No. of Pages : 19 No. of Claims : 13

(12) PATENT APPLICATION PUBLICATION
(19) INDIA
(22) Date of filing of Application :22/06/2016
(21) Application No.201644021413 A
(43) Publication Date : 20/01/2017

(54) Title of the invention : METHOD FOR MOBILE PHONE AND INSTRUMENT CONTROL AND SYSTEM USING THE METHOD

(51) International classification :H04M 1/00
(31) Priority Document No :201510412278.4
(32) Priority Date :14/07/2015
(33) Name of priority country :China
(86) International Application No :NA
Filing Date :NA
(87) International Publication No : NA
(61) Patent of Addition to Application Number :NA
Filing Date :NA
(62) Divisional to Application Number :NA
Filing Date :NA

(71)**Name of Applicant :**
1)INTEL CORPORATION
Address of Applicant :2200 Mission College Boulevard Santa Clara, California 95054 (US) U.S.A.
(72)**Name of Inventor :**
1)Haibo XU

(57) Abstract :
Embodiments of the invention propose a method for mobile phone and instrument control a system using the method. The method for mobile phone and instrument control is performed by a processing unit and comprises the following steps: reading one script; determining what a destination is according to the script; if the destination is a mobile phone, transmitting a first control command to the mobile phone according to the script; and if the destination is one of a plurality of instruments, transmitting a second control command to the instrument according to the script.

No. of Pages : 0 No. of Claims : 16

(12) PATENT APPLICATION PUBLICATION
(21) Application No.201644021414 A
(19) INDIA
(22) Date of filing of Application :22/06/2016
(43) Publication Date : 20/01/2017

(54) Title of the invention : PULSE DENSITY MODULATION VALUE CONVERTER AND APPLICATION THEREOF

(51) International classification :H03C 3/08
(31) Priority Document No :201510424522.9
(32) Priority Date :17/07/2015
(33) Name of priority country :China
(86) International Application No :NA
Filing Date :NA
(87) International Publication No : NA
(61) Patent of Addition to Application Number :NA
Filing Date :NA
(62) Divisional to Application Number :NA
Filing Date :NA

(71)**Name of Applicant :**
1)INTEL CORPORATION
Address of Applicant :2200 Mission College Boulevard Santa Clara, California 95054 (US) U.S.A.
(72)**Name of Inventor :**
1)Fanzhong, WU
2)Zhigang, LI
3)Jie, YAN

(57) Abstract :
Provided is a pulse density modulation value converter, comprising: a pulse density modulation reference point storage for storing a plurality of pulse density modulation reference points, each pulse density modulation reference point comprising a linear pulse density modulation value, an actual pulse density modulation value and/or an integral non-linear error value, wherein the integral non-linear error value is the difference between the actual pulse density modulation value and the linear pulse density modulation value; and a pulse density modulation value calculator for receiving a linear pulse density modulation value, searching the pulse density modulation reference point storage for a pair of pulse density modulation reference points closest to the linear pulse density modulation value, obtaining an actual pulse density modulation value corresponding to the linear pulse density modulation value through linear interpolation on the basis of the pair of pulse density modulation reference points, and outputting the actual pulse density modulation value.

No. of Pages : 0 No. of Claims : 25

(12) PATENT APPLICATION PUBLICATION
(19) INDIA
(22) Date of filing of Application :27/06/2016
(21) Application No.201644021938 A
(43) Publication Date : 20/01/2017

(54) Title of the invention : FLAT PANEL DEVICE AND METHOD FOR OPERATING THE FLAT PANEL DEVICE

(51) International classification :G06F 3/00
(31) Priority Document No :201510424755.9
(32) Priority Date :17/07/2015
(33) Name of priority country :China
(86) International Application No :NA
Filing Date :NA
(87) International Publication No : NA
(61) Patent of Addition to Application Number :NA
Filing Date :NA
(62) Divisional to Application Number :NA
Filing Date :NA

(71)**Name of Applicant :**
1)INTEL CORPORATION
Address of Applicant :2200 Mission College Boulevard Santa Clara, California 95054 (US) U.S.A.
(72)**Name of Inventor :**
1)Jinfeng, ZHOU
2)Zhichong, CHEN

(57) Abstract :
The present invention discloses a flat panel device and a method for operating a flat panel device. The flat panel device has a reset switch. The reset switch is used to disconnect a battery of the flat panel device from a load so as to force to turn off the flat panel device when a touch control panel of the flat panel device is disabled.

No. of Pages : 0 No. of Claims : 12

(12) PATENT APPLICATION PUBLICATION
(19) INDIA
(22) Date of filing of Application :29/06/2016
(21) Application No.201644022379 A
(43) Publication Date : 20/01/2017

(54) Title of the invention : CRANKCASE OIL CATCHER

(51) International classification :F01M 1/04
(31) Priority Document No :1512257.5
(32) Priority Date :14/07/2015
(33) Name of priority country :U.K.
(86) International Application No :NA
Filing Date :NA
(87) International Publication No : NA
(61) Patent of Addition to Application Number :NA
Filing Date :NA
(62) Divisional to Application Number :NA
Filing Date :NA

(71)**Name of Applicant :**
1)FORD GLOBAL TECHNOLOGIES, LLC
Address of Applicant :330 Town Center Drive, Suite 800, Dearborn, Michigan 48126. U.S.A.
(72)**Name of Inventor :**
1)PEGG, Ian Graham
2)STARK, Roland Paul

(57) Abstract :
A crankcase assembly for an engine comprising: a crankcase (2) comprising a crank sump (24); the crank sump comprising a primary sump volume (14a) and a secondary sump volume (14b); one or more crankcase oil catchers (100), the crankcase oil catchers comprising one or more surfaces (102, 104) configured to catch dispersed oil in the crankcase and direct the oil along the surfaces of the crankcase oil catcher away from a crankcase casing wall (18, 22) and towards the crank sump, wherein the crankcase oil catchers are provided above a crankshaft and below an associated piston of the engine; and one or more guides (40a, 40b) configured to collect oil captured by the crankcase oil catchers and guide the oil to the primary sump volume. [Fig 6]

No. of Pages : 24 No. of Claims : 22

(12) PATENT APPLICATION PUBLICATION
(21) Application No.201644022416 A
(19) INDIA
(22) Date of filing of Application :30/06/2016
(43) Publication Date : 20/01/2017

(54) Title of the invention : COMPOSITIONS AND METHODS OF ATTACHMENT OF THICK ENVIRONMENTAL BARRIER COATINGS ON CMC COMPONENTS •

(51) International classification :F01D 5/00
(31) Priority Document No :14/797,235
(32) Priority Date :13/07/2 15
(33) Name of priority country :U.S.A.
(86) International Application No :NA
Filing Date :NA
(87) International Publication No : NA
(61) Patent of Addition to Application Number :NA
Filing Date :NA
(62) Divisional to Application Number :NA
Filing Date :NA

(71)**Name of Applicant :**
1)GENERAL ELECTRIC COMPANY
Address of Applicant :1 River Road Schenectady, New York 12345 U.S.A.
(72)**Name of Inventor :**
1)KIRBY, Glen Harold
2)ANTOLINO, Nicholas Edward

(57) Abstract :
A coating system 20 on a CMC substrate 24 is provided, along with methods of its tape deposition onto a substrate 24. The coating system 20 can include a bond coat 26 on a surface of the CMC substrate 24; a first rare earth silicate coating 28a on the bond coat 26; a first sacrificial coating 30a of a first reinforced rare earth silicate matrix on the at least one rare earth silicate layer; a second rare earth silicate coating 28b on the sacrificial coating; a second sacrificial coating 30b of a second reinforced rare earth silicate matrix on the second rare earth silicate coating 28b; a third rare earth silicate coating 28c on the second sacrificial coating 30b; and an outer layer 32 on the third rare earth silicate coating 28c. The first sacrificial coating 30a and the second sacrificial coating 30b have, independently, a thickness of about 4 mils to about 40 mils. FIG. 2

No. of Pages : 21 No. of Claims : 15

(12) PATENT APPLICATION PUBLICATION
(19) INDIA
(22) Date of filing of Application :12/07/2016
(21) Application No.201644023755 A
(43) Publication Date : 20/01/2017

(54) Title of the invention : PROCESS FOR TREATING A HYDROCARBON FEED

(51) International classification :B01J 8/00
(31) Priority Document No :15/01.493
(32) Priority Date :15/07/2015
(33) Name of priority country :France
(86) International Application No :NA
Filing Date :NA
(87) International Publication No : NA
(61) Patent of Addition to Application Number :NA
Filing Date :NA
(62) Divisional to Application Number :NA
Filing Date :NA

(71)**Name of Applicant :**
1)IFP Energies nouvelles
Address of Applicant :1 et 4, avenue de Bois-Prau, F-92852 Rueil-Malmaison Cedex, France France
(72)**Name of Inventor :**
1)PAGOT, Alexandre

(57) Abstract :
The present invention concerns a process for the treatment of a hydrocarbon feed containing hydrogen and hydrocarbons including C1 to C4 hydrocarbons. The process employs two steps for recontacting gaseous and liquid phases and in which at least one of the recontacting steps is carried out in a column (30, 40) in which the gaseous and liquid streams are brought into counter-current contact.

No. of Pages : 19 No. of Claims : 8

(12) PATENT APPLICATION PUBLICATION
(21) Application No.201644023792 A
(19) INDIA
(22) Date of filing of Application :12/07/2016
(43) Publication Date : 20/01/2017

(54) Title of the invention : FASTENING OF A TIMEPIECE SPRING BY ADHESIVE BONDING

(51) International classification :F01P 11/00
(31) Priority Document No :15176978.3
(32) Priority Date :16/07/2015
(33) Name of priority country :EPO
(86) International Application No :NA
Filing Date :NA
(87) International Publication No : NA
(61) Patent of Addition to Application Number :NA
Filing Date :NA
(62) Divisional to Application Number :NA
Filing Date :NA

(71)**Name of Applicant :**
1)Nivarox-FAR S.A.
Address of Applicant :Avenue du College 10, CH-2400 Le Locle, Switzerland
(72)**Name of Inventor :**
1)STRANCZL, Marc
2)VERARDO, Marco

(57) Abstract :
Timepiece sub-assembly (100) including a balance spring stud (20) arranged to be fastened to a balance cock (40), and a balance spring (1) comprising an outer coil (2) and an end plate (10) of larger section than that of the outer coil (2), this stud (20) including a housing (21) arranged, in a first free state of the sub-assembly (100), to loosely contain the end plate (10) with tangential mobility with respect to the outer coil (2), and, in a second immobilised state of the sub-assembly (100), to immobilise the end plate (10) to which the housing (21) is joined by a layer (30) of adhesive covering a change-of-section shoulder (5) and which forms a mechanical seal for the balance spring (1) in a longitudinal direction (L) of the housing (21), and the end plate (10) includes an eye (6; 8) communicating with the layer (30) in the second immobilised state. Figure 9

No. of Pages : 15 No. of Claims : 16

(12) PATENT APPLICATION PUBLICATION
(19) INDIA
(22) Date of filing of Application :13/07/2016
(21) Application No.201644023973 A
(43) Publication Date : 20/01/2017

(54) Title of the invention : MECHANISM FOR SETTING THE RATE OF A TIMEPIECE OSCILLATOR

(51) International classification	:F24D 19/00
(31) Priority Document No	:15176957.7
(32) Priority Date	:16/07/2015
(33) Name of priority country	:EPO
(86) International Application No	:NA
Filing Date	:NA
(87) International Publication No	: NA
(61) Patent of Addition to Application Number	:NA
Filing Date	:NA
(62) Divisional to Application Number	:NA
Filing Date	:NA

(71)**Name of Applicant :**
1)The Swatch Group Research and Development Ltd.
Address of Applicant :Rue des Sors 3, CH-2074 Marin, Switzerland Switzerland
(72)**Name of Inventor :**
1)PARATTE, Lionel

(57) Abstract :
Microsystem (10) for setting the rate of a timepiece oscillator, comprising a wheel/inertia block (20) comprising an off-centre unbalance (22) and a toothing (21) and arranged to pivot with respect to a base plate (60) of the microsystem (10), which comprises an actuator driving a first active click (38) arranged to drive the toothing (21), and includes a means for stopping the toothing (21) in position, wherein the actuator is a thermomechanical actuator (30) arranged to convert a flow of light energy into a displacement of a distal end (380) of the thermomechanical actuator (30), which carries a first active click (38) or directly controls a movement of a first active click (38), and the microsystem (10) is capable of incorporation in a watch (1) comprising a crystal (2) transparent to predetermined wavelengths ranges and allowing the passage of a light ray (3) to regulate the microsystem (10). Figure 1

No. of Pages : 30 No. of Claims : 28

(12) PATENT APPLICATION PUBLICATION
(21) Application No.201644024098 A
(19) INDIA
(22) Date of filing of Application :14/07/2016
(43) Publication Date : 20/01/2017

(54) Title of the invention : ELECTRIC TURNOUT UNIT FOR AUTOMATIC CONVEYING APPARATUS

(51) International classification	:G01B 21/00	(71)**Name of Applicant :**
(31) Priority Document No	:10 2015 111 577.8	**1)EWAB International AG** Address of Applicant :Bahnhofstrasse 7, 6003 Luzern, Switzerland Switzerland
(32) Priority Date	:16/07/2015	(72)**Name of Inventor :**
(33) Name of priority country	:Germany	**1)ALMBERG, Patrik**
(86) International Application No	:NA	**2)LUNDIN, Roland**
Filing Date	:NA	**3)AXMAN, Anders**
(87) International Publication No	: NA	
(61) Patent of Addition to Application Number	:NA	
Filing Date	:NA	
(62) Divisional to Application Number	:NA	
Filing Date	:NA	

(57) Abstract :
An electric turnout unit (1) serves for determining and changing the conveying path of object holders being moved by and together with a conveying means (28) of a conveying apparatus (29). The electric turnout unit (1) includes a pivot angle definition element (15) being rotatably supported and one sensor (6) or a plurality of sensors (6) for determining a first pivot position (35) and a second pivot position (36) of the pivot angle definition element (15). The first pivot position (35) and the second pivot position (36) differ by a first pivot angle difference (37) being greater than zero. The pivot angle definition element (15) includes a first detection point (17) being associated with the first pivot position (35) and a second detection point (17) being associated with the second pivot position (36).

No. of Pages : 38 No. of Claims : 15

(12) PATENT APPLICATION PUBLICATION
(19) INDIA
(22) Date of filing of Application :28/12/2016
(21) Application No.201647044542 A
(43) Publication Date : 20/01/2017

(54) Title of the invention : PRESSURE LIMITING VALVE

(51) International classification	:F02M63/00,F02M55/02,F02M63/02
(31) Priority Document No	:1411598.4
(32) Priority Date	:30/06/2014
(33) Name of priority country	:U.K.
(86) International Application No	:PCT/EP2015/062772
Filing Date	:09/06/2015
(87) International Publication No	:WO 2016/000913
(61) Patent of Addition to Application Number	:NA
Filing Date	:NA
(62) Divisional to Application Number	:NA
Filing Date	:NA

(71)**Name of Applicant :**
1)DELPHI INTERNATIONAL OPERATIONS LUXEMBOURG S. R.L.
Address of Applicant :Avenue de Luxembourg, L-4940, Bascharage, Luxembourg Luxembourg
(72)**Name of Inventor :**
1)DONMEZ Mehmet
2)TRENADO Guillaume
3)TANSUG Onur Mehmet

(57) Abstract :
A high pressure container arrangement (16) is disclosed. It comprises the assembly of reservoir (22) and a pressure limiting valve (14). The reservoir (22) has an outer wall (20) an over pressure relief orifice (26) through which high pressure fluid may flow when the fluid pressure inside the reservoir (22) exceeds a predetermined pressure threshold. The valve (14) comprises a housing (30) in which is arranged a closing member (40) permanently biased by a spring (56) toward a closed position and when the pressure in the reservoir (22) exceeds the predetermined threshold the closing member (40) is pushed in an open position. The housing (30) of the valve (14) is integral to the wall (20) of the reservoir (22).

No. of Pages : 8 No. of Claims : 10

(12) PATENT APPLICATION PUBLICATION
(19) INDIA
(22) Date of filing of Application :28/12/2016
(21) Application No.201647044543 A
(43) Publication Date : 20/01/2017

(54) Title of the invention : REACTOR COMPRISING OUTLET COLLECTOR WITH INSPECTION PORT

(51) International classification :B01J3/02,B01J8/00,F16J13/02
(31) Priority Document No :14174940.8
(32) Priority Date :30/06/2014
(33) Name of priority country :EPO
(86) International Application No :PCT/EP2015/064398
Filing Date :25/06/2015
(87) International Publication No :WO 2016/001059
(61) Patent of Addition to Application Number :NA
Filing Date :NA
(62) Divisional to Application Number :NA
Filing Date :NA

(71)**Name of Applicant :**
1)HALDOR TOPS˜E A/S
Address of Applicant :Haldor Tops0es Alle 1, DK-2800 Kgs., Lyngby, Denmark Denmark
(72)**Name of Inventor :**
1)RISBJERG JARLKOV Klaus

(57) Abstract :
A reactor comprising an outlet collector with an inspection port for easy maintenance and service.

No. of Pages : 12 No. of Claims : 16

(12) PATENT APPLICATION PUBLICATION
(21) Application No.201647044544 A
(19) INDIA
(22) Date of filing of Application :28/12/2016
(43) Publication Date : 20/01/2017

(54) Title of the invention : MATRIX GENERATION DEVICE MATRIX GENERATION METHOD AND MATRIX GENERATION PROGRAM

(51) International classification :G09C1/00
(31) Priority Document No :NA
(32) Priority Date :NA
(33) Name of priority country :NA
(86) International Application No :PCT/JP2014/067609
Filing Date :02/07/2014
(87) International Publication No :WO 2016/002020
(61) Patent of Addition to Application Number :NA
Filing Date :NA
(62) Divisional to Application Number :NA
Filing Date :NA

(71)**Name of Applicant :**
1)MITSUBISHI ELECTRIC CORPORATION
Address of Applicant :7-3, Marunouchi 2-chome, Chiyoda-ku, Tokyo 100-8310 Japan. Japan
(72)**Name of Inventor :**
1)KAWAI Yutaka
2)SAKAI Yasuyuki

(57) Abstract :
This matrix generation device (100) is equipped with a tree structure generation unit (110) a root processing unit (120) and a node processing unit (130). The tree structure generation unit (110) generates a binary tree (T) representing a logical expression (F). The root processing unit (120) generates a matrix (M) in accordance with the type of element represented by the root of the binary tree (T) among the elements of the logical expression (F). The node processing unit (130) selects nodes other than the root of the binary tree (T) sequentially; performs an operation on the matrix (M) in accordance with the type of element represented by a node having a child node; and maps a variable as an element represented by a node having no child node to one row of the matrix (M). After selecting a node in the binary tree (T) the node processing unit (130) outputs the matrix (M) and a mapping (). The mapping () is information representing a variable mapped to each row of the matrix (M).

No. of Pages : 36 No. of Claims : 12

(12) PATENT APPLICATION PUBLICATION
(19) INDIA
(22) Date of filing of Application :29/12/2016
(21) Application No.201647044726 A
(43) Publication Date : 20/01/2017

(54) Title of the invention : GAIN CONTROL IN RADIO CHAINS OF A RECEIVER

(51) International classification :H04B 7/00
(31) Priority Document No :NA
(32) Priority Date :NA
(33) Name of priority country :NA
(86) International Application No :PCT/SE2014/050854
Filing Date :03/07/2014
(87) International Publication No :WO/2016/003341
(61) Patent of Addition to Application Number :NA
Filing Date :NA
(62) Divisional to Application Number :NA
Filing Date :NA

(71)**Name of Applicant :**
1)TELEFONAKTIEBOLAGET LM ERICSSON (PUBL)
Address of Applicant :S-164 83, Stockholm, Sweden
(72)**Name of Inventor :**
1)JOHANSSON, Bernt
2)THILLBERG, Jan-Erik

(57) Abstract :
There is provided automatic gain control of radio chains of a receiver. At least two radio frequency (RF) signals are received. Each RF signal is received on an individual radio chain from an antenna array. By comparing the at least two RF signals to a threshold it is determined whether to perform gain control or not of at least one of the at least two RF signals before analogue combining of the at least two RF signals. A notification is sent to a detector regarding whether gain control is performed or not. Analogue combining of the at least two RF signals is performed, thereby generating a single input to the detector.

No. of Pages : 31 No. of Claims : 23

(12) PATENT APPLICATION PUBLICATION
(19) INDIA
(22) Date of filing of Application :29/12/2016
(21) Application No.201647044727 A
(43) Publication Date : 20/01/2017

(54) Title of the invention : SURGE ARRESTER MODULE AND SURGE ARRESTER

(51) International classification :H01C 7/00
(31) Priority Document No :14171190.3
(32) Priority Date :04/06/2014
(33) Name of priority country :EPO
(86) International Application No :NA
Filing Date :NA
(87) International Publication No : NA
(61) Patent of Addition to Application Number :NA
Filing Date :NA
(62) Divisional to Application Number :NA
Filing Date :NA

(71)**Name of Applicant :**
1)ABB Schweiz AG
Address of Applicant :Brown Boveri Strasse 6, CH-5400 Baden, Switzerland Switzerland
(72)**Name of Inventor :**
1)JOHANSSON, Daniel

(57) Abstract :
A surge arrester module comprising: a first end electrode (and a second end electrode paced apart in the axial direction of the surge arrester module (1); a stack (4) of cylindrical elements (5) arranged between the first and second end electrodes (2, 3), at least one of these cylindrical elements (5) being a varistor block; andan outer casing (6) of electrically insulating material,

No. of Pages : 29 No. of Claims : 15

(12) PATENT APPLICATION PUBLICATION
(21) Application No.201647038241 A
(19) INDIA
(22) Date of filing of Application :09/11/2016
(43) Publication Date : 20/01/2017

(54) Title of the invention : FINGERPRINT INPUT INFORMATION PROCESSING METHOD SYSTEM AND MOBILE TERMINAL

(51) International classification :G06F21/32
(31) Priority Document No :201410534375.6
(32) Priority Date :11/10/2014
(33) Name of priority country :China
(86) International Application No :PCT/CN2015/073908
Filing Date :09/03/2015
(87) International Publication No :WO 2016/054890
(61) Patent of Addition to Application Number :NA
Filing Date :NA
(62) Divisional to Application Number :NA
Filing Date :NA

(71)**Name of Applicant :**
1)SHENZHEN HUIDING TECHNOLOGY CO., LTD.
Address of Applicant :Floor 13, Phase B, Tengfei Industrial Building, Futian Free Trade Zone, Shenzhen, Guangdong 518000, China China
(72)**Name of Inventor :**
1)HAO, Qiyi
2)HUNG, Chiu po

(57) Abstract :
A fingerprint input information processing method system and mobile terminal the method comprising the following steps: a fingerprint information identification step: when a fingerprint information input is detected by scanning identifying whether a fingerprint template matching input fingerprint information exists in a fingerprint database (S101); the fingerprint database comprises a plurality of pre registered fingerprint templates and each fingerprint template is associated with an application operation; an operation performing step: if the identification result is that the fingerprint template exists performing an application operation associated with the identified fingerprint template (S102). The method preregisters a plurality of fingerprints as fingerprint templates and sets an operation of an application associated with each fingerprint template such that the associated application operation can be started under a bright or dark screen thus providing a more convenient and rapid service to a user. Furthermore various kinds of application operations are all associated with specific fingerprint information thus ensuring privacy.

No. of Pages : 13 No. of Claims : 17

(12) PATENT APPLICATION PUBLICATION
(19) INDIA
(22) Date of filing of Application :09/11/2016
(21) Application No.201647038244 A
(43) Publication Date : 20/01/2017

(54) Title of the invention : METALLOPROTEASE FROM CHRYSEOBACTERIUM

(51) International classification :C12N9/52,C11D3/386
(31) Priority Document No :14164579.6
(32) Priority Date :14/04/2014
(33) Name of priority country :EPO
(86) International Application No :PCT/EP2015/058087
Filing Date :14/04/2015
(87) International Publication No :WO 2015/158723
(61) Patent of Addition to Application Number :NA
Filing Date :NA
(62) Divisional to Application Number :NA
Filing Date :NA

(71)**Name of Applicant :**
1)NOVOZYMES A/S
Address of Applicant :Krogshoejvej 36 DK 2880 Bagsvaerd Denmark
(72)**Name of Inventor :**
1)GJERMANSEN Morten
2)NYMAND GRARUP Soeren
3)OESTERGAARD Peter Rahbek
4)REISER Anna Verena
5)BJERRE Jeannette

(57) Abstract :
The present invention relates to a new metalloprotease and the use thereof in cleaning processes such as laundry and dish wash. The invention also relates to detergent compositions and cleaning compositions comprising a metalloprotease.

No. of Pages : 75 No. of Claims : 16

(12) PATENT APPLICATION PUBLICATION
(19) INDIA
(22) Date of filing of Application :09/11/2016
(21) Application No.201647038245 A
(43) Publication Date : 20/01/2017

(54) Title of the invention : METHOD FOR REDUCING THE DNA CONTENT OF A FERMENTATION BROTH

(51) International classification :C07K1/14,C12N15/10
(31) Priority Document No :14166721.2
(32) Priority Date :30/04/2014
(33) Name of priority country :EPO
(86) International Application No :PCT/EP2015/059497
Filing Date :30/04/2015
(87) International Publication No :WO 2015/166037
(61) Patent of Addition to Application Number :NA
Filing Date :NA
(62) Divisional to Application Number :NA
Filing Date :NA

(71)**Name of Applicant :**
1)NOVOZYMES A/S
Address of Applicant :Krogshoejvej 36 DK 2880 Bagsvaerd Denmark
(72)**Name of Inventor :**
1)HOBEL, Cedric
2)ANDERSEN, Heidi, Winterberg
3)PIND, Peter, Frode
4)KEPKA, Cecilia, Jansson

(57) Abstract :
A method for reducing the level of DNA in a fermentation broth is disclosed where the method includes a heating step where the broth is heated to a temperature of at least 70°C.

No. of Pages : 24 No. of Claims : 22

(12) PATENT APPLICATION PUBLICATION
(19) INDIA
(22) Date of filing of Application :12/06/2015
(21) Application No.2957/CHE/2015 A
(43) Publication Date : 20/01/2017

(54) Title of the invention : PROP STAND STOPPER STRUCTURE FOR A TWO WHEELED VEHICLE

(51) International classification	:B62H 1/00
(31) Priority Document No	:NA
(32) Priority Date	:NA
(33) Name of priority country	:NA
(86) International Application No	:NA
Filing Date	:NA
(87) International Publication No	: NA
(61) Patent of Addition to Application Number	:NA
Filing Date	:NA
(62) Divisional to Application Number	:NA
Filing Date	:NA

(71)**Name of Applicant :**
1)TVS MOTOR COMPANY LIMITED
Address of Applicant :JAYALAKSHMI ESTATES, NO.29, HADDOWS ROAD, CHENNAI - 600 006, Tamil Nadu India
(72)**Name of Inventor :**
1)JOGHEE THIRUMAL
2)ARUMUGAM AGATHIYAN
3)SHANMUGAM YUVARAJ
4)BHUSAM SYAMALA RAO
5)BALAGURU SRIDHAR

(57) Abstract :
The present subject matter described herein relates to a prop stand device (115) for a two-wheeled vehicle and a prop stand stopper structure (120) for said prop stand device (115). Whereas the prop stand device (115) is mounted to a side tube of the two-wheeled vehicle, the prop stand stopper structure (120) is disposed in the proximity of the prop stand device (115), and is mounted together with an axle (109a) of a toggle link member (109). The prop stand stopper structure (120) includes a stopper bracket (120) to a bottom portion of which a stopper cushion (120b) is detachably attached. The stopper cushion (120b) serves to absorb noise vibrations when said prop stand device (115) is moved to a retracted position.

No. of Pages : 16 No. of Claims : 10

(12) PATENT APPLICATION PUBLICATION
(21) Application No.3623/CHE/2015 A
(19) INDIA
(22) Date of filing of Application :15/07/2015
(43) Publication Date : 20/01/2017

(54) Title of the invention : PREPARATION OF RUXOLITINIB AND ITS INTERMEDIATES

(51) International classification :A61K 31/00
(31) Priority Document No :NA
(32) Priority Date :NA
(33) Name of priority country :NA
(86) International Application No :NA
Filing Date :NA
(87) International Publication No : NA
(61) Patent of Addition to Application Number :NA
Filing Date :NA
(62) Divisional to Application Number :NA
Filing Date :NA

(71)**Name of Applicant :**
1)Dr. Reddy™s Laboratories Limited
Address of Applicant :8-2-337, Road No. 3, Banjara Hills, Hyderabad-500 034, Telangana, India Telan ana India
(72)**Name of Inventor :**
1)Saikat Sen
2)Bhaskar Kandagatla
3)Eda Vishnu Vardhana Vema Reddy
4)Srinivas Oruganti
5)Poorna Chander Thatipalli
6)Rajani Rajan
7)Elati Ravi Ram Chandrashekar
8)Vilas Hareshwar Dahanukar

(57) Abstract :
The present invention relates to process for preparation of ruxolitinib intermediates and their use in preparation of Ruxolitinib of formula (I) and its pharmaceutically acceptable salts.

No. of Pages : 38 No. of Claims : 8

(12) PATENT APPLICATION PUBLICATION
(19) INDIA
(22) Date of filing of Application :15/07/2015
(21) Application No.3624/CHE/2015 A
(43) Publication Date : 20/01/2017

(54) Title of the invention : AN EMERGENCY NOTIFICATION SYSTEM IN A VEHICLE AND A METHOD THEREOF

(51) International classification :H04W
(31) Priority Document No :NA
(32) Priority Date :NA
(33) Name of priority country :NA
(86) International Application No :NA
Filing Date :NA
(87) International Publication No : NA
(61) Patent of Addition to Application Number :NA
Filing Date :NA
(62) Divisional to Application Number :NA
Filing Date :NA

(71)**Name of Applicant :**
1)Robert Bosch Engineering and Business Solutions Private Limited
Address of Applicant :123, Industrial Layout, Hosur Road, Koramangala, Bangalore 560095, Karnataka, INDIA Karnataka India
2)Robert Bosch GmbH
(72)**Name of Inventor :**
1)Veena KOODLI
2)Sangamesh VADAGAVE

(57) Abstract :
An emergency notification system 12 in a vehicle 10 is disclosed. The emergency notification system 12 comprises a vehicular control unit 14 adapted to detect an emergency and a portable communication device 18 connected to the vehicular control unit 14 via a communication means 15. The portable communication device 18 is configured to communicate the detected emergency, time of the emergency occurred and a geographical location of the portable communicated device 18 to at least one prestored contact 20. The portable communication device 18 further adapted to communicate an updated geographical location to at least one prestored contact 20 upon detecting a shift in the geographical location of the portable communication device 18. Reference figure: FIG. 1

No. of Pages : 15 No. of Claims : 10

(12) PATENT APPLICATION PUBLICATION
(21) Application No.1821/CHE/2015 A
(19) INDIA
(22) Date of filing of Application :07/04/2015
(43) Publication Date : 20/01/2017

(54) Title of the invention : A HOLDING STRUCTURE

(51) International classification	:H05B 33/00
(31) Priority Document No	:NA
(32) Priority Date	:NA
(33) Name of priority country	:NA
(86) International Application No	:NA
Filing Date	:NA
(87) International Publication No	: NA
(61) Patent of Addition to Application Number	:NA
Filing Date	:NA
(62) Divisional to Application Number	:NA
Filing Date	:NA

(71)**Name of Applicant :**
1)TVS MOTOR COMPANY LIMITED
Address of Applicant :JAYALAKSHM ESTATES • , NO.29 (OLD NO.8), HADDOWS ROAD, CHENNAI 600 006 Tamil Nadu India
(72)**Name of Inventor :**
1)PADNURU SRIPATHI AKSHAY
2)NATARAJAN SANKARANARAYANAN
3)VENKATA MANGARAJU KARANAM
4)MUNIAPPAN MUNIRAJ
5)MOHAN NATARAJAN

(57) Abstract :
ABSTRACT A HOLDING STRUCTURE The present subject matter relates to a holding structure (106) for holding an electronic or electrical component on to a vehicle body frame of a two-wheeled vehicle. The holding structure comprises of a plurality of end walls (201, 204, 205 and 206) defining a cavity (207) therebetween. The holding structure comprises of a bulged portion (301) capable of housing at least one slot (202), one or more edges disposed away from said bulged portion (301). One or more support portions are disposed in between the bulged portion (301) and the one or more edges . The one or more support portions provide sufficient stiffness and stability to the at least one slot (202) and the holding structure (106). <To be published with Fig. 3>

No. of Pages : 21 No. of Claims : 10

(12) PATENT APPLICATION PUBLICATION
(19) INDIA
(22) Date of filing of Application :13/07/2015
(21) Application No.3568/CHE/2015 A
(43) Publication Date : 20/01/2017

54) Title of the invention : METHOD OF FACILITATING A USER IN SELECTION OF ARTICLES IN A RETAIL ENVIRONMENT AND A SYSTEM THEREOF •

(51) International classification	:G06Q 30/00
(31) Priority Document No	: A
(32) Priority Date	:NA
(33) Name of priority country	:NA
(86) International Application No	:NA
Filing Date	:NA
(87) International Publication No	: NA
(61) Patent of Addition to Application Number	:NA
Filing Date	:NA
(62) Divisional to Application Number	:NA
Filing Date	:NA

(71)**Name of Applicant :**
1)MOONRAFT INNOVATION LABS PVT. LTD.
Address of Applicant :L-152, 14th Cross, 5th Main, HSR Layout, 6th Sector, Bangalore 560102. Karnataka India
(72)**Name of Inventor :**
1)Ankit Shekhawat
2)Kumar Rishi Anand
3)Vikas Johiya
4)Purva Sharma

(57) Abstract :
Disclosed herein is a method and system for facilitating a user in selection of articles in a retail environment. Information related to the articles is received from one or more first data sources. The user related information is retrieved from one or more second data sources. Further, an analysis report is generated based on information related to the articles anjavascript:WebForm_DoPostBackWithOptions(new WebForm_PostBackOptions(ctl00$ctl00$ContentPlaceHolder1$ContentPlaceHolder2$btnSave, , true, A, , false, true))d the user related information. Finally, the analysis report, having one or more recommendations, is provided to the user, thereby facilitating the user in selection of articles. The method disclosed hereinabove aims at minimizing the total time taken by the user in selecting and purchasing a particular article of interest to the user, since the one or more real-time recommendations are provided to the user. The method also prevents the user from purchasing articles that are out-of-fashion based on the current trends associated with the articles. FIG. 1A

No. of Pages : 32 No. of Claims : 14

(12) PATENT APPLICATION PUBLICATION
(19) INDIA
(22) Date of filing of Application :13/07/2015
(21) Application No.3569/CHE/2015 A
(43) Publication Date : 20/01/2017

(54) Title of the invention : STEERING SYSTEM OF A TRICYCLE

(51) International classification	:B62K 5/00
(31) Priority Document No	:NA
(32) Priority Date	:NA
(33) Name of priority country	:NA
(86) International Application No	:NA
Filing Date	:NA
(87) International Publication No	: NA
(61) Patent of Addition to Application Number	:NA
Filing Date	:NA
(62) Divisional to Application Number	:NA
Filing Date	:NA

(71)**Name of Applicant :**
1)MR.J.JUBIN ANTONY
Address of Applicant :PLOT NO-10, FIRST CROSS STREET IYYAPPA NAGAR MEDAVAKKAM, CHENNAI - 600 100, Tamil Nadu India
(72)**Name of Inventor :**
1)MR.J.JUBIN ANTONY
2)DR.A.JOSEPH ARUL PRAGASAM
3)MS.J.RENCY MARY

(57) Abstract :
ABSTRACT The present invention provides a suspension system for a tricycle having two front wheels, 355 wherein the suspension system is capable of tilting and turning simultaneously and even independently. The suspension system includes a pair of handles (2), a steering post (1), two sliders (8) & (9), four connector links (10) (11) (12) & (13), two base rods (6) & (7), a base frame (5), two wheel holders (14) & (15), a spring damper system (20) and a limiter system. Based on the angle of tilting and turning of the handle, the front pair of wheel is tilted and 360 turned respectively. The suspension system is designed in such a way that the handle remains vertical even when there is an imbalance between the left and right wheels with respect to a horizontal plane. It helps the handle to return to the vertical position after tilting and also aids in maintaining the vertical position of the handle to prevent unwanted tilting.

No. of Pages : 13 No. of Claims : 7

(12) PATENT APPLICATION PUBLICATION
(21) Application No.3653/CHE/2015 A
(19) INDIA
(22) Date of filing of Application :16/07/2015
(43) Publication Date : 20/01/2017

(54) Title of the invention : ONLINE COUPON AND VOUCHER MANAGEMENT METHOD

(51) International classification :G06Q
(31) Priority Document No :NA
(32) Priority Date :NA
(33) Name of priority country :NA
(86) International Application No :NA
Filing Date :NA
(87) International Publication No : NA
(61) Patent of Addition to Application Number :NA
Filing Date :NA
(62) Divisional to Application Number :NA
Filing Date :NA

(71)**Name of Applicant :**
1)MyCouchers
Address of Applicant :#109, 1st A main , Kasturinagar, Bangalore- 560043 Karnataka India
(72)**Name of Inventor :**
1)M Manu Chander
2)Santosh B Madyalkar

(57) Abstract :
The present invention provides a method for coupon aggregation, distribution and redeeming comprising the steps of generating a plurality of coupons and vouchers. The generated coupons and vouchers are virtual or electronic or physical in nature. The method further comprises selecting a distribution mode for the generated coupons and vouchers. The distribution mode comprises a distribution through a client channel and a direct channel. Further, a set of customers are targeted for coupon distribution in the direct channel mode. An information pertaining to the distributed coupons details are aggregated through the client channel as well as the direct channel. Further, the information is analysed on the basis of a plurality of marketing and visitation habit of the user. Based on the analysis of the information, a notification is send to the users for redeeming the saved coupons and vouchers.

No. of Pages : 28 No. of Claims : 6

(12) PATENT APPLICATION PUBLICATION
(19) INDIA
(22) Date of filing of Application :09/12/2016
(21) Application No.201647042087 A
(43) Publication Date : 20/01/2017

(54) Title of the invention : DEPOSIT SYSTEM AND METHOD

(51) International classification	:G06Q40/02,G06Q50/06,G06Q50/32
(31) Priority Document No	:PCT/ZA2014/003683
(32) Priority Date	:21/05/2014
(33) Name of priority country	:South Africa
(86) International Application No	:PCT/IB2015/053748
Filing Date	:21/05/2015
(87) International Publication No	:WO 2015/177754
(61) Patent of Addition to Application Number	:NA
Filing Date	:NA
(62) Divisional to Application Number	:NA
Filing Date	:NA

(71)**Name of Applicant :**
1)MOKUTU Emmanuel
Address of Applicant :Mokutu Emmanuel, 1046 Mapetla Moefi Street, Soweto, P.O Tshiawelo, Gauteng, South Africa 1818. South Africa
(72)**Name of Inventor :**
1)MOKUTU Emmanuel

(57) Abstract :
The invention relates to a deposit system and method and more particularly but not exclusively to a deposit system and method for banking and retrieving mobile phone airtime or data bundles or utilities such as gas water and/or electricity. The deposit system has a deposit institution having transceiver means for receiving a request for the deposit of a product or service from a user having an identifier and a storage means for storing the good or services or information relating to the goods or services corresponding to the identifier.

No. of Pages : 6 No. of Claims : 30

(12) PATENT APPLICATION PUBLICATION
(21) Application No.3558/CHE/2015 A
(19) INDIA
(22) Date of filing of Application :13/07/2015
(43) Publication Date : 20/01/2017

(54) Title of the invention : LOW NOX BIODIESEL ENGINE

(51) International classification :C10L 1/00
(31) Priority Document No :NA
(32) Priority Date :NA
(33) Name of priority country :NA
(86) International Application No :NA
Filing Date :NA
(87) International Publication No : NA
(61) Patent of Addition to Application Number :NA
Filing Date :NA
(62) Divisional to Application Number :NA
Filing Date :NA

(71)**Name of Applicant :**
1)S.LOGANATHAN
Address of Applicant :ASSOCIATE PROFESSOR, DEPARTMENT OF MECHANICAL ENGINEERING, AARUPADAI VEEDU INSTITUTE OF TECHNOLOGY, PAIYANOOR - 603 104, KANCHIPURAM (DT), Tamil Nadu India
(72)**Name of Inventor :**
1)S.LOGANATHAN

(57) Abstract :
TECHNOLOGY USING IN LOW NOx GDI ENGINE ABSTRACT The ever increasing demand for petroleum based fuels to use in automobiles and the uncertainty in their availability has been a matter of concern world over. The ever increasing import cost of fossil diesel is also a matter of concern for certain countries like India. The huge outflow of foreign exchange on one hand and increasing NOx emissions causing environmental pollution and health hazards on the other, have triggered interest in finding suitable low NOx alternatives to fossil fuel. The alternative fuel should be produced from resources available within the country. Though vegetable oils can be used as fuels for diesel engines, their high viscosities and low cetane number have led to the investigation of its various derivatives such as monoesters, known as bio diesel. It is derived from triglycerides (vegetable oil and animal fates) by transesterification process. It is biodegradable and renewable source in nature. Experiments have been conducted with methyl and ethyl esters of a number of vegetable oils as fuel in CIDI engines and acceptable performance over a short period of time in unmodified diesel engine (a type CIDI engine) has been reported. However, the NOx emission is found higher than diesel in the biodiesel applications.Although the miller cycle concept is well known from the 1950, and has found increasing power output, the potential for remarkable reductions of NOx emissions has strongly renewed the interest in applying the concept here. Internal exhaust gas recirculation (IEGR) is an emission control technology allowing significant NOxemission reductions from most types of diesel engines: from light-duty engines through mediumandheavy-duty engine applications.Internal EGR uses reduced or extended valve timingsto retain a certain fraction of exhaustfrom a preceding cycle.

No. of Pages : 5 No. of Claims : 9

(12) PATENT APPLICATION PUBLICATION
(19) INDIA
(22) Date of filing of Application :13/07/2015
(21) Application No.3559/CHE/2015 A
(43) Publication Date : 20/01/2017

(54) Title of the invention : PHARMACEUTICAL COMPOSITIONS COMPRISING ETORICOXIB AND PARACETAMOL

(51) International classification :A61K31/00
(31) Priority Document No :NA
(32) Priority Date :NA
(33) Name of priority country :NA
(86) International Application No :NA
Filing Date :NA
(87) International Publication No : NA
(61) Patent of Addition to Application Number :NA
Filing Date :NA
(62) Divisional to Application Number :NA
Filing Date :NA

(71)**Name of Applicant :**
1)HETERO RESEARCH FOUNDATION
Address of Applicant :HETERO DRUGS LIMITED, HETERO CORPORATE, 7-2-A2, INDUSTRIAL ESTATES, SANATH NAGAR, HYDERABAD - 500 082, Andhra Pradesh India
(72)**Name of Inventor :**
1)PARTHASARADHI REDDY, BANDI
2)KHADGAPATHI, PODILE
3)VENKATESWAR REDDY, POTHIREDDY

(57) Abstract :
The present invention relates to combination of etoricoxib and paracetamol. More specifically the present invention relates to pharmaceutical compositions comprising etoricoxib and paracetamol and process for preparing the same.

No. of Pages : 15 No. of Claims : 10

(12) PATENT APPLICATION PUBLICATION
(19) INDIA
(22) Date of filing of Application :16/07/2015
(21) Application No.3650/CHE/2015 A
(43) Publication Date : 20/01/2017

(54) Title of the invention : PALLADIUM NANOPARTICLE DECORATED GRAPHITIC CARBON NITRIDE AS ROOM TEMPERATURE HYDROGEN SENSOR

(51) International classification	:C01B 21/00
(31) Priority Document No	:NA
(32) Priority Date	:NA
(33) Name of priority country	:NA
(86) International Application No	:NA
Filing Date	:NA
(87) International Publication No	: NA
(61) Patent of Addition to Application Number	:NA
Filing Date	:NA
(62) Divisional to Application Number	:NA
Filing Date	:NA

(71)**Name of Applicant :**
1)Indian Institute of Technology, Madras
Address of Applicant :Indian Institute of Technology, Madras, Chennai 600036 Tamil Nadu India
(72)**Name of Inventor :**
1)Dr. RAMAPRABHU, Sundara
2)Ms. RAGHU, Sripada

(57) Abstract :
The disclosure relates to a method of synthesizing metal nanoparticle-decorated graphitic substrates for resistance-based room temperature hydrogen sensor. Graphitic carbon nitride (gC3N4) was prepared by thermal decomposition of melamine. Palladium nanoparticles were decorated on the gC3N4 by polyol reduction technique thereafter. The prepared palladium nanoparticle decorated graphitic carbon nitride film has a sensitivity change in resistivity greater than 500% for about 1 4% of hydrogen at a temperature of about 30°C to 80°C. The hydrogen sensor showed the highest sensitivity towards hydrogen at room temperature and does not require preheating before hydrogen sensing.

No. of Pages : 22 No. of Claims : 10

(12) PATENT APPLICATION PUBLICATION
(21) Application No.3595/CHE/2015 A
(19) INDIA
(22) Date of filing of Application :14/07/2015
(43) Publication Date : 20/01/2017

(54) Title of the invention : CONVERSION OF CIRCUMFERENTIAL FORCES IN ECCENTRIC RADIAL EXPANSION CYLINDERS INTO MECHANICAL ENERGY USING MULTI STAGE BOWS TYPE RECIPROCATOR

(51) International classification	:F02B 75/00
(31) Priority Document No	:NA
(32) Priority Date	:NA
(33) Name of priority country	:NA
(86) International Application No	:NA
Filing Date	:NA
(87) International Publication No	: NA
(61) Patent of Addition to Application Number	:NA
Filing Date	:NA
(62) Divisional to Application Number	:NA
Filing Date	:NA

(71)**Name of Applicant :**
1)P.L.AHOBALA NARASIMHAMURTHY
Address of Applicant :NO.12, CANARA BANK LAYOUT MAIN ROAD, VIRUPAKSHAPURA, VIDYARANYAPURA (POST), KODIGEHALLI, BANGALORE - 560 097, Karnataka India
(72)**Name of Inventor :**
1)P.L.AHOBALA NARASIMHAMURTHY

(57) Abstract :
TITLE OF INVENTION:- CONVERSION OF CIRCUMFERENTIAL FORCES IN ECCENTRIC RADIAL EXPANSION CYLINDERS INTO MECHANICAL ENERGY USING MULTI STAGE BOWS TYPE RECIPROCATOR. 1. Abstract The embodiment envisaged A a devise/machine to convert the hydraulic pressure into mechanical energy and vice versa. The circumferential force arising in the radial expansion of a cylinder is utilized to do useful work. The technique to build an eccentric radial expansion cylinder is explained. The technique to utilize the circumferential forces arising in radial expansion using a bow type reciprocator is explained.

No. of Pages : 8 No. of Claims : 7

(12) PATENT APPLICATION PUBLICATION
(21) Application No.3596/CHE/2015 A
(19) INDIA
(22) Date of filing of Application :14/07/2015
(43) Publication Date : 20/01/2017

(54) Title of the invention : REMOVABLE HANDLE FOR COOKWARE

(51) International classification	:A47J 45/00
(31) Priority Document No	:NA
(32) Priority Date	:NA
(33) Name of priority country	:NA
(86) International Application No	:NA
Filing Date	:NA
(87) International Publication No	: NA
(61) Patent of Addition to Application Number	:NA
Filing Date	:NA
(62) Divisional to Application Number	:NA
Filing Date	:NA

(71)**Name of Applicant :**
1)TTK PRESTIGE LIMITED
Address of Applicant :11TH FLOOR, BRIGADE TOWERS, NO.135, BRIGADE ROAD, BANGALORE - 560 025, Karnataka India
(72)**Name of Inventor :**
1)TIRUVALLUR THATAI JAGANNATHAN

(57) Abstract :
The invention relates to a cookware with detachable handle the said handle being capable of attached to different cook wares. The combination of wedge type coupling means, threaded fastening means with a sliding plate, a latch along with smooth lock means ensures reliable attachment mechanism

No. of Pages : 14 No. of Claims : 1

(12) PATENT APPLICATION PUBLICATION
(19) INDIA
(22) Date of filing of Application :17/07/2015
(21) Application No.3681/CHE/2015 A
(43) Publication Date : 20/01/2017

(54) Title of the invention : METHOD AND SYSTEM FOR MANAGING APPLICATIONS RUNNING ON SMART DEVICE USING A WEARABLE DEVICE •

(51) International classificati n :G06F
(31) Priority Document No :NA
(32) Priority Date :NA
(33) Name of priority country :NA
(86) International Application No :NA
Filing Date :NA
(87) International Publication No : NA
(61) Pa ent of Addition to Application Number :NA
Filing Date :NA
(62) Divisional to Application Number :NA
Filing Date :NA

(71)**Name of Applicant :**
1)SAMSUNG R&D INSTITUTE INDIA BANGALORE PRIVATE LIMITED
Address of Applicant :# 2870, ORION Building, Bagmane Constellation Business Park, Outer Ring Road, Doddanakundi Circle, Marathahalli Post, Bangalore -560037, Karnat ka, India Karnataka India
(72)**Name of Inventor :**
1)i) RAGHU, Nandan Satyanarayana
2)ii) AGARWAL, Sanjay Kumar
3)PAULRAJ, Karthik
4)VEERABHADRAIAH, Asha
5)v) ASOKAN, Mukunth

(57) Abstract :
ABSTRACT METHOD AND SYSTEM FOR MANAGING APPLICATIONS RUNNING ON SMART DEVICE USING A WEARABLE DEVICE The present invention describes method and system for managing applications running on one or more smart devices. The method comprises displaying a plurality of application icons on a wearable device, wherein each icon from the plurality of icons represents an active application on the smart device connected to the wearable device, receiving a touch gesture on one or more application icons from the plurality of icons, and triggering the smart device to perform an event comprising an interaction between the active applications represented by the one or more application icons in response to the touch gesture.. The system 100 comprises a wearable device and one or more smart devices. The wearable device comprises an application module, a SAP Gesture handler server, and accessory protocols. The smart device comprises an application handler daemon, a SAP gesture handler client, and accessory protocols. Figure 1 & 2

No. of Pages : 39 No. of Claims : 12

(12) PATENT APPLICATION PUBLICATION
(21) Application No.3682/CHE/2015 A
(19) INDIA
(22) Date of filing of Application :17/07/2015
(43) Publication Date : 20/01/2017

(54) Title of the invention : ENATIOPURE SYNTHESIS OF INDOLIZINOINDOLE ALKALOID (+) HARMICINE AND (-) HARMICINE FROM (2S,3R)-TETRAHYDRO-3-HYDROXY-5-OXO-2,3-FURANDICARBOXYLIC ACID (HIBISCUS ACID) AND (2S,3S)-TETRAHYDRO-3-HYDROXY-5-OXO-2,3-FURANDICARBOXYLIC ACID (GARCINIA ACID)

(51) International classification :A61K31/00
(31) Priority Document No :NA
(32) Priority Date :NA
(33) Name of priority country :NA
(86) International Application No :NA
Filing Date :NA
(87) International Publication No : NA
(61) Patent of Addition to Application Number :NA
Filing Date :NA
(62) Divisional to Application Number :NA
Filing Date :NA

(71)**Name of Applicant :**
1)INSTITUTE FOR INTENSIVE RESEARCH IN BASIC SCIENCES
Address of Applicant :MAHATMA GANDHI UNIVERSITY, P.D HILLS P.O, KOTTAYAM, Kerala India
(72)**Name of Inventor :**
1)IBRAHIM IBNUSAUD AND
2)SARATH MURALIDHARAN PILLAI

(57) Abstract :
This invention relates to a method for preparing antileishmania and antinociceptive property exhibiting enantiopure(+) or (-) Harmicine from(2S,3R)-Tetrahydro-3-hydroxy-5-oxo -2,3-furandicarboxylic acid (Hibiscus acid)and unnatural (-) harmicine(2) from (2S,3S)-Tetrahydro-3-hydroxy-5-oxo -2,3-furandicarboxylic acid(Garcinia acid)as a starting material of structure (1&2) using chiral pyrrolidinediones and its intermediates . (+) and (-) harmicine shows a strong antileishmanial activityl in enatiopure and racemic form and also exhibits a antinociceptive!, PDE5-inhibitory 18, antimalarial 19, antiviral20 and antitumor 21 activities. These aforementioned synthetic schemes are the total syntheses of (+) and (-)harmicine using a highly novel, direct ,non-linear and convergent synthetic strategy which involves the annealing alpha hydroxyl pyrrolidinedione bearing as key synthons to enantiomerically -pure (+) and (-)harmicine

No. of Pages : 29 No. of Claims : 9

(12) PATENT APPLICATION PUBLICATION
(21) Application No.201747000062 A
(19) INDIA
(22) Date of filing of Application :02/01/2017
(43) Publication Date : 20/01/2017

(54) Title of the invention : A DEVICE FOR MEASURING 3D SURFACE POTENTIAL DISTRIBUTION

(51) International classification	:G01R15/24,G01R19/00,G01R29/12
(31) Priority Document No	:NA
(32) Priority Date	:NA
(33) Name of priority country	:NA
(86) International Application No	:PCT/JP2014/003053
Filing Date	:06/06/2014
(87) International Publication No	:WO 2015/186160
(61) Patent of Addition to Application Number	:NA
Filing Date	:NA
(62) Divisional to Application Number	:NA
Filing Date	:NA

(71)**Name of Applicant :**
1)TOSHIBA MITSUBISHI ELECTRIC INDUSTRIAL SYSTEMS CORPORATION
Address of Applicant :3-1-1, Kyobashi, Chuo-ku, Tokyo 104-0031, Japan. Japan
2)THE UNIVERSITY OF TOKYO
(72)**Name of Inventor :**
1)FURUKAWA Masaaki
2)USHIWATA Kodai
3)YOSHIMITSU Tetsuo
4)TSUBOI Yuichi
5)HIDAKA Kunihiko
6)KUMADA Akiko
7)IKEDA Hisatoshi

(57) Abstract :
This device (70) for measuring 3D surface potential distribution includes a laser light source (13) a Pockels crystal (11) a mirror a light detector (16) a support structure (31) that supports the aforementioned elements whilst maintaining the mutual positional relationship therebetween a movement driver that can drive the 3D movement of the support structure (31) a rotary driver (35) that supports an object (8) for testing and can drive the rotation of the same with the longitudinal direction of the object (8) for testing as the axis and a drive controller (37) that controls the movement driver and the rotary driver (35). The drive controller (37) maintains the interval between an end surface of the Pockels crystal (11) and a surface of the object (8) for testing at a prescribed interval and coordinates the movement driving action of the movement driver on the support structure (31) and the rotation driving action of the rotary driver (35) on the object (8) for testing such that the end surface of the Pockels crystal (11) is in proximity to the entire surface of the potential relaxation system (3) of the object (8) for testing.

No. of Pages : 32 No. of Claims : 6

(12) PATENT APPLICATION PUBLICATION
(19) INDIA
(22) Date of filing of Application :02/01/2017
(21) Application No.201747000063 A
(43) Publication Date : 20/01/2017

(54) Title of the invention : BLOWER FOR HUMAN BODY

(51) International classification :A41D13/002,F25D1/00
(31) Priority Document No :2014159560
(32) Priority Date :05/08/2014
(33) Name of priority country :Japan
(86) International Application No :PCT/JP2015/071915
Filing Date :03/08/2015
(87) International Publication No :WO 2016/021528
(61) Patent of Addition to Application Number :NA
Filing Date :NA
(62) Divisional to Application Number :NA
Filing Date :NA

(71)**Name of Applicant :**
1)PROP CO. LTD.
Address of Applicant :9-16, Asakusabashi 1-chome, Taito-ku, Tokyo 111-0053,Japan. Japan
(72)**Name of Inventor :**
1)UCHIDA Mitsuya
2)TAMURA Toshiyo
3)YOSHIMURA Takumi
4)OHNO Yuko

(57) Abstract :
Provided is a blower for the human body that can blow air onto the human body inexpensively and stably. A blower (1) for the human body that blows air onto a human body (10) is provided with: a base member (100) positioned on the back of the human body (10); a fan (200) provided in the base member (100); and a left and right pair of air guide pipes (300) passing from an air outlet for the fan (200) over the shoulders of the human body to the sides of the neck and extending to the front of the human body. Discharge holes (301) for discharging air are formed in the air guide pipes (300).

No. of Pages : 24 No. of Claims : 7

(12) PATENT APPLICATION PUBLICATION
(21) Application No.3601/CHE/2015 A
(19) INDIA
(22) Date of filing of Application :14/07/2015
(43) Publication Date : 20/01/2017

(54) Title of the invention : A SCALABLE, LOW VARIATION AND EFFICIENT METHOD FOR PURIFICATION OF DIPHTHERIA TOXOID AND USES THEREOF

(51) International classification :A61K
(31) Priority Document No :NA
(32) Priority Date :NA
(33) Name of priority country :NA
(86) International Application No :NA
Filing Date :NA
(87) International Publication No : NA
(61) Patent of Addition to Application Number :NA
Filing Date :NA
(62) Divisional to Application Number :NA
Filing Date :NA

(71)**Name of Applicant :**
1)INDIAN IMMUNOLOGICALS LIMITED
Address of Applicant :Rakshapuram, Gachibowli, Hyderabad-500032, Telangana, India Telangana India
(72)**Name of Inventor :**
1)ANAND KUMAR, Kanakasapapathy
2)CHALAPATHI RAO, Akiri Surya Venkata
3)ELAIYARAJA, Manickam
4)MAITHAL, Kapil

(57) Abstract :
The present disclosure provides a scalable step-wise process for purification of diphtheria toxoid that is faster, and provides reduced process variability in toxoid retention.

No. of Pages : 17 No. of Claims : 5

(12) PATENT APPLICATION PUBLICATION
(21) Application No.3602/CHE/2015 A
(19) INDIA
(22) Date of filing of Application :14/07/2015
(43) Publication Date : 20/01/2017

(54) Title of the invention : A SCALABLE, LOW VARIATION AND EFFICIENT METHOD FOR PURIFICATION OF TETANUS TOXOID AND USES THEREOF

(51) International classification :A61K
(31) Priority Document No :NA
(32) Priority Date :NA
(33) Name of priority country :NA
(86) International Application No :NA
Filing Date :NA
(87) International Publication No : NA
(61) Patent of Addition to Application Number :NA
Filing Date :NA
(62) Divisional to Application Number :NA
Filing Date :NA

(71)**Name of Applicant :**
1)INDIAN IMMUNOLOGICALS LIMITED
Address of Applicant :Rakshapuram, Gachibowli, Hyderabad 500032, Telangana, India Telangana India
(72)**Name of Inventor :**
1)ANAND KUMAR, Kanakasapapathy
2)CHALAPATHI RAO, Akiri Surya Venkata
3)ELAIYARAJA, Manickam
4)MAITHAL, Kapil

(57) Abstract :
The present disclosure provides a scalable step-wise process for purification of tetanus toxoid that is faster, and provides reduced process variability in toxoid retention.

No. of Pages : 13 No. of Claims : 3

(12) PATENT APPLICATION PUBLICATION
(21) Application No.3691/CHE/2015 A
(19) INDIA
(22) Date of filing of Application :17/07/2015
(43) Publication Date : 20/01/2017

(54) Title of the invention : METHOD FOR PRODUCT SEARCH USING THE USER-WEIGHTED, ATTRIBUTE-BASED, SORT-ORDERING AND SYSTEM THEREOF

(51) International classification :G06F
(31) Priority Document No :NA
(32) Priority Date :NA
(33) Name of priority country :NA
(86) International Application No :NA
Filing Date :NA
(87) International Publication No : NA
(61) Patent of Addition to Application Number :NA
Filing Date :NA
(62) Divisional to Application Number :NA
Filing Date :NA

(71)**Name of Applicant :**
1)Giridhari Devanathan
Address of Applicant :1, Aarogya Gowri Nagar, Manapakkam Road, Mugalivakkam, Chennai Tamil Nadu India
(72)**Name of Inventor :**
1)Giridhari Devanathan
2)ShyamSunder Ramakrishnan
3)Devendra Singh Sachan

(57) Abstract :
A computer-implemented method for product search using the User-Weighted, Attribute-Based, Sort-Ordering comprising the steps of: computing of specification score for product attribute; computing of sentiment score for product attribute; characterized by steps of :- extracting reviews for each product from multiple sources; detecting the attributes described in each product review; detecting the polarity (positive/negative) of the user review with respect to each attribute converting the said attributes into a numerical score for each attribute which captures all the information about that attribute from user-ratings; computing an overall product score using the specifications score and sentiment score for individual product attributes; and displaying the search results sorted according to the overall product score.

No. of Pages : 32 No. of Claims : 30

(12) PATENT APPLICATION PUBLICATION
(21) Application No.201647039990 A
(19) INDIA
(22) Date of filing of Application :23/11/2016
(43) Publication Date : 20/01/2017

(54) Title of the invention : SWITCHED MODE POWER SUPPLY DRIVER INTEGRATED WITH A POWER TRANSMISSION ANTENNA

(51) International classification :H05B37/02,H05B33/08
(31) Priority Document No :PCT/CN2014/000445
(32) Priority Date :25/04/2014
(33) Name of priority country :China
(86) International Application No :PCT/EP2015/058489
Filing Date :20/04/2015
(87) International Publication No :WO 2015/162081
(61) Patent of Addition to Application Number :NA
Filing Date :NA
(62) Divisional to Application Number :NA
Filing Date :NA

(71)**Name of Applicant :**
1)PHILIPS LIGHTING HOLDING B.V.
Address of Applicant :High Tech Campus 45, NL-5656 AE, Eindhoven Netherlands
(72)**Name of Inventor :**
1)WANG, Gang
2)SHI, Liang
3)BEE, Ping Kian
4)FU, Jie
5)SUN, Xiao

(57) Abstract :
A driver comprising a switched mode power supply wherein said switched mode power supply comprises an existing coil the driver circuit further comprises: a first power transmission antenna (42) formed as a first coil which is either the existing coil of the switched mode power supply or coupled to the existing coil of the switched mode power supply said first power transmission antenna (42) is adapted for being magnetically coupled to a second power receiving antenna (44) thereby forming a wireless power transmitter.

No. of Pages : 21 No. of Claims : 15

(12) PATENT APPLICATION PUBLICATION
(19) INDIA
(22) Date of filing of Application :23/11/2016
(21) Application No.201647040054 A
(43) Publication Date : 20/01/2017

(54) Title of the invention : METHOD AND APPARATUS FOR ADJUSTABLE COUPLING FOR IMPROVED WIRELESS HIGH Q RESONANT POWER TRANSFER

(51) International classification :H02J5/00,B60L11/18,H01F38/14
(31) Priority Document No :14/330569
(32) Priority Date :14/07/2014
(33) Name of priority country :U.S.A.
(86) International Application No :PCT/US2015/033263
Filing Date :29/05/2015
(87) International Publication No :WO 2016/010636
(61) Patent of Addition to Application Number :NA
Filing Date :NA
(62) Divisional to Application Number :NA
Filing Date :NA

(71)**Name of Applicant :**
1)QUALCOMM INCORPORATED
Address of Applicant :ATTN: International IP Administration, 5775 Morehouse Drive, San Diego, California 92121-1714 U.S.A.
(72)**Name of Inventor :**
1)DAVIS, Roy Howard

(57) Abstract :
Methods and apparatuses for wireless inductive power transfer are described herein. One implementation may include an apparatus for wireless inductive power transfer. The apparatus comprises a primary resonator configured to wirelessly transfer power to a secondary resonator coupled to a load of a wireless power receiver. The apparatus comprises a coupling circuit configured to couple energy from a source power supply to the primary resonator. The apparatus comprises a controller configured to coordinate an adjustment of a first amount of coupling between the source power supply and the primary resonator via the coupling circuit with an adjustment of a second amount of coupling between the secondary resonator and the load of the wireless power receiver. The coupling circuit comprises a first coupling loop comprising a plurality of segments each configured to be selectively electrically connected to the source power supply the first coupling loop electrically isolated from the primary resonator.

No. of Pages : 41 No. of Claims : 42

(12) PATENT APPLICATION PUBLICATION
(19) INDIA
(22) Date of filing of Application :14/07/2015
(21) Application No.3589/CHE/2015 A
(43) Publication Date : 20/01/2017

(54) Title of the invention : A SCOOTER TYPE VEHICLE WITH A STORAGE UNIT

(51) International classification	:B62K 11/00
(31) Priority Document No	:NA
(32) Priority Date	:NA
(33) Name of priority country	:NA
(86) International Application No	:NA
Filing Date	:NA
(87) International Publication No	: NA
(61) Patent of Addition to Application Number	:NA
Filing Date	:NA
(62) Divisional to Application Number	:NA
Filing Date	:NA

(71)**Name of Applicant :**
1)TVS MOTOR COMPANY LIMITED
Address of Applicant :JAYALAKSHMI ESTATES, NO.29 (OLD NO.8) HADDOWS ROAD, CHENNAI - 600 006, Tamil Nadu India
(72)**Name of Inventor :**
1)AMIT DILIP RAJWADE
2)MAHESH PUTHIGE
3)NITHIN MADHAV
4)YOGESH CHANDRAKANT KOTNIS
5)KESHAVAPRASAD KESHAVA DATT
6)KURMAM SHANMUKHA PRADEEP

(57) Abstract :
ABSTRACT The present invention relates to a front portion of a scooter type motorcycle (1) with a swinging power unit (11). The scooter type motorcycle (1) includes a front covering . member (16), a rear covering member (20) located rearwardly of the front covering member (16), a storage member (30) connected to the rear covering member (20) to form a storage space (34). One or more protuberances (36) projecting forwardly from a surface of the storage member (30) is configured to hold one or more fastener receiving members (35). The storage member (30) is secured to the rear covering member (20) through one or more fasteners (39) passing through one or more recesses (24) of the rear covering member (20) along a longitudinal axis (XX) of said motorcycle (1) and is received in the one or more fastener receiving members (35).

No. of Pages : 9 No. of Claims : 10

(12) PATENT APPLICATION PUBLICATION
(21) Application No.3704/CHE/2015 A
(19) INDIA
(22) Date of filing of Application :19/07/2015
(43) Publication Date : 20/01/2017

(54) Title of the invention : A BLENDING SYSTEM CONTROLLED BY A MOBILE DEVICE

(51) International classification :B67D
(31) Priority Document No :NA
(32) Priority Date :NA
(33) Name of priority country :NA
(86) International Application No :NA
Filing Date :NA
(87) International Publication No : NA
(61) Patent of Addition to Application Number :NA
Filing Date :NA
(62) Divisional to Application Number :NA
Filing Date :NA

(71)**Name of Applicant :**
1)VTU extension Center, UTL Technologies Ltd.
Address of Applicant :VTU extension Center, UTL Technologies Ltd. #19/6, Ashokapuram School Road, Industrial Subarb, Yeshwanthpur, Bangalore-560022, Karnataka, India Telephone No. : +918023472171 Mobile No. : +917760280268 Fax:+918023572795 E-mail : siva.yellampalli@utltraining.com Karnataka India
(72)**Name of Inventor :**
1)SATYA SHANKARAIAH GODACHI
2)SIVA SANKAR YELLAMPALLI
3)PRADEEP KUMAR BASAVARAJAIAH BANAVARA

(57) Abstract :
A blending system (50) controlled by a mobile device (10) is disclosed. The blending system (50) comprises a control unit (30), wherein the mobile device (10) comprising a communicating means (12) to start or stop a communication with the control unit (30), a receiving means (14) to receive characteristics of the blending system (50) from the control unit (30); and a transmitting means (16) to transmit control commands to the control unit (30); and a controlling means (18) to control the characteristics of the blending system (50). The characteristics of the blending system are level of fluid characteristics of said blending system (50) are level in said storage vessel (32), level in said mixing vessel (34), level in said dispensing vessel (36), temperature of in said vessels (32,34,36); flow rate in said storage vessel (32), flow rate in said mixing vessel (34), flow rate in said dispensing vessel (36); blending speed of said mixing vessel (34) and, blending speed of said dispensing vessel (36)

No. of Pages : 21 No. of Claims : 8

(12) PATENT APPLICATION PUBLICATION
(21) Application No.3652/CHE/2015 A
(19) INDIA
(22) Date of filing of Application :16/07/2015
(43) Publication Date : 20/01/2017

(54) Title of the invention : VACCINE COMBINATIONS FOR PROPHYLAXIS AGAINST ARBOVIRAL INFECTIONS

(51) International classification	:A61K 39/00	(71)**Name of Applicant :**
(31) Priority Document No	:NA	**1)BHARAT BIOTECH INTERNATIONAL LIMITED**
(32) Priority Date	:NA	Address of Applicant :Genome Valley, Turkapally, Shameerpet, Hyderabad-500078, India Telangana India
(33) Name of priority country	:NA	(72)**Name of Inventor :**
(86) International Application No	:NA	**1)KANDASWAMY SUMATHY**
Filing Date	:NA	**2)KRISHNA MURTHY ELLA**
(87) International Publication No	: NA	
(61) Patent of Addition to Application Number	:NA	
Filing Date	:NA	
(62) Divisional to Application Number	:NA	
Filing Date	:NA	

(57) Abstract :
VACCINE COMPOSITIONS The present disclosure provides vaccine compositions for prophylaxis and treatment of Zika virus infections comprising Zika virus antigens in immunogenic compositions, and in combination of Zika antigens with one or more arbovirus antigens such as Chikungunya virus and Japanese encephalitis virus antigens, methods of preparation and production of such compositions for use as vaccines for eliciting immune response in mammals against the above mentioned pathogens.

No. of Pages : 102 No. of Claims : 69

(12) PATENT APPLICATION PUBLICATION
(21) Application No.3616/CHE/2015 A
(19) INDIA
(22) Date of filing of Application :15/07/2015
(43) Publication Date : 20/01/2017

(54) Title of the invention : STABLE PHARMACEUTICAL COMPOSITIONS OF MIRABEGRON

(51) International classification	:A61K 9/00
(31) Priority Document No	:NA
(32) Priority Date	:NA
(33) Name of priority country	:NA
(86) International Application No	:NA
Filing Date	:NA
(87) International Publication No	: NA
(61) Patent of Addition to Application Number	:NA
Filing Date	:NA
(62) Divisional to Application Number	:NA
Filing Date	:NA

(71)**Name of Applicant :**
1)LAURUS LABS PRIVATE LTD
Address of Applicant :DS-1, IKP Knowledge Park, Genome Valley, Turkapally, Shameerpet Mandal, Ranga Reddy District, Hyderabad - 500 078, Telangana Telangana India
(72)**Name of Inventor :**
1)SATYANARAYANA CHAVA
2)ANANDARUP DATTA
3)RAMAKRISHNA BV
4)CHINTAMANI PANDA

(57) Abstract :
ABSTRACT The present invention relates to process for preparing stable pharmaceutical composition of mirabegron and its salts. More specifically relates to process comprising mixing mirabegron and . its salt and at least one excipient other than polyethylene oxide and further processing the composition into desired formulation

No. of Pages : 11 No. of Claims : 8

(12) PATENT APPLICATION PUBLICATION
(21) Application No.3617/CHE/2015 A
(19) INDIA
(22) Date of filing of Application :15/07/2015
(43) Publication Date : 20/01/2017

(54) Title of the invention : OBSTACLE DETECTION AND EMERGENCY ALERT (ODEA) WALKING STICK FOR THE DISABLED

(51) International classification :H04W
(31) Priority Document No :NA
(32) Priority Date :NA
(33) Name of priority country :NA
(86) International Application No :NA
Filing Date :NA
(87) International Publication No : NA
(61) Patent of Addition to Application Number :NA
Filing Date :NA
(62) Divisional to Application Number :NA
Filing Date :NA

(71)**Name of Applicant :**
1)DR.G.SAKTHIVEL
Address of Applicant :5, VASUKI STREET, SECOND CROSS, ERODE - 638 001, Tamil Nadu India
2)JAYALEKSHMI.V.P
3)HEMANTH MITHUN PARVEEN
(72)**Name of Inventor :**
1)DR.G.SAKTHIVEL
2)JAYALEKSHMI.V.P
3)HEMANTH MITHUN PRAVEEN

(57) Abstract :
Day to day life is a challenge for the visually disable people. ODEA walking stick is a practical solution to the major problem that they face. Many technologies are developed for the same but most of them are not affordable to the common man. Hence an attempt is made to develop a low cost walking stick which meets the requirements of visually challenges people. The ODEA system uses the ultrasonic sensor modules to detect the obstacles. There are three ultrasonic sensor modules to sense the surroundings sideways, front, top and bottom. Based on the direction and proximity of the obstacle, audio messages are given to the user. These audio messages are.stored in an SD card and played through the speaker. If the obstacle is too near, then the user is physically alerted by activating the vibrator. An emergency button is also provided with the stick and if pressed sends an SMS to the number which is saved in the memory. This is achieved with the help of a GSM module interfaced with the ATmega8 microcontroller. With lesser complex design, it is easy to handle the stick which makes the user more comfortable and secure.

No. of Pages : 10 No. of Claims : 1

(12) PATENT APPLICATION PUBLICATION
(19) INDIA
(22) Date of filing of Application :15/07/2015
(21) Application No.3633/CHE/2015 A
(43) Publication Date : 20/01/2017

(54) Title of the invention : BACKUP DATA STORAGE

(51) International classification :G06F11/00
(31) Priority Document No :NA
(32) Priority Date :NA
(33) Name of priority country :NA
(86) International Application No :NA
Filing Date :NA
(87) International Publication No : NA
(61) Patent of Addition to Application Number :NA
Filing Date :NA
(62) Divisional to Application Number :NA
Filing Date :NA

(71)**Name of Applicant :**
1)HEWLETT-PACKARD DEVELOPMENT COMPANY, L.P.
Address of Applicant :11445 Compaq Center Drive West, Houston, Texas 77070, United States of America U.S.A.
(72)**Name of Inventor :**
1)H B , Girish
2)DIVAKAR , Pavan
3)S K, Sunish

(57) Abstract :
A method comprises receiving a data backup notification by a media server for creating backup of data associated with a client device in a target backup store. The data backup notification includes a store ID corresponding to the target backup store. Ascertain if the target backup store is a cloned backup store based on the store ID. The cloned backup store comprises a first backup store associated with a first backup storage device and a second backup store associated with a second backup storage device. If the target backup store is the cloned backup store, process a storage device priority list to identify a backup storage device associated with the cloned backup store. For the backup storage device being the first backup storage device, transmit a data backup request to the first backup storage device for saving backup data in the cloned backup store.

No. of Pages : 36 No. of Claims : 15

(12) PATENT APPLICATION PUBLICATION
(21) Application No.3634/CHE/2015 A
(19) INDIA
(22) Date of filing of Application :16/07/2015
(43) Publication Date : 20/01/2017

(54) Title of the invention : SUSTAINED-RELEASE NANO-PARTICLE PHARMACEUTICAL FORMULATION UTILIZING AZADIRACHTA INDICA FRUIT MUCILAGE AND CHITOSAN AS MATRIX FORMERS AND METHOD OF PRODUCTION THEREOF

(51) International classification	:A61K 9/00
(31) Priority Document No	:NA
(32) Priority Date	:NA
(33) Name of priority country	:NA
(86) International Application No	:NA
Filing Date	:NA
(87) International Publication No	: NA
(61) Patent of Addition to Application Number	:NA
Filing Date	:NA
(62) Divisional to Application Number	:NA
Filing Date	:NA

(71)**Name of Applicant :**
1)SRI RAMACHANDRA UNVIERSITY
Address of Applicant :No 1. RAMACHANDRA NAGAR, PORUR, CHENNAI, - 600116. Tamil Nadu India
(72)**Name of Inventor :**
1)HARIKA BALYA
2)SHANMUGANATHAN SEETHARAMAN
3)GOWTHAMARAJAN KUPPUSAMY
4)THYAGARAJAN SADRAS PANCHATCHARAM

(57) Abstract :
Applicant: SRI RAMACHANDRA UNVIERSITY Title: SUSTAINED-RELEASE NANO-PARTICLE PHARMACEUTICAL FORMULATION UTILIZING AZADIRACHTA INDICA FRUIT MUCILAGE AND CHITOSAN AS MATRIX FORMERS AND METHOD OF PRODUCTION THEREOF ABSTRACT The present invention relates to a novel biocompatible sustained-release nano-particle pharmaceutical formulation and method of preparation thereof. The formulation comprises of at least one therapeutic drug entrapped in a bio degradable antimicrobial activity exhibiting polymeric carrier to form a polymer nano-carrier system. The formulation is characterized in the bio degradable polymer comprising of chitosan as cationic polymer and polysaccharides extracted from Azadirachta indica fruit mucilage as an anionic polymer in which the therapeutic drug is complexed with the polymer thereby it retains the biological activity of the drug. The present invention also discloses the process of production of novel biocompatible sustained-release nano-particle pharmaceutical formulation by the modified coacervation method via the interactions between OH-groups of Azadirachta indica with COO- group of chitosan using different concentrations of polymeric solutions as carriers to prolong the drug release and thus bioavailability and therapeutic efficacy of the drug can be enhanced.

No. of Pages : 30 No. of Claims : 11

(12) PATENT APPLICATION PUBLICATION
(19) INDIA
(22) Date of filing of Application :16/07/2015
(21) Application No.3635/CHE/2015 A
(43) Publication Date : 20/01/2017

(54) Title of the invention : ARTICLES FOR HIGH TEMPERATURE SERVICE AND METHOD FOR MAKING

(51) International classification :C23C28/00
(31) Priority Document No :NA
(32) Priority Date :NA
(33) Name of priority country :NA
(86) International Application No :NA
Filing Date :NA
(87) International Publication No : NA
(61) Patent of Addition to Application Number :NA
Filing Date :NA
(62) Divisional to Application Number :NA
Filing Date :NA

(71)**Name of Applicant :**
1)General Electric Company
Address of Applicant :1 River Road, Schenectady, New York 12345, USA U.S.A.
(72)**Name of Inventor :**
1)CHATTERJEE, SHAHANA
2)NAYAK, MOHANDAS

(57) Abstract :
An article including a substrate and a coating system disposed on the substrate is presented. The coating system includes a thermal barrier coating disposed on the substrate; and a calcium-magnesium-aluminum-silicon-oxide (CMAS)-reactive material. The CMAS-reactive material has a nominal composition AB2O4, wherein A comprises an alkaline earth metal and B comprises a rare earth element. The CMAS-reactive material is present in the coating system in an effective amount to react with a CMAS composition at an operating temperature of the thermal barrier coating, thereby forming a reaction product having one or both of melting temperature and viscosity greater than that of the CMAS composition. Method of making some embodiments of the article and a related turbine engine component are also presented.

No. of Pages : 45 No. of Claims : 20

(12) PATENT APPLICATION PUBLICATION
(19) INDIA
(22) Date of filing of Application :11/11/2016
(21) Application No.201647038641 A
(43) Publication Date : 20/01/2017

(54) Title of the invention : CERTIFICATE ACQUISITION METHOD AND DEVICE

(51) International classification :H04L9/32
(31) Priority Document No :NA
(32) Priority Date :NA
(33) Name of priority country :NA
(86) International Application No :PCT/CN2014/077074
Filing Date :08/05/2014
(87) International Publication No :WO 2015/168913
(61) Patent of Addition to Application Number :NA
Filing Date :NA
(62) Divisional to Application Number :NA
Filing Date :NA

(71)**Name of Applicant :**
1)HUAWEI TECHNOLOGIES CO., LTD.,
Address of Applicant :Huawei Administration Building, Bantian, Longgang District, Shenzhen, Guangdong 518129 China
(72)**Name of Inventor :**
1)FENG Chengyan
2)WANG Jiangsheng

(57) Abstract :
Disclosed are a certificate acquisition method and device. A certificate application proxy message send by a new installed Virtualized Network Function Component (VNFC) instance is received; a certificate request message is sent to a certificate authority; a certificate issued by the certificate authority is acquired. Thus a new installed VNFC instance does not need to use the current certificate acquisition method for Virtualized Network Functions (VNFs). The problem caused by the certificate acquisition of a new installed VNFC instance of complicated process and increased complexity can be effectively avoided. Another VNFC instance already acquiring a certificate in the same network function virtualization infrastructure platform is used instead of a new installed VNFC instance to apply a certificate through the trusted channel established by the anther VNFC instance between the anther VNFC instance and the certificate authority and thereby not only the certificate can be acquired safely but the process can be effectively simplified the system response speed can be increased and the operating efficiency of the system can be improved.

No. of Pages : 47 No. of Claims : 57

(12) PATENT APPLICATION PUBLICATION
(19) INDIA
(22) Date of filing of Application :16/11/2016
(21) Application No.201647039111 A
(43) Publication Date : 20/01/2017

(54) Title of the invention : TORQUE CONTROL OF A VEHICLE POWERTRAIN BASED ON A TIME DERIVATIVE FOR A DYNAMIC TORQUE

(51) International classification :F02D41/14,F02D41/02,F02D41/10
(31) Priority Document No :14506554
(32) Priority Date :30/05/2014
(33) Name of priority country :Sweden
(86) International Application No :PCT/SE2015/050598
Filing Date :25/05/2015
(87) International Publication No :WO 2015/183160
(61) Patent of Addition to Application Number :NA
Filing Date :NA
(62) Divisional to Application Number :NA
Filing Date :NA

(71)**Name of Applicant :**
1)SCANIA CV AB
Address of Applicant :S-151 87 Sdertlje Sweden
(72)**Name of Inventor :**
1)REDBRANDT, Karl
2)EVALDSSON, Martin

(57) Abstract :
fwpres11fwpresAccording to the present invention a desired change of a time derivative of dynamic torque (Tq) which is provided to an output shaft from an engine in a vehicle from a current value to a new desired value is determined. A current rotational speed difference ( ) is determined between a first end of the powertrain in a vehicle rotating with a first rotational speed () and a second end of the powertrain rotating with a second rotational speed. The first rotational speed () is then controlled on the basis of the desired value of the time derivative for the dynamic torque (Tq) a spring constant (k) related to a torsional compliance in the powertrain and the determined current rotational speed difference {). Through control of the first rotational speed the current value for the time derivative for the dynamic torque is also indirectly controlled towards the desired value.

No. of Pages : 32 No. of Claims : 28

(12) PATENT APPLICATION PUBLICATION
(19) INDIA
(22) Date of filing of Application :16/11/2016
(21) Application No.201647039112 A
(43) Publication Date : 20/01/2017

(54) Title of the invention : RATE CONTROL FOR WIRELESS COMMUNICATION

(51) International classification :H04L1/00,H04L1/18,H04L1/04
(31) Priority Document No :62/020870
(32) Priority Date :03/07/2014
(33) Name of priority country :U.S.A.
(86) International Application No :PCT/US2015/035248
Filing Date :11/06/2015
(87) International Publication No :WO 2016/003617
(61) Patent of Addition to Application Number :NA
Filing Date :NA
(62) Divisional to Application Number :NA
Filing Date :NA

(71)**Name of Applicant :**
1)QUALCOMM INCORPORATED
Address of Applicant :ATTN: International IP Administration, 5775 Morehouse Drive, San Diego, California 92121-1714, USA U.S.A.
(72)**Name of Inventor :**
1)SORIAGA, Joseph Binamira
2)HE, Linhai
3)ATTAR, Rashid Ahmed Akbar

(57) Abstract :
Rate control is provided for communicating within a wireless communication network. In some examples redundant packet information transmitted over separate links each link having its own independent rate control loop can result in improvement in packet reliability with fast convergence to a desired error level. In other examples artificial degradation of a received data stream can be utilized to improve packet reliability also with fast convergence to the desired error level.

No. of Pages : 41 No. of Claims : 30

(12) PATENT APPLICATION PUBLICATION
(19) INDIA
(22) Date of filing of Application :16/12/2016

(21) Application No.201647042966 A
(43) Publication Date : 20/01/2017

(54) Title of the invention : CONTINUOUS COATING METHOD

(51) International classification :A23B4/10
(31) Priority Document No :NA
(32) Priority Date :NA
(33) Name of priority country :NA
(86) International Application No :PCT/US2014/039249
Filing Date :22/05/2014
(87) International Publication No :WO 2015/178922
(61) Patent of Addition to Application Number :NA
Filing Date :NA
(62) Divisional to Application Number :NA
Filing Date :NA

(71)**Name of Applicant :**
1)GENERAL MILLS, INC.
Address of Applicant :Number One General Mills Boulevard, P O Box 1113, Minneapolis, Minnesota 55440, USA U.S.A.
(72)**Name of Inventor :**
1)GREEN, Daniel, R.
2)SEVEROVA-EPP, Katia
3)JARL, Thomas, M.

(57) Abstract :
Disclosed are methods and systems for continuously coating food pieces. The methods include a steps of directing and uncoated food stream through an enrober to apply a first coating to at least a portion of a surface of each food piece to form a coated stream and continuously redirecting a portion of the coated stream back through the enrober along with the stream of uncoated food pieces to apply at least one additional coating to the portion of the coated stream.

No. of Pages : 15 No. of Claims : 26

(12) PATENT APPLICATION PUBLICATION
(21) Application No.3646/CHE/2015 A
(19) INDIA
(22) Date of filing of Application :16/07/2015
(43) Publication Date : 20/01/2017

(54) Title of the invention : USER-PLANE ENHANCEMENTS SUPPORTING IN-BEARER SUB-FLOW QOS DIFFERENTIATION

(51) International classification :H04W
(31) Priority Document No :NA
(32) Priority Date :NA
(33) Name of priority country :NA
(86) International Application No :NA
Filing Date :NA
(87) International Publication No : NA
(61) Patent of Addition to Application Number :NA
Filing Date :NA
(62) Divisional to Application Number :NA
Filing Date :NA

(71)**Name of Applicant :**
1)Nokia Technologies Oy
Address of Applicant :Karaportti 3, 02610 Espoo, Finland Finland
(72)**Name of Inventor :**
1)Vinh VAN PHAN
2)Ling YU
3)Samuli TURTINEN
4)Anand BEDEKAR
5)Amaanat ALI

(57) Abstract :
USER-PLANE ENHANCEMENTS SUPPORTING IN-BEARER SUB-FLOW QOS DIFFERENTIATION Embodiments concern managing traffic in a radio device. While classifying user-plane packets from multiple applications according to quality of service requirements, a specific user-plane packet is classified as/determined to be a predetermined special-type packet (e.g., the special-type packets establish a new TCP/IP connection for a newly activated application). Based on that, that specific user-plane packet is mapped to a pre-defined radio bearer associated with a preconfigured priority, for example a highest priority among all bearers to which any of these user-plane packets from the multiple applications are mapped. Then all the mapped user-plane packets are scheduled for transmission according to their respective priorities. For example, the specific user-plane packet could be a SDU having a SYN, SYN-ACK or ACK, and the network convergence sub-layer (NCS) constructs a L2 NCS PDU using a designated format with the SDU in the payload and context information in the header.

No. of Pages : 31 No. of Claims : 20

(12) PATENT APPLICATION PUBLICATION
(21) Application No.3647/CHE/2015 A
(19) INDIA
(22) Date of filing of Application :16/07/2015
(43) Publication Date : 20/01/2017

(54) Title of the invention : WEEDING AND BUND FORMING MACHINE

(51) International classification	:A01B 1/00
(31) Priority Document No	:NA
(32) Priority Date	:NA
(33) Name of priority country	:NA
(86) International Application No	:NA
Filing Date	:NA
(87) International Publication No	: NA
(61) Patent of Addition to Application Number	:NA
Filing Date	:NA
(62) Divisional to Application Number	:NA
Filing Date	:NA

(71)**Name of Applicant :**
1)C. KAMAL
Address of Applicant :#214, Athiyur Road, Chinnegoundan valsu, Kunnathur-638103, Tirpur Dist, Tamil Nadu, India. Tamil Nadu India
(72)**Name of Inventor :**
1)C. KAMAL

(57) Abstract :
TITLE: AN AGRICULTURAL IMPLEMENT FOR WEED REMOVAL AND BUND FORMING • ABSTRACT The present disclosure provides an agricultural implement (100) comprising a frame (103), a drive mechanism (105) which is connectable to the frame (103). The agricultural implement (100) further comprises at least one rotor assembly (106) extending from either sides of the drive mechanism (105). The at least one rotor assembly (106) comprises a rotor shaft (106a) connectable to the drive mechanism (105), the drive mechanism (105) is configured to rotate the rotor shaft (106a). The rotor assembly (106) also comprises a plurality of rotor blades (106b) mounted on the rotor shaft (106a), they are arranged helically to form an auger screw shape. The agricultural implement (100) of the present disclosure is configured to perform both weed removal and bund forming operations simultaneously, and thereby minimizes the cost and man power required for such operations. FIG. 1

No. of Pages : 24 No. of Claims : 13

(12) PATENT APPLICATION PUBLICATION
(21) Application No.3683/CHE/2015 A
(19) INDIA
(22) Date of filing of Application :17/07/2015
(43) Publication Date : 20/01/2017

(54) Title of the invention : MANAGING APPENDABLE STATE OF AN IMMUTABLE FILE

(51) International classification :G06F
(31) Priority Document No :NA
(32) Priority Date :NA
(33) Name of priority country :NA
(86) International Application No :NA
Filing Date :NA
(87) International Publication No : NA
(61) Patent of Addition to Application Number :NA
Filing Date :NA
(62) Divisional to Application Number :NA
Filing Date :NA

(71)**Name of Applicant :**
1)HEWLETT-PACKARD DEVELOPMENT COMPANY, L.P.
Address of Applicant :11445 Compaq Center Drive W., Houston, TX 77070, United States of America U.S.A.
(72)**Name of Inventor :**
1)RAJKUMAR KANNAN
2)RAMESH KANNAN KARUPPUSAMY
3)ARUN VISHNU P K

(57) Abstract :
Some examples described herein relate to managing appendable state of an immutable file. In an example, a request may be received to append an immutable file. A determination may be made whether the request is a first request to append immutable file. In response to determination that the request is the first request to append the immutable file, immutable file may be modified from an original state to an appendable state, wherein immutable file is appendable during the appendable state. A time period may be defined for immutable file to remain in the appendable state. A determination may be made whether immutable file is accessed during the time period. In response to determination that immutable file is not accessed during the time period, immutable file may be reverted from the appendable state to the original state upon expiration of the time period. [Figure 1] Some examples described herein relate to managing appendable state of an immutable file. In an example, a request may be received to append an immutable file. A determination may be made whether the request is a first request to append immutable file. In response to determination that the request is the first request to append the immutable file, immutable file may be modified from an original state to an appendable state, wherein immutable file is appendable during the appendable state. A time period may be defined for immutable file to remain in the appendable state. A determination may be made whether immutable file is accessed during the time period. In response to determination that immutable file is not accessed during the time period, immutable file may be reverted from the appendable state to the original state upon expiration of the time period. [Figure 1]

No. of Pages : 23 No. of Claims : 15

(12) PATENT APPLICATION PUBLICATION
(21) Application No.3648/CHE/2015 A
(19) INDIA
(22) Date of filing of Application :16/07/2015
(43) Publication Date : 20/01/2017

(54) Title of the invention : CMOS WIDEBAND RF AMPLIFIER WITH GAIN ROLL-OFFCOMPENSATION FOR EXTERNAL PARASITICS

(51) International classification :H03F
(31) Priority Document No :NA
(32) Priority Date :NA
(33) Name of priority country :NA
(86) International Application No :NA
Filing Date :NA
(87) International Publication No : NA
(61) Patent of Addition to Application Number :NA
Filing Date :NA
(62) Divisional to Application Number :NA
Filing Date :NA

(71)**Name of Applicant :**
1)Indian Institute of Science
Address of Applicant :C V Raman Road, Bangalore, Karnataka 560012, India. Karnataka India
(72)**Name of Inventor :**
1)BANERJEE, Gaurab
2)CHAKRABORTY, Arnab
3)CHAUHAN, Jaideep

(57) Abstract :
The present disclosure relates to an integrated wideband Radio Frequency (RF) amplifier, based on a complementary metal oxide semiconductor (CMOS) technology. In an embodiment the amplifier addresses the shortcomings of conventional wideband amplifiers and is based on a distributed amplifier (DA) topology which typically exhibit severe performance degradation when externally loaded with parasitic circuit elements. In an embodiment of the present invention a buffer amplifier at the output of a conventional DA is able to compensate the impact of parasitic elements. The disclosed circuit can be implemented by fabricating the wideband RF amplifier integrated circuit (IC) on a 130 nm CMOS technology or other comparable CMOS technologies.

No. of Pages : 24 No. of Claims : 10

(12) PATENT APPLICATION PUBLICATION
(19) INDIA
(22) Date of filing of Application :16/07/2015
(21) Application No.3649/CHE/2015 A
(43) Publication Date : 20/01/2017

(54) Title of the invention : MICROFLUIDIC ON-CHIP BIOSYNTHESIS OF NANOPARTICLES AT ROOM TEMPERATURE

(51) International classification :B01L
(31) Priority Document No :NA
(32) Priority Date :NA
(33) Name of priority country :NA
(86) International Application No :NA
Filing Date :NA
(87) International Publication No : NA
(61) Patent of Addition to Application Number :NA
Filing Date :NA
(62) Divisional to Application Number :NA
Filing Date :NA

(71)**Name of Applicant :**
1)Indian Institute of Science
Address of Applicant :C V Raman Road, Bangalore, Karnataka 560012, India. Karnataka India
(72)**Name of Inventor :**
1)GORTHI, Sai Siva
2)DANIEL, S.C.G. Kiruba
3)NIRUPA J, Lourdes Albina

(57) Abstract :
The present disclosure provides a microfluidic based portable hand held device for synthesizing metal nanoparticles that facilitates precise control over growth and size distribution of synthesized particles and also enables production of nanoparticles at room temperature without any assistance of stirring, ultrasonic or microwaves. The disclosed device includes a microfluidic chip, a vacuum based suction system to facilitate suction and flow of reactants through the microfluidic chip wherein flow rate of the reactants is controlled by dimensions of the microfluidic channels in the chip. The device further comprises a synthesized nanoparticle collection and storage unit that can be plugged and removed to facilitate reuse of the device without dismantling other units of the device for cleaning. The disclosure further provides a biosynthetic method of producing metal nanoparticles using plant extracts using the disclosed device at room temperature.

No. of Pages : 33 No. of Claims : 12

(12) PATENT APPLICATION PUBLICATION
(21) Application No.3574/CHE/2015 A
(19) INDIA
(22) Date of filing of Application :13/07/2015
(43) Publication Date : 20/01/2017

(54) Title of the invention : CARBON-SILICON CARBIDE COMPOSITES AND A METHOD FOR THEIR MANUFACTURE

(51) International classification :A61N
(31) Priority Document No :NA
(32) Priority Date :NA
(33) Name of priority country :NA
(86) International Application No :NA
Filing Date :NA
(87) International Publication No : NA
(61) Patent of Addition to Application Number :NA
Filing Date :NA
(62) Divisional to Application Number :NA
Filing Date :NA

(71)**Name of Applicant :**
1)Indian Space Research Organisation
Address of Applicant :Department of Space, Antariksh Bhavan, New BEL Road, Bangalore 560094, India Karnataka India
(72)**Name of Inventor :**
1)Thakur Sudesh Kumar Raunija
2)Sankaranarayana Babu
3)Sharad Chandra Sharma

(57) Abstract :
The present application relates to the field of carbon/silicon carbide (C/SiC) composites. In particular, the present application relates to C/SiC composites with tailorable density, high electrical conductivity, high strength and high machinability, and a method for their manufacture. The C/SiC composites of the present invention may be applied for fabrication of unipolar plates (UP) and bipolar plates (BP) which find application in high performance protein exchange membrane fuel cells (PEMF™C) used in automobiles, and spacecrafts.

No. of Pages : 24 No. of Claims : 17

(12) PATENT APPLICATION PUBLICATION
(19) INDIA
(22) Date of filing of Application :18/07/2015
(21) Application No.3757/CHE/2015 A
(43) Publication Date : 20/01/2017

(54) Title of the invention : METHOD, SYSTEM AND APPARATUS FOR INTERCONNECTING SELLERS ANDBUYERS

(51) International classification	:G06Q 30/00
(31) Priority Document No	:NA
(32) Priority Date	:NA
(33) Name of priority country	:NA
(86) International Application No	:NA
Filing Date	:NA
(87) International Publication No	: NA
(61) Patent of Addition to Application Number	:NA
Filing Date	:NA
(62) Divisional to Application Number	:NA
Filing Date	:NA

(71)**Name of Applicant :**
1)Nusecond Technologies Private Limited
Address of Applicant :No. 562/640, 3rd Floor, Janardhana Towers, Bilekahalli, Bannerghatta Main Road, Bangalore-560076, Karnataka, India. Karnataka India
(72)**Name of Inventor :**
1)Srinivas Surendra
2)Meera V Murthy
3)Kiran Kumar Nagaraj
4)Srivatsa G V

(57) Abstract :
ABSTRACT According to one aspect, a system for interconnecting set of first terminal devices and set of second terminal devices for engaging in sale and purchase transaction of a product comprises, a first profile collector which collects set of first profiles from a first terminal devices and attributing the first set of profiles to activity of purchase, a second profile collector which collects set of second profiles from a second terminal devices and attributing the second set of profile to activity of sale, an offer collector which collects first offer value and second offer value from the second terminal devices for the product, a strategy engine which determines first price from first offer value and determining a second price based on a number of transactions performed over a first time period and a deal engine which displays the first price against the product and also display the second price when first price is not selected.

No. of Pages : 44 No. of Claims : 10

(12) PATENT APPLICATION PUBLICATION
(19) INDIA
(22) Date of filing of Application :30/03/2016
(21) Application No.201644011028 A
(43) Publication Date : 20/01/2017

(54) Title of the invention : PROCESS AND DEVICE FOR SIMULTANEOUS LASER WELDING

(51) International classification :B23K 9/00
(31) Priority Document No :201510423267.6
(32) Priority Date :17/07/2015
(33) Name of priority country :China
(86) International Application No :NA
Filing Date :NA
(87) International Publication No : NA
(61) Patent of Addition to Application Number :NA
Filing Date :NA
(62) Divisional to Application Number :NA
Filing Date :NA

(71)**Name of Applicant :**
1)Shanghai Seeyao Electronics Co.,Ltd.
Address of Applicant :No.928, Zhaoxian Road, Jiading District, Shanghai, China China
(72)**Name of Inventor :**
1)GUO, Zhaoji
2)YANG, Xiaofeng
3)XIN, Guoxiang
4)HUANG, Hai
5)WANG, Yonghe

(57) Abstract :
This invention provides a process and device for simultaneous laser welding; after using the moving lower die and the fixing upper die to make the base and the lens attached, by using the light pipe, for example, transparent substances or other cheap materials, to make the laser, which is emitted from the laser source, emit through the lens to a welding region of the base after being processed, to operate rapid and average heating to the welding region; meanwhile, using the welding cylinder to press the base and the lens together, to make base and the lens pressed and welded together in molten state, and when welding, it does not generate powder or other defects, and, at the same time, it can make the height H and the width w of the generated waste selvage between [0, 0.4] mm, which can improve the performance of welding object more efficiently.

No. of Pages : 21 No. of Claims : 12

(12) PATENT APPLICATION PUBLICATION
(19) INDIA
(22) Date of filing of Application :17/11/2016
(21) Application No.201647039239 A
(43) Publication Date : 20/01/2017

(54) Title of the invention : STABLE COMPOSITIONS OF NEUROACTIVE PEPTIDES

(51) International classification :A61K38/00,A61P23/00
(31) Priority Document No :61/984216
(32) Priority Date :25/04/2014
(33) Name of priority country :U.S.A.
(86) International Application No :PCT/US2015/027745
Filing Date :27/04/2015
(87) International Publication No :WO 2015/164859
(61) Patent of Addition to Application Number :NA
Filing Date :NA
(62) Divisional to Application Number :NA
Filing Date :NA

(71)**Name of Applicant :**
1)NAUREX, INC.
Address of Applicant :Morris Corporate Center III, 400 Interpace Parkway, Parsippany, New Jersey 07054, USA U.S.A.
(72)**Name of Inventor :**
1)HOUCK, David, Renwick
2)ARGHAVANI, Mohsen

(57) Abstract :
The disclosure relates to intravenous formulations of GLYX peptides for treating CNS Disorders such as depression neuropathic pain or anxiety.

No. of Pages : 47 No. of Claims : 33

(12) PATENT APPLICATION PUBLICATION
(19) INDIA
(22) Date of filing of Application :16/07/2015
(21) Application No.3638/CHE/2015 A
(43) Publication Date : 20/01/2017

(54) Title of the invention : NOVEL CAFFEINE COCRYSTALS AND THEIR POLYMORPHIC FORMS

(51) International classification	:C07C 43/00
(31) Priority Document No	:NA
(32) Priority Date	:NA
(33) Name of priority country	:NA
(86) International Application No	:NA
Filing Date	:NA
(87) International Publication No	: NA
(61) Patent of Addition to Application Number	:NA
Filing Date	:NA
(62) Divisional to Application Number	:NA
Filing Date	:NA

(71)**Name of Applicant :**
1)LAURUS LABS PRIVATE LTD
Address of Applicant :LAURUS LABS PRIVATE LTD, 2ND FLOOR, SERENE CHAMBERS, ROAD #7, BANJARA HILLS, HYDERABAD - 500 034, Telangana India
(72)**Name of Inventor :**
1)SATYANARAYANA CHAVA
2)VAMSEE KRISHNA MUPPIDI
3)SEETA RAMA ANJANEYULU GORANTLA
4)SREENIVASA RAO DAMARLA

(57) Abstract :
ABSTRACT The present invention relates to novel cocrystals of caffeine and their polymorphic forms.

No. of Pages : 21 No. of Claims : 10

(12) PATENT APPLICATION PUBLICATION
(19) INDIA
(22) Date of filing of Application :13/07/2015
(21) Application No.3582/CHE/2015 A
(43) Publication Date : 20/01/2017

(54) Title of the invention : PRODUCTION OF SODIUM HYALURONATE BY FERMENTATION METHOD

(51) International classification :C12P
(31) Priority Document No :NA
(32) Priority Date :NA
(33) Name of priority country :NA
(86) International Application No :NA
Filing Date :NA
(87) International Publication No : NA
(61) Patent of Addition to Application Number :NA
Filing Date :NA
(62) Divisional to Application Number :NA
Filing Date :NA

(71)**Name of Applicant :**
1)STELIS BIOPHARMA
Address of Applicant :#293, Bommasandra- Jigani Link road, Jigani Industrial Area, Anekal Taluk, Bangalore-5600105, Karnataka, India. Karnataka India
(72)**Name of Inventor :**
1)VARA, Sanjeev Kumar
2)DURGAPRASAD, Annavajjula

(57) Abstract :
The present invention discloses a process for producing high molecular weight sodium hyaluronate by bacterial fermentation. In particular, the present invention relates to a fermentation process for producing high molecular weight sodium hyaluronate by culturing Streptococcus equi subsp. zooepidemicus ATCC 35246 which is free of hyaluronidase activity

No. of Pages : 22 No. of Claims : 16

(12) PATENT APPLICATION PUBLICATION
(19) INDIA
(22) Date of filing of Application :13/07/2015
(21) Application No.3583/CHE/2015 A
(43) Publication Date : 20/01/2017

(54) Title of the invention : FREEZING OF HIGH CELL DENSITY PERIPHERAL BLOOD MONONUCLEAR CELLS

(51) International classification	:A01N 1/00
(31) Priority Document No	:NA
(32) Priority Date	:NA
(33) Name of priority country	:NA
(86) International Application No	:NA
Filing Date	:NA
(87) International Publication No	: NA
(61) Patent of Addition to Application Number	:NA
Filing Date	:NA
(62) Divisional to Application Number	:NA
Filing Date	:NA

(71)**Name of Applicant :**
1)Dr. Reddy™s Laboratories Limited
Address of Applicant :8-2-337, Road No. 3, Banjara Hills, Hyderabad, Telangana, India-500034 Telangana India
(72)**Name of Inventor :**
1)Gaurav Rajendraprasad Mehta
2)Manish Kumar
3)Sridevi Khambhampaty

(57) Abstract :
The present invention is related to a method for cryopreservation of high cell density PBMC by employing composition of cryoprotectants such as a polyol and polysaccharide. The said composition results in source effector cells that retain their functional activity during cryopreservation and revival. The said cells are further used in ADCC functional assay.

No. of Pages : 18 No. of Claims : 7

(12) PATENT APPLICATION PUBLICATION
(21) Application No.3584/CHE/2015 A
(19) INDIA
(22) Date of filing of Application :14/07/2015
(43) Publication Date : 20/01/2017

(54) Title of the invention : A STABLE ANGLE ROTARY INCLINED DISC MOUNTED ROBOTIC ARM FOR GUIDED BADMINTON PLAYING

(51) International classification	:C12P	(71)**Name of Applicant :**
(31) Priority Document No	:NA	**1)ANUPAM KAR**
(32) Priority Date	:NA	Address of Applicant :S/O AMRIT KUMAR KAR,
(33) Name of priority country	:NA	JOGENDRANAGAR, AGARTHALA, WEST TRIPURA, PIN-
(86) International Application No	:NA	799004, INDIA Tamil Nadu India
Filing Date	:NA	**2)MOINAK BANERJEE**
(87) International Publication No	: NA	**3)SOUMYA PRAMANIK**
(61) Patent of Addition to Application Number	:NA	(72)**Name of Inventor :**
Filing Date	:NA	**1)ANUPAM KAR**
(62) Divisional to Application Number	:NA	**2)MOINAK BANERJEE**
Filing Date	:NA	**3)SOUMYA PRAMANIK**

(57) Abstract :
The present invention comprises a stable angle rotary inclined disc mounted robotic arm for guided badminton playing uses a mechanically stabilized rotatory inclined disk maintained at an optimum angle that allows a badminton racquet, installed on it, and operated with a servo motor, to be aligned such that a desired trajectory is obtained for every hit at the shuttlecock for every angular alignment of the disk as well as spatial configuration of the robotic arm. The combination of the disk mounted on the robotic arm as well as the motor driving it is maintained at an optimum angle at all configurations of the robotic arm. This is achieved with the help of a crossed belt drive mechanism driven by the rotatory motion of the motor which is responsible for the elbow motion of the robotic arm.

No. of Pages : 18 No. of Claims : 10

(12) PATENT APPLICATION PUBLICATION
(21) Application No.3585/CHE/2015 A
(19) INDIA
(22) Date of filing of Application :14/07/2015
(43) Publication Date : 20/01/2017

(54) Title of the invention : AUTOMATIC ELECTRONIC VALVE TO CONTROL WATER OUT FLOW ALONG WITH EXISTING WATER LEVEL CONTROLLER

(51) International classification	:A01M 29/00
(31) Priority Document No	:NA
(32) Priority Date	:NA
(33) Name of priority country	:NA
(86) International Application No	:NA
Filing Date	:NA
(87) International Publication No	: NA
(61) Patent of Addition to Application Number	:NA
Filing Date	:NA
(62) Divisional to Application Number	:NA
Filing Date	:NA

(71)**Name of Applicant :**
1)NITTE MEENAKSHI INSTITUTE OF TECHNOLOGY
Address of Applicant :GOVINDAPURA GOLLAHALLY, YELAHANKA, BANGALORE - 560 064, Karnataka India
(72)**Name of Inventor :**
1)DR.SREENIVASAPPA B.V.
2)PROF. N.MAHAVIRASWAMY

(57) Abstract :
Abstract Water being scares commodity Water being scares commodity ipplicafions the existing automatic water level controller will only control the inflow of water into the overhead tank. Towards the above objective in addition to the existing water level controller an automatic electronic valve to control the out flow of water from the overhead tank without the knowledge of inmates of the house is designed. This is the novelty of the invention. Care is taken to see that wastage of water is minimized. The invention is made economically viable by using highly reliable components and relatively less complex circuitry. Outflow of water from the overhead tank is permitted only during predefined time interval beyond which the mechanism provided automatically closes the flow of water. Thus preventing the wastage of water.

No. of Pages : 6 No. of Claims : 6

(12) PATENT APPLICATION PUBLICATION
(19) INDIA
(22) Date of filing of Application :13/07/2015
(21) Application No.3577/CHE/2015 A
(43) Publication Date : 20/01/2017

(54) Title of the invention : SYSTEM FOR ENABLING ENTITIES TO COMPLY WITH LAWS GOVERNING THEM

(51) International classification :G06Q
(31) Priority Document No :NA
(32) Priority Date :NA
(33) Name of priority country :NA
(86) International Application No :NA
Filing Date :NA
(87) International Publication No : NA
(61) Patent of Addition to Application Number :NA
Filing Date :NA
(62) Divisional to Application Number :NA
Filing Date :NA

(71)**Name of Applicant :**
1)D™SOUZA Anil Prem
Address of Applicant :Palmyra, 4 BC, 330, OMBR Layout, Banaswadi, Bangalore Karnataka India
(72)**Name of Inventor :**
1)D™SOUZA Anil Prem
2)SHARMA Hansa
3)RAJU ESHWARA Subramanya
4)DAMODARAN Madhu

(57) Abstract :
System and method for enabling entities to comply with laws governing them are provided. The system (100) includes a database (102) and a logic controller (104). The database (102) may be configured to store information corresponding to a list of tasks derived from a plurality of laws and a set of rules based on which each of the tasks from the list of tasks is assignable for performance. The logic controller (104) may be configured to receive information corresponding to an entity. The logic controller (104) may further verify whether one or more tasks are assignable to the entity based on the received information and the set of rules. Furthermore, the logic controller (104) may be configured to assign those tasks that are identified based on the verification, to an entity. Reference figure: FIG. 3

No. of Pages : 33 No. of Claims : 15

(12) PATENT APPLICATION PUBLICATION
(19) INDIA
(22) Date of filing of Application :13/07/2015
(21) Application No.3578/CHE/2015 A
(43) Publication Date : 20/01/2017

(54) Title of the invention : A COMPACT RETROFIT AXLE LIFTING MECHANISM

(51) International classification :B60G
(31) Priority Document No :NA
(32) Priority Date :NA
(33) Name of priority country :NA
(86) International Application No :NA
Filing Date :NA
(87) International Publication No : NA
(61) Patent of Addition to Application Number :NA
Filing Date :NA
(62) Divisional to Application Number :NA
Filing Date :NA

(71)**Name of Applicant :**
1)ASHOK LEYLAND LIMITED
Address of Applicant :of No. 1, Sardar Patel Road, Guindy, Chennai 600 032, India Tamil Nadu India
(72)**Name of Inventor :**
1)A. Sahaya Grinspan
2)Agrawal Jitesh
3)S. Parthiban
4)Sathya Prasad Mangalaramanan

(57) Abstract :
The present invention relates to a simple retrofit-able axle lift mechanism for front second axle of a multi-axle vehicle. A compact pneumatically operated system (18) to lift and descend the axle of a multi-axle vehicle mounted on a suspension of a multi-axle vehicle, said system comprises, a movable top base (20) connected to a bottom base (21) through at least two guide channels (23A); a pair of U-bolt assemblies (24,24A) operably attached to said movable top base (20) and an axle beam; an inflatable resilient means (22) disposed between said movable top base (20) and said bottom base (21);wherein during un-laden condition said resilient means is inflated to lift said movable top base (20) and said axle beam; said resilient means (22)is deflated during laden condition to descend said movable top base (20) and said axle beam. FIG. 6

No. of Pages : 29 No. of Claims : 9

(12) PATENT APPLICATION PUBLICATION
(19) INDIA
(22) Date of filing of Application :15/07/2015
(21) Application No.3626/CHE/2015 A
(43) Publication Date : 20/01/2017

(54) Title of the invention : METHOD FOR AUTOMATIC QUESTION GENERATION AND A HIERARCHICAL QUESTIONING SYSTEM

(51) International classification	:G06F 17/00
(31) Priority Document No	:NA
(32) Priority Date	:NA
(33) Name of priority country	:NA
(86) International Application No	:NA
Filing Date	:NA
(87) International Publication No	: NA
(61) Patent of Addition to Application Number	:NA
Filing Date	:NA
(62) Divisional to Application Number	:NA
Filing Date	:NA

(71)**Name of Applicant :**
1)Samsung R & D Institute India- Bangalore Private Limited
Address of Applicant :# 2870, Orion Building, Bagmane Constellation Business Park, Outer Ring Road, Doddanekundi Circle, Marathahalli Post, Bangalore-560037 Karnataka India
(72)**Name of Inventor :**
1)Abhishek Gupta
2)Bhuvaneswari Ramasamy
3)Mohan Sundar B

(57) Abstract :
ABSTRACT Embodiments herein provide a method of providing a question generation system. The method includes extracting content present in at least one data source, in order to associate the content with attributes. The method includes classifying the content associated with attributes to a category and a sub-category, based on a set of rules. The method includes generating at least one question based on the classified content. FIG. 1

No. of Pages : 46 No. of Claims : 11

(12) PATENT APPLICATION PUBLICATION
(19) INDIA
(22) Date of filing of Application :18/07/2015
(21) Application No.3695/CHE/2015 A
(43) Publication Date : 20/01/2017

(54) Title of the invention : ARTICLES FOR HIGH TEMPERATURE SERVICE AND METHOD FOR MAKING

(51) International classification :C23C
(31) Priority Document No :NA
(32) Priority Date :NA
(33) Name of priority country :NA
(86) International Application No :NA
Filing Date :NA
(87) International Publication No : NA
(61) Patent of Addition to Application Number :NA
Filing Date :NA
(62) Divisional to Application Number :NA
Filing Date :NA

(71)**Name of Applicant :**
1)General Electric Company
Address of Applicant :1 River Road, Schenectady, New York 12345, USA U.S.A.
(72)**Name of Inventor :**
1)CHATTERJEE, SHAHANA
2)NAYAK, MOHANDAS

(57) Abstract :
An article including a substrate and a coating system disposed on the substrate is presented. The coating system includes a thermal barrier coating disposed on the substrate; and a calcium-magnesium-aluminum-silicon-oxide (CMAS)-reactive material. The CMAS-reactive material is present in the coating system in an effective amount to react with a CMAS composition at an operating temperature of the thermal barrier coating, thereby forming a reaction product having one or both of melting temperature and viscosity greater than that of the CMAS composition. The CMAS-reactive material has a nominal composition of AB4-xDxO7, wherein A includes strontium, calcium, or a combination thereof, B includes a rare earth element, D includes aluminum, gallium, or a combination thereof, and x is a number less than or equal to 2. Method of making some embodiments of the article and a related turbine engine component are also presented.

No. of Pages : 46 No. of Claims : 20

(12) PATENT APPLICATION PUBLICATION
(21) Application No.3696/CHE/2015 A
(19) INDIA
(22) Date of filing of Application :18/07/2015
(43) Publication Date : 20/01/2017

(54) Title of the invention : OPTICAL NANOSENSOR FOR EARLY STAGE DETECTION OF BACTOCERA OLEAE INFESTATION

(51) International classification :A01N
(31) Priority Document No :NA
(32) Priority Date :NA
(33) Name of priority country :NA
(86) International Application No :NA
Filing Date :NA
(87) International Publication No : NA
(61) Patent of Addition to Application Number :NA
Filing Date :NA
(62) Divisional to Application Number :NA
Filing Date :NA

(71)**Name of Applicant :**
1)Indian Institute Of Science
Address of Applicant :C. V. Raman Avenue, Bangalore-560012, Karnataka. India. Karnataka India
(72)**Name of Inventor :**
1)Prof. Santanu Bhattacharya
2)Prof. Rudra Pratap
3)Mr. Parikshit Moitra
4)Dr. Deepa Bhagat

(57) Abstract :
ABSTRACT OPTICAL NANOSENSOR FOR EARLY STAGE DETECTION OF BACTOCERA OLEA INFESTATION The invention provides an optical nanosensor for early detection of pheromones of the olive fruit fly. The optical nanosensor includes a functionalized surface, a mount for embedding the functionalized surface and a perforated housing for replacably retaining the mount. After the detection of the pheromone, the user may be alerted of an impending pest attack and the user can then take appropriate pest control measures.

No. of Pages : 24 No. of Claims : 10

(12) PATENT APPLICATION PUBLICATION
(19) INDIA
(22) Date of filing of Application :18/07/2015
(21) Application No.3697/CHE/2015 A
(43) Publication Date : 20/01/2017

(54) Title of the invention : DATA VOLUME MIGRATION IN DISTRIBUTED STORAGE SYSTEMS

(51) International classification	:G06F	(71)**Name of Applicant :**
(31) Priority Document No	:NA	**1)HEWLETT-PACKARD DEVELOPMENT COMPANY, L.P.**
(32) Priority Date	:NA	
(33) Name of priority country	:NA	Address of Applicant :11445 Compaq Center Drive W., Houston, TX 77070, United States of America U.S.A.
(86) International Application No	:NA	
Filing Date	:NA	(72)**Name of Inventor :**
(87) International Publication No	: NA	**1)NARENDRA CHIRUMAMILLA**
(61) Patent of Addition to Application Number	:NA	**2)KESHETTI MAHESH**
Filing Date	:NA	**3)GOVINDARAJA NAYAKA B**
(62) Divisional to Application Number	:NA	**4)RANJITH REDDY BASIREDDY**
Filing Date	:NA	**5)TARANISEN MOHANTA**

(57) Abstract :
In one example, a system for migrating data volume in distributed storage systems is described which includes a source storage system and a destination storage system. The source storage system includes source storage nodes. The destination storage system is communicatively connected to the source storage system. The destination storage system includes destination storage nodes. The source storage system to obtain volume layout information associated with the destination storage system, map data volume associated with the source storage system with at least one destination storage node based on the volume layout information, and to migrate the data volume directly from the source storage nodes associated with the data volume to the at least one destination storage node based on the mapped data volume. The data volume is distributed across the source storage nodes in the source storage system.

No. of Pages : 23 No. of Claims : 15

(12) PATENT APPLICATION PUBLICATION
(21) Application No.201647035928 A
(19) INDIA
(22) Date of filing of Application :20/10/2016
(43) Publication Date : 20/01/2017

(54) Title of the invention : METHOD AND APPARATUS FOR DETERMINING SIGNAL-TO-NOISE RATIO IN WIRELESS COMMUNICATION

(51) International classification :H04W 24/00
(31) Priority Document No :NA
(32) Priority Date :NA
(33) Name of priority country :NA
(86) International Application No :PCT/CN2015/082582
Filing Date :27/06/2015
(87) International Publication No :WO/2017/000095
(61) Patent of Addition to Application Number :NA
Filing Date :NA
(62) Divisional to Application Number :NA
Filing Date :NA

(71)**Name of Applicant :**
1) HUAWEI TECHNOLOGIES CO., LTD.,
Address of Applicant :Huawei Administration Building, Bantian, Longgang District, Shenzhen, Guangdong 518129, P. R. China. China
(72)**Name of Inventor :**
1) WANG Hao

(57) Abstract :
Relating to the field of wireless communications, a method and an apparatus for determining a signal-to-noise ratio in wireless communication are provided. The method includes: determining an effective signal-to-noise ratio of a received signal of current user equipment in the wireless 5 communication; acquiring at least one parameter used to correct the effective signal-to-noise ratio; and determining, based on a mapping relationship used to correct the effective signal-to-noise ratio, a corrected signal-to-noise ratio corresponding to the at least one parameter and the effective signal-to-noise ratio.

No. of Pages : 29 No. of Claims : 22

(12) PATENT APPLICATION PUBLICATION
(19) INDIA
(22) Date of filing of Application :12/06/2015
(21) Application No.2958/CHE/2015 A
(43) Publication Date : 20/01/2017

(54) Title of the invention : SUSPENSION ASSEMBLY

(51) International classification	:B62K 25/00
(31) Priority Document No	:NA
(32) Priority Date	:NA
(33) Name of priority country	:NA
(86) International Application No	:NA
Filing Date	:NA
(87) International Publication No	: NA
(61) Patent of Addition to Application Number	:NA
Filing Date	:NA
(62) Divisional to Application Number	:NA
Filing Date	:NA

(71)**Name of Applicant :**
1)TVS MOTOR COMPANY LIMITED
Address of Applicant :JAYALAKSHMI ESTATES, NO.29, (OLD NO.8), HADDOWS ROAD, CHENNAI - 600 006, Tamil Nadu India
(72)**Name of Inventor :**
1)CHAVAN CHANDAN BANSILAL
2)MALLIKARJUN MARANOOR

(57) Abstract :
The present subject matter relates to a front suspension assembly for a two-wheeled vehicle. The front suspension assembly includes a front suspension sub assembly (206) Comprising of an inlet passage (302) and an outlet passage. The inlet passage (302) comprises of a filter element (207) to filter air passing into the pair of front forks. The air is let inside the pair of front forks through at least one inlet opening (301) and a first check valve (203). The air from the pair of front forks is let outside through an outlet passage comprising a second check valve (202). The front suspension sub assembly (206) facilitates pressure regulation inside the pair of front forks.

No. of Pages : 15 No. of Claims : 10

(12) PATENT APPLICATION PUBLICATION
(21) Application No.3620/CHE/2015 A
(19) INDIA
(22) Date of filing of Application :15/07/2015
(43) Publication Date : 20/01/2017

(54) Title of the invention : BIOLOGICALLY INSPIRED MEMS DIRECTIONAL MICROPHONE WITH IMPROVED SENSITIVITY

(51) International classification	:B81B 3/00
(31) Priority Document No	:NA
(32) Priority Date	:NA
(33) Name of priority country	:NA
(86) International Application No	:NA
Filing Date	:NA
(87) International Publication No	: NA
(61) Patent of Addition to Application Number	:NA
Filing Date	:NA
(62) Divisional to Application Number	:NA
Filing Date	:NA

(71)**Name of Applicant :**
1)Nitte Meenakshi Institute of Technology
Address of Applicant :Govindpura, Gollahalli, Yelahanka, Off Bellary Road, After Kogilu Cross, Bangalore-560064, Karnataka, India. Karnataka India
(72)**Name of Inventor :**
1)Veda Sandeep Nagaraja
2)Dr. Sampatrao L. Pinjare

(57) Abstract :
ABSTRACT According to one aspect, a Micro Electromechanical System (MEMS) directional microphone comprises a sensing plane comprising first and second membrane configured to move based on the incidence of a sound waves and also a first coupler beam and a second coupler beam configured to hold the first and the second membrane, a plurality of interdigital fingers configured to provide a differential capacitance sensing, a first and a second set of I/O (input/output) pads configured to transfer the differential capacitance measured by the interdigital fingers to a external device and a set of springs configured to provide a electrical connection. According to another aspect, set of springs attach the first and second membrane to the first set of I/O pads. The first and second coupler beams are positioned between the first membrane and the second membrane to effectively form the sensing plane capable of sensing low audio waves.

No. of Pages : 28 No. of Claims : 6

(12) PATENT APPLICATION PUBLICATION
(19) INDIA
(22) Date of filing of Application :13/07/2015

(21) Application No.3570/CHE/2015 A
(43) Publication Date : 20/01/2017

(54) Title of the invention : BACKUP-CLIENT INTERFACE DEVICE

(51) International classification :G06F
(31) Priority Document No :NA
(32) Priority Date :NA
(33) Name of priority country :NA
(86) International Application No :NA
Filing Date :NA
(87) International Publication No : NA
(61) Patent of Addition to Application Number :NA
Filing Date :NA
(62) Divisional to Application Number :NA
Filing Date :NA

(71)**Name of Applicant :**
1)HEWLETT PACKARD ENTERPRISE DEVELOPMENT LP
Address of Applicant :11445 Compaq Center Drive West, Houston, Texas 77070, United States of America U.S.A.
(72)**Name of Inventor :**
1)BETHANABHOTLA , Raja Rama Mohan

(57) Abstract :
Examples disclosed herein relate to a backup-client interface device. As an example, in response to a request, an encrypted backup data associated with a tagged attribute is received from the remote backup server, wherein the tagged attribute matches a device identifier of the backup-client interface device. Once received, the encrypted backup data is decrypted using the device identifier.

FIG.1

No. of Pages : 27 No. of Claims : 15

(12) PATENT APPLICATION PUBLICATION
(21) Application No.201644024105 A
(19) INDIA
(22) Date of filing of Application :14/07/2016
(43) Publication Date : 20/01/2017

(54) Title of the invention : DEVICE AND METHOD OF HANDLING AUTHENTICATION PROCEDURE

(51) International classification	:H04W 12/00
(31) Priority Document No	:62/192,078
(32) Priority Date	:14/07/2015
(33) Name of priority country	:U.S.A.
(86) International Application No	:NA
Filing Date	:NA
(87) International Publication No	: NA
(61) Patent of Addition to Application Number	:NA
Filing Date	:NA
(62) Divisional to Application Number	:NA
Filing Date	:NA

(71)**Name of Applicant :**
1)HTC Corporation
Address of Applicant :No. 23, Xinghua Road, Taoyuan District, Taoyuan City 330, Taiwan, R.O.C. China
(72)**Name of Inventor :**
1)WU, Chih-Hsiang

(57) Abstract :
A network comprising a cellular network and a WLAN for handling an authentication procedure with a communication device comprises a storage unit for storing instructions and a processing means coupled to the storage unit. The processing means is configured to execute the instructions stored in the storage unit. The instructions comprise performing a first connection to the communication device by the cellular network; performing a second connection to the communication device by the WLAN; initiating an EAP AKA procedure to the communication device by the WLAN, if the communication device is not configured with a communication of cellular PDUs via the WLAN; and initiating an eNB assisted authentication procedure to the communication device by the cellular network, if the communication device is configured with the communication of the cellular PDUs via the WLAN.

No. of Pages : 22 No. of Claims : 15

(12) PATENT APPLICATION PUBLICATION
(21) Application No.201644024279 A
(19) INDIA
(22) Date of filing of Application :15/07/2016
(43) Publication Date : 20/01/2017

(54) Title of the invention : HOLDING ELEMENT FOR POUCH CELLS

(51) International classification	:H01M 2/00
(31) Priority Document No	:15 176 896.7
(32) Priority Date	:15/07/2015
(33) Name of priority country	:EPO
(86) International Application No	:NA
Filing Date	:NA
(87) International Publication No	: NA
(61) Patent of Addition to Application Number	:NA
Filing Date	:NA
(62) Divisional to Application Number	:NA
Filing Date	:NA

(71)**Name of Applicant :**
1)CARL FREUDENBERG KG
Address of Applicant :Hoehnerweg 2-4, 69469 Weinheim, Germany Germany
(72)**Name of Inventor :**
1)KRITZER, Peter
2)NAHRWOLD, Olaf
3)BOGGASCH, Mark
4)PRESSLER, Ulla

(57) Abstract :
A holding element (4) for supporting pouch cells, consisting of a base body (5) is, with a view to the objective of accommodating pouch cells safely and cost-effectively in a frame or casing, characterised in that, the base body (5) is designed as a profile with a contact surface (5a) for positioning at a sealed seam (2) of a pouch cell. (Figure 2)

No. of Pages : 45 No. of Claims : 17

(12) PATENT APPLICATION PUBLICATION
(21) Application No.3688/CHE/2015 A
(19) INDIA
(22) Date of filing of Application :17/07/2015
(43) Publication Date : 20/01/2017

(54) Title of the invention : A METHOD AND A DEVICE FOR PROVIDING DRIVING SUGGESTIONS

(51) International classification :G08G
(31) Priority Document No :NA
(32) Priority Date :NA
(33) Name of priority country :NA
(86) International Application No :NA
Filing Date :NA
(87) International Publication No : NA
(61) Patent of Addition to Application Number :NA
Filing Date :NA
(62) Divisional to Application Number :NA
Filing Date :NA

(71)**Name of Applicant :**
1)Robert Bosch Engineering and Business Solutions Private Limited
Address of Applicant :123, Industrial Layout, Hosur Road, Koramangala, Bangalore 560095, Karnataka, INDIA Karnataka India
2)Robert Bosch GmbH
(72)**Name of Inventor :**
1)Naveen Vijayadharan REMANI
2)Vijil Kumar BALARAMAN
3)Deepak RAVIKUMAR

(57) Abstract :
A device 1000 to provide at least one driving suggestion is disclosed. The device 1000 comprises a time calculation means 101 to calculate a time to reach at least one narrow road section along a route for an ego vehicle 200 and each of at least one surrounding vehicle 300; a congestion prediction means 102 to predict a congestion at a starting location of the at least one narrow road section based on the calculated time of the ego vehicle 200 and each of the surrounding vehicle 300; and a suggestion means 103 to provide at least one suggestion to driver of the ego vehicle 200 based on the prediction. (Figure 1)

No. of Pages : 16 No. of Claims : 10

(12) PATENT APPLICATION PUBLICATION
(19) INDIA
(22) Date of filing of Application :16/07/2015
(21) Application No.3641/CHE/2015 A
(43) Publication Date : 20/01/2017

(54) Title of the invention : MULTIGIG SOLUTION ON CONVENTIONAL SGMII AND XFI CAPABLE SYSTEM

(51) International classification	:H04L	(71)**Name of Applicant :**
(31) Priority Document No	:NA	**1)CISCO TECHNOLOGY, INC.**
(32) Priority Date	:NA	Address of Applicant :170 West Tasman Drive, San Jose,
(33) Name of priority country	:NA	California 95134-1706 United States of America U.S.A.
(86) International Application No	:NA	(72)**Name of Inventor :**
Filing Date	:NA	**1)CHANDRAN, Ajith**
(87) International Publication No	: NA	**2)SETHI, Kabiraj**
(61) Patent of Addition to Application Number	:NA	**3)RAO VEMPALI, Chandra Sekhara**
Filing Date	:NA	**4)AGARWAL, Neha**
(62) Divisional to Application Number	:NA	
Filing Date	:NA	

(57) Abstract :
MULTIGIG SOLUTION ON CONVENTIONAL SGMII AND XFI CAPABLE SYSTEM Methods and systems are disclosed which may provide MultiGig capability to a system where a physical layer device (PHY) or a network device does not have the capacity to support all available line speeds while operating in a single system-interface mode between MAC and PHY devices.

No. of Pages : 24 No. of Claims : 20

(12) PATENT APPLICATION PUBLICATION
(21) Application No.3692/CHE/2015 A
(19) INDIA
(22) Date of filing of Application :17/07/2015
(43) Publication Date : 20/01/2017

(54) Title of the invention : METHOD AND SYSTEM FOR SPECTRALLY EFFICIENT CHANNEL STATE INFORMATION ESTIMATION USING IN-BAND FULL DUPLEX COMMUNICATION •

(51) International classification	:H04B 7/00
(31) Priority Document No	:NA
(32) Priority Date	:NA
(33) Name of priority country	:NA
(86) International Application No	:NA
Filing Date	:NA
(87) International Publication No	: NA
(61) Patent of Addition to Application Number	:NA
Filing Date	:NA
(62) Divisional to Application Number	:NA
Filing Date	:NA

(71)**Name of Applicant :**
1)Centre of Excellence in Wireless Technology
Address of Applicant :CEWiT, 3rd Floor, IITM Research Park, Kanagam Road, Taramani, Chennai -600 113 Tamil Nadu India
2)Indian Institute of Technology Madras
(72)**Name of Inventor :**
1)Mr. Ankit Sharma
2)Dr. J Klutto Milleth
3)Dr. Radha Krishna Ganti
4)Mr. Sunil Kaimalettu
5)Prof. Bhaskar Ramamurthi

(57) Abstract :
ABSTRACT System and Method for In Band Full Duplex communication in radio network The embodiments herein provide a method for In Band Full Duplex (IBFD) communication in a radio network including at least one IBFD node, at least one first non-IBFD User Equipment (UE) and at least one second non-IBFD UE. The method includes transmitting by the at least one IBFD node a first signal to the at least one first non-IBFD UE over a forward channel, and receiving by the at least one IBFD node a second signal from the at least one second non-IBFD UE over the same forward channel simultaneously, where the second signal includes at least one of a pilot signal, Channel State Information (CSI), and control information, where the forward channel is orthogonal to a reverse channel in at least one of time, frequency, space, and code. FIG. 4

No. of Pages : 57 No. of Claims : 55

(12) PATENT APPLICATION PUBLICATION
(19) INDIA
(22) Date of filing of Application :17/07/2015
(21) Application No.3694/CHE/2015 A
(43) Publication Date : 20/01/2017

(54) Title of the invention : METHOD AND SYSTEM FOR DYNAMICALLY ORGANIZING AND CONTROLLING DEVICE CONTENT (S-AROUND)

(51) International classification	:G06F 17/00
(31) Priority Document No	:NA
(32) Priority Date	:NA
(33) Name of priority country	:NA
(86) International Application No	:NA
Filing Date	:NA
(87) International Publication No	: NA
(61) Patent of Addition to Application Number	:NA
Filing Date	:NA
(62) Divisional to Application Number	:NA
Filing Date	:NA

(71)**Name of Applicant :**
1)SAMSUNG R&D INSTITUTE INDIA BANGALORE PRIVATE LIMITED
Address of Applicant :# 2870, ORION Building, Bagmane Constellation Business Park, Outer Ring Road, Doddanakundi Circle, Marathahalli Post, Bangalore -560037, Karnataka, India Karnataka India
(72)**Name of Inventor :**
1)KRISHNAMURTHY, Magesh
2)JANARDHANA, Anil Babu Melekote
3)THANGADORAI, Kavin Kumar
4)CHAUHAN, Swapnil
5)RAJA, Barath Raj Kandur
6)SAJWAN, Jitender
7)KESHRI, Nikhil
8)THADIGOTLA, Murali Maheswara Reddy
9)KUMAR, Amit

(57) Abstract :
ABSTRACT The various embodiments herein disclose a system and method for managing user content on first user equipment (UE). According to an embodiment of the present invention, the method comprises of identifying, by a first User Equipment (UE), relative position of one or more second user equipment™s (UE™s) with respect to the first UE, identifying a location where the one or more second UE™s are to be displayed on the first UE, selecting one or more second UE™s displayed on the first UE based on the identified location, and accessing user content of the selected one or more second UE™s by the first UE. Figure 3

No. of Pages : 45 No. of Claims : 7

(12) PATENT APPLICATION PUBLICATION
(21) Application No.3627/CHE/2015 A
(19) INDIA
(22) Date of filing of Application :15/07/2015
(43) Publication Date : 20/01/2017

(54) Title of the invention : METHOD AND SYSTEM FOR INVOKING CONTEXT SPECIFIC ACTIONS IN A MULTI-WINDOW USER DEVICE

(51) International classification :G06F
(31) Priority Document No :NA
(32) Priority Date :NA
(33) Name of priority country :NA
(86) International Application No :NA
Filing Date :NA
(87) International Publication No : NA
(61) Patent of Addition to Application Number :NA
Filing Date :NA
(62) Divisional to Application Number :NA
Filing Date :NA

(71)**Name of Applicant :**
1)SAMSUNG R&D Institute India - Bangalore Private Limited
Address of Applicant :# 2870, Orion Building, Bagmane Constellation Business Park, Outer Ring Road, Doddanekundi Circle, Marathahalli Post,Bangalore-560 037, India Karnataka India
(72)**Name of Inventor :**
1)Sukumar Moharana
2)Shambu M T
3)Kranti Chalamalasetti
4)Venkata Subrahmanyam Gajavalli
5)Pradeep Kumar Govindaraju
6)Sushant Khanna
7)Kumar Sasmit
8)Ankit Kawatia

(57) Abstract :
ABSTRACT A method and system for invoking a context specific action in a multi-window user device. The user device monitors current context of at least two applications that are currently open on the multi-window user device. The system collects a first input on a first application window of said multi-window user device, and a second input on a second application window of said multi-window user device. Further, based on the current context of application that are open on the first application window and the second application window, the system identifies a context specific action that needs to be triggered. The identified context specific action is then triggered by the system. FIG. 3

No. of Pages : 26 No. of Claims : 6

(12) PATENT APPLICATION PUBLICATION
(21) Application No.3628/CHE/2015 A
(19) INDIA
(22) Date of filing of Application :15/07/2015
(43) Publication Date : 20/01/2017

(54) Title of the invention : INSTRUMENT PANEL WITH COLLAPSIBLE BRACKETS FOR REDUCING HEAD IMPACT LEVEL OF OCCUPANT IN A VEHICLE

(51) International classification	:B60R 21/00
(31) Priority Document No	:NA
(32) Priority Date	:NA
(33) Name of priority country	:NA
(86) International Application No	:NA
Filing Date	:NA
(87) International Publication No	: NA
(61) Patent of Addition to Application Number	:NA
Filing Date	:NA
(62) Divisional to Application Number	:NA
Filing Date	:NA

(71)**Name of Applicant :**
1)Mahindra & Mahindra Limited
Address of Applicant :Mahindra & Mahindra Ltd., MRV, Mahindra World City (MWC), Plot No. 41/1, Anjur Post, Chengalpattu, Kanchipuram District 603204 (TN) INDIA Tamil Nadu India
(72)**Name of Inventor :**
1)LAWRENCE ANTHONIAPPAN
2)KANNAN PALANIAPPAN
3)SUBHAN ALI SHAIK
4)SRIDHAR LINGAN

(57) Abstract :
ABSTRACT Instrument panel assembly for reducing head impact level of occupant in the vehicle includes, a cross car beam, a plurality of collapsible brackets, an instrument panel carrier, a upper glove box lid and a lower glove box lid. The upper glove box lid and glove box lid are mounted to the instrument panel carrier. The collapsible bracket includes a first portion having a first leg and a second leg and the first leg of first portion is connected to the instrument panel carrier and a second portion defining a curve is connected to the cross car beam. The second portion is extended from said first portion. The collapsible brackets deform and absorb the impact energy at head impact zone of the instrument panel assembly during a crash event. Fig. 6

No. of Pages : 25 No. of Claims : 11

(12) PATENT APPLICATION PUBLICATION
(21) Application No.3690/CHE/2015 A
(19) INDIA
(22) Date of filing of Application :17/07/2015
(43) Publication Date : 20/01/2017

(54) Title of the invention : FINGOLIMOD PHARMACEUTICAL COMPOSITIONS

(51) International classification :A61K
(31) Priority Document No :NA
(32) Priority Date :NA
(33) Name of priority country :NA
(86) International Application No :NA
Filing Date :NA
(87) International Publication No : NA
(61) Patent of Addition to Application Number :NA
Filing Date :NA
(62) Divisional to Application Number :NA
Filing Date :NA

(71)**Name of Applicant :**
1)SHILPA MEDICARE LIMITED
Address of Applicant :SHILPA MEDICARE LIMITED 2nd Floor, 10/80, Rajendra Gunj, RAICHUR, KARNATAKA, India Karnataka India
(72)**Name of Inventor :**
1)SHIVAKUMAR ; PRADEEP
2)TOPPALADODDI;KRISHNAMURTHY
3)CHATURVEDI; AKSHAY KANT

(57) Abstract :
ABSTRACT The present invention relates to a pharmaceutical composition comprising fingolimod and/or pharmaceutical acceptable salt thereof and dicalcium phosphate. The composition is preferably formulated in a form of a powder for oral administration filled into capsules and/or a compressed tablet.

No. of Pages : 12 No. of Claims : 9

(12) PATENT APPLICATION PUBLICATION
(19) INDIA
(22) Date of filing of Application :16/07/2015
(21) Application No.3640/CHE/2015 A
(43) Publication Date : 20/01/2017

(54) Title of the invention : SYNERGISTIC COMPOSITION FOR SYNCHRONIZED AROMATASE AND PPAR REGULATION

(51) International classification :A61K
(31) Priority Document No :NA
(32) Priority Date :NA
(33) Name of priority country :NA
(86) International Application No :NA
Filing Date :NA
(87) International Publication No : NA
(61) Patent of Addition to Application Number :NA
Filing Date :NA
(62) Divisional to Application Number :NA
Filing Date :NA

(71)**Name of Applicant :**
1)Dr.Achiraman
Address of Applicant :Dept. of Environmental Biotechnology, Bharathidasan University, Tiruchirappalli - 620015, Tamilnadu Tamil Nadu India
2)Suriyakala
3)R. Ramachandran
4)Dr. D. Sankarganesh
5)Dr. S. Kamalakkannan
(72)**Name of Inventor :**
1)Dr.Achiraman
2)Suriyakala
3)R. Ramachandran
4)Dr. D. Sankarganesh
5)Dr. S. Kamalakkannan

(57) Abstract :
This invention relates to a synergistic pharmaceutical composition or a nutraceutical composition or a supplement or medical contrivance for use as an aromatase activator with synchronized regulation of PPAR- activity. The composition mainly focuses on amelioration of polycystic ovary syndrome and its associated disorders such as obesity and diabetes via enhancing expression of Cyp19a1 (aromatase) in ovarian tissues and PPAR- in ovary, adipose tissue and liver. Application of this composition can be oral or topical.

No. of Pages : 19 No. of Claims : 8

(12) PATENT APPLICATION PUBLICATION
(19) INDIA
(22) Date of filing of Application :14/07/2015
(21) Application No.3600/CHE/2015 A
(43) Publication Date : 20/01/2017

(54) Title of the invention : SYSTEM AND METHOD PROVIDING E-COMMERCE MANAGEMENT PLATFORM FOR OMNI-CHANNEL RETAILERS AND SELLERS

(51) International classification	:G06Q 30/00
(31) Priority Document No	:NA
(32) Priority Date	:NA
(33) Name of priority country	:NA
(86) International Application No	:NA
Filing Date	:NA
(87) International Publication No	: NA
(61) Patent of Addition to Application Number	:NA
Filing Date	:NA
(62) Divisional to Application Number	:NA
Filing Date	:NA

(71)**Name of Applicant :**
1)Energica Advisory Services Pvt Ltd
Address of Applicant :B1, Cauvery Apartments, Brindavan Street, Mylapore, Chennai 600004, Tamil Nadu, India Tamil Nadu India
(72)**Name of Inventor :**
1)ARUMUGAM, Nachadalingam Vibin
2)RAMESH BABU, Somasundaram

(57) Abstract :
ABSTRACT SYSTEM AND METHOD PROVIDING E COMMERCE MANAGEMENT PLATFORM FOR OMNI CHANNEL RETAILERS AND SELLERS The present description relates to a system and method providing e-commerce management platform for Omni channel retailers and sellers in Marketplaces. The system and method provides marketplace listing management, goods-in management, unified inventory management, delivery fulfillment management, dynamic pricing management, competitor monitoring, stationary and postage production, dynamic stock re-ordering, dashboard and reports The description provides progressive growth and best potential profits to sellers along with creating a healthy competitive market environment leading to the betterment of all the stakeholders involved in the Omni channel Value Chain. 13

No. of Pages : 23 No. of Claims : 5

(12) PATENT APPLICATION PUBLICATION
(21) Application No.2854/CHE/2015 A
(19) INDIA
(22) Date of filing of Application :08/06/2015
(43) Publication Date : 20/01/2017

(54) Title of the invention : HOLDING STRUCTURE FOR A TWO WHEELED VEHICLE

(51) International classification	:A61K 38/00
(31) Priority Document No	:NA
(32) Priority Date	:NA
(33) Name of priority country	:NA
(86) International Application No	:NA
Filing Date	:NA
(87) International Publication No	: NA
(61) Patent of Addition to Application Number	:NA
Filing Date	:NA
(62) Divisional to Application Number	:NA
Filing Date	:NA

(71)**Name of Applicant :**
1)TVS MOTOR COMPANY LIMITED
Address of Applicant :JAYALAKSHMI ESTATES, NO.29, HADDOWS ROAD, CHENNAI - 600 006, Tamil Nadu India
(72)**Name of Inventor :**
1)AJITH VADAKEVEETIL
2)SHATHICK BASHA JEELANI
3)KURMAM SHANMUKHA PRADEEP
4)M KALAIVANI
5)AROMAL VISWANADHAN
6)AYYAPPAN KARUPPASAMY SATHISH PANDIAN
7)RAVISANKAR RAJAMANI

(57) Abstract :
The present subject matter described herein relates to a holding structure (22) which is adapted to be detachably attached to a front housing unit (21). The holding structure (22) includes a central mounting wall (22a) adapted to receive a lighting device (17), a pair of signalling devices (18), and a display device (19). The construction of the holding structure (22) as per the present subject matter aids in receiving the above mentioned devices without involving the use of individual mounting brackets. Thus, the holding structure (22) aids in reducing overall weight of the housing assembly used for supporting the lighting device (17), the pair of signalling devices (18), and the display device (19).

No. of Pages : 18 No. of Claims : 10

(12) PATENT APPLICATION PUBLICATION
(19) INDIA
(22) Date of filing of Application :15/07/2015
(21) Application No.3608/CHE/2015 A
(43) Publication Date : 20/01/2017

(54) Title of the invention : LONG BONE SUNSTITUTES FROM BIOMIMETIC SCAFFOLD OF PLANT TISSUES

(51) International classification	:A61L 27/00
(31) Priority Document No	:NA
(32) Priority Date	:NA
(33) Name of priority country	:NA
(86) International Application No	:NA
Filing Date	:NA
(87) International Publication No	: NA
(61) Patent of Addition to Application Number	:NA
Filing Date	:NA
(62) Divisional to Application Number	:NA
Filing Date	:NA

(71)**Name of Applicant :**
1)INDIAN INSTITUTE OF TECHNOLOGY MADRAS
Address of Applicant :THE DEAN, INDUSTRIAL CONSULTANCY & SPONSORED RESEARCH [ICSR] INDIAN INSTITUTE OF TECHNOLOGY MADRAS, IIT P.O, CHENNAI - 600 036, Tamil Nadu India
(72)**Name of Inventor :**
1)DR.T.S.SAMPATH KUMAR
2)DR.SOMA GUHATHAKURTA

(57) Abstract :
The present inventors have uncovered a method of manufacturing a scaffold of hybrid nature, part of which is a natural plant biomaterial processed appropriately with effective porosity having received electrospun nanofibre coating of hydroxy apatite along with titanium oxide or zirconium or ceramic blend of hydroxyapatite., metallic and cera mic nano particles thus reducing the natural biomater ials pore sizes appropriate for long bone cancellous and cortical pore sizes. Creating an environment having a continuous or stepwise gradient of porosity, with adequate pore size, weight -per-volume and/or agents attached to, embedded into it. Such an electrospun hybrid scaffold can be used as a scaffold for guided tissue regeneration and/or repair.

No. of Pages : 25 No. of Claims : 10

(12) PATENT APPLICATION PUBLICATION
(21) Application No.3701/CHE/2015 A
(19) INDIA
(22) Date of filing of Application :18/07/2015
(43) Publication Date : 20/01/2017

(54) Title of the invention : READY TO FIT MODULAR OIL IMMERSED BRAKE FOR TRACTOR APPLICATIONS

(51) International classification	:F16D 55/00
(31) Priority Document No	:NA
(32) Priority Date	:NA
(33) Name of priority country	:NA
(86) International Application No	:NA
Filing Date	:NA
(87) International Publication No	: NA
(61) Patent of Addition to Application Number	:NA
Filing Date	:NA
(62) Divisional to Application Number	:NA
Filing Date	:NA

(71)**Name of Applicant :**
1)Brakes India Private Limited
Address of Applicant :Brakes India Pvt Ltd, MTH Road, Padi, Chennai 600050 Tamil Nadu India
(72)**Name of Inventor :**
1)B.Govindaraj
2)N.Satheeshkumar
3)M.Balasingh

(57) Abstract :
ABSTRACT A novel compact affordable ready to fit modular oil immersed brake for use in tractors consisting of a housing, an actuating unit assy, an intermediate disc, a friction disc, a sleeve, a circlip, a gasket, a cover plate, set screws and a boot, which is supplied as a complete brake set and ensures easy and faster way of assembly.

No. of Pages : 16 No. of Claims : 9

(12) PATENT APPLICATION PUBLICATION
(21) Application No.3580/CHE/2015 A
(19) INDIA
(22) Date of filing of Application :13/07/2015
(43) Publication Date : 20/01/2017

(54) Title of the invention : AN OIL TO CURE ASTHMA, ALLERGIC RHYNITISM, RHEUMATIC COMPLAINTS

(51) International classification :A61K
(31) Priority Document No :NA
(32) Priority Date :NA
(33) Name of priority country :NA
(86) International Application No :NA
Filing Date :NA
(87) International Publication No : NA
(61) Patent of Addition to Application Number :NA
Filing Date :NA
(62) Divisional to Application Number :NA
Filing Date :NA

(71)**Name of Applicant :**
1)VIJAYAMMA SABU
Address of Applicant :Gokulam (H) Nadakkavu (p.o) Udayamperoor, Ernakulam-682307, Kerala Kerala India
(72)**Name of Inventor :**
1)VIJAYAMMA SABU

(57) Abstract :
The present invention relates to a composition (ayurvedic oil) to cure asthma and rheumatic complaints. In one embodiment the composition (ayurvedic oil) comprises tulsi, small onion, black pepper and coconut oil.

No. of Pages : 19 No. of Claims : 7

(12) PATENT APPLICATION PUBLICATION
(21) Application No.3581/CHE/2015 A
(19) INDIA
(22) Date of filing of Application :13/07/2015
(43) Publication Date : 20/01/2017

(54) Title of the invention : A COMPOSITION (SYRUP) TO CURE DISEASES

(51) International classification :B67D
(31) Priority Document No :NA
(32) Priority Date :NA
(33) Name of priority country :NA
(86) International Application No :NA
Filing Date :NA
(87) International Publication No : NA
(61) Patent of Addition to Application Number :NA
Filing Date :NA
(62) Divisional to Application Number :NA
Filing Date :NA

(71)**Name of Applicant :**
1)VIJAYAMMA SABU
Address of Applicant :Gokulam (H) Nadakkavu (p.o) Udayamperoor, Ernakulam-682307, Kerala Kerala India
(72)**Name of Inventor :**
1)VIJAYAMMA SABU

(57) Abstract :
The present invention relates to a composition (syrup) to cure diseases. In one embodiment the composition (syrup) comprises tulsi, gooseberry and Jaggery.

No. of Pages : 17 No. of Claims : 6

(12) PATENT APPLICATION PUBLICATION
(21) Application No.4831/CHE/2015 A
(19) INDIA
(22) Date of filing of Application :11/09/2015
(43) Publication Date : 20/01/2017

(54) Title of the invention : CONTROL CENTER SYSTEM FOR SEARCHING AND MANAGING OBJECTS ACROSS DATA CENTERS

(51) International classification	:G06F 17/00
(31) Priority Document No	:US 14798738
(32) Priority Date	:14/07/2015
(33) Name of priority country	:U.S.A.
(86) International Application No	:NA
Filing Date	:NA
(87) International Publication No	: NA
(61) Patent of Addition to Application Number	:NA
Filing Date	:NA
(62) Divisional to Application Number	:NA
Filing Date	:NA

(71)**Name of Applicant :**
1)Payoda Technologies Private Limited
Address of Applicant :Module No.120/2, North Block, 1st Floor, ELCOT SEZ, TIDEL PARK, Coimbatore-641014, Tamil Nadu, India Tamil Nadu India
(72)**Name of Inventor :**
1)Anand Purusothaman
2)Murali Palanisamy

(57) Abstract :
A centralized control center system for searching and managing one or more objects on granular object level in one or more datacenters is provided. The control center system includes a memory unit, and a processor. The memory unit stores a database and a set of modules. The processor executes the set of modules. The set of modules includes a search module, a topology view module, and an orphan object visibility module. The search module is configured to search and retrieve the one or more objects based on a search query. The topology view module is configured to display the one or more objects connected to the one or more datacenters in a hierarchy. The orphan object visibility module is configured to display (i) an object without a parent object, and (ii) a pool without a parent pool.

No. of Pages : 38 No. of Claims : 15

(12) PATENT APPLICATION PUBLICATION
(19) INDIA
(22) Date of filing of Application :05/07/2016
(21) Application No.201644022991 A
(43) Publication Date : 20/01/2017

(54) Title of the invention : HUB ASSEMBLY AND PROPELLER ASSEMBLIES •

(51) International classification	:B64C 11/00
(31) Priority Document No	:14/797233
(32) Priority Date	:13/07/2015
(33) Name of priority country	:U.S.A.
(86) International Application No	:NA
Filing Date	:NA
(87) International Publication No	: NA
(61) Patent of Addition to Application Number	:NA
Filing Date	:NA
(62) Divisional to Application Number	:NA
Filing Date	:NA

(71)**Name of Applicant :**
1)GE AVIATION SYSTEMS LLC
Address of Applicant :3290 Patterson Avenue, SE Grand Rapids, Michigan 49512-1991 United States of America U.S.A.
(72)**Name of Inventor :**
1)PAWAR, Rajendra Vishwanath
2)YAMARTHI, David Raju
3)KURVINKOP, Amit Arvind
4)KUMAR, Sandeep
5)PERIASAMY, Murugesan
6)GANIGER, Ravindra Shankar
7)AGRAWAL, Bajarang
8)G, Nagashiresha

(57) Abstract :
ABSTRACT Hub assembly and propeller blade assemblies incorporating partial hub assembly having a backing plate with a set of partial root seats and a set of clamps selectively operably couplable to the backing plate with each clamp defining a second partial root seat and wherein when a clamp is coupled to the backing plate a root seat is formed, propeller blades having roots are received within the root seats.

No. of Pages : 18 No. of Claims : 20

(12) PATENT APPLICATION PUBLICATION
(19) INDIA
(22) Date of filing of Application :08/12/2016
(21) Application No.201647041977 A
(43) Publication Date : 20/01/2017

(54) Title of the invention : METHODS AND SYSTEMS FOR TRIGGERING EFFICIENT APPLICATION SYNCHRONIZATION

(51) International classification	:H04L29/08,H04W4/00,H04W48/18
(31) Priority Document No	:62/029278
(32) Priority Date	:25/07/2014
(33) Name of priority country	:U.S.A.
(86) International Application No	:PCT/US2015/038081
Filing Date	:26/06/2015
(87) International Publication No	:WO 2016/014214
(61) Patent of Addition to Application Number	:NA
Filing Date	:NA
(62) Divisional to Application Number	:NA
Filing Date	:NA

(71)**Name of Applicant :**
1)QUALCOMM INCORPORATED,
Address of Applicant :ATTN: International IP Administration, 5775 Morehouse Drive, San Diego, California 92121-1714, USA U.S.A.
(72)**Name of Inventor :**
1)TEMBEY, Priyanka
2)DAS, Saumitra Mohan
3)DA SILVA, Dilma
4)BHAVSAR,Vrajesh

(57) Abstract :
An example method of synchronizing application data between a mobile device and a remote computing device includes for each network of one or more networks collecting network data regarding a mobile device s current connectivity state to the respective network. The mobile device includes one or more mobile applications including application data. The method also includes detecting at the mobile device a current connection to a current network. The method further includes comparing one or more opportunity scores for synchronizing application data. The one or more opportunity scores includes an opportunity score for the current network. Each opportunity score is associated with a particular network. The method also includes determining based on the comparing whether the current network is a good opportunity network for syncing mobile application data.

No. of Pages : 31 No. of Claims : 30

(12) PATENT APPLICATION PUBLICATION
(21) Application No.201647041978 A
(19) INDIA
(22) Date of filing of Application :08/12/2016
(43) Publication Date : 20/01/2017

(54) Title of the invention : INTEGRATED CIRCUIT FOR DETERMINING WHETHER DATA STORED IN EXTERNAL NONVOLATIVE MEMORY IS VALID

(51) International classification :G06F21/64,G06F21/79
(31) Priority Document No :14/341703
(32) Priority Date :25/07/2014
(33) Name of priority country :U.S.A.
(86) International Application No :PCT/US2015/041941
Filing Date :24/07/2015
(87) International Publication No :WO 2016/014919
(61) Patent of Addition to Application Number :NA
Filing Date :NA
(62) Divisional to Application Number :NA
Filing Date :NA

(71)**Name of Applicant :**
1)QUALCOMM INCORPORATED,
Address of Applicant :Attn: International IP Administration, 5775 Morehouse Drive, San Diego, California 92121-1714, USA, U.S.A.
(72)**Name of Inventor :**
1)BENOIT, Olivier Jean
2)LUNDBLADE, Laurence Geoffrey
3)ASHKENAZI, Asaf

(57) Abstract :
An integrated circuit may comprise a secure volatile memory configured to store first data validity information associated with first data stored in an external nonvolatile memory; and a secure processor configured to: retrieve the first data validity information from a secure remote server over a secure communication channel wherein the secure processor uses mutual authentication with the secure remote server to secure the secure communication channel; store the first data validity information in the secure volatile memory; retrieve the first data from the external nonvolatile memory; obtain second data validity information associated with the first data; compare the first data validity information stored in the secure volatile memory with the second data validity information to generate a comparison value; and determine based on the comparison value whether the first data is valid.

No. of Pages : 14 No. of Claims : 30

(12) PATENT APPLICATION PUBLICATION
(21) Application No.3619/CHE/2015 A
(19) INDIA
(22) Date of filing of Application :15/07/2015
(43) Publication Date : 20/01/2017

(54) Title of the invention : PHARMACEUTICAL COMPOSITIONS OF AXITINIB

(51) International classification	:G06Q 10/00
(31) Priority Document No	:NA
(32) Priority Date	:NA
(33) Name of priority country	:NA
(86) International Application No	:NA
Filing Date	:NA
(87) International Publication No	: NA
(61) Patent of Addition to Application Number	:NA
Filing Date	:NA
(62) Divisional to Application Number	:NA
Filing Date	:NA

(71)**Name of Applicant :**
1)SHILPA MEDICARE LIMITED
Address of Applicant :SHILPA MEDICARE LIMITED, 10/80, SECOND FLOOR, RAJENDRA GUNJ, RAICHUR, KARNATAKA, INDIA Karnataka India
(72)**Name of Inventor :**
1)SHIVAKUMAR ; PRADEEP
2)TOPPALADODDI;KRISHNAMURTHY
3)CHATURVEDI; AKSHAY KANT

(57) Abstract :
ABSTRACT The present invention relates to an oral pharmaceutical composition comprising crystalline axitinib wherein oral composition is optionally coated, which coating is devoid of any metal oxides.

No. of Pages : 30 No. of Claims : 10

(12) PATENT APPLICATION PUBLICATION
(21) Application No.3594/CHE/2015 A
(19) INDIA
(22) Date of filing of Application :14/07/2015
(43) Publication Date : 20/01/2017

(54) Title of the invention : A GREEN TIRE HOLDING APPARATUS AND A METHOD THEREOF

(51) International classification	:B60C	(71)**Name of Applicant :**
(31) Priority Document No	:NA	**1)LARSEN & TOUBRO LIMITED**
(32) Priority Date	:NA	Address of Applicant :L&T Rubber Processing Machinery,
(33) Name of priority country	:NA	Chennai-Bangalore Highway, Post Bag No. 2, Vedal-631561,
(86) International Application No	:NA	Kanchipuram, TamilNadu, India Tamil Nadu India
Filing Date	:NA	(72)**Name of Inventor :**
(87) International Publication No	: NA	**1)KARUPPUSAMY, Ganesh, Raja**
(61) Patent of Addition to Application Number	:NA	**2)MAHMOOD, Mohamed, Ibrahim, Thakkadi**
Filing Date	:NA	**3)MURUGESAN, Saravanakumar**
(62) Divisional to Application Number	:NA	**4)KALIAMOORTHY, Rajmohan**
Filing Date	:NA	**5)RAJENDRAN, Suresh**

(57) Abstract :
The present invention provides a tire holding apparatus and a method thereof, for positioning and/or holding one or more uncured tire. The apparatus comprising: at least three tire holding means, to position the uncured tire, at least one shaft mounted on at least one flange bearing and rotatably engaged with the tire holding means and thereby provide at least one rotation to the tire holding means, at least one motor operably coupled to said flange bearing, to rotate the shaft, wherein said motor is actuated using at least one locking cylinder, the locking cylinder receive at least one control input and thereby adapted to actuate and/or cease said motor based on the control input, at least one sensing means to sense at least one position of the tire holding means subsequent to the rotation and thereby restrict the rotation of said tire holding means to the position.

No. of Pages : 25 No. of Claims : 15

(12) PATENT APPLICATION PUBLICATION
(21) Application No.3654/CHE/2015 A
(19) INDIA
(22) Date of filing of Application :16/07/2015
(43) Publication Date : 20/01/2017

(54) Title of the invention : ORALLY ADMINISTRABLE FILM DOSAGE FORMS CONTAINING FINGOLIMOD

(51) International classification	:A61K 9/00
(31) Priority Document No	:NA
(32) Priority Date	:NA
(33) Name of priority country	:NA
(86) International Application No	:NA
Filing Date	:NA
(87) International Publication No	: NA
(61) Patent of Addition to Application Number	:NA
Filing Date	:NA
(62) Divisional to Application Number	:NA
Filing Date	:NA

(71)**Name of Applicant :**
1)SHILPA MEDICARE LIMITED
Address of Applicant :SHILPA MEDICARE LIMITED 2nd Floor, 10/80, Rajendra Gunj, RAICHUR, KARNATAKA, India Karnataka India
(72)**Name of Inventor :**
1)VENKATA NARAYANA KURELLA
2)SRIDHAR RUDRAVARAPU
3)CHATURVEDI; AKSHAY KANT

(57) Abstract :
ABSTRACT The Present invention provides the orally administrable, disintegrating film dosage forms comprising fingolimod or pharmaceutically acceptable salts or solvates thereof.

No. of Pages : 19 No. of Claims : 8

(12) PATENT APPLICATION PUBLICATION
(21) Application No.3566/CHE/2015 A
(19) INDIA
(22) Date of filing of Application :13/07/2015
(43) Publication Date : 20/01/2017

(54) Title of the invention : A WHEEL-LESS ROVER FOR EXPLORING PLANETS

(51) International classification :B66F
(31) Priority Document No :NA
(32) Priority Date :NA
(33) Name of priority country :NA
(86) International Application No :NA
Filing Date :NA
(87) International Publication No : NA
(61) Patent of Addition to Application Number :NA
Filing Date :NA
(62) Divisional to Application Number :NA
Filing Date :NA

(71)**Name of Applicant :**
1)PINTO PIUS A.J.
Address of Applicant :KAY15-10-540, KADRI, MALLIKATTA, MANGALORE - 575 002, Karnataka India
(72)**Name of Inventor :**
1)PINTO PIUS A.J.

(57) Abstract :
A device that is useful in exploring planets like Mars and the Moon, which moves without the use of Wheels or Tracks, and is able to cross vertical and horizontal barriers. It is also of use in investigating disaster areas and industrial plants as it can move over debris.

No. of Pages : 6 No. of Claims : 8

(12) PATENT APPLICATION PUBLICATION
(19) INDIA
(22) Date of filing of Application :17/07/2015
(21) Application No.3656/CHE/2015 A
(43) Publication Date : 20/01/2017

(54) Title of the invention : COMMUNICATION SYSTEM AND METHOD FOR ACHIEVING LOW PEAK-TO-AVERAGE POWER RATIO

(51) International classification	:H04L	
(31) Priority Document No	:NA	
(32) Priority Date	:NA	
(33) Name of priority country	:NA	
(86) International Application No	:NA	
Filing Date	:NA	
(87) International Publication No	: NA	
(61) Patent of Addition to Application Number	:NA	
Filing Date	:NA	
(62) Divisional to Application Number	:NA	
Filing Date	:NA	

(71)**Name of Applicant :**
1)Tejas Networks Ltd.
Address of Applicant :Plot No. 25, JP Software Park, Electronics City, Phase-1, Hosur Road, Bangalore - 560 100, Karnataka, India. Karnataka India
(72)**Name of Inventor :**
1)MADAIAH, Vinod Kumar
2)ARALIKATTI, Rohith C

(57) Abstract :
The present disclosure pertains to communication systems and methods for achieving low peak to average power ratio (PAPR) for transmitted symbols of wireless devices. In an aspect, the present disclosure relates to a transmitter of a communication system, wherein the transmitter includes a circular convolution module that is configured to circularly convolve a preset number of values with a group of M symbols from a total number of symbols, an M-point DFT module that is configured to process output of the circular convolution to generate a first set of discrete Fourier transform (DFT) samples, and an N-point IDFT module that is configured to process the first set of DFT samples to obtain a first set of inverse discrete Fourier transform (IDFT) samples for onward transmission to a receiver.

No. of Pages : 38 No. of Claims : 15

(12) PATENT APPLICATION PUBLICATION
(19) INDIA
(22) Date of filing of Application :17/07/2015
(21) Application No.3657/CHE/2015 A
(43) Publication Date : 20/01/2017

(54) Title of the invention : SYSTEM AND METHOD OF INFORMATION RETRIEVAL •

(51) International classification	:G06F 17/00
(31) Priority Document No	:NA
(32) Priority Date	:NA
(33) Name of priority country	:NA
(86) International Applicat on No	:NA
Filing Date	:NA
(87) International Publication No	: NA
(61) Patent of Addition to Application Number	:NA
Filing Date	:NA
(62) Divisional to Application Number	:NA
Filing Date	:NA

(71)**Name of Applicant :**
1)Accretive wiz@work Consultants Private Limited
Address of Applicant :29/4, Race Course Road, 6th Floor, Trade Centre, Bangalore - 560001 Karnataka India
(72)**Name of Inventor :**
1)Badrinath N R
2)Vishnu Bagri
3)Sushanta Pradhan

(57) Abstract :
ABSTRACT A SYSTEM AND METHOD OF INFORMATION RETRIEVAL Embodiments of the present invention relates to a system and method of information retrieval. Embodiments further encompasses an information retrieval method based on domain ontology and graph based indexing, the method comprising steps of: inputting a search query by a user; reading a graph index from an OWL database; expanding the search query based on the reading of the graph index; selecting the at least one algorithm based on the expanded search query; executing the at least one selected algorithm for extracting at least one content from a content store; calculating a relevancy score based on execution of the at least one selected algorithm; sorting and exhibiting a set of results based on the relevancy score; and fetching the at least one content from the content store.

No. of Pages : 37 No. of Claims : 11

(12) PATENT APPLICATION PUBLICATION
(19) INDIA
(22) Date of filing of Application :17/07/2015
(21) Application No.3662/CHE/2015 A
(43) Publication Date : 20/01/2017

(54) Title of the invention : SYSTEMS AND METHODS FOR IMPROVED WIND POWER GENERATION

(51) International classification :G06F
(31) Priority Document No :NA
(32) Priority Date :NA
(33) Name of priority country :NA
(86) International Application No :NA
Filing Date :NA
(87) International Publication No : NA
(61) Patent of Addition to Application Number :NA
Filing Date :NA
(62) Divisional to Application Number :NA
Filing Date :NA

(71)**Name of Applicant :**
1)General Electric Company
Address of Applicant :1 River Road, Schenectady, New York 12345, USA U.S.A.
(72)**Name of Inventor :**
1)SWAMINATHAN, KRISHNA KUMAR
2)SAGI, DEEPAK RAJ
3)JAIN, PRITESH
4)DASARATHA, SRIDHAR
5)BHASKAR, NITIKA
6)SRIVASTAVA, RAHUL KUMAR
7)GOGAD, MILESH SHRICHANDRA

(57) Abstract :
A wind power generation system includes one or both of a memory or storage device storing one or more processor-executable executable routines, and one or more processors configured to execute the one or more executable routines which, when executed, cause acts to be performed. The acts include receiving weather data, wind turbine system data, or a combination thereof; transforming the weather data, the wind turbine system data, or the combination thereof, into a data subset, wherein the data subset comprises a first time period data; selecting one or more wind power system models from a plurality of models; transforming the one or more wind power system models into one or more trained models at least partially based on the data subset; and executing the one or more trained models to derive a forecast, wherein the forecast comprises a predicted electrical power production for the wind power system.

No. of Pages : 30 No. of Claims : 20

(12) PATENT APPLICATION PUBLICATION
(21) Application No.3663/CHE/2015 A
(19) INDIA
(22) Date of filing of Application :17/07/2015
(43) Publication Date : 20/01/2017

(54) Title of the invention : CASCADED AIR FOIL THRUST BEARING

(51) International classification :F16C
(31) Priority Document No :NA
(32) Priority Date :NA
(33) Name of priority country :NA
(86) International Application No :NA
Filing Date :NA
(87) International Publication No : NA
(61) Patent of Addition to Application Number :NA
Filing Date :NA
(62) Divisional to Application Number :NA
Filing Date :NA

(71)**Name of Applicant :**
1)BMS College of Engineering
Address of Applicant :PB NO.1908, Bull Temple road, Bangalore, Karnataka 560019 Karnataka India
(72)**Name of Inventor :**
1)Ravikumar R N
2)Dr.Rathanraj K J
3)Dr.ArunKumar.V

(57) Abstract :
In one aspect, a cascaded air foil thrust bearing is disclosed. The thrust bearing comprises parent foils placed circumferentially on a thrust bearing. A set of daughter foils is provided for each top parent foil. Each daughter foil is of a different length with respect to other, and the daughter foils are placed in cascading order and in such a way that the gap along the radial direction between the foils and the runner being the same. This arrangement allows for creating of respective plurality of wedge films with the uniform gap between the foils and the runner all along the radial direction.

No. of Pages : 13 No. of Claims : 8

(12) PATENT APPLICATION PUBLICATION
(21) Application No.201634023558 A
(19) INDIA
(22) Date of filing of Application :09/07/2016
(43) Publication Date : 20/01/2017

(54) Title of the invention : APPLICATION MANAGEMENT SYSTEM AND METHOD INTERWORKING CIRCUIT NETWORK AND PACKET NETWORK

(51) International classification	:H04W 92/00
(31) Priority Document No	:10-2015-0100546
(32) Priority Date	:15/07/2015
(33) Name of priority country	:Republic of Korea
(86) International Application No	:NA
Filing Date	:NA
(87) International Publication No	: NA
(61) Patent of Addition to Application Number	:NA
Filing Date	:NA
(62) Divisional to Application Number	:NA
Filing Date	:NA

(71)**Name of Applicant :**
1)BALANCEHERO CO., LTD.
Address of Applicant :(MYEONGU BUILDING, YEOKSAM-DONG), 6F, 169 YEOKSAM-RO, GANGNAM-GU, SEOUL, REPUBLIC OF KOREA
(72)**Name of Inventor :**
1)LEE, Cheol Won

(57) Abstract :
Provided are an application management system and method interworking a circuit network and a packet network. The application management method includes collecting identity (ID) information including a terminal ID, a SIM card ID, and an application ID from the application installed on the terminal, creating user accounts by mapping ID information including identical pieces of information in ID information collected from a plurality of terminals, and storing the user accounts, authenticating ID information mapped to one user account belongs to an identical userforming a data session with a terminal having an application installed therein through the packet network, forming a data session with a terminal having an application installed therein through the packet network, checking a mobile communications service to which a subscriber identity module (SIM) card mounted onto the terminal subscribes when the data session with the terminal is disconnected, and transmitting update information of the application to the terminal by using the circuit network of a mobile communications system providing the mobile communications service.

No. of Pages : 31 No. of Claims : 8

(12) PATENT APPLICATION PUBLICATION
(21) Application No.201634023559 A
(19) INDIA
(22) Date of filing of Application :09/07/2016
(43) Publication Date : 20/01/2017

(54) Title of the invention : APPLICATION USER AUTHENTICATION SYSTEM AND METHOD

(51) International classification	:H04L 9/00
(31) Priority Document No	:10-2015-0100545
(32) Priority Date	:15/07/2015
(33) Name of priority country	:Republic of Korea
(86) International Application No	:NA
Filing Date	:NA
(87) International Publication No	: NA
(61) Patent of Addition to Application Number	:NA
Filing Date	:NA
(62) Divisional to Application Number	:NA
Filing Date	:NA

(71)**Name of Applicant :**
1)BALANCEHERO CO., LTD.
Address of Applicant :(MYEONGU BUILDING, YEOKSAM-DONG) 6F, 169, YEOKSAM-RO, GANGNAM-GU, SEOUL, REPUBLIC OF KOREA
(72)**Name of Inventor :**
1)LEE, Cheol Won

(57) Abstract :
Provided is an application user authentication method including receiving a first application identity (ID), a first terminal ID, and a first subscriber identity module (SIM) card ID from a first application installed in a first terminal, creating a first user account by mapping the first terminal ID, the first SIM card ID, and the first application ID, storing the first user account in a database, receiving a second application ID, a second terminal ID, and a second SIM card ID from a second application installed in a second terminal, and integrating the second application ID, the second terminal ID, and the second SIM card ID with the first user account and storing the first user account in the database when at least one of the second application ID, the second terminal ID, and the second SIM card ID is included in the first user account, wherein, when the first SIM card ID and the second SIM card ID are identical, the first user account includes the first terminal ID, the second terminal ID, the first SIM card ID, the first application ID, and the second application ID.

No. of Pages : 35 No. of Claims : 16

(12) PATENT APPLICATION PUBLICATION
(19) INDIA
(22) Date of filing of Application :12/07/2016
(21) Application No.201634023854 A
(43) Publication Date : 20/01/2017

(54) Title of the invention : MACHINE AND METHOD FOR CRIMPING A SHOE UPPER

(51) International classification :D02G 1/00
(31) Priority Document No :102015000034133
(32) Priority Date :14/07/2015
(33) Name of priority country :Italy
(86) International Application No :NA
Filing Date :NA
(87) International Publication No : NA
(61) Patent of Addition to Application Number :NA
Filing Date :NA
(62) Divisional to Application Number :NA
Filing Date :NA

(71)**Name of Applicant :**
1)ELETTROTECNICA B.C. S.P.A.
Address of Applicant :42 VIA INDIPENDENZA, VIGEVANO 27029, ITALY
(72)**Name of Inventor :**
1)COTTINO, Francesco

(57) Abstract :
Method for crimping, in a controlled way, the front portion of a shoe upper by means of a crimping machine of the type comprising two supporting plate-shaped jaws to support the upper, a shaping knife translatable, in a controlled way, with reciprocating motion between an engaged position within a passage slot between the two jaws and a position substantially disengaged from said slot, and wherein these two jaws are movable along an approach direction that is substantially orthogonal to the passage slot, between a close position and a position of mutual removal, and an activating and retaining device to activate and retain at least one of the two jaws in a predefined position, and wherein such an activating and retaining device comprises means to vary instant-by-instant, in a controlled way, the position of at least part of one of the two jaws and/or the retaining force acting on it. The method comprises the steps of: arranging the upper on the top portion of the two plate-shaped jaws, moving closer the two jaws one to another to a position in which a predefined passage slot is obtained; translating the shaping knife progressively engaging within the passage slot, to drag the upper inside such a passage slot defined between the two jaws; and varying instant-by-instant, in a controlled way, the position of at least part of one of the two jaws and/or the retaining force acting on it, during the step of c) translating the shaping knife progressively engaging within the passage slot. Fig. 6 Proportional

No. of Pages : 25 No. of Claims : 16

(12) PATENT APPLICATION PUBLICATION
(21) Application No.752/KOL/2015 A
(19) INDIA
(22) Date of filing of Application :13/07/2015
(43) Publication Date : 20/01/2017

(54) Title of the invention : UNRESERVED TICKET BOOKING SYSTEM (URTBS 1.0) - A SMS BASED FRAMEWORK FOR BOOKING AND CANCELLATION OF UNRESERVED RAILWAY OR BUS TICKETS WITH PAYMENT THROUGH MOBILE MONEY OR BANK ACCOUNTS

(51) International classification :G06Q10/02
(31) Priority Document No :NA
(32) Priority Date :NA
(33) Name of priority country :NA
(86) International Application No :NA
Filing Date :NA
(87) International Publication No : NA
(61) Patent of Addition to Application Number :NA
Filing Date :NA
(62) Divisional to Application Number :NA
Filing Date :NA

(71)**Name of Applicant :**
1)MS. PUSHPA AGARWAL
Address of Applicant :FLAT NO. 3A, 11B VARDHAMAN ROAD, BOUGAINVILLA, KOLKATA - 700027 West Bengal India
(72)**Name of Inventor :**
1)MS. PUSHPA AGARWAL

(57) Abstract :
UnReserved Ticket Booking System (URTBS 1.0) - A SMS based framework for booking and cancellation of unreserved railway or bus tickets with payment through mobile money or bank accounts ABSTRACT The present invention relates to an innovative technology solution for purchasing or cancelling unreserved tickets in Indian Railways or State Roadways or any other transport provider using mobile telephony services of SMS, USSD or IVR and utilizing mobile network operator money account facility or passenger bank account, for payment of travel fares. URTBS leverages the enormous subscriber base of mobile network operators in India to make the process of purchase or cancellation of rail or bus tickets, easier for passengers.

No. of Pages : 48 No. of Claims : 14

(12) PATENT APPLICATION PUBLICATION
(19) INDIA
(22) Date of filing of Application :13/07/2015
(21) Application No.755/KOL/2015 A
(43) Publication Date : 20/01/2017

(54) Title of the invention : AUTOMOTIVE VEHICLE HAVING AN OPEN ROOF WITH A RIGIDIFYING ELEMENT

(51) International classification :B60L11/02
(31) Priority Document No :NA
(32) Priority Date :NA
(33) Name of priority country :NA
(86) International Application No :NA
Filing Date :NA
(87) International Publication No : NA
(61) Patent of Addition to Application Number :NA
Filing Date :NA
(62) Divisional to Application Number :NA
Filing Date :NA

(71)**Name of Applicant :**
1)RENAULT S.A.S
Address of Applicant :13-15 QUAI ALPHONSE LE GALLO, 92100 BOULOGNE BILLANCOURT FRANCE
(72)**Name of Inventor :**
1)LEFEBVRE BENJAMIN
2)REDDY-VANGOORI VENKAT

(57) Abstract :
Automotive vehicle having a body (1) with an open roof arrangement, comprising an open roof supporting frame (3) with a rear crossbar (4), said rear crossbar (4) being attached on each of its two lateral ends (10, 11) to the vehicle body side (8, 9). Rigidifying elements (16) extend between the lateral ends (10, 11) of the rear crossbar (4) and the lateral sides (8, 9) of the vehicle body (1).

No. of Pages : 14 No. of Claims : 10

(12) PATENT APPLICATION PUBLICATION
(21) Application No.756/KOL/2009 A
(19) INDIA
(22) Date of filing of Application :18/05/2009
(43) Publication Date : 20/01/2017

(54) Title of the invention : PEDAL AND CHAIN OPERATED RICKSHAW OR TROLLEY WITH REAR AXLE BRAKE AND SHOCK-ABSORBING SADDLE HAVING TELESCOPIC SEAT SUSPENSION

(51) International classification	:B62K21/00	(71)**Name of Applicant :**
(31) Priority Document No	:NA	**1)CHURAMONI SEN**
(32) Priority Date	:NA	Address of Applicant :76/A/B, SHIBTALA STREET
(33) Name of priority country	:NA	UTTARPARA - 712258 DIST. HOOGHLY West Bengal India
(86) International Application No	:NA	(72)**Name of Inventor :**
Filing Date	:NA	**1)CHURAMONI SEN**
(87) International Publication No	: NA	
(61) Patent of Addition to Application Number	:NA	
Filing Date	:NA	
(62) Divisional to Application Number	:NA	
Filing Date	:NA	

(57) Abstract :
A pedal and chain operated rickshaw/trolley with rear axle brake and shock absorbing saddle having telescopic seat suspension, wherein the rear axle brake comprises of - Hanger bracket assembly (C1); - gripping device (J); - sliding lever assembly (P) and - link lever assembly (V) connected to operating linkage (U); and wherein the telescopic seat suspension comprises of - seat mounting rod (B1); - coil spring (C1) and - ball bearing (M1) for smooth sliding of the seat mounting rod (B1), characterized in that the rear axle brake exerts braking action on the rear axle, to which both the rear wheels are attached, and in that the telescopic seat suspension allows vertical movement of the saddle to absorb the shocks during movement of the rickshaw/trolley.

No. of Pages : 19 No. of Claims : 7

(12) PATENT APPLICATION PUBLICATION
(21) Application No.825/KOL/2009 A
(19) INDIA
(22) Date of filing of Application :03/06/2009
(43) Publication Date : 20/01/2017

(54) Title of the invention : MULTI LEVEL ELECTRICALLY OPERATED AUTOMATIC PARKING SYSTEM FOR PASSENGER CARS AND TWO WHEELERS

(51) International classification :E04H6/18
(31) Priority Document No :NA
(32) Priority Date :NA
(33) Name of priority country :NA
(86) International Application No :NA
Filing Date :NA
(87) International Publication No : NA
(61) Patent of Addition to Application Number :NA
Filing Date :NA
(62) Divisional to Application Number :NA
Filing Date :NA

(71)**Name of Applicant :**
1)RAGHAV DAS MUNDHRA
Address of Applicant :19, NELLIE SENGUPTA SARANI KOLKATA 700087 West Bengal India
(72)**Name of Inventor :**
1)RAGHAV DAS MUNDHRA

(57) Abstract :
A multi-level electrically operated automatic parking system for passenger cars and two-wheelers is disclosed. It contains the following main components - an entry I exit lobby (EEL) provided with a barrier gate, - a plurality of pallets (3.0), - pop-up carrier (4.0) mounted on lift platform (LP), - a plurality of lifts located in different zones for transportation in vertical direction, and - a plurality of carriers (5.0, 6.0) for transportation in the X and Y axes. The carriers are located on the different floors of the parking system. The parking or retrieval of the vehicles is fully automatic. The density of parked cars is in the range of 2 to 2.5 times of that in conventional parking.

No. of Pages : 27 No. of Claims : 9

(12) PATENT APPLICATION PUBLICATION
(21) Application No.201637001119 A
(19) INDIA
(22) Date of filing of Application :12/01/2016
(43) Publication Date : 20/01/2017

(54) Title of the invention : SMOKELESS INCINERATOR AND SYSTEM USING THE SAME

(51) International classification :F23G7/00
(31) Priority Document No :2015-141295
(32) Priority Date :15/07/2015
(33) Name of priority country :Japan
(86) International Application No :PCT/JP2015/070649
Filing Date :21/07/2015
(87) International Publication No : NA
(61) Patent of Addition to Application Number :NA
Filing Date :NA
(62) Divisional to Application Number :NA
Filing Date :NA

(71)**Name of Applicant :**
1)SEC ELEVATOR CO., LTD.
Address of Applicant :3-18-3 TAITO, TAITO-KU, TOKYO 1100016 JAPAN
(72)**Name of Inventor :**
1)SUZUKI TAKAO

(57) Abstract :
A smokeless incinerator arranged to completely burn unburned gas so as to inhibiting generation of black smoke without damaging a burner of combustion chamber even in sufficient burning. The incinerator contains a first combustion chamber A provided with a main combustor A1 into which wastes are thrown having firebrick walls A12 and an auxiliary burner A31 for supporting burning of the wastes, and a water cooling jacket A2 that is located above the main combustor Al and has water cooling jacket walls A27; a second combustion chamber B that is located on top of the first combustion chamber A and has a re-burning burner B1 for burning unburned gas; a filter-equipped combustion chamber C that is aligned with and adjacent to the second combustion chamber B and has a ceramic filter C1; a third combustion chamber D that is aligned with and adjacent to the filter-equipped combustion chamber C and has a dust collection cyclone D3; a fourth combustion chamber E that is located on top of the third combustion chamber D and has a re-burning burner E1 for burning unburned gas; and an exhaust stack F that is located on top of the fourth combustion chamber E and has a unit of forced exhaust (F2, F5).

No. of Pages : 29 No. of Claims : 10

(12) PATENT APPLICATION PUBLICATION
(21) Application No.201634022783 A
(19) INDIA
(22) Date of filing of Application :01/07/2016
(43) Publication Date : 20/01/2017

(54) Title of the invention : ICE MAKER

(51) International classification	:F25C 5/00
(31) Priority Document No	:10-2015-0100681
(32) Priority Date	:15/07/2015
(33) Name of priority country	:Republic of Korea
(86) International Application No	:NA
Filing Date	:NA
(87) International Publication No	: NA
(61) Patent of Addition to Application Number	:NA
Filing Date	:NA
(62) Divisional to Application Number	:NA
Filing Date	:NA

(71)**Name of Applicant :**
1)LG ELECTRONICS INC.
Address of Applicant :128, YEOUI-DAERO, YEONGDEUNGPO-GU, SEOUL, 07336 REPUBLIC OF KOREA
(72)**Name of Inventor :**
1)Younghoon Ha

(57) Abstract :
An ice maker according to an embodiment of the present invention uses a synchronous motor without an additional control means for changing a rotating direction of an ice tray and changes the rotating direction of the ice tray when a rotating moment generated by further rotation is greater than a torque of the synchronous motor in a state where the ice tray is- restrained.

No. of Pages : 80 No. of Claims : 10

(12) PATENT APPLICATION PUBLICATION
(21) Application No.201638030436 A
(19) INDIA
(22) Date of filing of Application :06/09/2016
(43) Publication Date : 20/01/2017

(54) Title of the invention : WELDING MATERIAL AND WELDED JOINT STRUCTURE

(51) International classification :C22C29/00
(31) Priority Document No :2008-014522
(32) Priority Date :25/01/2008
(33) Name of priority country :Japan
(86) International Application No :PCT/JP2009/051041
Filing Date :23/01/2009
(87) International Publication No : NA
(61) Patent of Addition to Application Number :NA
Filing Date :NA
(62) Divisional to Application Number :2820/KOLNP/2010
Filed on :02/08/2010

(71)**Name of Applicant :**
1)Nippon Steel & Sumitomo Metal Corporation
Address of Applicant :6-1, Marunouchi 2-chome, Chiyoda-ku, Tokyo 100-8071, Japan
(72)**Name of Inventor :**
1)OSUKI, Takahiro
2)OGAWA, Kazuhiro
3)OKADA, Hirokazu

(57) Abstract :
A welding material, to be used for welding a base metal made of an austenitic alloy comprising C ≤ 2.0%, Si ≤ 4.0%, Mn: 0.01 to 3.0%, P: more than 0.03% to not more 0.3%, S ≤ 0.03%, Cr: 12 to 35%, Ni: 6 to 80%, sol. Al: 0.001 to 1% and N ≤ 0.3%, with the balance being Fe and impurities to a base metal made of another austenitic alloy, which comprises C: more than 0.3% to 3.0%, Si ≤ 4.0%, Mn ≤ 3.0%, P ≤ 0.03%, S ≤ 0.03%, Cr: more than 22% to 55%, Ni: more than 30% to not more than 70%, sol. Al: 0.001 to 1% and N ≤ 0.3%, with the balance being Fe and impurities can suppress the weld solidification cracking which occurs in an austenitic alloy having a high P content and showing fully austenitic solidification. Therefore, the said welding material can be widely used in such fields where a welding fabrication is required. The said welding material may contain a specific amount or amounts of one or more elements selected from Cu, Mo, W, V, Nb, Ti, Ta, Zr, Hf, Co, B, Ca, Mg and REM.

No. of Pages : 66 No. of Claims : 6

(12) PATENT APPLICATION PUBLICATION
(21) Application No.201638031916 A
(19) INDIA
(22) Date of filing of Application :19/09/2016
(43) Publication Date : 20/01/2017

(54) Title of the invention : A BASE STATION APPARATUS, A TRANSMISSION METHOD, A RECEIVING APPARATUS AND A RECEIVING METHOD

(51) International classification :G08C13/00
(31) Priority Document No :2005-174399
(32) Priority Date :14/06/2005
(33) Name of priority country :Japan
(86) International Application No :PCT/JP2006/311877
Filing Date :13/06/2006
(87) International Publication No : NA
(61) Patent of Addition to Application Number :NA
Filing Date :NA
(62) Divisional to Application Number :4865/KOLNP/2007
Filed on :13/12/2007

(71)**Name of Applicant :**
1)NTT DOCOMO, INC.
Address of Applicant :11-1, NAGATACHO 2-CHOME CHIYODA-KU, TOKYO Japan
(72)**Name of Inventor :**
1)HIGUCHI KENICHI
2)SAWAHASHI MAMORU

(57) Abstract :
A base station apparatus, a transmission method, a receiving apparatus and a receiving method A base station apparatus, wherein a plurality of bandwidths is defined for use in a communication system, each of said plurality of bandwidths having a common center frequency, the base station apparatus comprising means configured to transmit transmission data by using a bandwidth of the plurality of bandwidths in a band centered on the common center frequency; and means configured to transmit a control channel into a center band of a predetermined width having as center frequency the common center frequency of the bandwidth used for data transmission.

No. of Pages : 43 No. of Claims : 18

APPLICATION FOR RESTORATION OF LAPSED PATENT U/S 60 : PUBLICATION U/S 61(1) RULE 84(3)

Controller is *prima facie* satisfied that in following matter(s), the failure to pay the renewal fees was unintentional and that there has been no undue delay in the making of the application for restoration of lapsed paten in prescribed manner. Notice is hereby given that any person interested in opposing the application for restoration of following lapsed patent(s) at any time within two months from the date of this publication may give notice to the Controller of opposition thereto on either or both of the following grounds, that is to say,--

(a) That the failure to pay the renewal fees was not unintentional; or
(b) That there has been undue delay in the making of the application.

Statement of the applicant in Form-15 and other documents filed during prosecution may be referred from file records .This opposition notice is to be filed in Form-14 with prescribed fees given in The FIRST SCHEDULE (See rule 7) FEES (Entry no 21).

Patent Number (Patent Application Number)	Patentee	Title	Date of Cessation	Appropriate Office
242006 (787/DELNP/2006)	CULLEN, MARK	"TREATMENT OF CRUDE OIL FRACTIONS, FOSSIL FUELS, AND PRODUCTS THEREOF"	17/08/2015	DELHI

Publication Under Section 43(2) in Respect of the Grant

Following Patents have been granted and any person interested in opposing these patents under Section 25(2) may at any time within one year from the date of this issue, give notice to the Controller of Patents at the appropriate office, on the prescribed form-7 along with written statement and evidence, if any.

Serial Number	Patent Number	Application Number	Date of Application	Date of Priority	Title of Invention	Name of Patentee	Date of Publication of Abstract u/s 11(A)	Appropriate Office
1	279192	2056/MUM/2011	19/07/2011 16:11:33		PREPARATION AND USE OF OLIGOSACCHARIDE IMPRINTED MESOPOROUS SILICA	PURNIMA D. AMIN	18/11/2011	MUMBAI
2	279229	1861/MUM/2010	23/06/2010 16:14:16		TELMISARTAN AND HYDROCHLOROTHIAZIDE COMPOSITION	FDC LIMITED	27/07/2012	MUMBAI
3	279236	859/MUM/2012	27/03/2012 16:14:37		MANUFACTURING OF LIGHT WEIGHT FIBER CEMENT BUILDING BOARDS	EVEREST INDUSTRIES LIMITED	04/05/2012	MUMBAI
4	279252	772/MUMNP/2009	24/08/2007	16/11/2006	METHOD of CLEANING ENDOSCOPE AND WASHING MACHINE	KANNO Minoru	22/05/2009	MUMBAI
5	279267	1994/MUMNP/2009	02/05/2008	04/05/2007	SEALABLE, PEELABLE FILM	INNOVIA FILMS LIMITED	07/10/2011	MUMBAI
6	279270	2204/MUM/2011	03/08/2011 16:31:42		PREPARATION OF SUBSTITUTED 1H-IMIDAZO[4,5-C] QUINOLINE	INDOCO REMEDIES LIMITED	08/02/2013	MUMBAI
7	279272	842/MUM/2008	11/04/2008		MASTER CONTROLLER FOR BASE TRANS RECEIVING STATION	DOSHI SUNEET HASMUKHLAL	12/06/2009	MUMBAI
8	279275	1459/MUMNP/2009	23/01/2008	07/02/2007	PROCESS FOR MAKING PERSONAL WASHING BARS EXHIBITING ARTISAN CRAFTED APPEARANCE HAVING SURFACE INCLUSIONS	HINDUSTAN UNILEVER LIMITED	05/03/2010	MUMBAI
9	279313	273/MUM/2007	12/02/2007		A herbal therapeutic product for the prevention and treatment of retention of placenta in cattle and buffaloes	HARSHADBHAI PATEL	08/05/2009	MUMBAI
10	279360	1214/MUM/2005	30/09/2005		A RESETTING MECHANISM FOR TRIPPING DEVICES	LARSEN & TOUBRO LIMITED	15/06/2007	MUMBAI
11	279367	2318/MUMNP/2008	20/04/2007	20/04/2006	MEDIA ACCESS CONTROL FOR ULTRA-WIDE BAND COMMUNICATION	QUALCOMM INCORPORATED	27/02/2009	MUMBAI

Publication Under Section 43(2) in Respect of the Grant

Following Patents have been granted and any person interested in opposing these patents under Section 25(2) may at any time within one year from the date of this issue, give notice to the Controller of Patents at the appropriate office, on the prescribed form-7 along with written statement and evidence, if any.

Serial Number	Patent Number	Application Number	Date of Application	Date of Priority	Title of Invention	Name of Patentee	Date of Publication of Abstract u/s 11(A)	Appropriate Office
1	279182	2575/CHENP/2009	13/12/2007	14/12/2006	D1363 BT RADIATION CURABLE PRIMARY COATINGS ON OPTICAL FIBER	DSM IP ASSETS B.V.	02/04/2010	CHENNAI
2	279190	2869/CHE/2009	20/11/2009 17:34:57	21/11/2008	AN INTEGRATED PROCESS FOR THE PRODUCTION OF P-XYLENE	CHINA PETROLEUM & CHEMICAL CORPORATION,SHANGHAI RESEARCH INSTITUTE OF PETROCHEMICAL TECHNOLOGY SINOPEC	25/06/2010	CHENNAI
3	279198	406/CHENP/2009	19/07/2007	24/07/2006	METHOD OF REPLACING DISPERSION MEDIUM	MITSUBISHI GAS CHEMICAL COMPANY, INC.	05/06/2009	CHENNAI
4	279205	447/CHENP/2009	26/06/2006	26/06/2006	DEVICE FOR VACUUM TIGHT SOLDERING AN EVACUATED FLAT PANEL SOLAR COLLECTOR	SRB ENERGY RESEARCH SARL,EUROPEAN ORGANIZATION FOR NUCLEAR RESEARCH (CERN)	05/06/2009	CHENNAI
5	279206	1667/CHENP/2008	05/10/2006	05/10/2005	A CONTROLLED FLOW ADMINISTRATION SET	ACU RATE PTY LIMITED	26/12/2008	CHENNAI
6	279208	1851/CHE/2006	06/10/2006	07/10/2005	SELF-SUPPORTING TYRE FOR WHEELS FOR BICYCLES, MOTOR CYCLES AND THE LIKE	GARAVAGLIA, PIETRO	07/12/2007	CHENNAI
7	279213	1345/CHE/2009	08/06/2009		DOOR INTERLOCKING SYSTEM FOR AN ELECTRICAL SWITCHING APPARATUS	SCHNEIDER ELECTRIC INDUSTRIES SAS	16/03/2012	CHENNAI

8	279214	1866/CHE/2009	05/08/2009 16:03:36		HINGE ASSEMBLY FOR PROVIDING INTERMEDIATE STOP POSITIONS	SCHNEIDER ELECTRIC INDUSTRIES SAS	11/02/2011	CHENNAI
9	279215	6734/CHENP/2009	12/04/2008	16/05/2007	METHOD FOR OPERATING A STEAM TURBINE POWER PLANT AND ALSO DEVICE FOR GENERATING STEAM	RWE Power Aktiengesellschaft	05/03/2010	CHENNAI
10	279221	4213/CHENP/2008	23/02/2007	23/02/2006	GATE-COUPLED EPROM CELL FOR PRINTHEAD	HEWLETT-PACKARD DEVELOPMENT COMPANY, L.P.	13/03/2009	CHENNAI
11	279223	7404/CHENP/2009	18/06/2008	18/06/2007	Bromo-Phenyl substituted Thiazolyl Dihydropyrimidines and a method for preparing the same	SUNSHINE LAKE PHARMA CO., LTD.	09/04/2010	CHENNAI
12	279226	3167/CHENP/2007	13/01/2006	19/01/2005	VASCULAR PLUG HAVING COMPOSITE CONSTRUCTION	Cordis Corporation,	07/09/2007	CHENNAI
13	279227	4972/CHENP/2008	28/03/2007	28/03/2006	SELF-DESTROYING DISPOSABLE SYRINGE AND SELF-DESTROYING METHOD THEREOF	LI JIANQUAN	13/03/2009	CHENNAI
14	279230	3680/CHENP/2008	15/06/2006	18/01/2006	A TRANSMISSION SYSTEM AND A METHOD FOR CONTROL THEREOF	ABB TECHNOLOGY LTD.	13/03/2009	CHENNAI
15	279232	3876/CHENP/2008	15/01/2007	24/01/2006	LIGHT-EMITTING DEVICE	KONINKLIJKE PHILIPS N.V.	13/03/2009	CHENNAI
16	279239	2840/CHENP/2009	13/12/2007	20/12/2006	RETRANSMISSION SCHEME FOR LOSSY MEDIA	ALCATEL LUCENT	21/08/2009	CHENNAI
17	279254	1200/CHE/2008	16/05/2008 16:26:08	18/05/2007	CATIONIC ELECTRODEPOSITION PAINT COMPOSITIONS	KANSAI PAINT CO.,LTD	21/08/2009	CHENNAI
18	279259	5219/CHENP/2007	19/04/2006	19/04/2005	A DEVICE FOR PLANTING OF PLANT MATERIAL	PRECISION DRIP B.V	11/01/2008	CHENNAI

19	279261	5091/CHENP/2009	23/01/2008	31/01/2007	DEFINING A STRATUM-1 CONFIGURATION IN A COORDINATED TIMING NETWORK	INTERNATIONAL BUSINESS MACHINES CORPORATION	22/01/2010	CHENNAI
20	279266	2612/CHE/2010	07/09/2010 15:46:35		PROCESS FOR THE PREPARATION OF 5-BENZYLOXY-2- (4-BENZYLOXYPHENYL) - 3- METHYL-1H-INDOLE	DIVI'S LABORATORIES LTD.,	12/11/2010	CHENNAI
21	279269	3625/CHENP/2009	19/02/2008	28/02/2007	GATE DRIVE VOLTAGE SELECTION FOR A VOLTAGE REGULATOR	HEWLETT-PACKARD DEVELOPMENT COMPANY, L.P.	08/07/2016	CHENNAI
22	279271	6283/CHENP/2009	08/04/2008	13/04/2007	DIGITAL BROADCASTING SYSTEM AND DATA PROCESSING METHOD	LG ELECTRONICS INC.	15/01/2010	CHENNAI
23	279273	1822/CHE/2006	03/10/2006	03/10/2005	JPEG DETECTORS AND JPEG IMAGE HISTORY ESTIMATORS	XEROX CORPORATION	07/12/2007	CHENNAI
24	279276	4995/CHENP/2009	28/01/2008	29/01/2007	JOURNAL SEAL FOR ROLLING BEARINGS	SMS GROUP GMBH.	06/11/2009	CHENNAI
25	279280	1430/CHE/2006	10/08/2006		A PROCESS FOR PRODUCING HIGH DENSITY SINTERED SILICON CARBIDE	INDIAN SPACE RESEARCH ORGANISATION	15/02/2008	CHENNAI
26	279282	6384/CHENP/2009	31/03/2008	30/03/2007	WIRELESS COMMUNICATION-IMPROVING SHEET MEMBER, WIRELESS IC TAG, ANTENNA, AND WIRELESS COMMUNICATION SYSTEM USING THE SAME	NITTA CORPORATION	18/06/2010	CHENNAI
27	279283	3735/CHENP/2008	26/01/2007	27/01/2006	METHOD OF MANAGING USE OF CHANNELIZATION CODES DURING SOFT HANDOFF	LUCENT TECHNOLOGIES INC.	13/03/2009	CHENNAI
28	279284	2491/CHE/2006	29/12/2006		A METHOD OF PLMN SELECTION BY SIM CARD	SAMSUNG R& D INSTITUTE INDIA BANGALORE PRIVATE LIMITED	28/11/2008	CHENNAI

29	279285	2496/CHE/2006	29/12/2006 16:14:44		A METHOD OF KNOWING THE LOCATION OF A MOBILE STATION (MS) IN GSM/UMTS SYSTEMS USING CELL BROADCAST (CB)INFORMATION'	SAMSUNG R& D INSTITUTE INDIA BANGALORE PRIVATE LIMITED	28/11/2008	CHENNAI
30	279286	662/CHENP/2009	20/07/2007	20/07/2006	SPECIFYING A PARTICULAR ENUM SERVICE TYPE IN A COMMUNICATIONS NETWORK THAT UTILIZES A PLURALITY OF DIFFERENT ENUM SERVICE TYPES	TEKELEC, INC.	27/09/2013	CHENNAI
31	279288	547/CHE/2008	04/03/2008 15:11:03		MEMORY ROLL OVER TESTING METHOD AND DEVICE FOR LOAD SURVEY DATA IN ELECTRONIC TRIVECTOR METER	LARSEN & TOUBRO LIMITED	06/03/2009	CHENNAI
32	279291	1622/CHE/2009	09/07/2009 11:36:49	17/07/2008	A METHOD OF CELL RESELECTION IN A WIRELESS TELECOMMUNICATIONS DEVICE OPERATIVE WITH A PLURALITY OF RADIO ACCESS NETWORKS	Research In Motion Limited	13/07/2012	CHENNAI
33	279292	1248/CHENP/2008	27/09/2006	27/09/2005	SYSTEM, METHOD AND MAIL SERVER FOR FILTERING OUT SPAM MAIL	TENCENT TECHNOLOGY (SHENZHEN) COMPANY LIMITED	28/11/2008	CHENNAI
34	279293	2354/CHE/2006	19/12/2006		A METHOD OF PROVIDING SERVICE TO USERS IN IMS/VOIP NETWORK USING AN IMS/VOIP BASED	SAMSUNG R& D INSTITUTE INDIA BANGALORE PRIVATE LIMITED	28/11/2008	CHENNAI
35	279294	1680/CHE/2005	18/11/2005		AN IMPROVED PROCESS FOR THE PREPARATION OF SODIUM SALT OF CEPHALOSPORIN ANTIBIOTIC	ORCHID CHEMICALS&PHARMECEUTICALS LTD.,	12/10/2007	CHENNAI

36	279295	5387/CHENP/2009	06/02/2008	12/02/2007	METHOD OF FABRICATING A FIELD EFFECT TRANSISTOR HAVING A CHANNEL REGION IN A SEMICONDUCTOR-ON-INSULATOR SUBSTRATE •	INTERNATIONAL BUSINESS MACHINES CORPORATION,INTERNATIONAL BUSINESS MACHINES CORPORATION	25/06/2010	CHENNAI
37	279299	1189/CHE/2008	15/05/2008		SYSTEM AND METHOD FOR AUTOMATICALLY VERIFYING THE AUTHENTICITY OF SIGNATURES	NEWGEN SOFTWARE TECHNOLOGIES LIMITED,	22/05/2009	CHENNAI
38	279302	216/CHE/2007	31/01/2007		THREE PHASE VOLTAGE SENSING DEVICE FOR WATT-HOUR METER	LARSEN & TOUBRO LIMITED	28/11/2008	CHENNAI
39	279303	1474/CHE/2009	24/06/2009 11:15:27		COMPACT AUTO FLOW CONTROL WATER TAP WITH MANUAL FUNCTION	CHUNDAKATTIL THANKACHAN SOMAN	16/10/2009	CHENNAI
40	279304	1121/CHE/2007	29/05/2007		AN IMPROVED PROCESS FOR PREPARATION OF ROSUVASTATIN CALCIUM	AUROBINDO PHARMA LIMITED	05/12/2008	CHENNAI
41	279306	959/CHE/2006	05/06/2006		A DEVICE PATIENT MONITOR AND CNS WITH FIBER OPTIC COMMUNICATION	SKANRAY HEALTHCARE PRIVATE LIMITED	25/01/2008	CHENNAI
42	279316	2864/CHE/2007	03/12/2007 11:59:17		IMPROVED PROCESS FOR THE PREPARATION OF (2E)-2-CYANO-3-(3,4-DIHYDROXY-5-NITROPHENYL)-N,N-DIETHYL-2-PROPENAMIDE POLYMORPHIC FORM A	NEULAND LABORATORIES LIMITED	11/09/2009	CHENNAI
43	279317	1643/CHE/2010	14/06/2010 14:07:14		PROCESS FOR THE PREPARING 7alpha- [9-(4,4,5,5,5-PENTAFLUOROPENTYL SULPHINYL) NONYL] OESTRA-1,3,5 (10)-TRIENE-3,17 beta-DIOL (FULVESTRANT)	GLAND PHARMA LTD	27/04/2012	CHENNAI

44	279324	526/CHE/2008	03/03/2008		AN IMPROVED PROCESS FOR THE PREPARATION OF APREPITANT	MSN LABORATORIES LIMITED	11/09/2009	CHENNAI
45	279331	5896/CHENP/2009	09/05/2008	17/05/2007	'COMMUNICATION TERMINAL	CANON KABUSHIKI KAISHA	25/12/2009	CHENNAI
46	279335	5415/CHENP/2008	10/04/2007	10/04/2006	SEALED PRODUCT DELIVERY UNIT WITH RUPTURING PUMP	POPPACK LLC	20/03/2009	CHENNAI
47	279346	4744/CHENP/2008	08/03/2007	10/03/2006	A METHOD OF REMOVING CARBON DIOXIDE FROM FLUID STREAM	C-QUEST TECHNOLOGIES INTERNATIONAL LLC	13/03/2009	CHENNAI
48	279350	1938/CHE/2007	30/08/2007		A GEAR SHIFTING DEVICE FOR A THREE WHEELED MOTOR VEHICLE	TVS MOTOR COMPANY LIMITED	17/02/2012	CHENNAI
49	279351	2396/CHE/2008	29/10/2008		TWO-STROKE INTERNAL COMBUSTION ENGINE	TVS MOTOR COMPANY LIMITED	18/11/2011	CHENNAI
50	279354	1755/CHENP/2008	05/10/2006	05/10/2005	REINFORCEMENT FOR DISH PLATE HEAT EXCHANGERS	DANA CANADA CORPORATION	26/12/2008	CHENNAI
51	279356	874/CHENP/2009	25/07/2007	18/08/2006	LOW VISCOSITY AQUEOUS HOT-CURE FLEXIBLE POLYURETHANE FOAM STABILIZER SOLUTION	Evonik Goldschmidt GmbH	29/05/2009	CHENNAI
52	279361	5862/CHENP/2008	25/04/2007	28/04/2006	PROCESS FOR THE PRODUCTION OF FUMED SILICA	CABOT CORPORATION	27/03/2009	CHENNAI
53	279366	788/CHENP/2008	15/08/2006	15/08/2005	SYSTEMS AND METHODS FOR PROVIDING AN IMPROVED TIMING CONVEYOR	LAITRAM, L.L.C	28/11/2008	CHENNAI
54	279376	504/CHE/2008	28/02/2008		CELLPHONE RING DETECTING DEVICE	TVS MOTOR COMPANY LIMITED	11/09/2009	CHENNAI

55	279383	1853/CHE/2007	20/08/2007		METHOD FOR HANDLING LATE ARRIVAL OF PACKET DATA UNIT AFTER RESET/RE-ESTABLISHMENT OF RADIO LINK CONTROL ENTITY IN A WIRELESS COMMUNICATION SYSTEM	SAMSUNG R&D INSTITUTE INDIA-BANGALORE PRIVATE LIMITED	04/06/2010	CHENNAI
56	279387	2643/CHE/2008	30/10/2008		A NEW DYE FOR APPLICATION IN DYE LASER AND NONLINEAR OPTICS AND AS A FLUORESCENCE LIFETIME STANDARD	INDIAN INSTITUTE OF TECHNOLOGY, MADRAS	07/05/2010	CHENNAI
57	279400	1391/CHENP/2010	13/08/2007	13/08/2007	GRANULE COATED WITH URETHANE RESIN	SUMITOMO CHEMICAL COMPANY, LIMITED	13/08/2010	CHENNAI
58	279403	128/CHENP/2010	10/07/2008	10/07/2007	METHODS AND APPARATUS FOR CONTROLLING INTERFERENCE TO BROADCAST SIGNALING IN A PEER TO PEER NETWORK	QUALCOMM INCORPORATED	11/06/2010	CHENNAI
59	279406	2784/CHE/2008	12/11/2008		AN ELECTROMAGNETIC DEVICE FOR IMPROVED THERMAL MANAGEMENT	SCHNEIDER ELECTRIC INDUSTRIES SAS	21/05/2010	CHENNAI
60	279407	4178/CHENP/2008	13/02/2007	17/02/2006	A METHOD OF CONTROLLING REVERSE LINK TRANSMISSION POWER IN A WIRELESS COMMUNICATION NETWORK.	LUCENT TECHNOLOGIES INC.	13/03/2009	CHENNAI
61	279412	5579/CHENP/2008	08/03/2007	22/03/2006	A COIL ARRANGEMENT FOR A MR SYSTEM	KONINKLIJKE PHILIPS ELECTRONICS N.V.	21/08/2009	CHENNAI

Publication Under Section 43(2) in Respect of the Grant

Following Patents have been granted and any person interested in opposing these patents under Section 25(2) may at any time within one year from the date of this issue, give notice to the Controller of Patents at the appropriate office, on the prescribed form-7 along with written statement and evidence, if any.

Serial Number	Patent Number	Application Number	Date of Application	Date of Priority	Title of Invention	Name of Patentee	Date of Publication of Abstract u/s 11(A)	Appropriate Office
1	279177	2554/KOLNP/2008	01/12/2005	01/12/2005	CALL HANDLING FOR IMS REGISTERED USER	TELEFONAKTIEBOLAGET LM ERICSSON (PUBL)	30/01/2009	KOLKATA
2	279180	1029/KOL/2009	31/07/2009	08/09/2008	EXHAUST GAS RETREATMENT DEVICE	EBERSPACHER EXHAUST TECHNOLOGY GMBH & CO. KG.	22/07/2011	KOLKATA
3	279195	1570/KOLNP/2009	06/11/2007	09/11/2006	METHOD OF MAKING A SECURE ELECTRIC OR ELECTRONIC CIRCUIT ELEMENT, ELEMENT OBTAINED AND SUPPORT INTEGRATING SAID ELEMENT	GEMALTO SA	29/05/2009	KOLKATA
4	279196	4182/KOLNP/2010	22/04/2009	30/04/2008	FUSED BICYCLIC PYRIMIDINE COMPOUNDS AS AURORA KINASE INHIBITORS	NATIONAL HEALTH RESEARCH INSTITUTES	31/12/2010	KOLKATA
5	279204	1304/KOLNP/2010	01/10/2008	01/10/2007	PROCESS FOR PREPARING R-GOSSYPOL L-PHENYLALANINOL DIENAMINE	ASCENTA THERAPEUTICS, INC.	30/07/2010	KOLKATA
6	279217	3387/KOLNP/2008	13/03/2007	24/03/2006	HERBICIDAL COMPOSITION	ISHIHARA SANGYO KAISHA, LTD.	13/02/2009	KOLKATA
7	279222	145/KOLNP/2010	15/08/2008	15/08/2007	SUPPORTING MULTIPLE WIRELESS COMMUNICATION PROTOCOLS IN A COMMON RADIO FRAME STRUCTURE	GOOGLE TECHNOLOGY HOLDINGS LLC	13/08/2010	KOLKATA
8	279224	4116/KOLNP/2008	26/04/2007	15/05/2006	METHOD AND APPARATUS FOR PROVIDING IN-BAND WIRELESS BACKHAUL	MOTOROLA, INC.	06/03/2009	KOLKATA
9	279225	2883/KOLNP/2009	02/02/2008	02/02/2007	METHOD, DEVICE AND SYSTEM FOR ESTABLISHING A BEARER FOR A GSM NETWORK	HUAWEI TECHNOLOGIES CO., LTD.	18/09/2009	KOLKATA
10	279233	71/KOLNP/2009	15/06/2007	17/07/2006	A MOBILE COMMUNICATION DEVICE AND METHOD FOR AUTOMATIC DISPLAY OF PREPAY INFORMATION	MOTOROLA MOBILITY, INC.	03/04/2009	KOLKATA

11	279234	1573/KOLNP/2010	04/09/2008	04/10/2007	CARBON BLACK, METHOD FOR THE PRODUCTION THEREOF	EVONIK DEGUSSA GMBH	17/09/2010	KOLKATA
12	279235	2227/KOLNP/2009	11/10/2007	27/12/2006	A METHOD FOR COMMUNICATION A WIRELESS COMMUNICATION TERMINAL	ALTAIR SEMICONDUCTOR LDT.	03/07/2009	KOLKATA
13	279238	1160/KOLNP/2010	22/09/2008	21/09/2007	DIGITAL BROADCASTING RECEIVER AND METHOD FOR CONTROLLING THE SAME	LG ELECTRONICS INC.	16/07/2010	KOLKATA
14	279240	2951/KOLNP/2007	28/02/2006	03/03/2005	A BOOK TYPE DOCUMENT IN PARTICULAR AN IDENTIFICATION DOCUMENT HAVING A HIGH DEGREE OF SECURITY AGAINST FORGERY WITH LOW PRODUCTION COST	BUNDESDRUCKEREI GMBH	19/10/2007	KOLKATA
15	279241	2000/KOLNP/2009	04/12/2007	04/12/2006	SELF PROPELLED CLEANING DEVICE FOR MARINE SEISMIC STREAMERS	PGS GEOPHYSICAL AS	19/06/2009	KOLKATA
16	279243	810/KOLNP/2010	10/08/2007	10/08/2007	METHOD FOR RANDOM ACCESS IN WIRELESS COMMUNICATION SYSTEM, WIRELESS COMMUNICATION SYSTEM, WIRELESS TERMINAL, AND BASE STATION UNIT	FUJITSU LIMITED	21/05/2010	KOLKATA
17	279248	1565/KOL/2008	10/09/2008 15:58:49	10/10/2007	AN EXHAUST MANIFOLD ASSEMBLY AND A METHOD OF COUPLING AN EXHAUST MANIFOLD TO AN ENGINE	GM GLOBAL TECHNOLOGY OPERATIONS, INC.	01/05/2009	KOLKATA
18	279265	581/KOL/2007	13/04/2007	24/04/2006	MEDICAL INSTRUMENT HANDLE AND MEDICAL INSTRUMENT HAVING A HANDLE	ETHICON ENDO-SURGERY, INC	02/11/2007	KOLKATA
19	279268	3897/KOLNP/2008	02/03/2007	03/03/2006	VIROSOME-LIKE VESICLES COMPRISING GP-41 DERIVED ANTIGENS	MYMETICS CORPORATION,INSTITUT NATIONAL DE LA SANTE ET DE LA RECHERCHE MEDICALE (INSERM),PEVION BIOTECH LTD.	27/02/2009	KOLKATA
20	279278	2252/KOLNP/2011	22/04/2009	16/12/2008	GALVANIZED STEEL SHEET AND METHOD FOR PRODUCING THE SAME	JFE STEEL CORPORATION	21/10/2011	KOLKATA
21	279281	4526/KOLNP/2009	19/10/2007	11/07/2007	RADIAL COUNTERFLOW VORTEX GAS SEPARATION AND SCRUBBING	MCCUTCHEN CO.	13/08/2010	KOLKATA
22	279287	366/KOLNP/2011	03/07/2009	09/07/2008	COATING SYSTEM, COATED WORKPIECE AND METHOD FOR MANUFACTURING THE SAME	OERLIKON TRADING AG, TRUEBBACH	25/11/2011	KOLKATA

23	279289	1534/KOLNP/2010	02/10/2008	04/10/2007	INTERLEAVING AND DEINTERLEAVING METHOD AND APPARATUS IN A MOBILE CUMMUNICATION SYSTEM	SAMSUNG ELECTRONICS CO., LTD.	25/11/2011	KOLKATA
24	279305	2267/KOLNP/2011	26/11/2009	12/12/2008	MEDICAMENT DELIVERY DEVICE	SHL GROUP AB	28/10/2011	KOLKATA
25	279314	370/KOL/2009	26/02/2009 15:58:36	14/03/2008	ION EXCHANGE CARTRIDGE FOR FUEL CELL APPLICATIONS	GM GLOBAL TECHNOLOGY OPERATIONS, INC.	18/09/2009	KOLKATA
26	279319	2012/KOLNP/2010	28/10/2008	02/11/2007	FILTRATION MEMBRANES	P2I LTD	25/11/2011	KOLKATA
27	279321	699/KOL/2007	07/05/2007 15:45:44	08/05/2006	ENDOSCOPIC TRANSLUMENAL SURGICAL SYSTEMS	ETHICON ENDO-SURGERY, INC	23/11/2007	KOLKATA
28	279323	2487/KOLNP/2010	20/01/2009	18/01/2008	NATURAL RUBBER LATEX HAVING REDUCED ALLERGENICITY AND METHOD OF MAKING	VYSTAR CORPORATION	24/09/2010	KOLKATA
29	279325	2690/KOLNP/2011	01/02/2010	18/02/2009	ULTRAVIOLET ABSORBER COMPOSITION WITH IMPROVED HEAT RESISTANCE AND SYNTHETIC RESIN COMPOSITION CONTAINING THE SAME	ADEKA CORPORATION	13/01/2012	KOLKATA
30	279326	1757/KOLNP/2009	16/10/2007	16/10/2006	VENTED VIAL ADAPTER WITH FILTER FOR AEROSOL RETENTION	CAREFUSION 303, INC.	12/06/2009	KOLKATA
31	279334	3596/KOLNP/2008	12/02/2007	28/02/2006	DISTRIBUTIVE SCOREBOARD SCHEDULING IN AN OUT-OF-ORDER PROCESSOR	ARM Finance Overseas Limited	20/02/2009	KOLKATA
32	279336	832/KOLNP/2010	03/09/2008	04/09/2007	FILTER ARRANGEMENT FOR CLEANING PROCESS GASES CONTAMINATED WITH PARTICLES, AND PROCESS FOR CLEANING FILTER UNITS OF SUCH A FILTER ARRANGEMENT	HTTLIN GMBH	06/08/2010	KOLKATA
33	279337	492/KOL/2005	10/06/2005		AN IMPROVED ROLLER CHAIN WITH PRESCRIBED PITCH FOR TRANSMITTING POWER OF A DRIVE SHAFT TO A DRIVEN SHAFT	DAIDO KOGYO CO. LTD,	29/12/2006	KOLKATA
34	279342	4167/KOLNP/2007	10/04/2006	08/04/2005	DRIVE FOR A VEHICLE, IN PARTICULAR A LORRY	DTI GROUP B.V.	15/02/2008	KOLKATA
35	279344	1813/KOLNP/2008	05/10/2006	05/10/2005	A COMBINATION APPARATUS FOR WEIGHING AN AIRCRAFT AND METHOD FOR WEIGHING AN AIRCRAFT APPLYING THE SAME	BELL HELICOPTER TEXTRON INC.	09/01/2009	KOLKATA

36	279348	4816/KOLNP/2007	30/05/2006	13/06/2005	APPARATUS FOR MOLDING FLASK-FREE UPPER CASTING MOLD AND LOWER CASTING MOLD	SINTOKOGIO, LTD.	27/06/2008	KOLKATA
37	279349	1181/KOL/2007	28/08/2007 15:13:27	15/09/2006	KEYBOARD APPARATUS FOR ELECTRONIC MUSICAL INSTRUMENT	YAMAHA CORPORATION	16/05/2008	KOLKATA
38	279352	1422/KOLNP/2007	16/11/2005	19/11/2004	MOTOR VEHICLE COMPRISING A STRUCTURE WITH A LOADING FLOOR	RENAULT S.A.S.	02/01/2009	KOLKATA
39	279353	310/KOL/2009	18/02/2009 15:44:54		A DEVICE FOR REAL TIME MEASUREMENT OF DISTORTION REMOTELY DURING AN ARC WELDING PROCESS.	BHARAT HEAVY ELECTRICALS LIMITED	27/08/2010	KOLKATA
40	279355	1655/KOL/2008	25/09/2008	01/11/2007	AN EIGHT SPEED TRANSMISSION	GM GLOBAL TECHNOLOGY OPERATIONS, INC.	05/06/2009	KOLKATA
41	279359	1537/KOL/2007	07/11/2007		EVAPORATION INDUCED LITHOGRAPHY	INDIAN INSTITUTE OF TECHNOLOGY	05/06/2009	KOLKATA
42	279362	4296/KOLNP/2009	25/04/2008	27/09/2007	METHOD AND SYSTEM FOR DIAGNOSING OPERATING STATES OF A PRODUCTION FACILITY	SINTOKOGIO, LTD.	16/04/2010	KOLKATA
43	279364	1349/KOLNP/2011	06/09/2009	04/09/2008	A SYSTEM AND METHOD FOR DESALINATION OF SEAWATER	I.D.E. TECHNOLOGIES LTD.	01/07/2011	KOLKATA
44	279368	831/KOLNP/2009	19/08/2007	11/09/2006	A SYSTEM AND METHOD FOR ENABLING VEHICLE OPERATOR TO RECORD SURROUNDING TRAFFIC ACTIVITY FOR RECORDING TRAFFIC LAW VIOLATION AND TRANSMISSION	IZAKOV, DORON	22/05/2009	KOLKATA
45	279374	3869/KOLNP/2009	11/07/2007	25/06/2007	METHOD FOR DISPLAYING INTERSECTION ENLARGEMENT IN NAVIGATION DEVICE	M & SOFT, INC.	19/02/2010	KOLKATA

CONTINUED TO PART- 2