EC2091E - ANALOG CIRCUITS LAB

MINI PROJECT

Metal Detector

Rashid Rahman – B241108EC

Richu Mathew Shaji – B241119EC

Rishal Mohammed – B240090EC

OBJECTIVE

To design and implement a metal detector system that can detect the presence of metal and differentiate between ferromagnetic and diamagnetic metals by analyzing changes in oscillator frequency, with the output processed into an audible signal for easy detection.

INTRODUCTION

Metal detection systems are widely used in industrial, security, and hobbyist applications. Conventional metal detectors can identify the presence of metal, but often cannot distinguish between different types of metals. This project implements a metal detector and differentiator that not only detects metals but also classifies them as ferromagnetic (e.g., iron, nickel, cobalt) or diamagnetic (e.g., copper, aluminium) using oscillator frequency shifts and signal processing. The system uses a ZVS oscillator and a Schmitt Trigger oscillator, whose frequency interaction is processed to generate audible signals.

CIRCUIT DIAGRAM

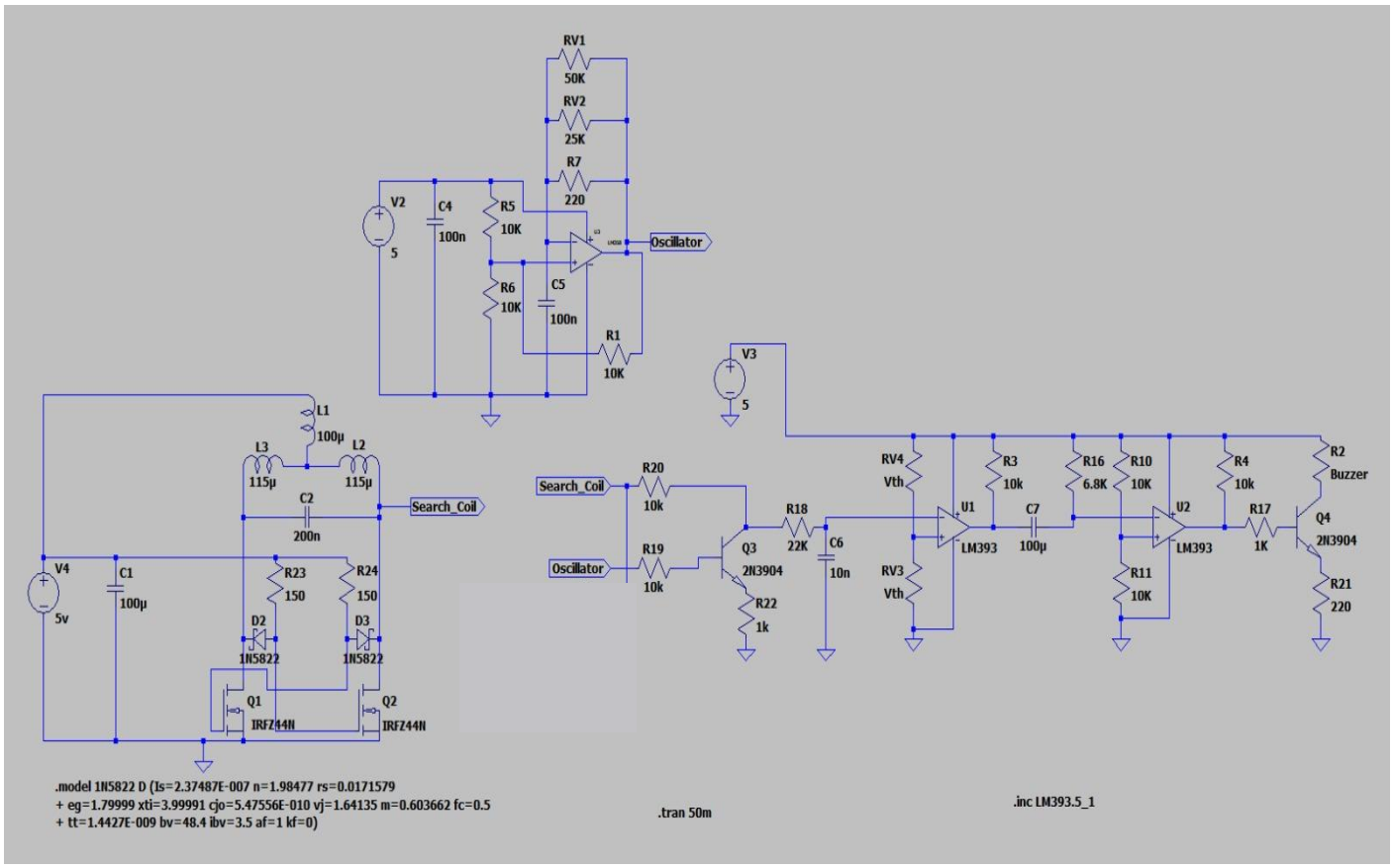

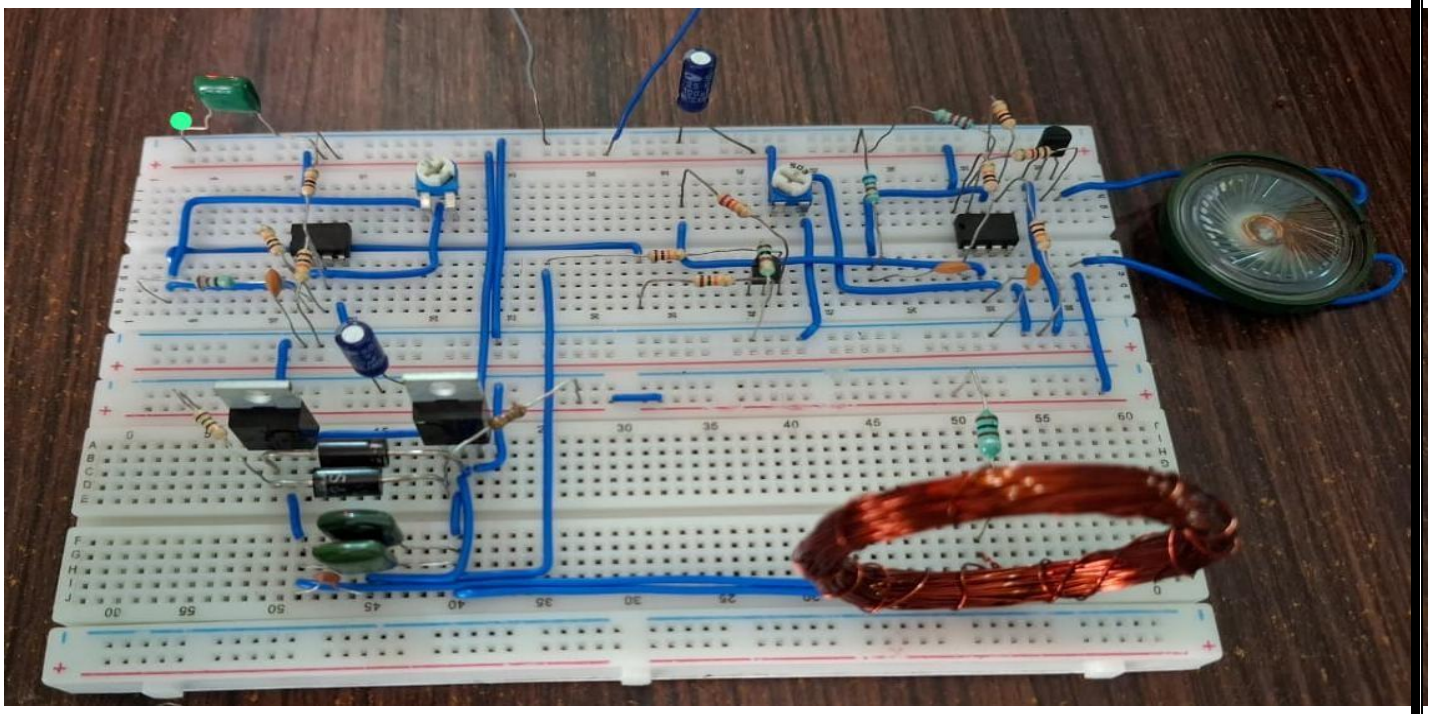

COMPONENTS USED

COMPONENT	*QUANTITY*	*DESCRIPTION*
55 KΩ	*1*	*Resistor*
25 KΩ	*1*	*Resistor*
220 Ω	*2*	*Resistor*
10 KΩ	*9*	*Resistor*
150 Ω	*2*	*Resistor*
6.8 KΩ	*1*	*Resistor*
22 KΩ	*1*	*Resistor*
1 KΩ	*1*	*Resistor*
100 NF	*2*	*Capacitor*
100 µF	*2*	*Capacitor*
200 NF	*1*	*Capacitor*
10 NF	*1*	*Capacitor*
100 µH	*1*	*Inductor*
315 µH	*1*	*Inductor (Search Coil)*
IN5822	*2*	*Schottky Diode*
IRFZ44	*2*	*N-channel MOSFET*
2N3904	*2*	*NPN Transistor*
LM358	*1*	*Op-Amp*
LM393	*2*	*Comparator*
SPEAKER	*1*	*Speaker*

GRAPH TRANSFORMATIONS

ZVS Oscillator

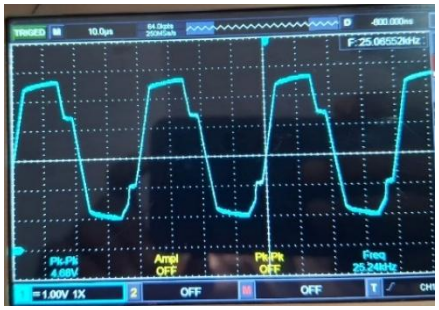

Schmitt trigger oscillator

After Multiplication and low pass filter

After Comparator

After High Pass Filter

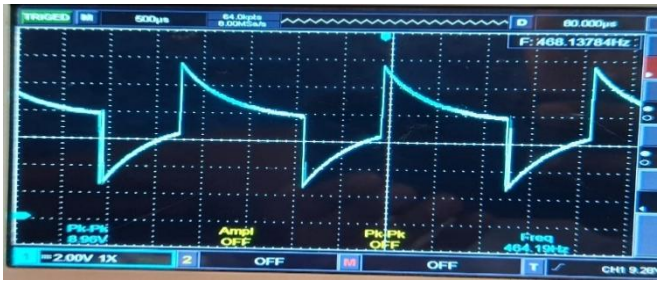

Final output After second comparator

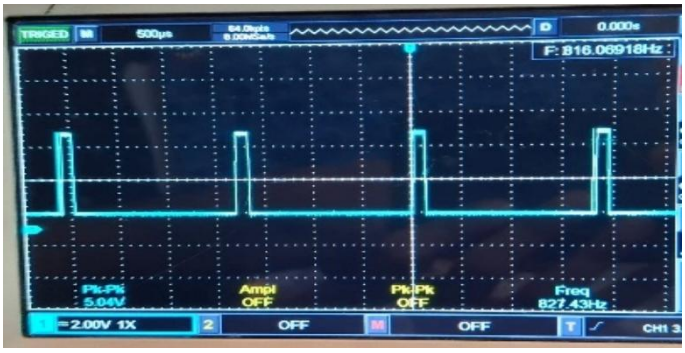

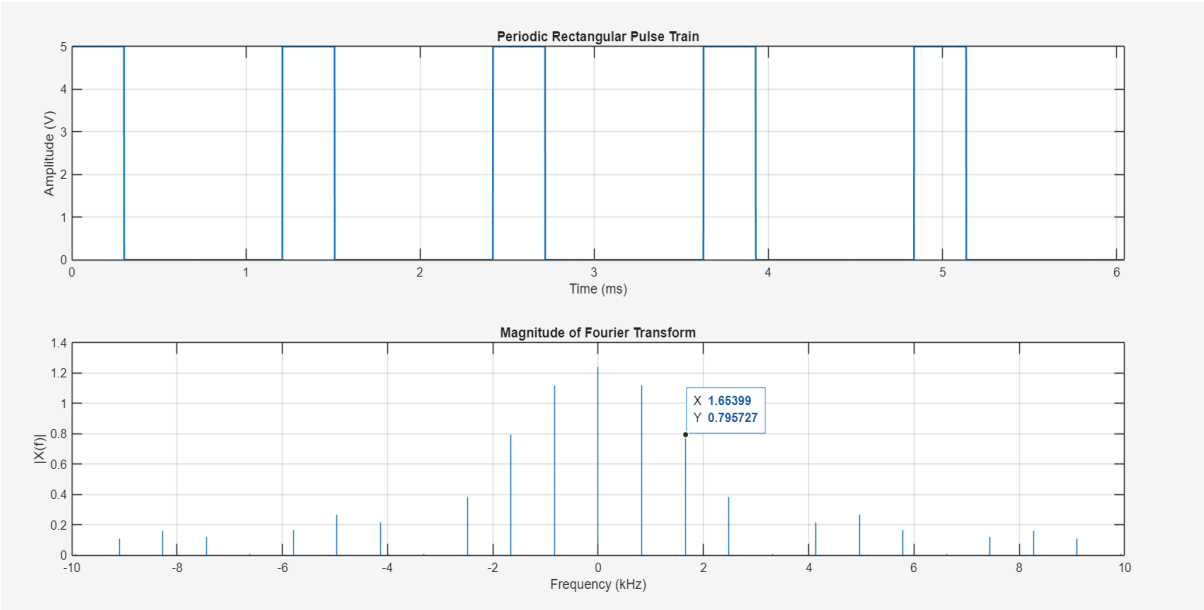

Fourier Transform of Output

CIRCUIT WORKING EXPLANATION

1)ZVS Oscillator:

The **Zero Voltage Switching (ZVS) oscillator** is used to generate a high-frequency sinusoidal signal for the metal detector's sensing coil.

Working Principle:

1. The ZVS oscillator produces a **sine wave** whose frequency is approximately:

$$f = \frac{1}{2\pi\sqrt{LC}}$$

where $L$and $C$are the inductance and capacitance in the LC tank circuit.

2. **MOSFET switching mechanism:**
   - Due to small mismatches between the MOSFETs, only one MOSFET turns on at a time, while the other remains off.
   - The MOSFET that is on charges the capacitor in the LC tank.
3. LC oscillation:
   - Once the capacitor is charged, the energy stored in the LC tank starts oscillating at the natural resonant frequency.

- The ends of the capacitor are connected to the gates of the MOSFETs. During voltage reversal of the capacitor, the opposite MOSFET gets triggered, allowing the oscillation to continue and sustain itself.

4. This self-sustaining feedback loop ensures a stable sinusoidal output at the desired frequency.

Design Parameters for this Project:

- Desired frequency: **25 kHz**
- Inductor: $L = 316\ \mu H$
- Capacitor: $C = 128.6\ nF$

<u>2)Schmitt Trigger Oscillator</u>

The Schmitt Trigger oscillator is used to generate a stable square wave for the signal processing stage in the metal detector.

Working Principle:

1. Frequency Determination:
   The frequency of the square wave is approximately:

$$f = \frac{1}{2RC\ln\left(\frac{1+B}{1-B}\right)}$$

where:

$$B = \frac{R_1}{R_1 + R_f}$$

- $R$and $C$are the resistor and capacitor in the timing network.
- $R_1$and $R_f$set the hysteresis of the Schmitt Trigger.

2. **Operation Cycle:**

- Initially, the capacitor is uncharged.
- The output of the Schmitt Trigger is high (5 V).
- The capacitor begins charging through the resistor until its voltage reaches the upper threshold ($V_{\mathrm{UT}} \approx 3.3$ V, determined by R_1, R_2, R_f).

- Once the inverting input voltage V_{-} exceeds the non-inverting input V_{+}, the output switches to low (0 V).
- The capacitor now discharges until it reaches the lower threshold ($V_{\mathrm{LT}} \approx 1.66$ V, determined by R_1, R_2, R_f).
- This charging-discharging cycle repeats continuously, producing a stable square wave output.

<u>3)Signal Processing</u>

The ZVS oscillator generates a half-sine wave at 25 kHz, while the Schmitt Trigger oscillator produces a square wave at 25 kHz (or slightly different for identification mode). A square wave is composed of many sinusoidal components:

- One component has the same frequency as the oscillator (f_1)
- The others are harmonics at multiples of f_1.

Multiplication of Signals:

- The half-sine wave from the ZVS oscillator is multiplied with the square wave from the Schmitt Trigger oscillator using a BJT (square wave applied at the base).
- Multiplying these signals produces sum and difference frequencies, generating an infinite set of new frequencies. For example, if F is the square wave frequency and f is the sine wave frequency:

$$\alpha \sin\left(2\pi(F-f)t\right) + \beta \sin\left(2\pi(F+f)t\right) + \gamma \sin\left(2\pi(2F-f)t\right) + \cdots$$

- A low-pass filter is used to isolate the difference frequency component $F - f$.

Effect of Metal on Frequencies:

- Initially, when both frequencies match, $F - f = 0$, and the output is zero.
- When a metal object is brought near the coil, the ZVS oscillator frequency shifts due to changes in coil impedance. This creates a non-zero frequency difference, producing a sinusoidal signal at $F - f$.
- Since this frequency difference is usually very low, it is inaudible to humans.

To make the signal audible, further signal processing is applied:

1. The difference signal is passed through a comparator, converting it into a sudden impulse-like waveform.A sudden impulse is composed of sinusoids of many different frequencies, spanning a very wide range. This includes frequencies within the audible range (20 Hz – 20 kHz).
2. A high-pass filter is applied to emphasize the sharp transitions.
3. The signal is passed through a second comparator to generate clean impulses.

4. Finally, the impulses drive a BJT, which in turn drives a speaker, producing an audible output.

4)Modes of Operation of device :

The device has two primary modes:

Mode 1: Metal Detection

- ZVS and Schmitt Trigger oscillators are initially set at 25 kHz.
- The multiplied signal output after the low-pass filter is zero.
- When a metal object is brought near, the ZVS oscillator frequency shifts, creating a non-zero frequency difference, which is processed to generate an audible sound in the speaker.

Mode 2: Object Identification / Differentiation

- ZVS oscillator is set at 25 kHz, Schmitt Trigger oscillator at 26 kHz.
- When a ferromagnetic metal (e.g., iron) is brought near, the ZVS frequency decreases, increasing the frequency difference. This results in a higher frequency sound from the speaker.
- When a diamagnetic metal (e.g., copper, aluminum) is brought near, the ZVS frequency increases, decreasing the frequency difference. This leads to a lower frequency sound, which may eventually disappear if the frequencies match.

Type of Material	Magnetic Behavior	Susceptibility (χ)	Effect on Magnetic Field / Domains	Retention of Magnetization	Effect on Coil Inductance (L)	Effect on Frequency ($f = 1 / 2\pi\sqrt{LC}$)	Examples
Ferromagnetic	Strong attraction to magnetic field	Large positive ($\chi \gg 1$)	Domains align strongly with field	Retains magnetization	Increases L (high μ)	Frequency decreases	Iron (Fe), Nickel (Ni), Cobalt (Co), Steel, Ferrites
Paramagnetic	Weak attraction to magnetic field	Small positive ($\chi > 0$)	No domain alignment	Does not retain magnetization	Slightly increases L	Slightly decreases frequency	Aluminum, Magnesium, Tungsten, Platinum, Titanium
Diamagnetic	Weak repulsion from magnetic field	Negative ($\chi < 0$)	Induces opposite magnetic field	Does not retain magnetization	Decreases L	Frequency increases	Copper, Silver, Gold, Bismuth, Graphite, Lead

APPLICATIONS

- Used in security screening to identify hidden metallic objects and distinguish ferromagnetic (dangerous) materials from non-ferromagnetic ones.
- Employed in industrial sorting to separate ferromagnetic metals in automated scrap-yard systems.
- Applied in underground detection of cables and pipes, as different metals cause distinct frequency shifts.
- Utilized by archaeologists to locate and differentiate buried metallic artifacts.

CONCLUSION

In this project, a metal detector and differentiator was designed and implemented using a ZVS oscillator and Schmitt Trigger oscillator. The system can detect the presence of metals and distinguish between ferromagnetic and diamagnetic metals by analyzing changes in oscillator frequency. Signal processing converts small frequency differences into audible impulses, making detection intuitive.

This approach demonstrates an effective and practical method for metal detection and classification, with potential applications in security, industry, archaeology, and education.

REFERENCES

[1] "Exactly How Schmitt Trigger Oscillators Work," All About Circuits, May 7, 2020. [Online]. Available: https://www.allaboutcircuits.com/technical-articles/exactly-how-schmitt-trigger-oscillators-work/. [Accessed: 10-Nov-2025].

ElectroBOOM, "DIY METAL DETECTOR, Gone Wrong and Right!!," YouTube, n.d. [Online]

Science by Sergio, "Everything about the ZVS driver," YouTube, n.d. [Online].

[1] Diodes Incorporated, "IN5822 Schottky Barrier Rectifier," Datasheet, [Online]. Available: https://www.diodes.com/assets/Datasheets/in5822.pdf. [Accessed: 10-Nov-2025].

[2] International Rectifier, "IRFZ44 N-Channel MOSFET," Datasheet, [Online]. Available: https://www.vishay.com/docs/91021/91021.pdf. [Accessed: 10-Nov-2025].

[3] ON Semiconductor, "2N3904 NPN Bipolar Transistor," Datasheet, [Online]. Available: https://www.onsemi.com/pdf/datasheet/2n3904-d.pdf. [Accessed: 10-Nov-2025].

[4] Texas Instruments, "LM358 Dual Operational Amplifier," Datasheet, [Online]. Available: https://www.ti.com/lit/ds/symlink/lm358.pdf. [Accessed: 10-Nov-2025].

[5] Texas Instruments, "LM393 Dual Comparator," Datasheet, [Online]. Available: https://www.ti.com/lit/ds/symlink/lm393.pdf. [Accessed: 10-Nov-2025].