NATIONAL INSTITUTE OF TECHNOLOGY, CALICUT

Department of Electronics and Communication Engineering

Monsoon 2024

EC1091E PRACTICAL ELECTRONICS

NIGHT LAMP WITH MOTION DETECTOR

SUBMITTED BY

RASHID RAHMAN T P (B241108EC)

RICHU MATHEW SHAJI (B241119EC)

RISHAL MOHAMMAD (B240090EC)

TABLE OF CONTENTS

Sl.No	Topic
1	Objective
2	Introduction
3	Component Description
4	Circuit Diagram
5	Circuit Board
6	Explanation Of Circuit
7	Advantages
8	Disadvantages
9	Application
10	Reference

OBJECTIVE

The objective is to create a night lamp with a motion sensor that activates when motion is detected and a timer to automatically turn off after a set duration.

INTRODUCTION

A night lamp with a motion sensor and timer is an innovative lighting solution designed to automatically turn on when motion is detected and turn off after a set time. This type of lamp provides convenience and energy efficiency, particularly useful for areas like hallways, bathrooms, or bedrooms, where the light only needs to be active when someone is present.

In this project A PIR sensor detects motion by sensing infrared radiation from moving objects (like a human body). When motion is detected, it triggers a 555 timer configured in monostable mode, which keeps the LED ON for a preset time (based on the timer's resistor and capacitor). After the time elapses, the 555 timer turns the LED off. This setup ensures the light only stays on when motion is detected and for a limited time.

COMPONENT DESCRIPTION:

ITEM	VALUE	QUANTITY
IC	555 Timer	1
PIR Sensor	HC-SR501	1
Relay	12v SPDT	1
Transistor	BC547	1
Transistor	2N3904	1
Potentiometer	B1Mohm	1
LED	5mm (Yellow)	1
Electrolytic Capacitor	470uf	1
Ceramic Disc Capacitor	0.01uf	1
Resistor	10Kohm	1
Resistor	1Kohm	2

CIRCUIT DIAGRAM

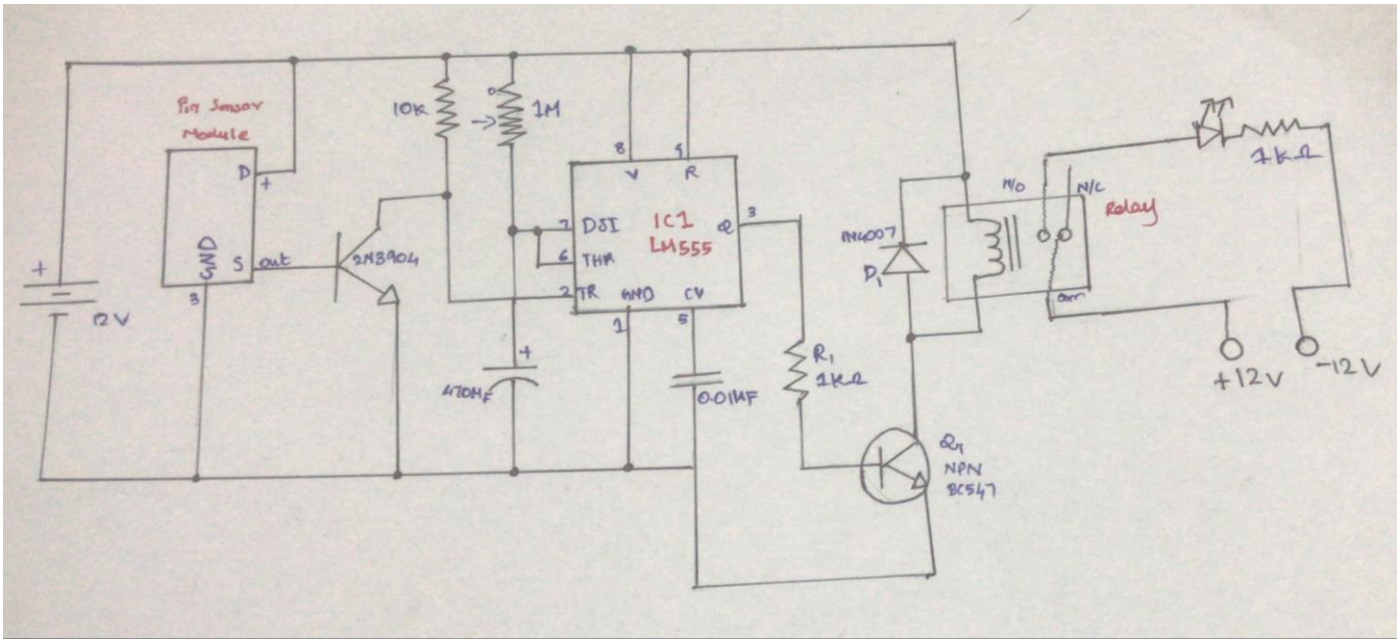

CIRCUIT BOARD

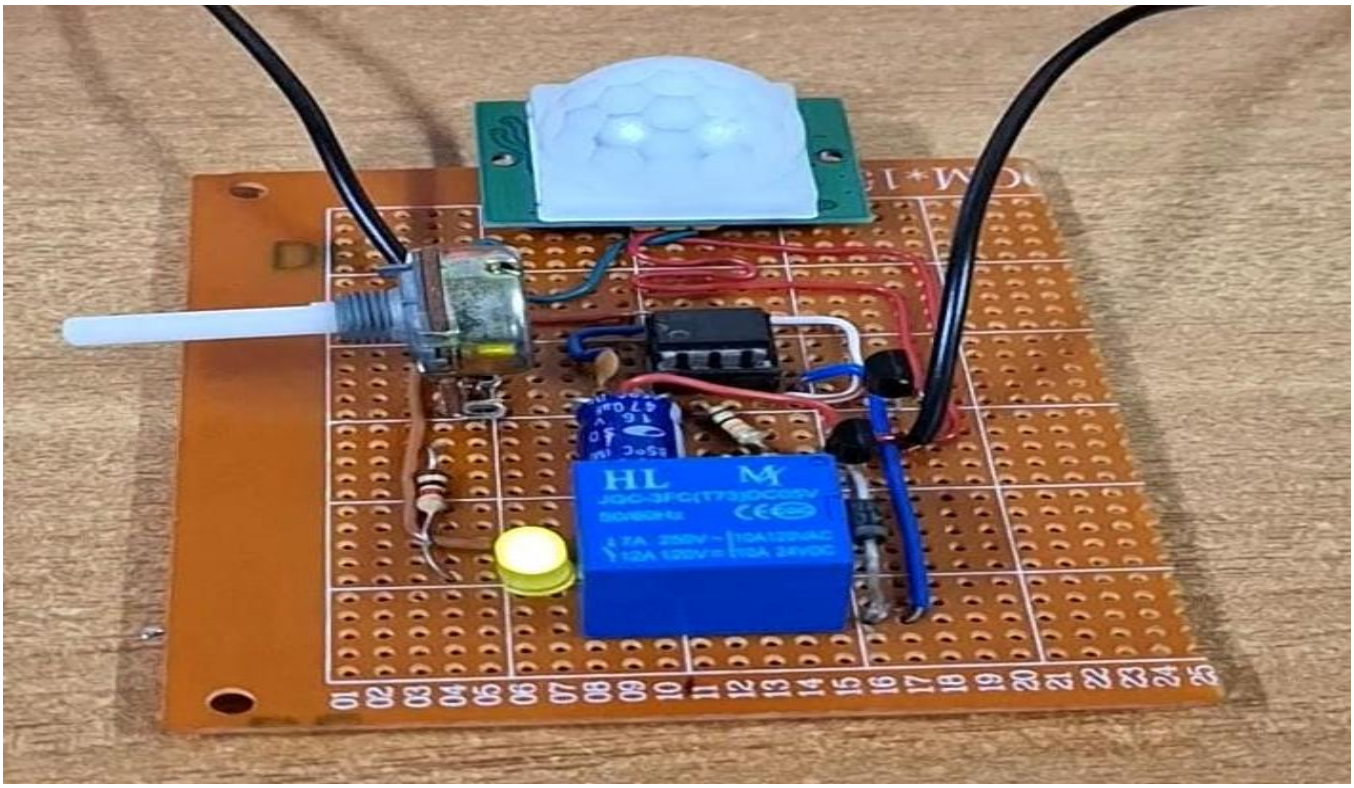

EXPLANATION OF CIRCUIT:

PARTS OF THE CIRCUIT:

1. PIR Motion Sensing Section

2. Monostable Multivibrator section

3. Relay Driver Section

EXPLANATION OF EACH PART:

1)PIR Motion Sensing Section:

This includes the **PIR sensor module** and the **2N3904 transistor**. When the PIR sensor detects motion, its output goes high, which biases the base of the 2N3904 transistor. The transistor switches ON, triggering the 555 timer IC.

2)Monostable multivibrator section:

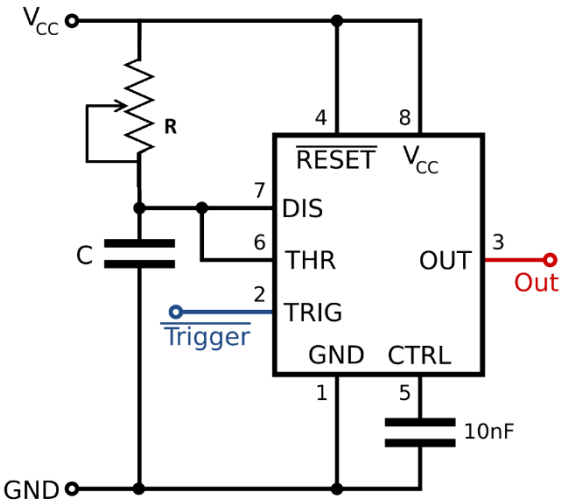

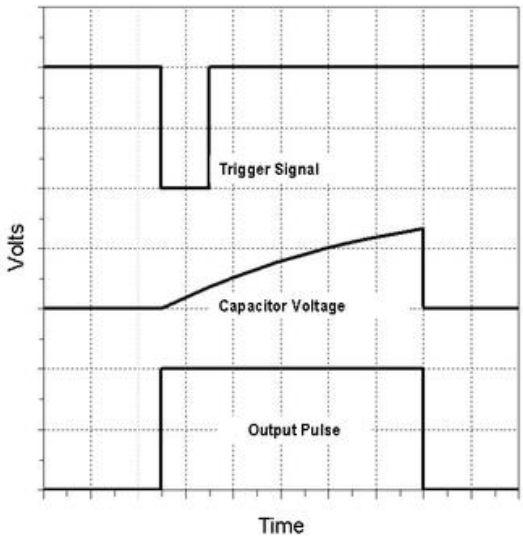

This section uses the **555 timer IC** in monostable mode. Components of this section include 555 timer IC, 1Mohm B type Variable resistor, 470uf electrolytic capacitor, 0.01uf ceramic disc capacitor, 10Kohm resistor and 1Koh resistor.

Monostable mode produces an output pulse when the voltage at the trigger pin falls below 1/3 of the supply voltage. The timer output (pin 3) goes high. An RC circuit consisting of the 470uf capacitor and the variable resistor sets the output pulse's duration as the time t in seconds it takes to charge c to 2/3 of the supply voltage.

$$t = \ln(3) \times R \times C$$

Where R is the resistance in ohms, C is the capacitance in farads, ln (3) is the natural log of 3 constant. The output pulse duration can be lengthened or shortened as desired by adjusting the values of the variable resistor. The 0.01uf capacitor stabilises the control voltage(pin5) by filtering out noise. Subsequent triggering before the end of this timing interval won't affect the output pulse.

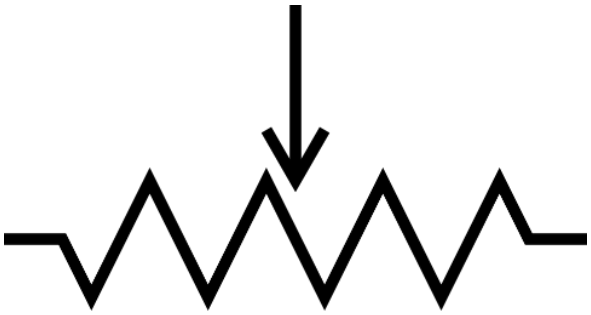

3)Relay Driver Section:

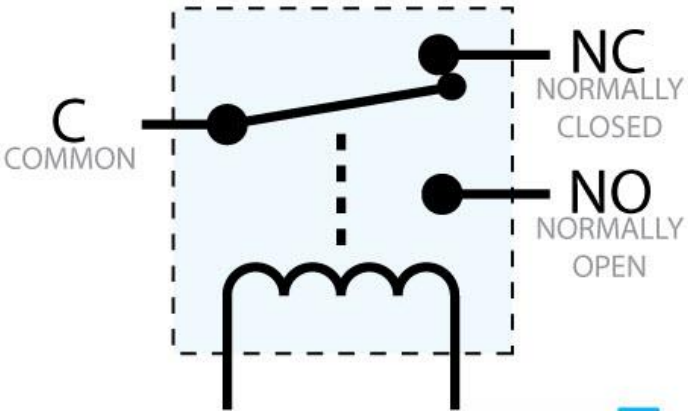

This includes the **BC547 transistor**, **1Kohm resistor**, 12v SPDT **relay**, and **1N4007 diode**. A 5mm (Yellow) LED along with a 1Kohm resistor is connected to the relay as a visual indicator of its output.

When the output of the 555 timer (pin 3) goes high, the BC547 transistor turns ON. The transistor allows current to flow through the relay coil, energising the electromagnet. The COM (common) terminal which was initially connected to the N/C (normally closed) terminal now connects to the N/O (normally open) terminal. This completes the circuit for the load. The LED turns ON, indicating that the relay is activated. The diode connected across the relay coil acts as a flyback diode and protects the circuit from voltage spikes generated when the relay coil de-energizes.

ADVANTAGES

1) **Energy Efficiency**:

   The lamp turns on only when motion is detected, conserving electricity by operating only when needed.

2) **Convenience**:

   No need to manually switch the lamp on or off, especially useful in situations where your hands are full or in the dark.

3) **Enhanced Safety**:

   Helps prevent accidents by illuminating dark areas when movement is detected, making it ideal for stairs, hallways, and children's rooms.

4) **Cost Savings**:

   Reduced energy consumption leads to lower electricity bills and longer bulb life.

5) **Automatic Operation**:

   The motion sensor eliminates the need to remember to turn the light off, ensuring it’s only active when required.

6) **Versatility**:

   Can be used in various settings, including homes, offices, garages, and outdoor spaces for security purposes.

7) **Security:**

   Acts as a deterrent for intruders when used outdoors, as sudden lighting can startle them and alert residents

DISADVANTAGES

1) **False Triggers**:

The sensor may activate due to pets, wind-blown objects, or other unintended movements, leading to unnecessary illumination

2) **Limited Detection Range:**

Motion sensors have a specific detection range and angle, which might not cover the desired area completely.

3) **Maintenance and Durability:**

Sensors can wear out over time or malfunction, requiring maintenance or replacement

4) **Higher Initial Cost**:

Motion sensor lamps are generally more expensive than traditional night lamps.

5) **Compatibility Issues**:

May not function well in extreme weather conditions or environments with excessive heat, cold, or humidity

6) **Delayed Activation**:

Some sensors might take a moment to activate, which could be inconvenient in critical situations.

7) **Battery Dependency (if applicable)**:

If the lamp is battery-operated, frequent replacement or recharging might be necessary.

8) **Lack of Continuous Illumination**:

Not suitable for areas where constant lighting is preferred or required, as the lamp turns off after a set duration without motion.

APPLICATIONS

1) **Home Applications:**

- Serves as a convenient night lamp in bedrooms that activates when you get out of bed.
- Offers a subtle light in bathrooms for nighttime visits without disturbing sleep with bright overhead lights.
- Automatically illuminates small, enclosed spaces like shelves when accessed.

2) **Outdoor Applications:**

- Acts as a deterrent for intruders by turning on when motion is detected around the perimeter of a property.
- Can be used in parking areas.Lights up automatically when vehicles or people enter, ensuring security and ease of parking.

3) **Commercial Applications:**

- Used in hallways, restrooms, and shared spaces in office for energy efficiency by ensuring lights are off when not in use
- Can be used in parking areas.Lights up automatically when vehicles or people enter, ensuring security and ease of parking.

4) **Vehicle Applications:**

- Lights turn on when doors open or movement is detected within parked vehicles.
- Improves safety and security by detecting movement around parked cars

CONCLUSION

Through this project, we have built and tested the night lamp with motion sensor and timer circuit, demonstrating how the PIR sensor efficiently detects movement and triggers the lamp, while the 555 timer regulates the duration of the light,.

The advantages of this system include energy efficiency, convenience, and reduced electricity costs, as the lamp only operates when needed. However, some potential disadvantages include the limited range of the PIR sensor and the need for proper calibration to avoid false triggers.

This project has a wide range of applications, including in homes, offices, hallways, and public spaces, where automated lighting can enhance safety, convenience, and energy management.

Overall, the project showcases the practical use of motion sensing and timing circuits, providing a useful and sustainable solution for modern lighting needs.

REFERENCES

Passive infrared ,sensor,https://en.wikipedia.org/wiki/Passive_infrared_sensor

Pulse Circuits - Monostable Multivibrator, https://www.tutorialspoint.com/pulse_circuits/pulse_circuits_monostable_multivibrator.htm

Relay,https://en.wikipedia.org/wiki/Relay#:~:text=A%20relay%20is%20an%20electrically,break%20contacts%2C%20or%20combinations%20thereof.