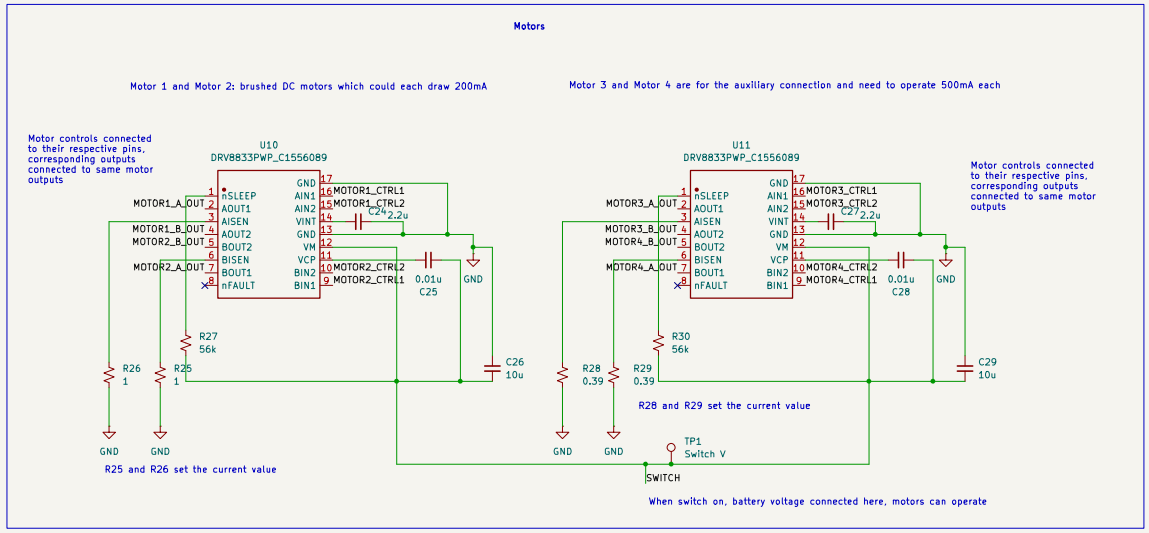

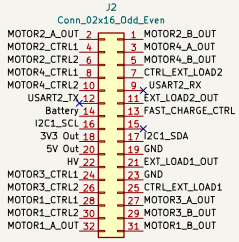

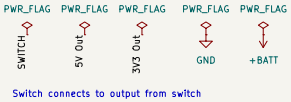

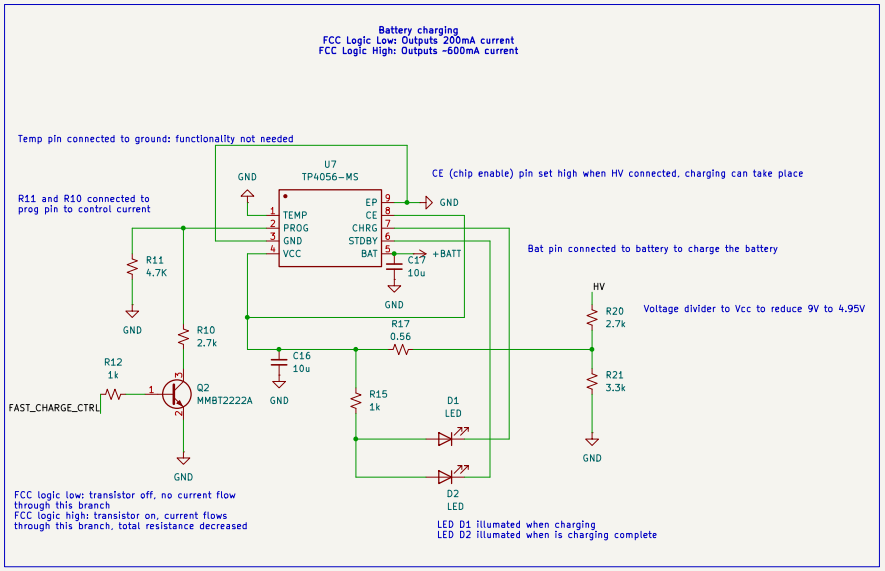

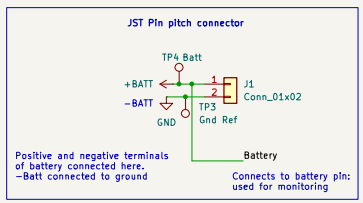

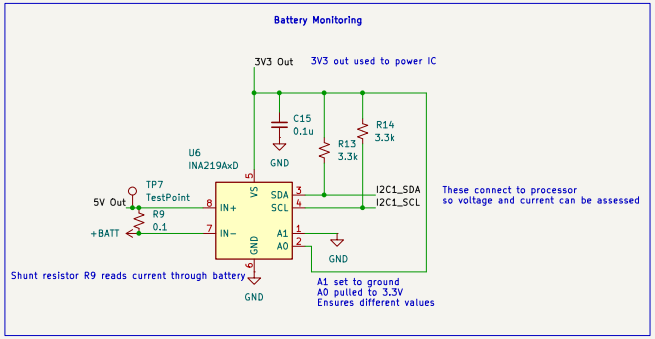

@Author : Mishka Singh (SNGMIS005)

Sheet: /
File: mine.kicad_sch

Title: Schematic for requirements: R03, R04, R05, R06

Size: A3	Date: 2025-03-27	Rev: V1.0
KiCad E.D.A. 9.0.0		Id: 1/1