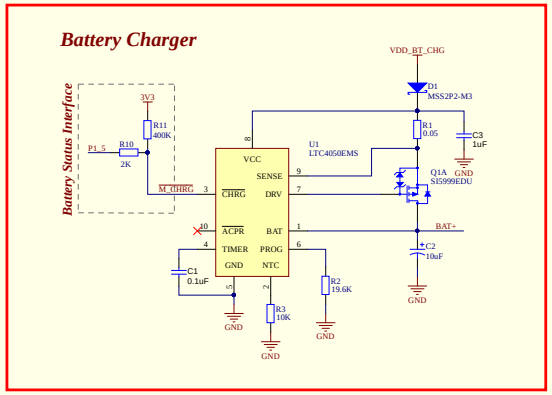

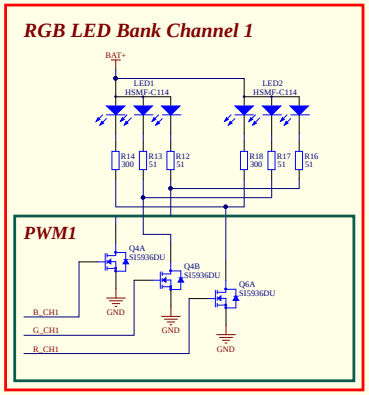

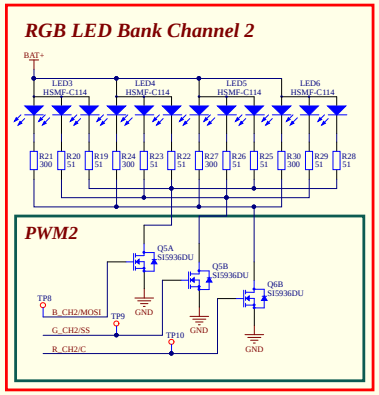

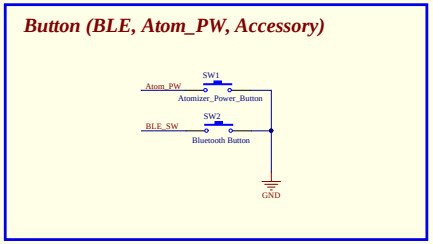

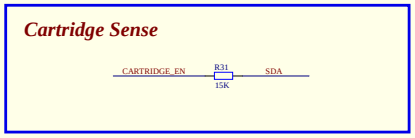

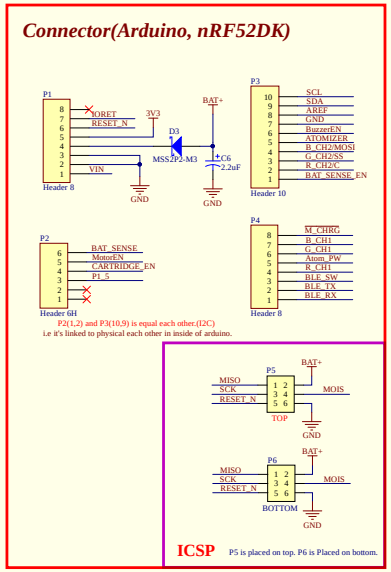

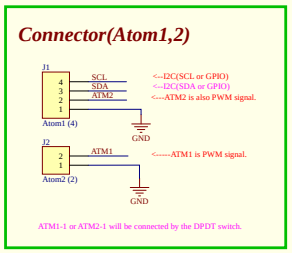

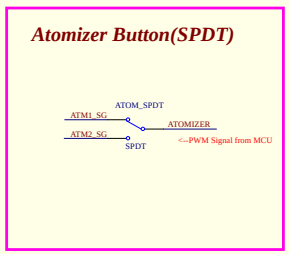

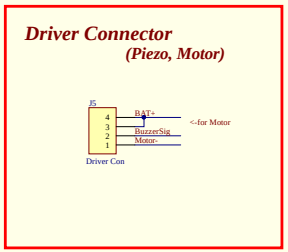

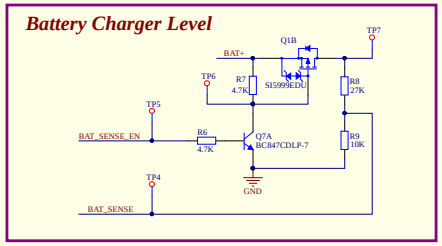

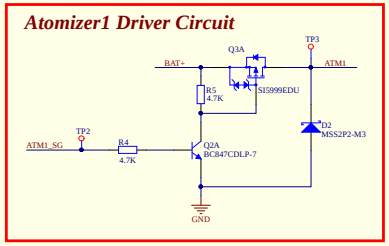

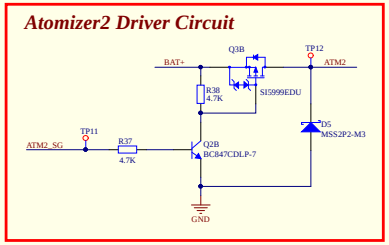

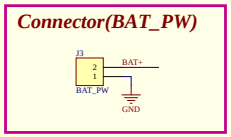

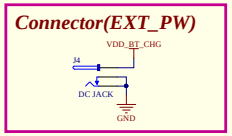

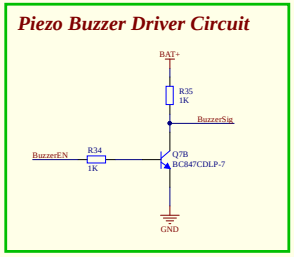

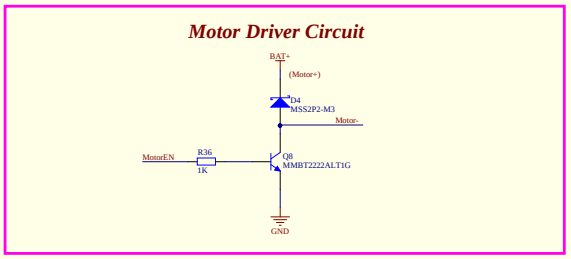

Title	Vapeix Shield 1.0.1	
Size A2	Project Number 1	Revision 1.0.1
Date: 5/29/2016		Sheet 1 of 1
File:		Drawn by : Anne Moller

VAPEiX POWERED

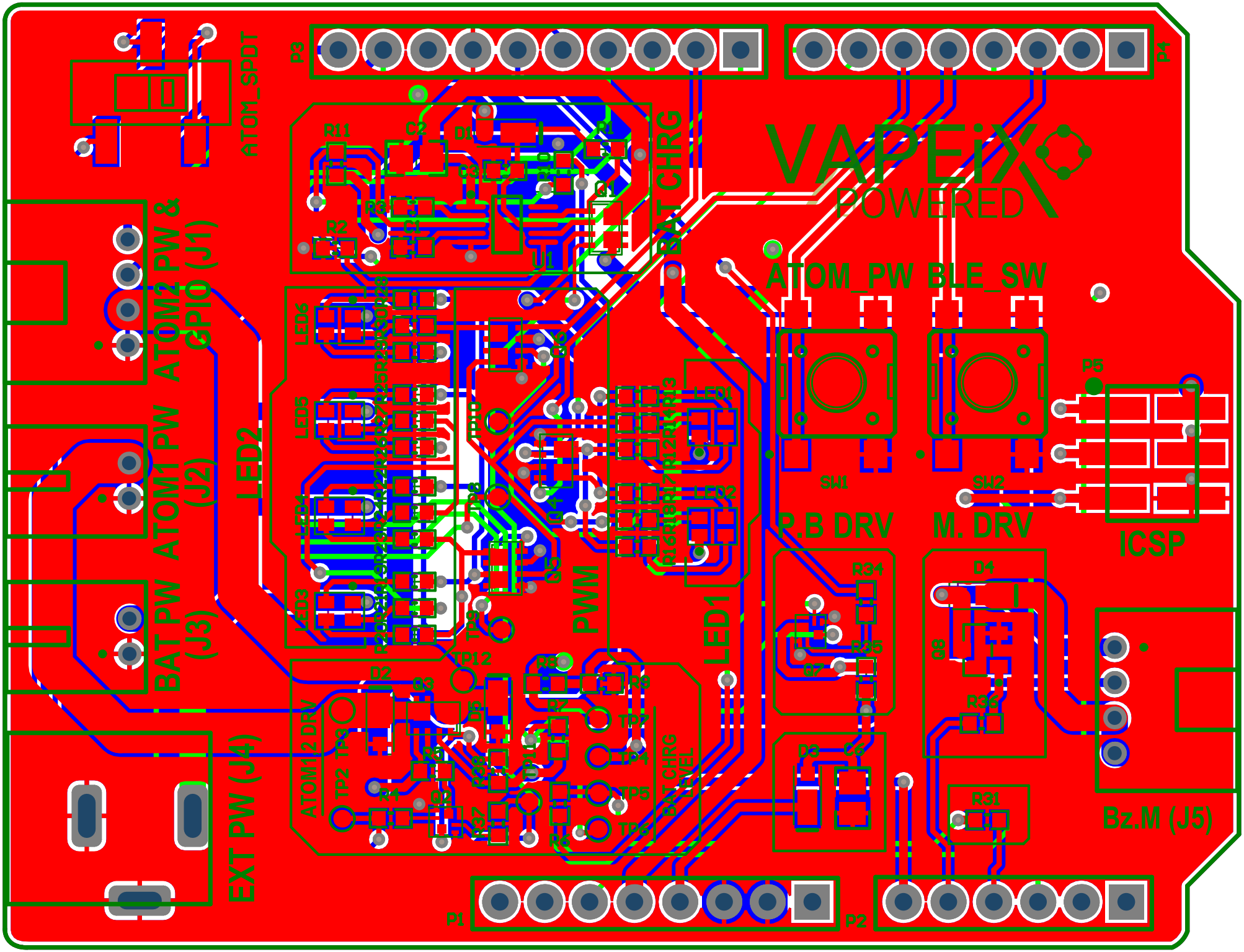
ATOM_SPDT
P3
P4
R11
C2
D1
R1
R2
BAT CHRG
VAPEiX
POWERED
ATOM_PW BLE_SW
ATOM2 PW &
GPIO (J1)
ATOM1 PW
(J2)
BAT PW
(J3)
LED2
LED6
LED5
LED4
LED3
PWM
LED1
SW1
SW2
P5
P.B DRV
M. DRV
ICSP
R34
D4
R35
R36
D3
C3
R31
Bz.M (J5)
TP12
D2
G3
ATOM12 DRV
TP3
TP2
R41
G2
R37
R32
R33
R10
R8
R9
R7
TP7
TP4
TP5
TP6
R6
BAT CHRG
LED
EXT PW (J4)
P1
P2