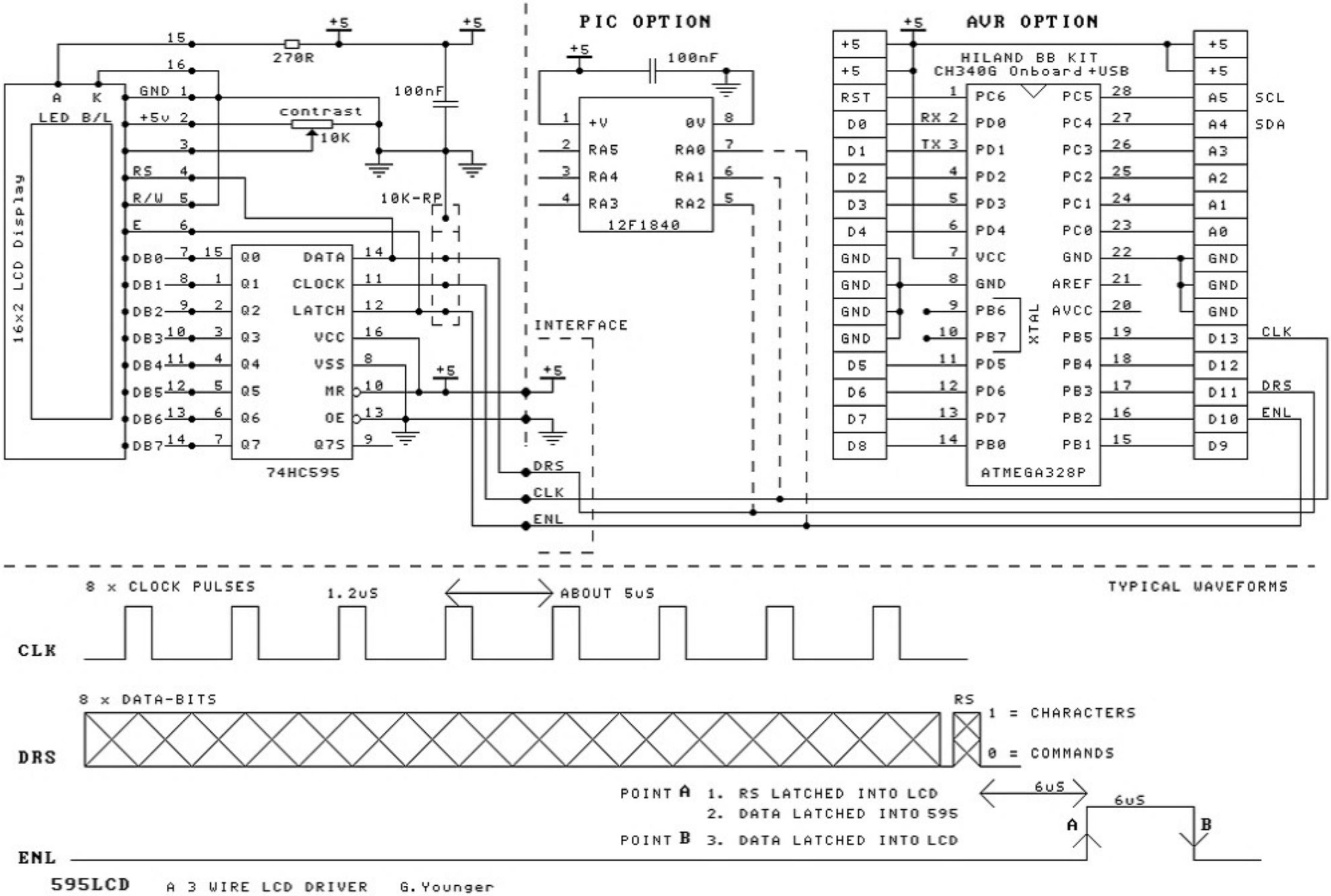

595LCD A 3 WIRE LCD DRIVER G.Younger