Group 7 - Environment Combo Module

Names: -Janson
-Kevin
-Mucyo
-Marc

Date: On 26th September 2025

Project Purpose

The Group 7 "Environment Combo" module is a plug-in PCB designed to enhance an ESP32-D0WDQ6 (LCSC #C967020) base board by monitoring environmental conditions. The primary purpose is to measure atmospheric pressure and temperature using a sensor, detect ambient light levels, and provide visual feedback through LED indicators. The module triggers a yellow LED when light levels drop below a threshold (indicating low light) and a red LED when pressure exceeds a threshold (indicating high pressure), aiding in environmental awareness for applications such as weather monitoring or smart home automation. The design is compact, cost-effective, and integrates seamlessly with the ESP32 via a 2x19 female header system.

Sensors Used

- BMP280 (LCSC #C83291): A precision sensor for measuring pressure (range: 300-1100 hPa) and temperature (-40°C to +85°C) via I2C communication. It is configured with a 0.1µF decoupling capacitor (C14663) for stability.
- LDR (Light-Dependent Resistor, LCSC #C125631): A photoresistor with a resistance range of 5-20kΩ, used with a 10kΩ resistor (C21190) in a voltage divider to provide an analog signal proportional to light intensity.

ESP32 Pins Used

The module connects to the ESP32 through female headers (FH1 left, FH2 right) that align with the male headers (H3 and H2). The following ESP32 pins are utilized:

- Power and Ground:
  - FH6-1 (H3-1): 3V3 (VCC for BMP280 and LDR divider).
  - FH6-19 (H3-19) and FH2-1 (H2-1): GND (common ground).
- BMP280 I2C:
  - FH7-4 (H2-4): GPIO21 (D4, SDA).
  - FH7-3 (H2-3): GPIO22 (D5, SCL).
- LDR Analog:
  - FH6-5 (H3-5): GPIO34 (A1, analog input for LDR output).
- LED Indicators:
  - FH4-16 (H3-16): GPIO2 (D1, yellow LED for low light).
  - FH4-18 (H3-18): GPIO4 (D2, red LED for high pressure).

Screenshot

Schematic:

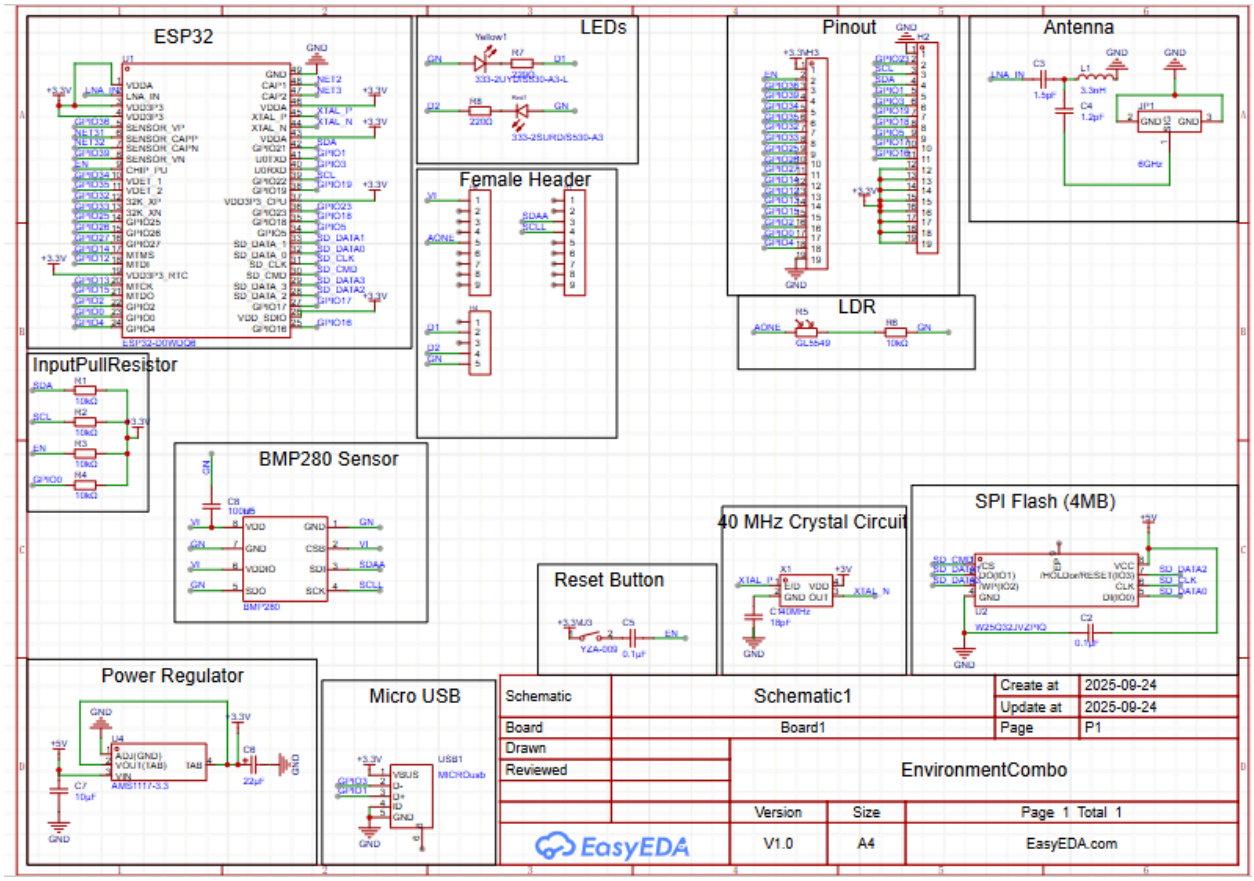

PCBs:

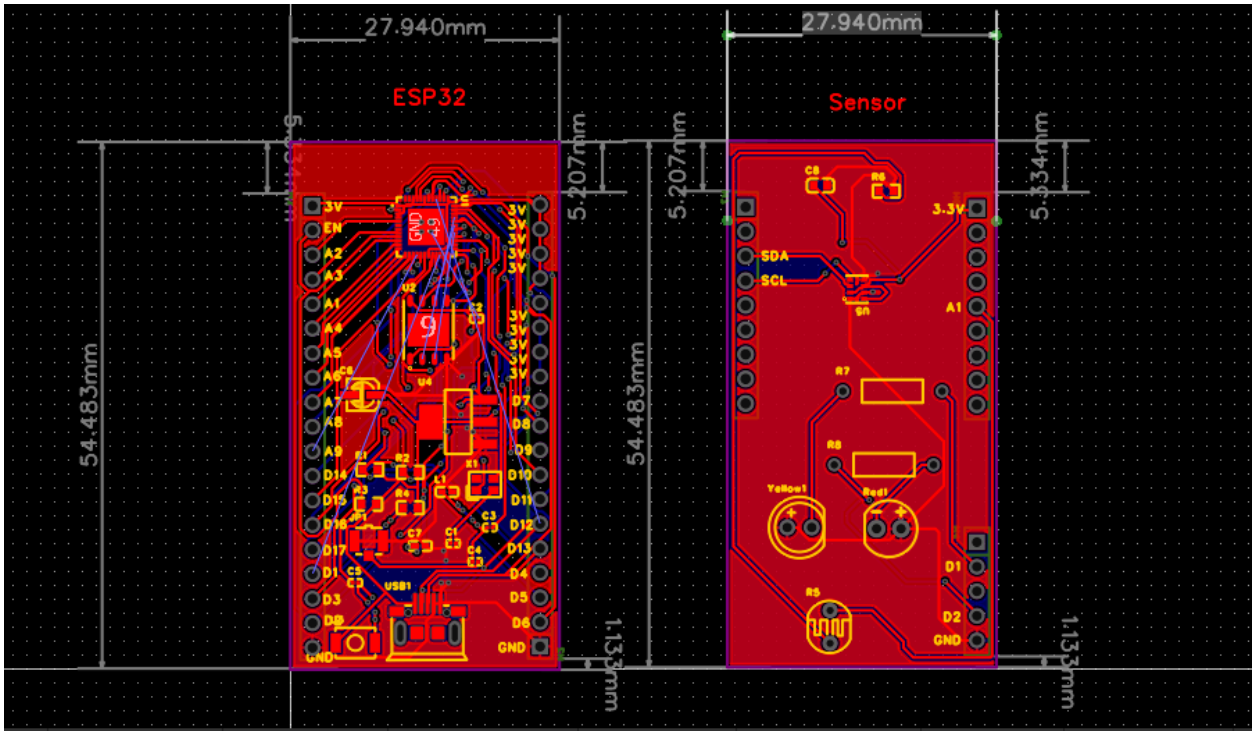

3Ds:

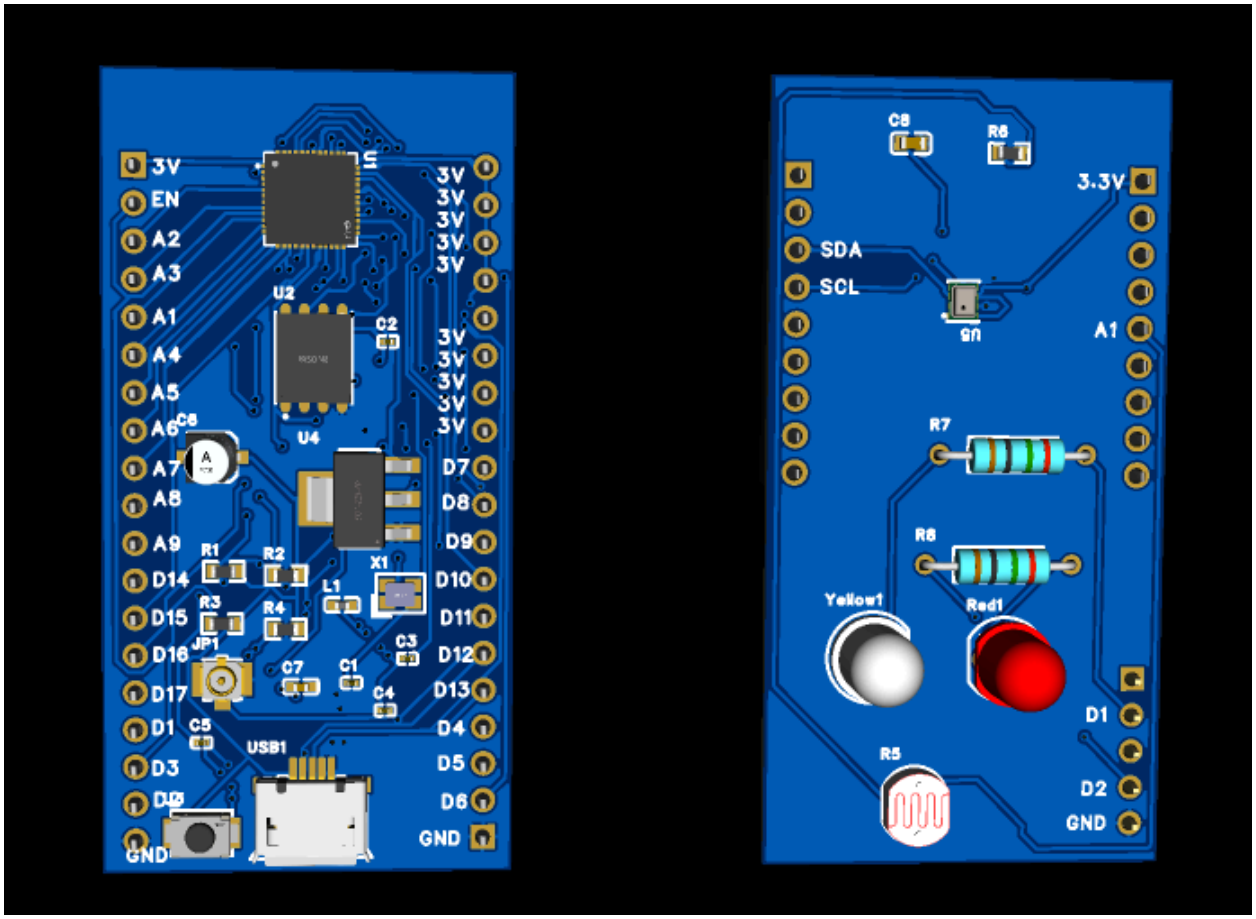
3V
EN
A2
A3
A1
A4
A5
A6
A7
A8
A9
D14
D15
D16
D17
D1
D3
D0
GND
U2
U4
C2
C8
R1
R2
R3
R4
L1
X1
C3
C7
C1
C4
C5
JP1
USB1
3V
3V
3V
3V
3V
3V
3V
3V
3V
3V
D7
D8
D9
D10
D11
D12
D13
D4
D5
D6
GND
C8
R8
3.3V
SDA
SCL
A1
R7
R8
Yellow1
Red1
D1
R5
D2
GND

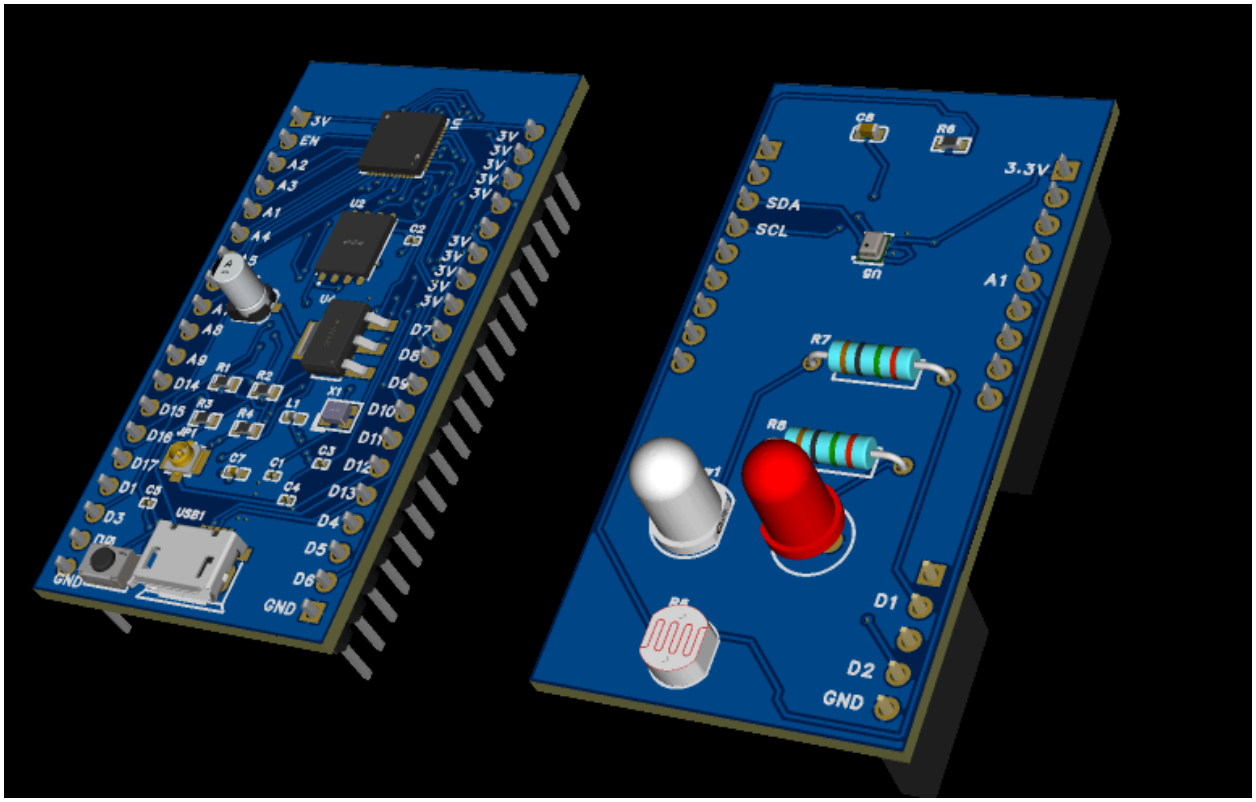
3V
EN
A2
A3
A1
A4
A8
A9
D14
D15
D16
D17
D1
D3
GND
D7
D8
D9
D10
D11
D12
D13
D4
D5
D6
GND
USB1
C8
R6
3.3V
SDA
SCL
A1
R7
R8
D1
D2
GND

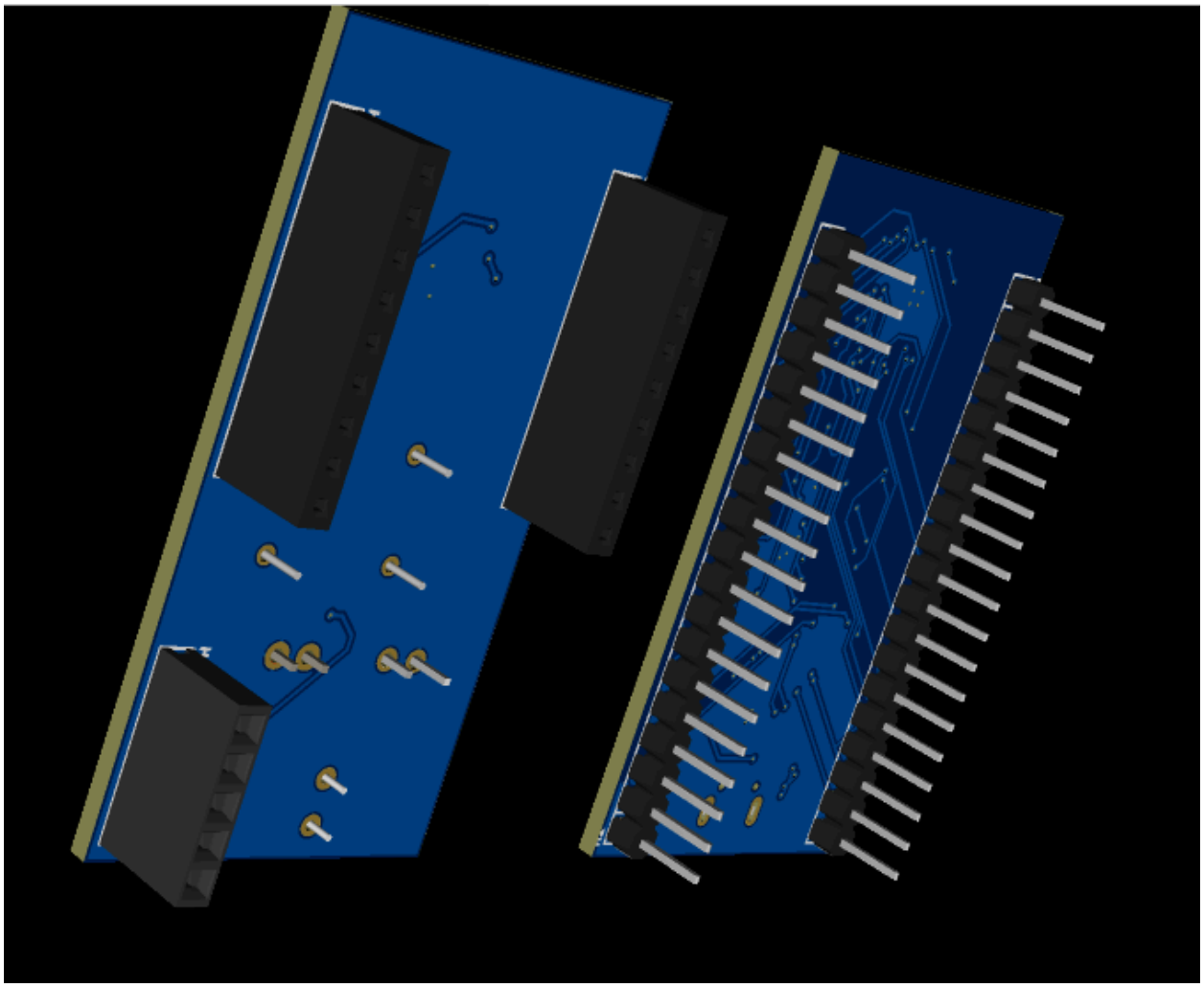

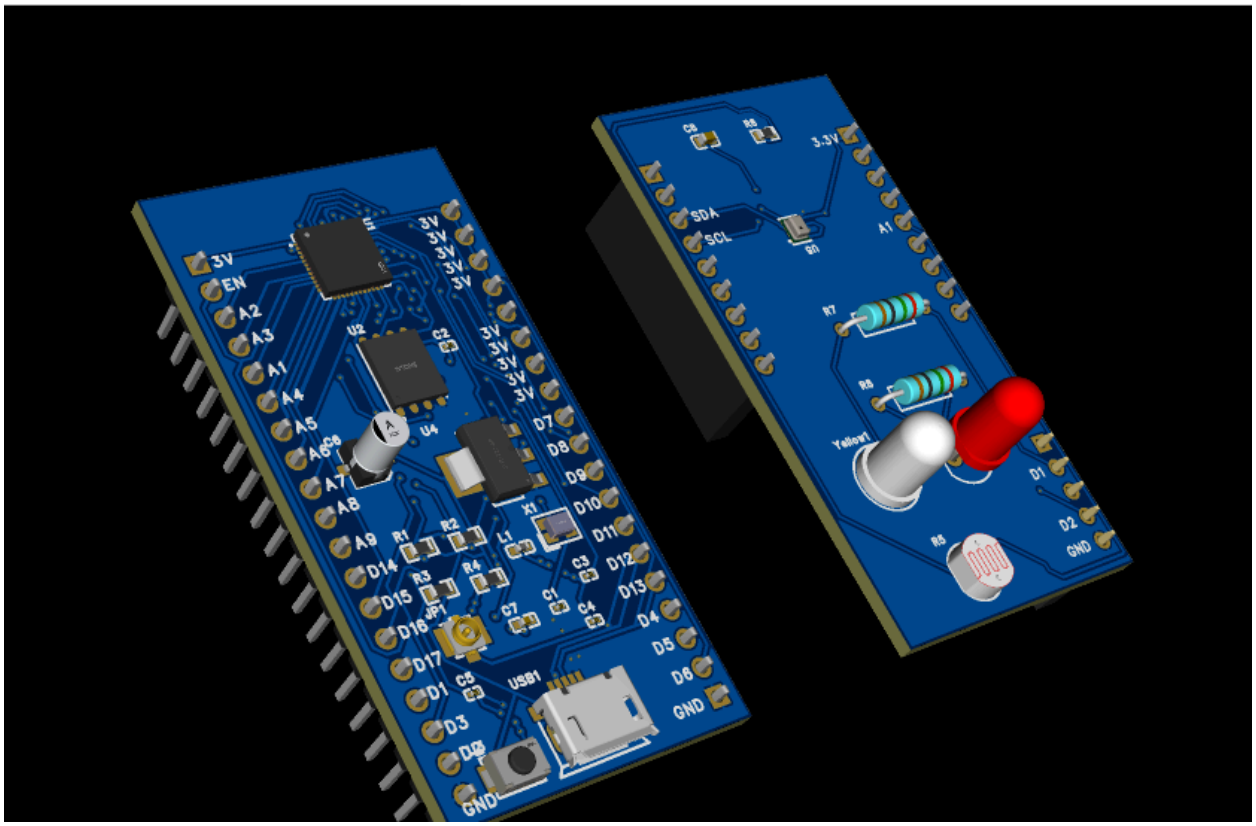
3V
EN
A2
A3
A1
A4
A5
A6
A7
A8
A9
D14
D15
D16
D17
D1
D3
D2
GND
U2
U4
C2
C6
R1
R2
R3
R4
L1
X1
C3
C1
C4
C7
JP1
USB1
D7
D8
D9
D10
D11
D12
D13
D4
D5
D6
GND
3V
3.3V
SDA
SCL
A1
R7
R8
Yellow1
D1
D2
GND

Conclusion: