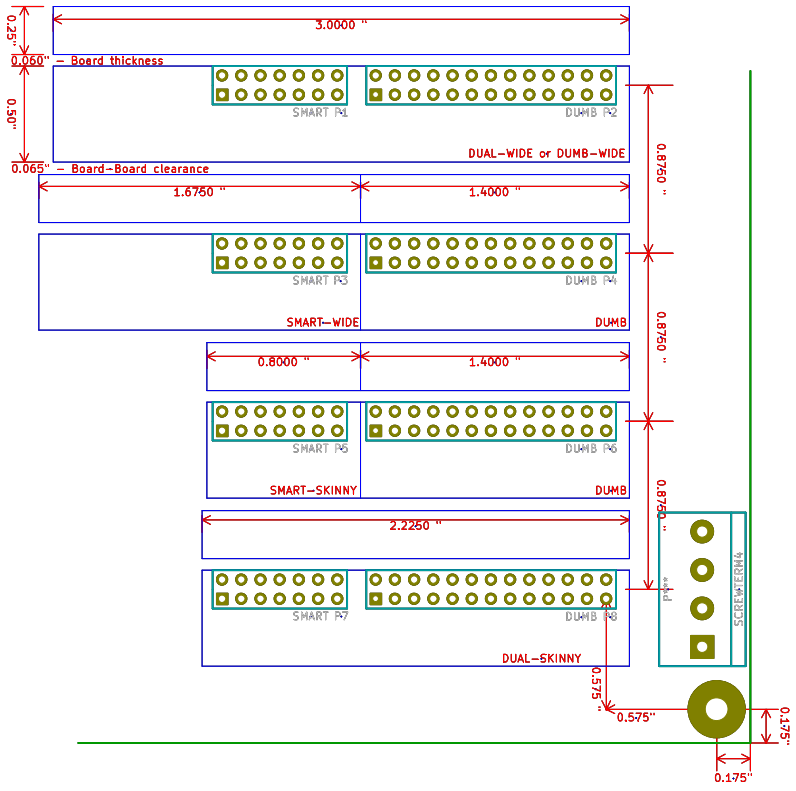

File: kinen_MB.brd		
Sheet: 1/1		
Title:		
Size: A4	Date: 1 mar 2013	**Rev:**
KiCad E.D.A. pcbnew (2012-01-19 BZR 3256)-stable		Id: 1/1