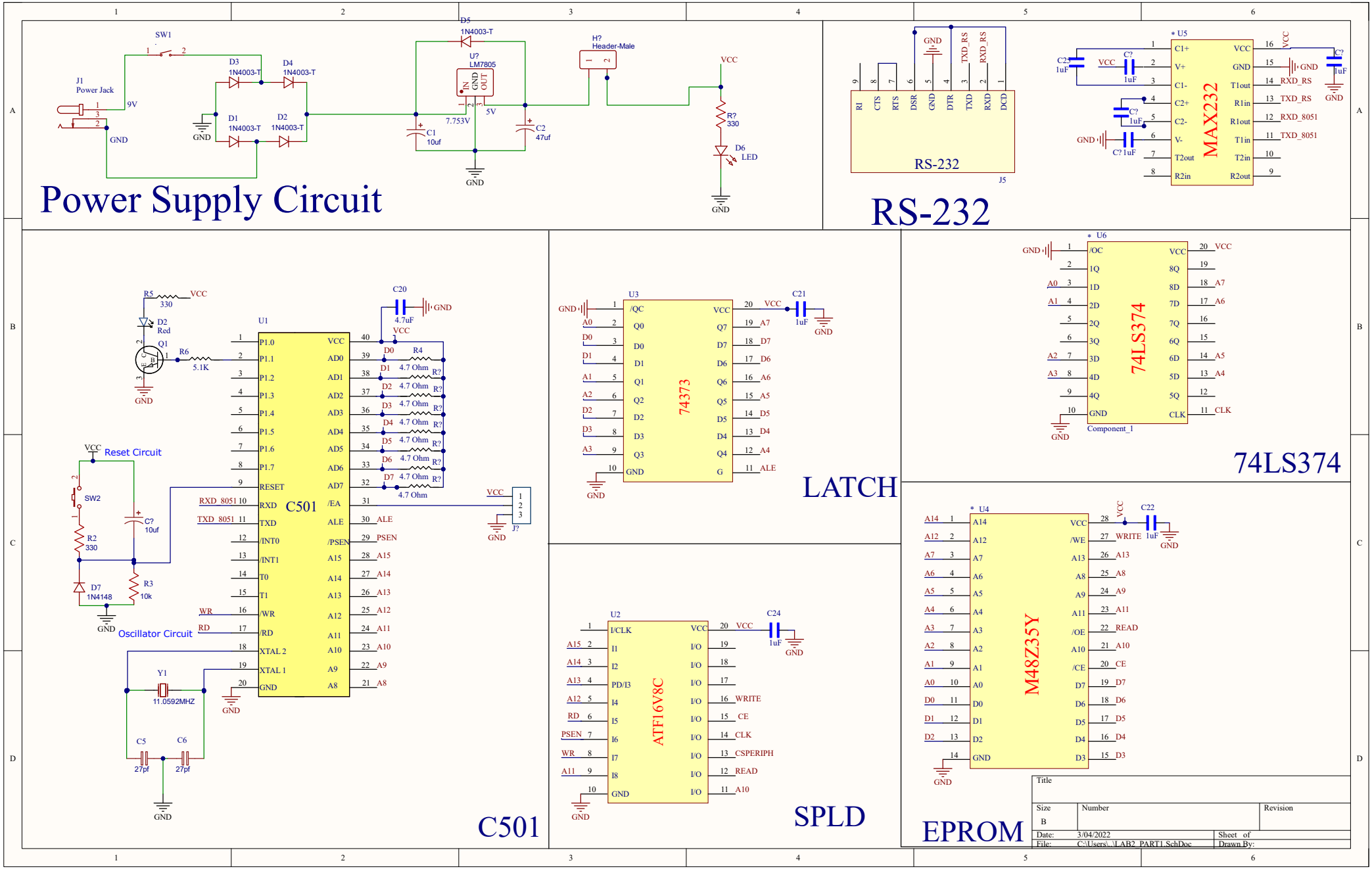
Power Supply Circuit
SW1
J1
Power Jack
9V
GND
D3
1N4003-T
D4
1N4003-T
D1
1N4003-T
D2
1N4003-T
D5
1N4003-T
U?
LM7805
IN
GND
OUT
7.753V
5V
C1
10uf
C2
47uf
H?
Header-Male
VCC
R?
330
D6
LED
RS-232
J5
RI
CTS
RTS
DSR
GND
DTR
TXD
RXD
DCD
TXD_RS
RXD_RS
MAX232
U5
C1+
V+
C1-
C2+
C2-
V-
T2out
R2in
VCC
GND
T1out
R1in
R1out
T1in
T2in
R2out
RXD_RS
TXD_RS
RXD_8051
TXD_8051
C2?
1uF
C?
1uF
C? 1uF
C21
1uF
C22
1uF
C24
1uF
C20
4.7uF
R5
330
D2
Red
Q1
R6
5.1K
U1
C501
P1.0
P1.1
P1.2
P1.3
P1.4
P1.5
P1.6
P1.7
RESET
RXD
TXD
/INT0
/INT1
T0
T1
/WR
/RD
XTAL 2
XTAL 1
AD0
AD1
AD2
AD3
AD4
AD5
AD6
AD7
/EA
ALE
/PSEN
A15
A14
A13
A12
A11
A10
A9
A8
R4
4.7 Ohm
R?
RXD_8051
TXD_8051
WR
RD
Reset Circuit
SW2
C?
10uf
R2
330
D7
1N4148
R3
10k
Oscillator Circuit
Y1
11.0592MHZ
C5
27pf
C6
27pf
J?
LATCH
U3
74373
/QC
Q0
D0
D1
Q1
Q2
D2
D3
Q3
GND
VCC
Q7
D7
D6
Q6
Q5
D5
D4
Q4
G
A0
A1
A2
A3
A7
A6
A5
D5
D4
A4
ALE
74LS374
U6
Component_1
/OC
1Q
1D
2D
2Q
3Q
3D
4D
4Q
8Q
8D
7D
7Q
6Q
6D
5D
5Q
CLK
SPLD
U2
ATF16V8C
I/CLK
I1
I2
PD/I3
I4
I5
I6
I7
I8
I/O
WRITE
CE
CLK
CSPERIPH
READ
A10
EPROM
U4
M48Z35Y
A14
A12
A7
A6
A5
A4
A3
A2
A1
A0
D0
D1
D2
/WE
A13
A8
A9
A11
/OE
/CE
D7
D6
D5
D4
D3
READ
CE
Title
Size
B
Number
Revision
Date:
3/04/2022
Sheet of
File:
C:\Users\..\LAB2_PART1.SchDoc
Drawn By: