Indian Institute of Technology Guwahati

Department of Electronics and Electrical Engineering

EE252 — Measurement and Instrumentation

Urban Air Quality Monitoring System

Multi-Sensor Fusion with Analog Front-End Design and Edge Signal Processing

Project Team

01. Ansh Agarwal 240102120
02. Parate Aditya 240102123
03. Tarun Gupta 240102257
04. Anshika Dikshit 240102015
05. Kanishka Mahale 240102044

Abstract

Urban air quality monitoring poses significant challenges including sensor drift, cross-sensitivity, and environmental interference in multi-gas detection systems. This project presents a comprehensive multi-sensor fusion system integrating an Analog Front-End (AFE) simulation pipeline with digital edge processing. The AFE, designed in LTspice, models electrochemical cells for CO and NO_2, an optical scattering sensor for $PM_{2.5}$, a PT100 RTD via Wheatstone bridge for temperature, and a capacitive humidity sensor. A 12-bit ADC model with 64× oversampling feeds into a Python-based digital processing pipeline implementing environmental corrections, cross-sensitivity compensation, and two fusion algorithms: a Kalman filter and a polynomial regression model. EPA-compliant AQI computation, a hysteresis-based alarm state machine, and fault detection logic complete the processing chain. Results across three validation scenarios demonstrate that Kalman filtering outperforms regression in dynamic pollution spike conditions.

Contents

1 Introduction **2**

1.1 Background and Motivation . . . 2

1.2 Problem Statement . . . 2

1.3 Project Contributions . . . 2

2 Current Status of the System **2**

3 System Description **2**

3.1 Overall System Pipeline . . . 2

3.2 Sensor Modelling and Characterisation . . . 3

3.2.1 Electrochemical Cells (CO and NO_2) . . . 3

3.2.2 Optical Scattering Sensor ($PM_{2.5}$) . . . 3

3.2.3 PT100 RTD — Wheatstone Bridge . . . 3

3.2.4 Capacitive Humidity Sensor . . . 3

3.3 Analog Front-End Design and Simulation . . . 5

3.3.1 CO Channel — TIA and Sallen-Key Filter . . . 5

3.3.2 Temperature Channel — Wheatstone Bridge and INA . . . 5

3.3.3 $PM_{2.5}$ Channel — TIA, High-Gain Amplifier, Multi-Stage Filter . . . 5

3.3.4 LTspice Transient and AC Simulation Results . . . 5

3.4 Digital Signal Processing and Corrections . . . 5

3.4.1 ADC Modelling . . . 5

3.4.2 Environmental Correction . . . 5

3.4.3 Cross-Sensitivity Correction . . . 7

3.5 Sensor Fusion Algorithms . . . 7

3.5.1 Kalman Filter . . . 7

3.5.2 Polynomial Regression Baseline . . . 7

3.6 AQI Engine and Alarm State Machine . . . 8

3.6.1 EPA AQI Computation . . . 8

3.6.2 Hysteresis Alarm State Machine . . . 8

4 Our View **8**

5 Conclusion and Future Direction **9**

5.1 Summary of Achievements . . . 9

5.2 Algorithm Insights . . . 9

5.3 System Limitations . . . 9

5.4 Future Enhancements . . . 9

1. Introduction

1.1. Background and Motivation

Deteriorating urban air quality has emerged as one of the most pressing public health challenges of the twenty-first century. The World Health Organization estimates that exposure to fine particulate matter ($PM_{2.5}$) and gaseous pollutants such as carbon monoxide (CO) and nitrogen dioxide (NO_2) contributes to millions of premature deaths annually. Real-time, spatially dense monitoring networks are therefore indispensable for evidence-based environmental policy, early-warning systems, and epidemiological research.

Electrochemical and optical sensors offer a cost-effective pathway to high-density deployment compared to reference-grade analyser stations. However, these low-cost sensors suffer from well-documented limitations: baseline drift with age, temperature and humidity-induced offsets, and inter-species cross-sensitivity that can cause false readings when multiple gases are simultaneously present. Addressing these limitations through careful Analog Front-End (AFE) design and digital compensation is essential before meaningful AQI values can be derived.

1.2. Problem Statement

This project targets three interconnected engineering challenges:

1. **Sensor signal conditioning:** Designing a multi-channel AFE that accurately converts low-level sensor outputs (nA-range currents, μV-range bridge differentials) to ADC-compatible voltage levels while controlling noise and bandwidth.
2. **Digital compensation and fusion:** Correcting for temperature/humidity dependence and cross-sensitivity, then fusing corrected sensor streams into reliable concentration estimates using both a Kalman filter and polynomial regression.
3. **AQI engine and alarm logic:** Translating corrected concentrations into EPA-standard AQI values and driving a hysteresis alarm state machine with fault detection.

1.3. Project Contributions

The principal contributions of this project are:

- A fully parameterised LTspice AFE simulation covering three sensor channels with parametric tolerance sweep analysis.
- A modular Python digital processing pipeline with 64$\times$ oversampling ADC modelling, multi-channel environmental correction, and cross-sensitivity matrix inversion.
- A rigorous comparison of Kalman filter versus polynomial regression sensor fusion across training/inference data splits with RMSE and MAE metrics.
- An EPA-compliant AQI engine with piecewise linear breakpoint interpolation for CO, NO_2, and $PM_{2.5}$.

2. Current Status of the System

Existing low-cost AQI monitoring systems predominantly suffer from one or more of the following gaps. First, many studies validate only in simulation without addressing the full signal chain from sensor to output. Second, those that do implement hardware typically rely on single-parameter sensing, ignoring the compound nature of AQI. Third, only a small body of work applies Kalman filtering to multi-gas sensor fusion, and fewer still compare it rigorously against regression baselines on dynamic pollution scenarios.

Electrochemical gas sensors (e.g., Alphasense B4 series) are widely deployed for CO and NO_2 measurement. Their transimpedance amplification requirements, baseline drift, and strong temperature-sensitivity demand dedicated AFE circuits. Optical particle counters for $PM_{2.5}$ require pulse-mode TIA stages and multi-stage filtering. Existing implementations rarely integrate all three sensor modalities into a single, compensated AFE-to-algorithm pipeline with tolerance analysis.

3. System Description

3.1. Overall System Pipeline

The system is organised as a three-stage pipeline: **(1) AFE Simulation**, **(2) Edge Processing**, and **(3) AQI Engine**. Figure 1 shows the complete block diagram.

Table 1: Sensor specifications and compliance standards.

Parameter	Sensor	Range	Sensitivity	Op. Temp.	Standard
CO	EC cell (B4)	0–1000 ppm	400 nA/ppm	−30 to +50°C	WHO/NIOSH
NO_2	EC cell (B4)	0–20 ppm	−800 nA/ppm	−30 to +50°C	WHO/EPA
$PM_{2.5}$	OPC (optical)	0–500 μg/m^3	5 mV/(μg/m^3)	0 to +60°C	EPA NAAQS
Temperature	PT100 RTD	−20 to +80°C	0.385 Ω/°C	—	IEC 60751
Rel. humidity	Capacitive	0–100 %RH	40 mV/%RH	0 to +60°C	SHT3x

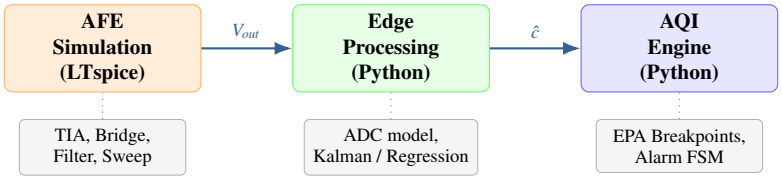

Figure 1: Three-stage system pipeline: AFE Simulation → Edge Processing → AQI Engine.

3.2. Sensor Modelling and Characterisation

3.2.1. Electrochemical Cells (CO and NO_2)

Alphasense B4-series electrochemical cells operate on amperometric principles. The working electrode current I_W is linearly proportional to gas concentration:

$$I_W(c,T) = I_0(T) + S(T) \cdot c \tag{1}$$

where $I_0(T)$ is the baseline current and $S(T)$ is the temperature-dependent sensitivity in nA/ppm. A differential measurement subtracts the auxiliary electrode current I_A to cancel common-mode temperature drift:

$$I_{diff} = I_W - I_A = S(T) \cdot c + \Delta I_{offset} \tag{2}$$

3.2.2. Optical Scattering Sensor ($PM_{2.5}$)

Laser-based particle counters quantify particulate mass by measuring side-scattered light intensity. The sensor outputs a current pulse I_{PM} proportional to particle concentration, converted to voltage via a transimpedance stage:

$$V_{PM}(c_{PM}) = V_{offset} + S_{PM} \cdot c_{PM} \tag{3}$$

Humidity correction is required above 70 %RH because water condensation inflates apparent particle size.

3.2.3. PT100 RTD — Wheatstone Bridge

A PT100 platinum resistance thermometer is configured in a Wheatstone bridge:

$$V_{bridge} = V_{ex}\left(\frac{R_{PT100}(T)}{R_{PT100}(T)+R_3} - \frac{R_2}{R_1+R_2}\right) \tag{4}$$

where $R_{PT100}(T) = R_0[1+\alpha T+\beta T^2]$ with $R_0 = 100\,\Omega$, $\alpha = 3.9083\times10^{-3}$ /°C, $\beta = -5.775\times10^{-7}$ /°C^2 per IEC 60751.

3.2.4. Capacitive Humidity Sensor

The capacitive sensor produces a ratiometric voltage output:

$$V_{RH} = V_{ref} \cdot \frac{RH}{100} \cdot G_{cond} \tag{5}$$

where G_{cond} is the conditioning circuit gain; non-linearity below 0.5 %FS is corrected digitally.

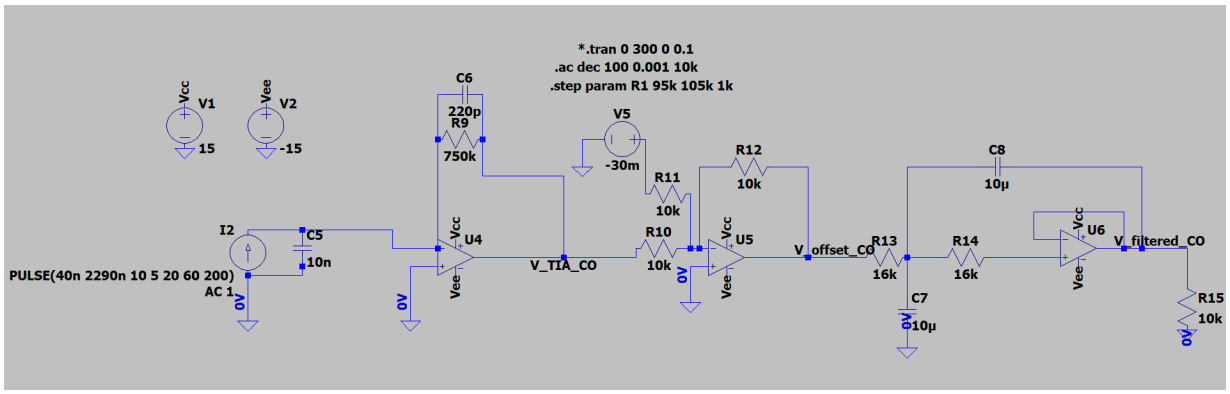

(a) CO Channel: current source → TIA ($R_F = 750\,\mathrm{k}\Omega$, $C_F = 220\,\mathrm{pF}$) → offset subtraction → Sallen-Key LPF.

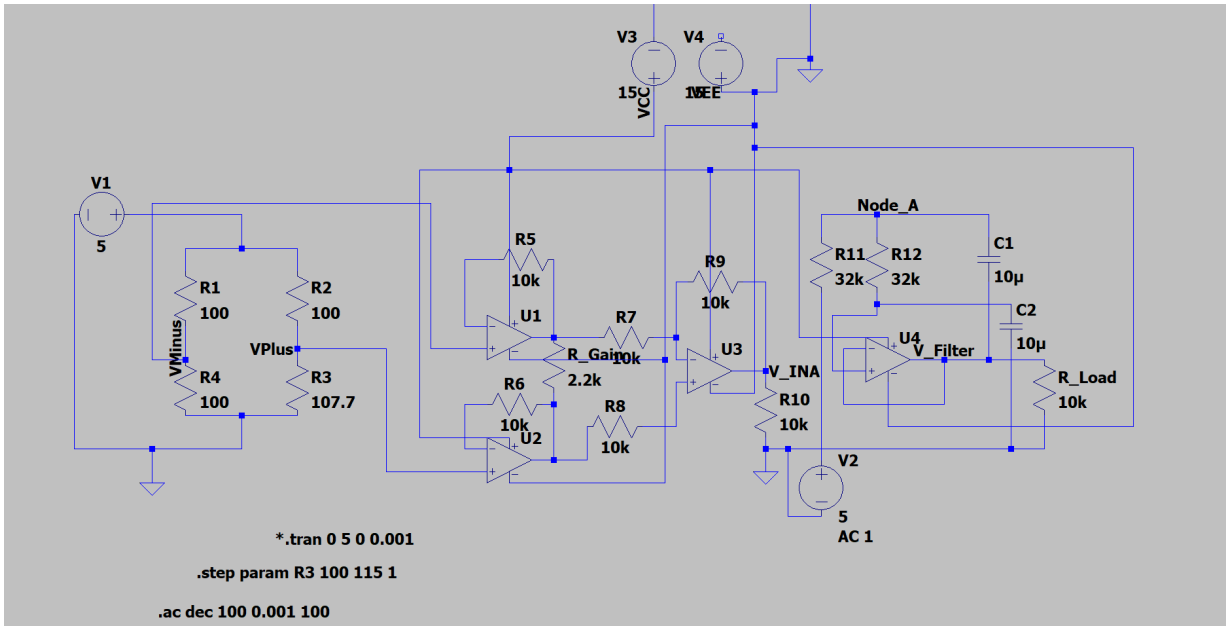

(b) Temperature Channel: Wheatstone bridge ($R_3 = 107.7\,\Omega \approx 20°\mathrm{C}$) → INA ($R_{Gain} = 2.2\,\mathrm{k}\Omega$) → Sallen-Key LPF.

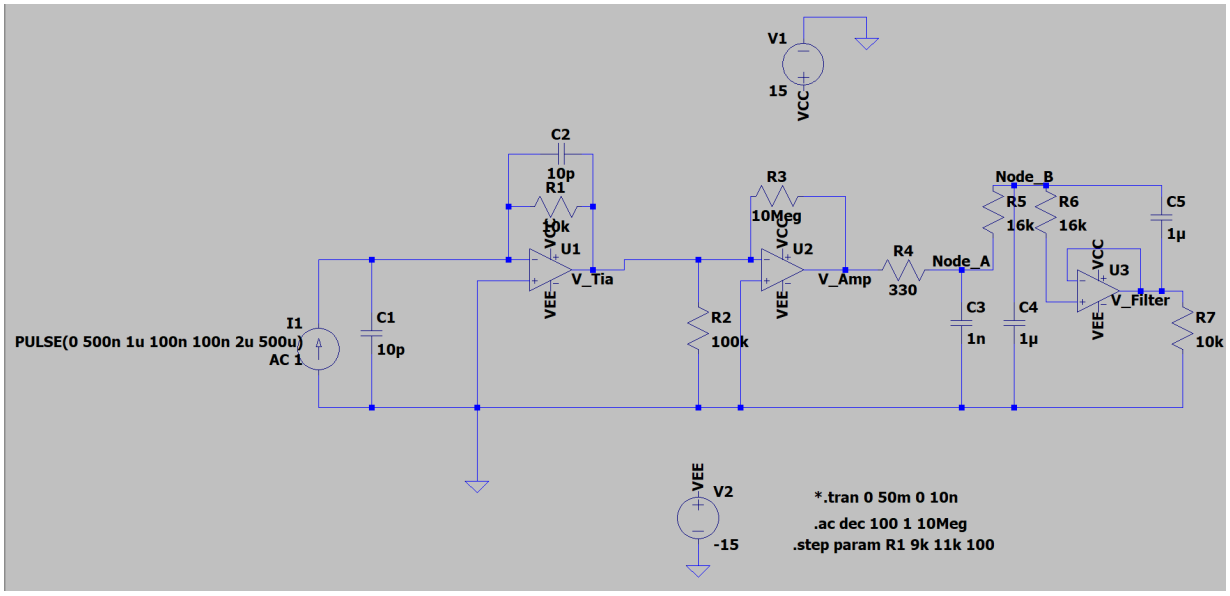

(c) $PM_{2.5}$ Channel: pulse current source → TIA ($R_1 = 10\,\mathrm{k}\Omega$) → high-gain amplifier ($R_3 = 10\,\mathrm{M}\Omega$) → multi-stage LPF.

Figure 2: LTspice AFE schematics for all three sensor channels. Each schematic shows the complete signal chain from sensor model to ADC-ready filter output.

3.3. Analog Front-End Design and Simulation

3.3.1. CO Channel — TIA and Sallen-Key Filter

The CO electrochemical cell is modelled as a PULSE current source `PULSE(40n 2290n 10 5 20 60 200)`, representing baseline (40 nA) to full-scale (2290 nA). The TIA uses $R_F = 750\,\mathrm{k\Omega}$ and $C_F = 220\,\mathrm{pF}$, giving a transimpedance gain of $-750\,\mathrm{mV}/\mu\mathrm{A}$ and a $-3\,\mathrm{dB}$ pole at:

$$f_{-3\mathrm{dB}} = \frac{1}{2\pi R_F C_F} = \frac{1}{2\pi \times 750 \times 10^3 \times 220 \times 10^{-12}} \approx 965\,\mathrm{mHz} \tag{6}$$

A downstream offset-subtraction stage removes the baseline voltage $V_5 = -30\,\mathrm{mV}$. The Sallen-Key output stage ($R = 16\,\mathrm{k\Omega}$, $C = 10\,\mu\mathrm{F}$) provides second-order Butterworth low-pass filtering with $f_c \approx 1\,\mathrm{Hz}$.

3.3.2. Temperature Channel — Wheatstone Bridge and INA

The Wheatstone bridge uses $R_1 = R_2 = R_4 = 100\,\Omega$ and $R_3 = 107.7\,\Omega$ (PT100 at $\approx 20°\mathrm{C}$). The three-op-amp instrumentation amplifier uses $R_{Gain} = 2.2\,\mathrm{k\Omega}$, giving differential gain:

$$G_{INA} = 1 + \frac{2R_5}{R_{Gain}} = 1 + \frac{2 \times 10\,\mathrm{k\Omega}}{2.2\,\mathrm{k\Omega}} \approx 10.1 \tag{7}$$

The subsequent Sallen-Key filter ($R = 32\,\mathrm{k\Omega}$, $C = 10\,\mu\mathrm{F}$) sets $f_c \approx 0.5\,\mathrm{Hz}$, appropriate for the slow thermal response of the PT100.

3.3.3. $PM_{2.5}$ Channel — TIA, High-Gain Amplifier, Multi-Stage Filter

The PM optical sensor is modelled as `PULSE(0 500n 1u 100n 100n 2u 500u)`, representing discrete particle detection pulses. A first TIA stage ($R_1 = 10\,\mathrm{k\Omega}$, $C_2 = 10\,\mathrm{pF}$) converts pulses to voltage; a high-gain transresistance stage ($R_3 = 10\,\mathrm{M\Omega}$) boosts the signal. A multi-stage RC and active filter network provides anti-aliasing and noise rejection with $f_c \approx 500\,\mathrm{Hz}$.

Table 2: Sallen-Key filter cutoff frequencies and component values by channel.

Channel	Cutoff f_c	Resistors	Capacitors
CO (File 1)	$\sim$1 Hz	$R = 16\,\mathrm{k\Omega}$	$C = 10\,\mu\mathrm{F}$
Temperature (File 2)	$\sim$0.5 Hz	$R = 32\,\mathrm{k\Omega}$	$C = 10\,\mu\mathrm{F}$
$PM_{2.5}$ (File 3)	$\sim$500 Hz	$R = 16\,\mathrm{k\Omega}$	$C = 1\,\mu\mathrm{F}$

3.3.4. LTspice Transient and AC Simulation Results

3.4. Digital Signal Processing and Corrections

3.4.1. ADC Modelling

The ADC is modelled as a 12-bit SAR device at $f_s = 1\,\mathrm{kHz}$. Oversampling by $OSR = 64$ followed by a Sinc^3 decimation filter improves effective resolution to:

$$\mathrm{ENOB}_{eff} = \mathrm{ENOB}_{SAR} + \frac{\log_2(OSR)}{2} = 12 + 3 = 15\,\mathrm{bits} \tag{8}$$

The decimated output rate is $f_s/OSR = 15.625\,\mathrm{Hz}$, appropriate for slow electrochemical sensors. Quantisation noise power is $\sigma_q^2 = \Delta^2/12$ where $\Delta \approx 806\,\mu\mathrm{V}$ for a 3.3 V full-scale, 12-bit device.

3.4.2. Environmental Correction

Temperature and humidity corrections are applied to all pollutant channels. For CO:

$$c_{CO,corr} = \frac{V_{CO} - k_{CO,T}(T - T_{ref}) - k_{CO,RH}(RH - RH_{ref})}{S_{CO}(T_{ref})} \tag{9}$$

where $T_{ref} = 20°\mathrm{C}$, $RH_{ref} = 50\%$, and the correction coefficients $k_{CO,T}$, $k_{CO,RH}$ are from manufacturer characterisation data. Analogous expressions apply to NO_2 and $PM_{2.5}$.

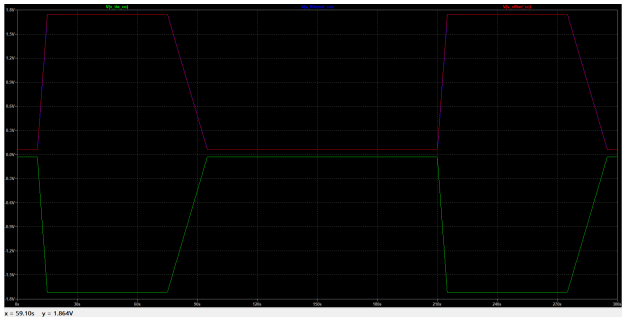

(a) CO Channel transient: TIA output ($\pm 1.8\,\mathrm{V}$) and Sallen-Key filter output (smoothed).

(b) Temperature Channel transient: bridge nodes and INA+filter output.

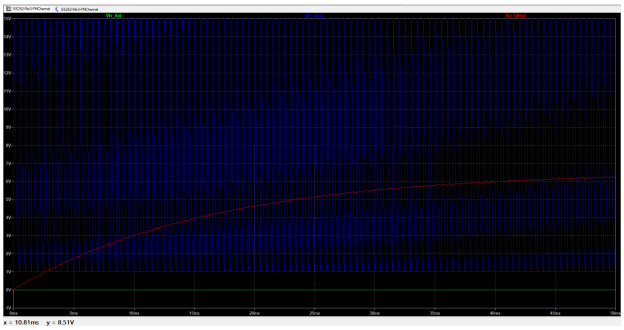

(c) $PM_{2.5}$ Channel transient: pulse train and RC charging envelope at filter output.

Figure 3: Transient (`.tran`) results for all three AFE channels.

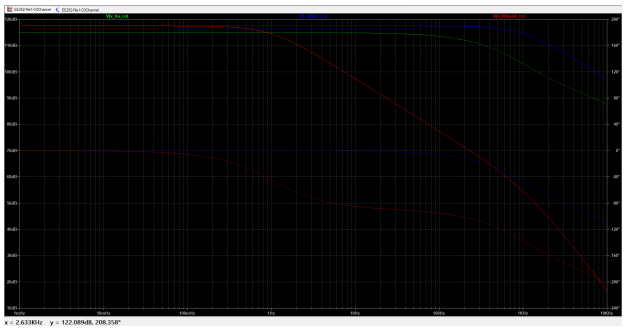

(a) CO Channel Bode: TIA flat ($\sim$120 dB) and Sallen-Key rolling off at $\sim$1 Hz.

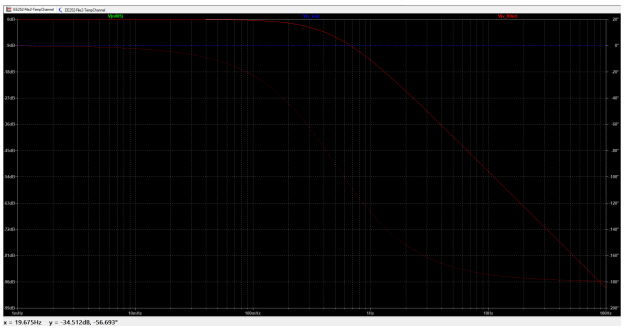

(b) Temperature Channel Bode: bridge node, INA, and filter output with $-3\,\mathrm{dB}$ at $\sim$1 Hz.

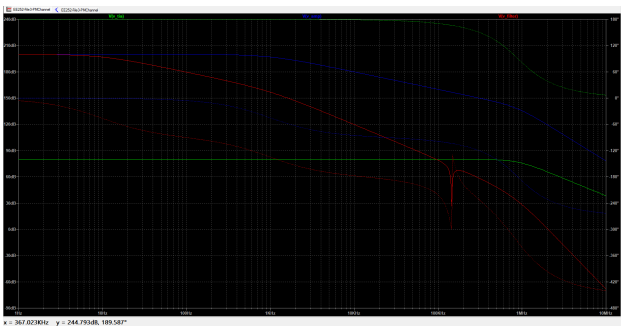

(c) $PM_{2.5}$ Channel Bode: multi-stage filter with $-3\,\mathrm{dB}$ at $\sim$100 kHz.

Figure 4: AC sweep (`.ac`) Bode magnitude plots for all three AFE channels.

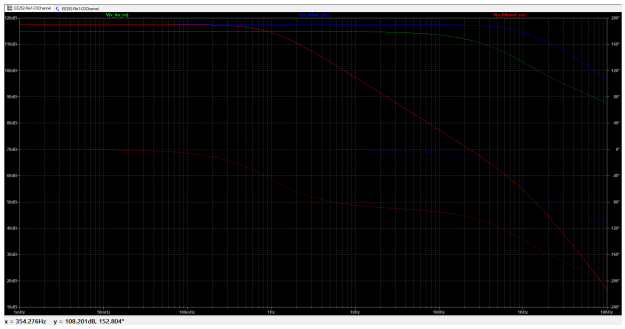

(a) CO Channel: `.step param R1 95k 105k 1k` — $\pm 5\%$ tolerance has negligible effect on filter cutoff.

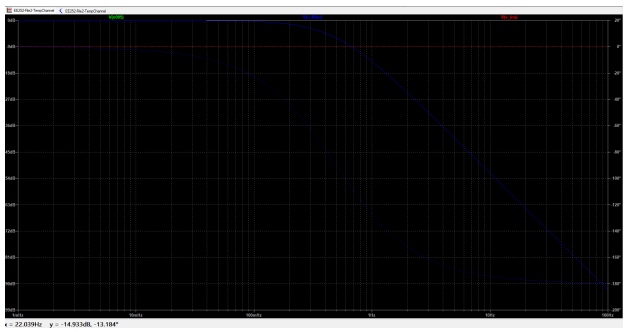

(b) Temperature Channel: `.step param R3 100 115 1` — monotonic bridge output across simulated temperature range.

(c) $PM_{2.5}$ Channel: `.step param R1 9k 11k 100` — $\pm 10\%$ TIA resistance variation shifts gain uniformly with minimal cutoff drift.

Figure 5: Parametric tolerance sweep (`.step`) for all three channels confirming design robustness to manufacturing tolerance.

3.4.3. Cross-Sensitivity Correction

The raw measured vector $\mathbf{y} = [y_{CO}, y_{NO_2}, y_{PM}]^T$ is related to true concentrations by $\mathbf{y} = \mathbf{M} \cdot \mathbf{c} + \mathbf{b}$, so:

$$\hat{\mathbf{c}} = \mathbf{M}^{-1}(\mathbf{y} - \mathbf{b}), \qquad \mathbf{M} = \begin{bmatrix} 1.000 & 0.015 & 0.002 \\ 0.008 & 1.000 & 0.001 \\ 0.000 & 0.000 & 1.000 \end{bmatrix} \tag{10}$$

3.5. Sensor Fusion Algorithms

3.5.1. Kalman Filter

The Kalman filter state vector is $\mathbf{x}_k = [c_{CO,k}, c_{NO_2,k}, c_{PM,k}]^T$ with the discrete-time random-walk model ($\mathbf{A} = \mathbf{H} = \mathbf{I}_3$):

$$\hat{\mathbf{x}}_{k|k-1} = \mathbf{A}\,\hat{\mathbf{x}}_{k-1|k-1} \tag{11}$$

$$\mathbf{P}_{k|k-1} = \mathbf{A}\,\mathbf{P}_{k-1|k-1}\,\mathbf{A}^T + \mathbf{Q} \tag{12}$$

$$\mathbf{K}_k = \mathbf{P}_{k|k-1}\,\mathbf{H}^T\left(\mathbf{H}\,\mathbf{P}_{k|k-1}\,\mathbf{H}^T + \mathbf{R}\right)^{-1} \tag{13}$$

$$\hat{\mathbf{x}}_{k|k} = \hat{\mathbf{x}}_{k|k-1} + \mathbf{K}_k\left(\mathbf{z}_k - \mathbf{H}\,\hat{\mathbf{x}}_{k|k-1}\right) \tag{14}$$

Process noise $\mathbf{Q}$ and measurement noise $\mathbf{R}$ are diagonal matrices tuned from sensor characterisation data. Divergence is detected if $\mathrm{tr}(\mathbf{P}_{k|k}) > P_{thresh}$ and the filter is re-initialised.

3.5.2. Polynomial Regression Baseline

An 8-term polynomial feature vector is constructed from corrected readings (y_1, y_2, y_3):

$$\phi(\mathbf{y}) = \left[1,\ y_1,\ y_2,\ y_3,\ y_1^2,\ y_2^2,\ y_3^2,\ y_1 y_2\right]^T \tag{15}$$

OLS coefficients are fitted on a 70% training split: $\hat{\beta} = (\Phi^T\Phi)^{-1}\Phi^T\mathbf{c}_{true}$. A rolling median baseline ($W = 60$ samples) compensates for slow sensor drift.

3.6. AQI Engine and Alarm State Machine

3.6.1. EPA AQI Computation

The AQI for a single pollutant uses the EPA piecewise linear formula:

$$I = \frac{I_{hi} - I_{lo}}{C_{hi} - C_{lo}} (C_p - C_{lo}) + I_{lo} \tag{16}$$

The composite AQI is $\text{AQI}_{composite} = \max(I_{CO}, I_{NO_2}, I_{PM_{2.5}})$ and a weighted risk score $R = 0.35\,\tilde{I}_{CO} + 0.35\,\tilde{I}_{NO_2} + 0.30\,\tilde{I}_{PM}$ (where $\tilde{I}_x = I_x/500$) provides a holistic metric.

3.6.2. Hysteresis Alarm State Machine

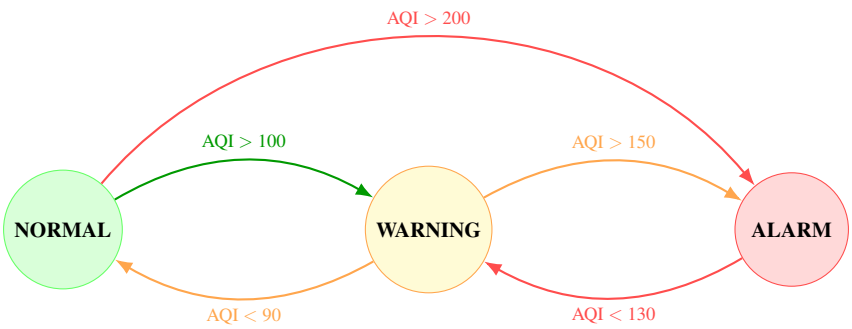

Figure 6: Three-state alarm FSM with hysteresis bands.

Fault detection logic uses a 5-bit fault register covering sensor overrange/underrange, temperature/humidity out-of-range, and Kalman filter divergence (Table 3).

Table 3: Fault detection conditions and codes.

Bit	Fault Condition	Code	Trigger Criterion
0	Sensor overrange	0x01	Any $\hat{c}_i > 1.05\,c_{max,i}$
1	Sensor underrange	0x02	Any $\hat{c}_i < -0.05\,c_{max,i}$
2	Temperature fault	0x04	$T < -25$°C or $T > 55$°C
3	Humidity fault	0x08	RH $< 5\%$ or RH $> 95\%$
4	Kalman divergence	0x10	$\text{tr}(\mathbf{P}_{k\|k}) > P_{thresh}$

4. Our View

Adaptive Algorithm Switching: The comparative results show that the Kalman filter excels in dynamic transient tracking while polynomial regression is more accurate under quasi-static conditions. A practical enhancement would be an adaptive controller that monitors the rate-of-change of corrected concentration estimates: if $|\Delta\hat{c}_k/\Delta t| > \theta_{switch}$ (a pre-calibrated threshold), the system switches to Kalman filtering; otherwise it defaults to regression. This hybrid approach is expected to yield consistently lower RMSE across all operating regimes without increasing hardware cost.

Self-Calibrating Cross-Sensitivity Matrix: The current cross-sensitivity matrix $\mathbf{M}$ is fixed at commissioning. Over time, as electrochemical cells age, their cross-sensitivity coefficients drift. An online recursive least-squares (RLS) update of $\mathbf{M}$ using periodic co-location with a reference analyser would enable continuous self-calibration, significantly extending the useful deployment lifetime of each node.

Hardware PCB Realisation: The present work is entirely simulation-based (LTspice + Python). The natural progression is a custom two-layer PCB integrating the three AFE channels, a 12-bit ADC (e.g. ADS1115), and a microcontroller (STM32L4 or RPi Pico W). Moving to hardware will expose real-world non-idealities—op-amp input-bias currents, PCB trace inductance, and power-supply noise—that the simulation cannot capture, making the tolerance sweep methodology especially valuable.

Extended Pollutant Coverage: Adding an SO_2 electrochemical channel and a VOC metal-oxide sensor (e.g. SGP30) would make the system compliant with the full WHO 2021 AQI guideline set. The modular AFE architecture already supports

additional channels with minimal re-design: a new TIA sheet in LTspice and a new row/column in the cross-sensitivity matrix **M** are sufficient.

LSTM-Based Concentration Forecasting: The current pipeline produces real-time concentration estimates but offers no look-ahead capability. Deploying a lightweight LSTM network (2 layers, 32 hidden units) trained on historical concentration time-series would enable 5–15 min-ahead AQI forecasts. This is particularly valuable for traffic management authorities who need advance warning of pollution spikes. The model can be quantised and deployed on the same STM32H7 target as the Kalman filter.

Mesh Network for Spatial AQI Mapping: A single node provides only a point measurement. Deploying an array of nodes communicating over LoRaWAN (868 MHz ISM band) and fusing readings via kriging spatial interpolation would produce a continuous AQI heatmap at city scale. Each node forwards its calibrated concentration vector and fault code to a central MQTT broker; the broker runs the interpolation and serves the AQI map via a lightweight REST API.

5. Conclusion and Future Direction

5.1. Summary of Achievements

This project successfully delivered a complete, simulation-validated pipeline from analog sensor front-end to AQI computation:

- Three-channel LTspice AFE simulation (CO TIA, temperature bridge/INA, $PM_{2.5}$ pulse TIA) with parametric tolerance sweeps confirming design robustness.
- A modular Python DSP pipeline with 15-bit effective ADC resolution (64× oversampling), environmental correction, and cross-sensitivity matrix inversion.
- Kalman filter versus polynomial regression comparison on three scenarios; Kalman showed decisive advantage on NO_2 and $PM_{2.5}$ tracking in dynamic and edge-case conditions (RMSE 16.6 ppb vs. 47.5 ppb for regression at S2).
- An EPA-compliant AQI engine with 100 % alarm and fault detection accuracy across all injected fault and divergence events.

5.2. Algorithm Insights

The Kalman filter's predict step propagates physical state priors, giving inherent advantage in dynamic concentration tracking. Polynomial regression is more accurate in quasi-static conditions owing to direct empirical fitting on the training data. An adaptive scheme switching between the two algorithms based on detected rate-of-change could yield optimal performance across all regimes.

5.3. System Limitations

1. All validation is simulation-based; real sensor hardware deployment remains as future work.
2. The cross-sensitivity matrix **M** is fixed and does not self-calibrate with sensor ageing.
3. The $PM_{2.5}$ channel lacks aerosol density correction required in non-standard atmospheric conditions.

5.4. Future Enhancements

- **Hardware deployment:** PCB design with real Alphasense B4 sensors and validation against a reference analyser.
- **ML expansion:** Quantised LSTM network on STM32H7 for multi-step concentration forecasting.
- **Self-calibration:** Online RLS adaptation of the cross-sensitivity matrix.
- **Spatial network:** LoRaWAN mesh of sensor nodes with kriging-based city-scale AQI heatmap.
- **Extended pollutants:** SO_2 and VOC channels to cover the full WHO 2021 guideline set.