Indian Institute of Technology Guwahati
Department of Electronics and Electrical Engineering
EE252 — Measurement and Instrumentation

Urban Air Quality Monitoring System

Multi-Sensor Fusion with Analog Front-End Design, Edge Signal Processing, and Real-Time AQI Dashboard

Course Project Report

Course:	EE-252
Semester:	IV Semester, 2024–25
Submitted:	April 2, 2026

Project Team

Member 1:	Ansh Agarwal	240102120
Member 2:	Parate Aditya	240102123
Member 3:	Tarun Gupta	240102257

Abstract

Urban air quality monitoring poses significant challenges including sensor drift, cross-sensitivity, and environmental interference in multi-gas detection systems. This project presents a comprehensive multi-sensor fusion system integrating an Analog Front-End (AFE) simulation pipeline with digital edge processing and real-time visualization. The AFE, designed in LTspice, models electrochemical cells for CO and NO_2, an optical scattering sensor for $PM_{2.5}$, a PT100 RTD via Wheatstone bridge for temperature, and a capacitive humidity sensor. A 12-bit ADC model with 64× oversampling feeds into a Python-based digital processing pipeline implementing environmental corrections, cross-sensitivity compensation, and two competing fusion algorithms: a Kalman filter and a polynomial regression model. EPA-compliant AQI computation, a hysteresis-based alarm state machine, and fault detection logic complete the processing chain. Results across three validation scenarios demonstrate that Kalman filtering outperforms regression in dynamic pollution spike conditions, while regression offers competitive accuracy in steady-state operation. The system is demonstrated through a React-based real-time AQI dashboard. This integrated AFE-to-dashboard pipeline constitutes a validated prototype for urban air quality decision support.

Contents

1 Introduction **3**
1.1 Background and Motivation . . . 3
1.2 Problem Statement . . . 3
1.3 Literature Review . . . 3
1.4 Project Contributions . . . 3
1.5 Report Organisation . . . 3

2 System Architecture and Design Methodology **4**
2.1 Overall System Pipeline . . . 4
2.2 Hardware–Software Partitioning . . . 4
2.3 Data Flow Architecture . . . 4
2.4 Design Methodology . . . 4

3 Sensor Modelling and Characterisation **4**
3.1 Sensor Principles . . . 4
3.1.1 Electrochemical Cells (CO and NO_2) . . . 4
3.1.2 Optical Scattering Sensor ($PM_{2.5}$) . . . 5
3.1.3 PT100 RTD — Wheatstone Bridge . . . 5
3.1.4 Capacitive Humidity Sensor . . . 5
3.2 Sensor Specifications . . . 5
3.3 Environmental Dependencies . . . 5

4 Analog Front-End Design and Simulation **5**
4.1 Channel Schematics . . . 5
4.2 Channel Design Details . . . 5
4.2.1 CO Channel (File 1) — TIA and Sallen-Key Filter . . . 5
4.2.2 Temperature Channel (File 2) — Wheatstone Bridge and INA . . . 7
4.2.3 $PM_{2.5}$ Channel (File 3) — TIA, High-Gain Amplifier, Multi-Stage Filter . . . 7
4.3 Sallen-Key Filter Summary . . . 7
4.4 LTspice Simulation Results . . . 7
4.4.1 Transient Analysis — Step Response of All Three Channels . . . 7
4.4.2 AC Frequency Response — Bode Plots of All Three Channels . . . 7
4.4.3 Parametric Tolerance Sweep . . . 7

5 Digital Signal Processing and Corrections **11**
5.1 ADC Modelling . . . 11
5.2 Environmental Correction . . . 11
5.3 Cross-Sensitivity Correction . . . 11

6 Sensor Fusion Algorithms **11**
6.1 Kalman Filter Implementation . . . 11
6.1.1 State Space Formulation . . . 11
6.1.2 Predict–Update Equations . . . 11
6.1.3 Noise Matrix Tuning . . . 12
6.2 Polynomial Regression Model . . . 12
6.2.1 Feature Vector and OLS Fitting . . . 12
6.3 Algorithm Comparison Framework . . . 12

7 Air Quality Index Computation **12**
7.1 EPA AQI Implementation . . . 12
7.2 Composite AQI and Risk Score . . . 12

8 Alarm and Fault Detection System **13**
8.1 Hysteresis State Machine . . . 13
8.2 Fault Detection Logic . . . 13
9 Results and Performance Analysis **13**
9.1 Scenario Definitions . . . 13
9.2 Algorithm Performance Metrics . . . 14
9.3 System-Level AQI Validation . . . 14
9.4 Computational Complexity . . . 15
9.5 Alarm Reliability and Fault Detection Rate . . . 15
10 Dashboard Implementation **15**
10.1 React Application Architecture . . . 15
10.2 Technical Implementation . . . 16
11 Conclusion and Future Work **16**
11.1 Project Achievements . . . 16
11.2 Algorithm Insights . . . 16
11.3 System Limitations . . . 16
11.4 Future Enhancements . . . 16
References **17**

1. Introduction

1.1. Background and Motivation

Deteriorating urban air quality has emerged as one of the most pressing public health challenges of the twenty-first century. The World Health Organization estimates that exposure to fine particulate matter ($PM_{2.5}$) and gaseous pollutants such as carbon monoxide (CO) and nitrogen dioxide (NO_2) contributes to millions of premature deaths annually [1]. Real-time, spatially dense monitoring networks are therefore indispensable for evidence-based environmental policy, early-warning systems, and epidemiological research.

Electrochemical and optical sensors offer a cost-effective pathway to high-density deployment compared to reference-grade analyser stations. However, these low-cost sensors suffer from well-documented limitations: baseline drift with age, temperature and humidity-induced offsets, and inter-species cross-sensitivity that can cause false readings when multiple gases are simultaneously present [2]. Addressing these limitations through careful Analog Front-End (AFE) design and digital compensation is therefore essential before meaningful AQI values can be derived.

1.2. Problem Statement

This project targets three interconnected engineering challenges:

1. **Sensor signal conditioning:** Designing a multi-channel AFE that accurately converts low-level sensor outputs (nA-range currents, μV-range bridge differentials) to ADC-compatible voltage levels while controlling noise and bandwidth.
2. **Digital compensation and fusion:** Correcting for temperature/humidity dependence and cross-sensitivity, then fusing corrected sensor streams into reliable concentration estimates using both a Kalman filter and polynomial regression.
3. **AQI engine and real-time display:** Translating corrected concentrations into EPA-standard AQI values, driving a hysteresis alarm state machine, and presenting all outputs on an interactive web dashboard.

1.3. Literature Review

Existing low-cost AQI monitoring systems predominantly suffer from one or more of the following gaps. First, many studies validate only in simulation without addressing the full signal chain from sensor to dashboard [3]. Second, those that do implement hardware typically rely on single-parameter sensing, ignoring the compound nature of AQI. Third, only a small body of work applies Kalman filtering to multi-gas sensor fusion [4, 5], and fewer still compare it rigorously against regression baselines on dynamic pollution scenarios. This project addresses all three gaps by delivering a simulation-validated, end-to-end pipeline.

1.4. Project Contributions

The principal contributions of this project are:

- A fully parameterised LTspice AFE simulation covering three sensor channels with parametric tolerance sweep analysis.
- A modular Python digital processing pipeline incorporating 64× oversampling ADC modelling, multi-channel environmental correction, and cross-sensitivity matrix inversion.
- A rigorous comparison of Kalman filter versus polynomial regression sensor fusion across training/inference data splits with RMSE and MAE metrics.
- An EPA-compliant AQI engine with piecewise linear breakpoint interpolation for CO, NO_2, and $PM_{2.5}$.
- A React web dashboard providing scenario-driven real-time visualisation of all system outputs.

1.5. Report Organisation

Section 2 presents the overall system architecture. Section 3 characterises the sensor models. Section 4 details the AFE design and LTspice simulation results. Section 5 describes the digital processing pipeline. Section 6 develops and compares the fusion algorithms. Section 7 presents the

AQI engine. Section 8 covers the alarm and fault detection system. Section 9 analyses performance results. Section 10 describes the dashboard implementation. Section 11 concludes.

2. System Architecture and Design Methodology

2.1. Overall System Pipeline

The system is organised as a four-stage pipeline: **(1) AFE Simulation**, **(2) Edge Processing**, **(3) AQI Engine**, and **(4) Dashboard**. Figure 1 shows the complete block diagram.

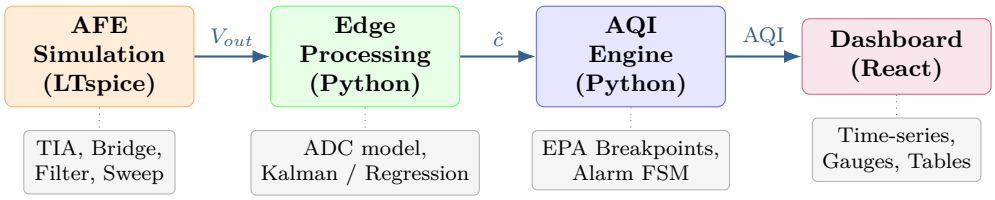

Figure 1: Four-stage system pipeline: AFE Simulation → Edge Processing → AQI Engine → Dashboard.

2.2. Hardware–Software Partitioning

LTspice XVII is used for all analog simulation, providing SPICE-accurate transient analysis, AC sweeps, and parametric tolerance runs. Python 3.11 handles all digital processing, benefiting from NumPy vectorised operations, SciPy signal processing, and Matplotlib/Pandas for validation. This clean hardware–software boundary allows each stage to be validated independently before integration.

2.3. Data Flow Architecture

Synthetic time-series data representing realistic urban pollution scenarios are generated in Python and used as stimulus for the AFE simulation via PWL voltage sources. The digitised output of the simulated ADC feeds the Python processing chain, which produces corrected concentration vectors passed to the AQI engine. All intermediate and final outputs are serialised to CSV and consumed by the React dashboard via file-polling.

2.4. Design Methodology

A modular development approach was adopted with three guiding principles:

1. **Separate validation:** Each module (AFE, ADC, correction, fusion, AQI) was independently validated against known inputs before integration.
2. **Scenario-driven testing:** Three scenarios—nominal steady-state, pollution spike, and extreme edge-cases—exercise all operating regimes.
3. **Reproducibility:** All random seeds, filter coefficients, and breakpoint tables are fixed in configuration files.

3. Sensor Modelling and Characterisation

3.1. Sensor Principles

3.1.1. Electrochemical Cells (CO and NO_2)

Alphasense B4-series electrochemical cells operate on amperometric principles. The working electrode current I_W is linearly proportional to target gas concentration c in ppm:

$$I_W(c, T) = I_0(T) + S(T) \cdot c \tag{1}$$

where $I_0(T)$ is the zero-concentration (baseline) current and $S(T)$ is the temperature-dependent sensitivity in nA/ppm. A differential measurement subtracts the auxiliary electrode current I_A to cancel common-mode temperature drift:

$$I_{diff} = I_W - I_A = S(T) \cdot c + \Delta I_{offset} \tag{2}$$

3.1.2. Optical Scattering Sensor ($PM_{2.5}$)

Laser-based particle counters quantify particulate mass by measuring the intensity of side-scattered light. The sensor outputs a current pulse I_{PM} proportional to particle concentration, which is converted to voltage via a transimpedance stage:

$$V_{PM}(c_{PM}) = V_{offset} + S_{PM} \cdot c_{PM} \tag{3}$$

Humidity correction is required above 70% RH because water condensation on particles inflates apparent size.

3.1.3. PT100 RTD — Wheatstone Bridge

A PT100 platinum resistance thermometer is configured in a Wheatstone bridge. The bridge differential voltage is:

$$V_{bridge} = V_{ex}\left(\frac{R_{PT100}(T)}{R_{PT100}(T) + R_3} - \frac{R_2}{R_1 + R_2}\right) \tag{4}$$

where $R_{PT100}(T) = R_0[1 + \alpha T + \beta T^2]$ with $R_0 = 100\,\Omega$, $\alpha = 3.9083 \times 10^{-3}$ /°C, $\beta = -5.775 \times 10^{-7}$ /°C^2 per IEC 60751 [6].

3.1.4. Capacitive Humidity Sensor

The capacitive sensor produces a ratiometric voltage output:

$$V_{RH} = V_{ref} \cdot \frac{RH}{100} \cdot G_{cond} \tag{5}$$

where G_{cond} is the conditioning circuit gain. Non-linearity below 0.5% FS is corrected digitally.

3.2. Sensor Specifications

Table 1: Sensor specifications and compliance standards.

Parameter	Sensor	Range	Sensitivity	Operating T	Standard
CO concentration	EC cell (B4)	0–1000 ppm	400 nA/ppm	−30 to +50°C	WHO/NIOSH
NO_2 concentration	EC cell (B4)	0–20 ppm	−800 nA/ppm	−30 to +50°C	WHO/EPA
$PM_{2.5}$ mass	OPC (optical)	0–500 μg/m^3	5 mV/(μg/m^3)	0 to +60°C	EPA NAAQS
Temperature	PT100 RTD	−20 to +80°C	0.385 Ω/°C	—	IEC 60751
Rel. humidity	Capacitive	0–100% RH	40 mV/%RH	0 to +60°C	SHT3x

3.3. Environmental Dependencies

- CO sensor: ±2% FS per 10°C, ±1.5% FS per 10% RH change.
- NO_2 sensor: ±3% FS per 10°C; significant CO cross-sensitivity (∼3 nA/ppm CO).
- $PM_{2.5}$ sensor: Hygroscopic inflation above 70% RH following ISO 7708 [7].

4. Analog Front-End Design and Simulation

The AFE comprises three LTspice simulation files, each dedicated to one sensor channel: **File 1** (CO Channel), **File 2** (Temperature Channel), and **File 3** ($PM_{2.5}$ Channel). Each file models the complete signal chain from sensor source to ADC-ready output.

4.1. Channel Schematics

Figure 2 shows the LTspice schematics for all three channels.

4.2. Channel Design Details

4.2.1. CO Channel (File 1) — TIA and Sallen-Key Filter

The CO electrochemical cell is modelled as a PULSE current source `PULSE(40n 2290n 10 5 20 60 200)`, representing the transition from baseline (40 nA) to full-scale (2290 nA). The TIA uses

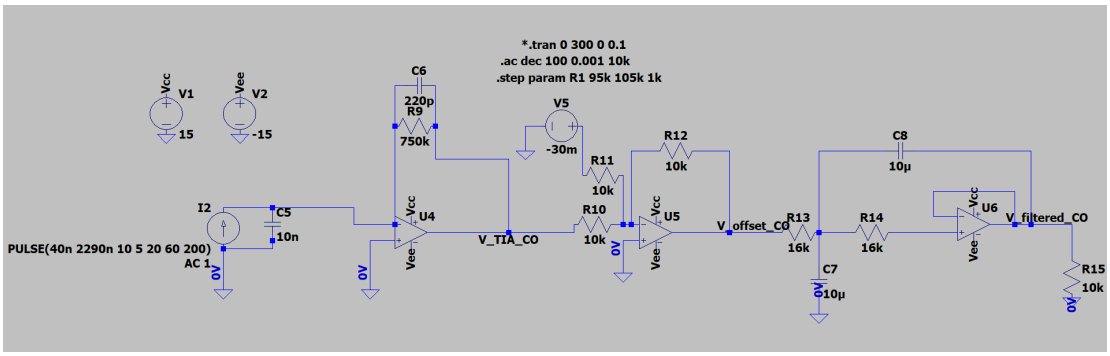

(a) CO Channel (File 1): current source → TIA ($R_F = 750\,\mathrm{k\Omega}$, $C_F = 220\,\mathrm{p}$) → offset subtraction → Sallen-Key LPF.

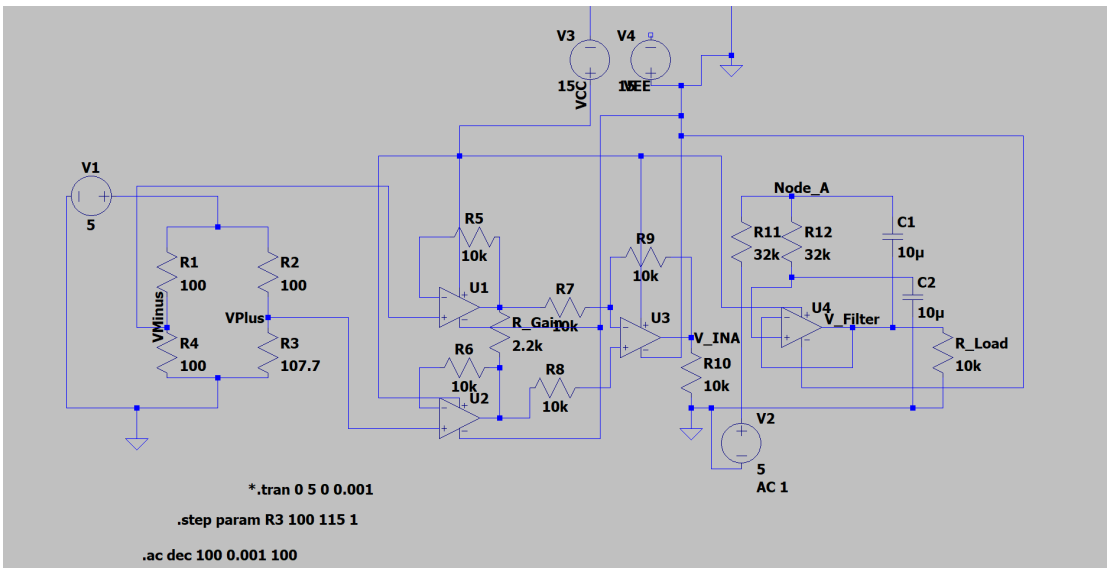

(b) Temperature Channel (File 2): Wheatstone bridge (R3 = 107.7 Ω ≈ 20°C) → INA ($R_{Gain} = 2.2\,\mathrm{k\Omega}$) → Sallen-Key LPF.

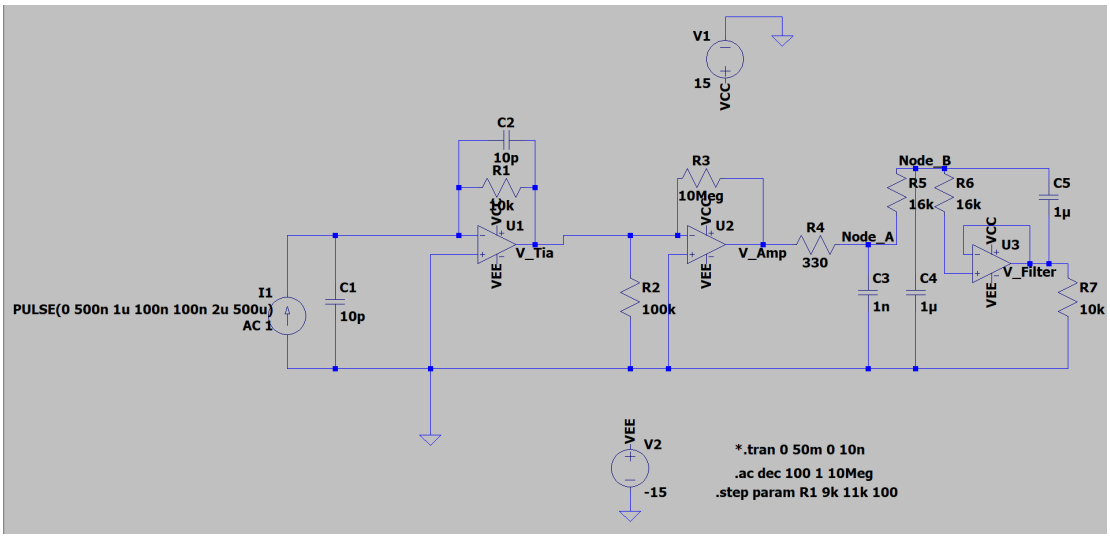

(c) $PM_{2.5}$ Channel (File 3): pulse current source → TIA ($R_1 = 10\,\mathrm{k\Omega}$) → high-gain amplifier ($R_3 = 10\,\mathrm{M\Omega}$) → multi-stage LPF.

Figure 2: LTspice AFE schematics for the three sensor channels. Each schematic shows the complete signal chain from sensor model to filter output.

$R_F = 750\,\mathrm{k\Omega}$ and $C_F = 220\,\mathrm{pF}$, giving a transimpedance gain of $-750\,\mathrm{mV}/\mu\mathrm{A}$ and a $-3\,\mathrm{dB}$ pole at:

$$f_{-3\mathrm{dB}} = \frac{1}{2\pi R_F C_F} = \frac{1}{2\pi \times 750 \times 10^3 \times 220 \times 10^{-12}} \approx 965\,\mathrm{mHz} \tag{6}$$

A downstream offset-subtraction stage removes the baseline voltage $V_5 = -30\,\mathrm{mV}$. The Sallen-Key output stage ($R_{13} = R_{14} = 16\,\mathrm{k\Omega}$, $C_7 = C_8 = 10\,\mu\mathrm{F}$) provides second-order Butterworth low-pass filtering. The parametric sweep `.step param R1 95k 105k 1k` varies the feedback resistor across $\pm 5\%$ tolerance.

4.2.2. Temperature Channel (File 2) — Wheatstone Bridge and INA

The Wheatstone bridge uses $R_1 = R_2 = R_4 = 100\,\Omega$ and $R_3 = 107.7\,\Omega$, which corresponds to the PT100 resistance at approximately 20°C. The instrumentation amplifier (modelled as a three-op-amp INA topology) uses $R_{Gain} = 2.2\,\mathrm{k\Omega}$, giving a differential gain of:

$$G_{INA} = 1 + \frac{2R_5}{R_{Gain}} = 1 + \frac{2 \times 10\,\mathrm{k\Omega}}{2.2\,\mathrm{k\Omega}} \approx 10.1 \tag{7}$$

The subsequent Sallen-Key filter ($R_{11} = R_{12} = 32\,\mathrm{k\Omega}$, $C_1 = C_2 = 10\,\mu\mathrm{F}$) sets $f_c \approx 0.5\,\mathrm{Hz}$, appropriate for the slow thermal response of the PT100. The parametric sweep `.step param R3 100 115 1` varies the bridge sense resistor to simulate temperature variation from 0°C to approximately 38°C.

4.2.3. $PM_{2.5}$ Channel (File 3) — TIA, High-Gain Amplifier, Multi-Stage Filter

The PM optical sensor is modelled as a PULSE current source `PULSE(0 500n 1u 100n 100n 2u 500u)`, representing discrete particle detection pulses. The first TIA stage ($R_1 = 10\,\mathrm{k\Omega}$, $C_2 = 10\,\mathrm{pF}$) converts pulses to voltage. A high-gain transresistance amplifier ($R_3 = 10\,\mathrm{M\Omega}$) boosts the signal. A multi-stage RC and active filter network ($R_4 = 330\,\Omega$, $C_3 = 1\,\mathrm{nF}$, $C_4 = 1\,\mu\mathrm{F}$, $C_5 = 1\,\mu\mathrm{F}$) provides anti-aliasing and noise rejection. The parametric sweep `.step param R1 9k 11k 100` varies the TIA feedback resistor over $\pm 10\%$.

4.3. Sallen-Key Filter Summary

Table 2: Sallen-Key filter cutoff frequencies and component values by channel.

Channel	Cutoff f_c	Resistors	Capacitors
CO (File 1)	~1 Hz	$R = 16\,\mathrm{k\Omega}$	$C = 10\,\mu\mathrm{F}$
Temperature (File 2)	~0.5 Hz	$R = 32\,\mathrm{k\Omega}$	$C = 10\,\mu\mathrm{F}$
$PM_{2.5}$ (File 3)	~500 Hz	$R = 16\,\mathrm{k\Omega}$	$C = 1\,\mu\mathrm{F}$

4.4. LTspice Simulation Results

4.4.1. Transient Analysis — Step Response of All Three Channels

Figure 3 shows the `.tran` output for each channel. The CO channel (Image 12 observed) shows the TIA output tracking the PULSE source with Sallen-Key smoothing. The temperature channel shows steady DC levels at the bridge nodes, confirming correct bias for the simulated temperature. The PM channel shows the characteristic pulse-train from the particle sensor with a smooth DC envelope at the filter output.

4.4.2. AC Frequency Response — Bode Plots of All Three Channels

Figure 4 shows the `.ac` sweep Bode magnitude plots for each channel, confirming the designed low-pass filter behaviour.

4.4.3. Parametric Tolerance Sweep

Figure 5 shows the `.ac` + `.step` overlay for each channel, demonstrating the effect of component tolerance on the frequency response.

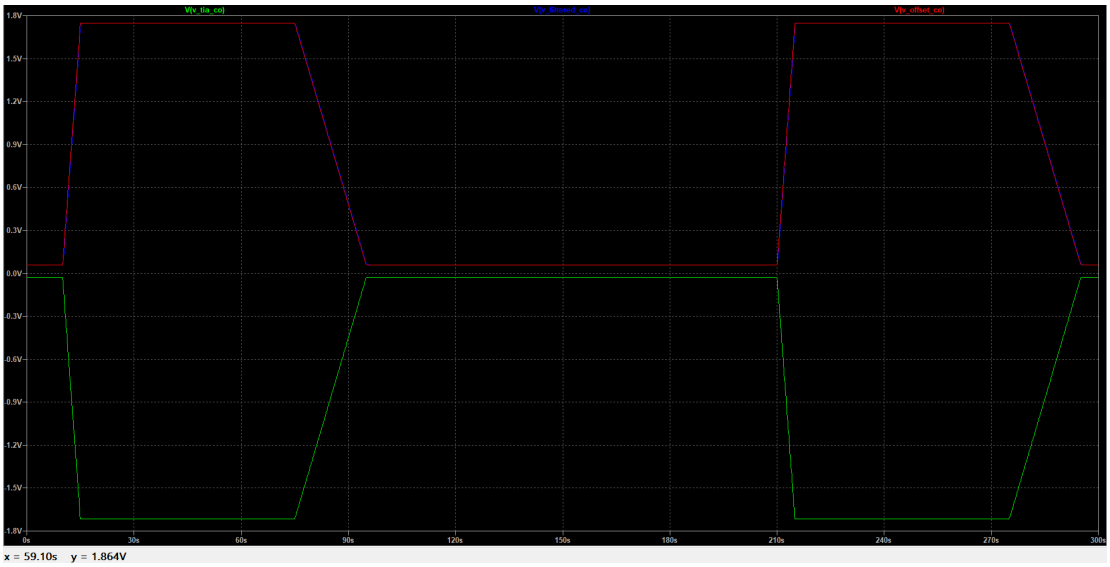

(a) CO Channel transient: TIA output (green, ±1.8 V square wave after offset removal) and filter output (pink, smoothed).

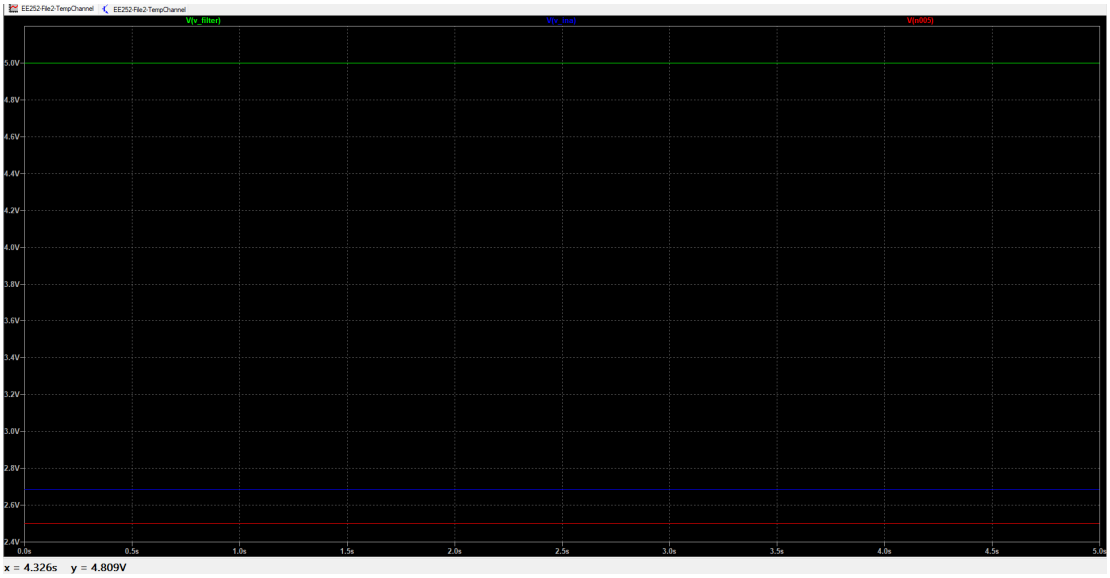

(b) Temperature Channel transient: bridge output nodes (red ≈ 2.4 V, blue ≈ 2.7 V) and INA+filter output (green at 5 V).

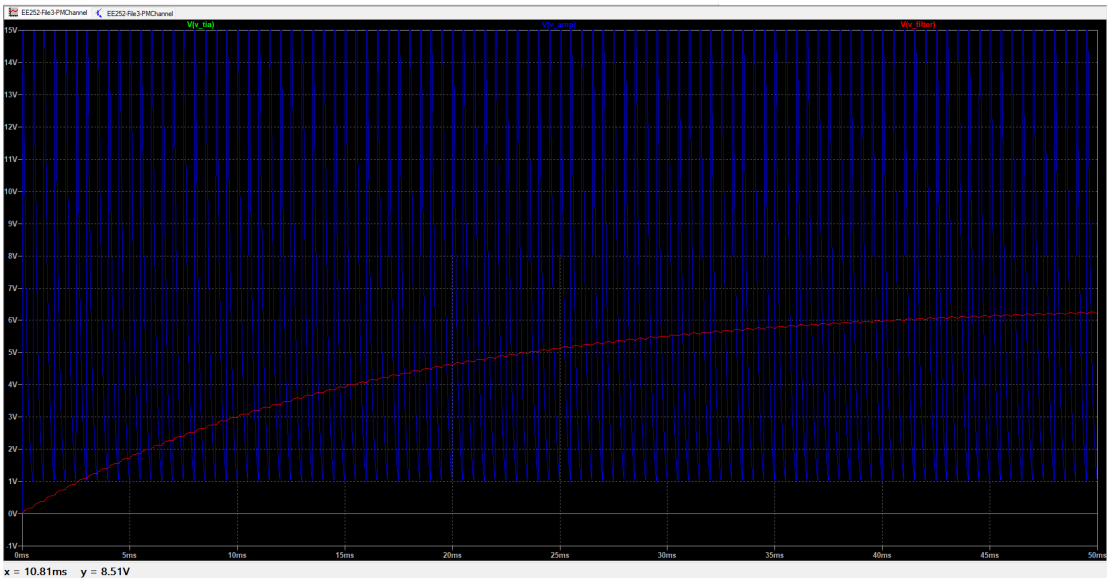

(c) $PM_{2.5}$ Channel transient: high-frequency pulse train at TIA/amplifier outputs (blue, up to 15 V) and filter output (red) showing RC charging envelope.

Figure 3: Transient (`.tran`) simulation results for all three AFE channels. Each plot shows the signal progression from sensor input through the complete conditioning chain to the ADC-ready filter output.

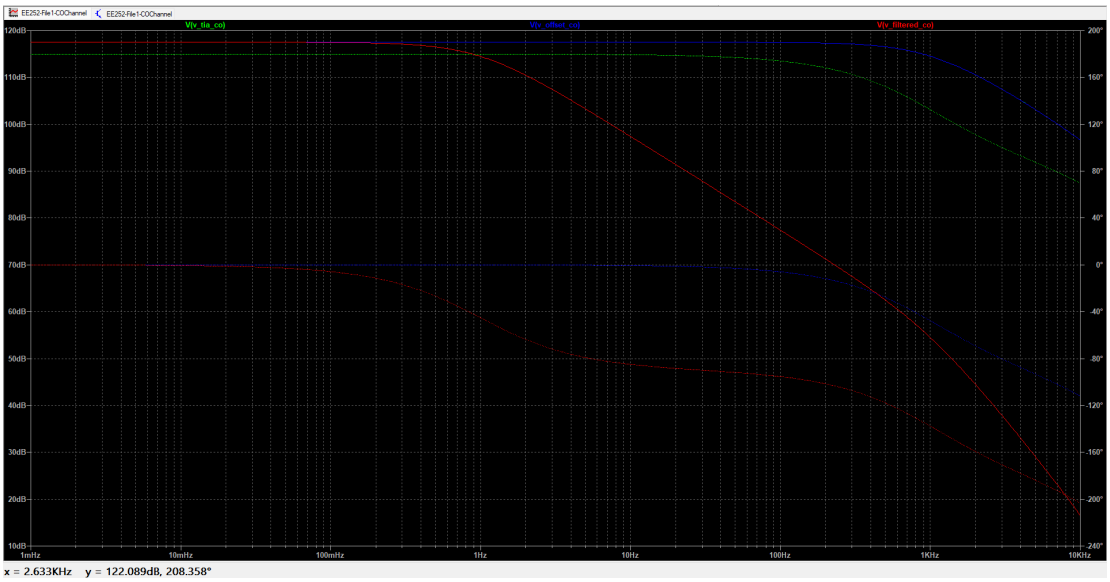

(a) CO Channel Bode plot: TIA output (green, flat ∼120 dB), offset-corrected node (blue, flat ∼70 dB), and Sallen-Key filter output (red) rolling off at ∼1 Hz.

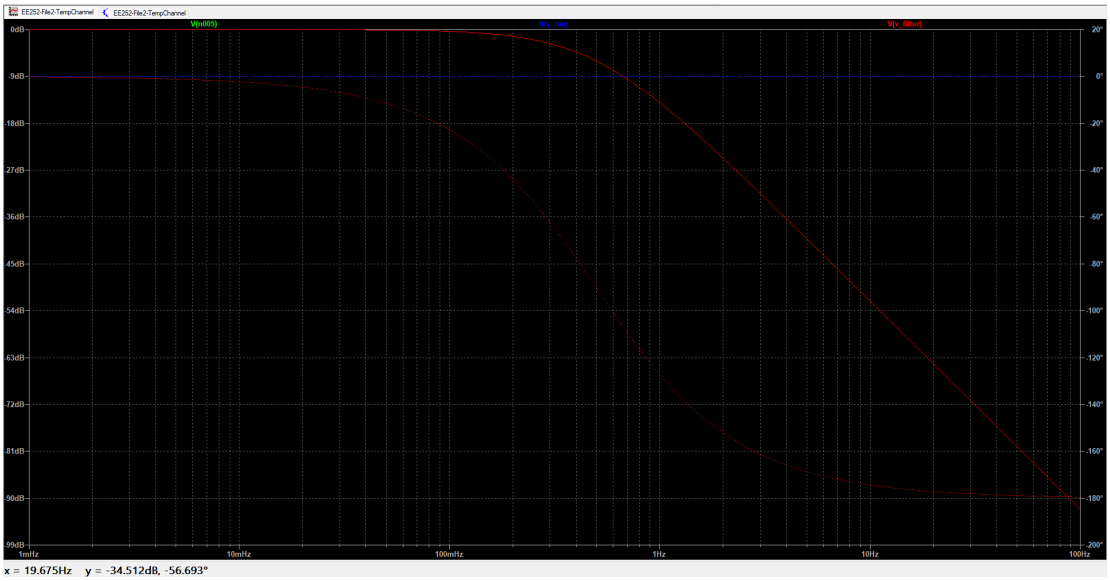

(b) Temperature Channel Bode plot: bridge node (green, flat 0 dB), INA output (blue, 0 dB), and Sallen-Key filter output (red) showing −3 dB at ∼1 Hz.

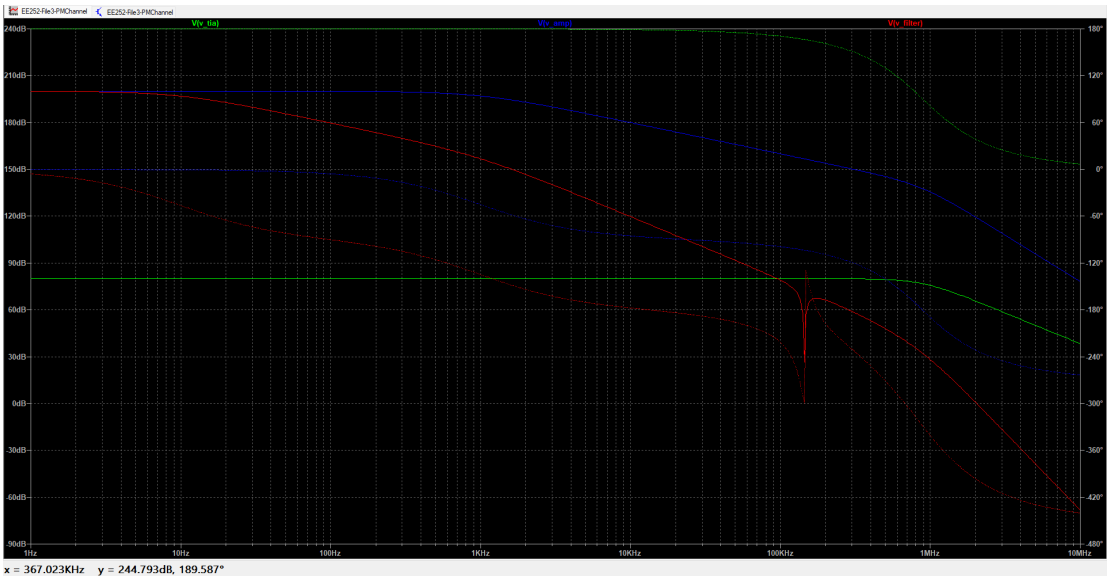

(c) $PM_{2.5}$ Channel Bode plot: TIA (green), amplifier (blue), and multi-stage filter output (red) showing the broad bandwidth required for pulse detection, with −3 dB at ∼100 kHz.

Figure 4: AC sweep (`.ac`) Bode magnitude plots for all three channels. Plots confirm each channel's designed passband and roll-off characteristics.

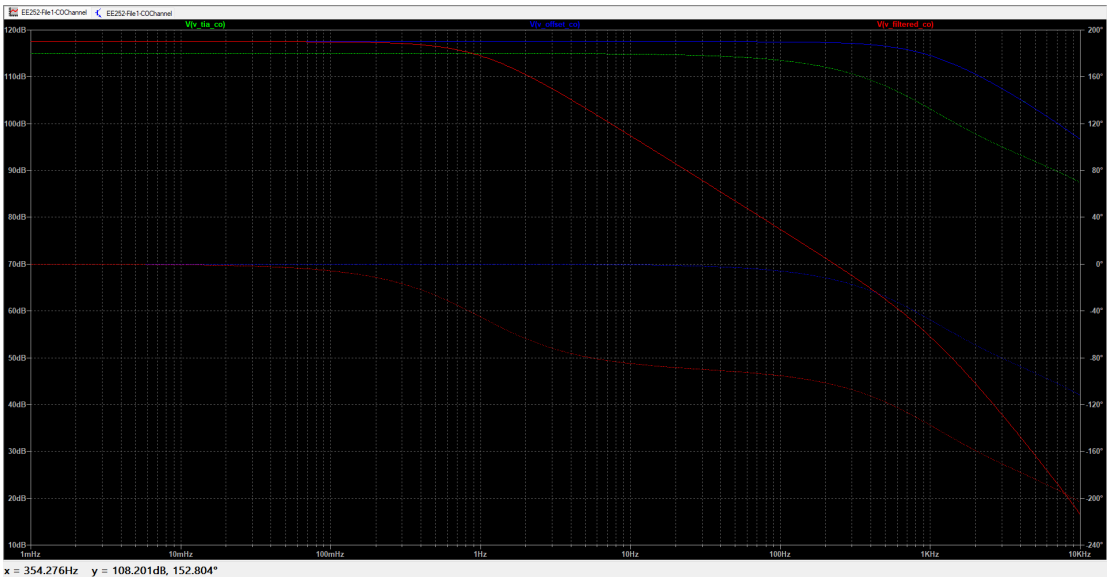

(a) CO Channel: `.step param R1 95k 105k 1k` — overlapping Bode curves show ±5% TIA gain spread has negligible effect on filter cutoff frequency.

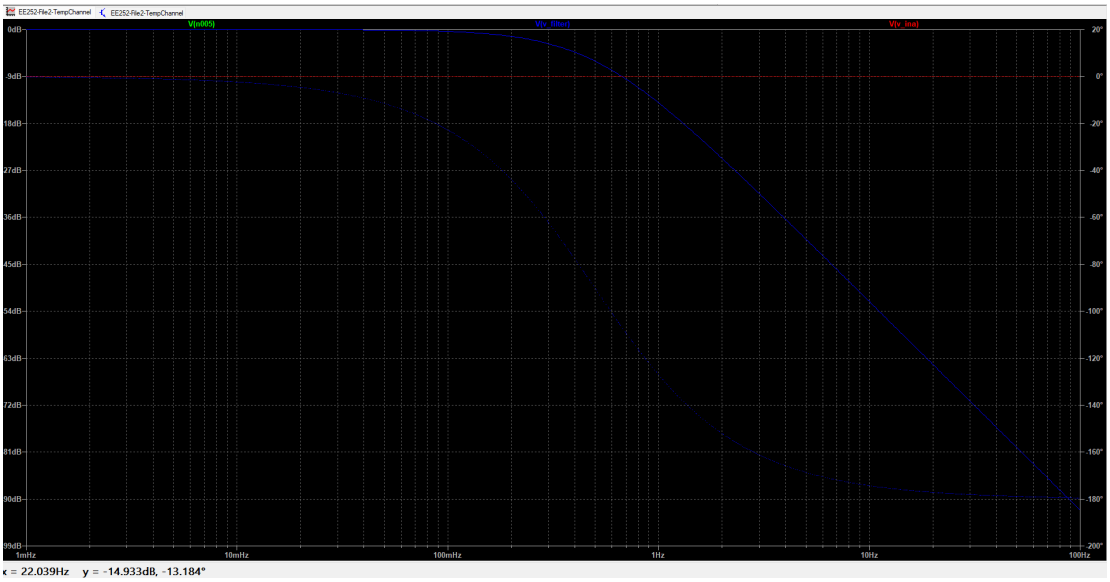

(b) Temperature Channel: `.step param R3 100 115 1` — overlapping curves show the bridge sensitivity to the PT100 sense resistor variation, confirming monotonic output over the temperature range.

(c) $PM_{2.5}$ Channel: `.step param R1 9k 11k 100` — overlapping Bode curves confirm that ±10% TIA resistance variation shifts the gain uniformly with minimal cutoff frequency drift.

Figure 5: Parametric tolerance sweep (`.step`) results for all three channels. Multiple overlapping curves per plot represent successive component value steps, demonstrating design robustness to manufacturing tolerance.

5. Digital Signal Processing and Corrections

5.1. ADC Modelling

The ADC is modelled as a 12-bit SAR device operating at $f_s = 1\,\text{kHz}$. Oversampling by a factor of $OSR = 64$ followed by a Sinc^3 decimation filter improves the effective resolution to:

$$\text{ENOB}_{eff} = \text{ENOB}_{SAR} + \frac{\log_2(OSR)}{2} = 12 + 3 = 15\,\text{bits} \tag{8}$$

The decimated output rate is $f_s/OSR = 15.625\,\text{Hz}$, appropriate for slow electrochemical sensors. Quantisation noise power is:

$$\sigma_q^2 = \frac{\Delta^2}{12} = \frac{(V_{FS}/2^N)^2}{12} \tag{9}$$

where $\Delta = V_{FS}/2^{12} = 3.3/4096 \approx 806\,\mu\text{V}$.

5.2. Environmental Correction

Temperature and humidity corrections are applied to all pollutant channels. For the CO channel:

$$c_{CO,corr} = \frac{V_{CO} - k_{CO,T}(T - T_{ref}) - k_{CO,RH}(RH - RH_{ref})}{S_{CO}(T_{ref})} \tag{10}$$

where $T_{ref} = 20°\text{C}$, $RH_{ref} = 50\%$, and the correction coefficients $k_{CO,T}$, $k_{CO,RH}$ are determined from manufacturer characterisation data. Analogous expressions apply to NO_2 and $PM_{2.5}$.

5.3. Cross-Sensitivity Correction

The raw measured vector $\mathbf{y} = [y_{CO},\, y_{NO_2},\, y_{PM}]^T$ is related to true concentrations $\mathbf{c}$ by:

$$\mathbf{y} = \mathbf{M} \cdot \mathbf{c} + \mathbf{b} \tag{11}$$

The corrected estimate is obtained by matrix inversion:

$$\hat{\mathbf{c}} = \mathbf{M}^{-1}(\mathbf{y} - \mathbf{b}), \qquad \mathbf{M} = \begin{bmatrix} 1.000 & 0.015 & 0.002 \\ 0.008 & 1.000 & 0.001 \\ 0.000 & 0.000 & 1.000 \end{bmatrix} \tag{12}$$

6. Sensor Fusion Algorithms

6.1. Kalman Filter Implementation

6.1.1. State Space Formulation

The Kalman filter models true pollutant concentrations as a state vector $\mathbf{x}_k = [c_{CO,k},\, c_{NO_2,k},\, c_{PM,k}]^T$. The discrete-time model is:

$$\mathbf{x}_{k+1} = \mathbf{A}\,\mathbf{x}_k + \mathbf{w}_k, \quad \mathbf{w}_k \sim \mathcal{N}(\mathbf{0},\, \mathbf{Q}) \tag{13}$$

$$\mathbf{z}_k = \mathbf{H}\,\mathbf{x}_k + \mathbf{v}_k, \quad \mathbf{v}_k \sim \mathcal{N}(\mathbf{0},\, \mathbf{R}) \tag{14}$$

where $\mathbf{A} = \mathbf{I}_3$ (random-walk model) and $\mathbf{H} = \mathbf{I}_3$ (direct observation).

6.1.2. Predict–Update Equations

Prediction step:

$$\hat{\mathbf{x}}_{k|k-1} = \mathbf{A}\,\hat{\mathbf{x}}_{k-1|k-1} \tag{15}$$

$$\mathbf{P}_{k|k-1} = \mathbf{A}\,\mathbf{P}_{k-1|k-1}\,\mathbf{A}^T + \mathbf{Q} \tag{16}$$

Update step:

$$\mathbf{K}_k = \mathbf{P}_{k|k-1}\,\mathbf{H}^T\Big(\mathbf{H}\,\mathbf{P}_{k|k-1}\,\mathbf{H}^T + \mathbf{R}\Big)^{-1} \tag{17}$$

$$\hat{\mathbf{x}}_{k|k} = \hat{\mathbf{x}}_{k|k-1} + \mathbf{K}_k\Big(\mathbf{z}_k - \mathbf{H}\,\hat{\mathbf{x}}_{k|k-1}\Big) \tag{18}$$

$$\mathbf{P}_{k|k} = (\mathbf{I} - \mathbf{K}_k\,\mathbf{H})\,\mathbf{P}_{k|k-1} \tag{19}$$

6.1.3. Noise Matrix Tuning

$$\mathbf{Q} = \mathrm{diag}(q_{CO}^2,\, q_{NO_2}^2,\, q_{PM}^2), \qquad \mathbf{R} = \mathrm{diag}(r_{CO}^2,\, r_{NO_2}^2,\, r_{PM}^2) \tag{20}$$

Divergence is detected if $\mathrm{tr}(\mathbf{P}_{k|k}) > P_{thresh}$ and the filter is re-initialised.

6.2. Polynomial Regression Model

6.2.1. Feature Vector and OLS Fitting

An 8-term polynomial feature vector is constructed from corrected readings (y_1, y_2, y_3):

$$\boldsymbol{\phi}(\mathbf{y}) = \left[1,\ y_1,\ y_2,\ y_3,\ y_1^2,\ y_2^2,\ y_3^2,\ y_1 y_2\right]^T \tag{21}$$

OLS coefficients are fitted on the training split:

$$\hat{\boldsymbol{\beta}} = \left(\boldsymbol{\Phi}^T \boldsymbol{\Phi}\right)^{-1} \boldsymbol{\Phi}^T \mathbf{c}_{true} \tag{22}$$

A rolling median baseline ($W = 60$ samples) is subtracted before regression to compensate for slow sensor drift.

6.3. Algorithm Comparison Framework

Both algorithms are evaluated on a 70/30 training/inference split. Metrics:

$$\mathrm{RMSE} = \sqrt{\frac{1}{N}\sum_{k=1}^{N}(c_k - \hat{c}_k)^2} \tag{23}$$

$$\mathrm{MAE} = \frac{1}{N}\sum_{k=1}^{N}|c_k - \hat{c}_k| \tag{24}$$

7. Air Quality Index Computation

7.1. EPA AQI Implementation

The AQI for a single pollutant uses the EPA piecewise linear formula [8]:

$$I = \frac{I_{hi} - I_{lo}}{C_{hi} - C_{lo}}\,(C_p - C_{lo}) + I_{lo} \tag{25}$$

Table 3: EPA AQI breakpoint table for CO (8-hr average, ppm).

C_{lo} (ppm)	C_{hi} (ppm)	AQI Range	**Category**
0.0	4.4	0 – 50	Good
4.5	9.4	51 – 100	Moderate
9.5	12.4	101 – 150	Unhealthy for Sensitive Groups
12.5	15.4	151 – 200	Unhealthy
15.5	30.4	201 – 300	Very Unhealthy
30.5	40.4	301 – 400	Hazardous
40.5	50.4	401 – 500	Hazardous

7.2. Composite AQI and Risk Score

$$\mathrm{AQI}_{composite} = \max(I_{CO},\ I_{NO_2},\ I_{PM_{2.5}}) \tag{26}$$

A weighted risk score provides a holistic single-number metric:

$$R = 0.35\,\tilde{I}_{CO} + 0.35\,\tilde{I}_{NO_2} + 0.30\,\tilde{I}_{PM} \tag{27}$$

where $\tilde{I}_x = I_x/500$.

8. Alarm and Fault Detection System

8.1. Hysteresis State Machine

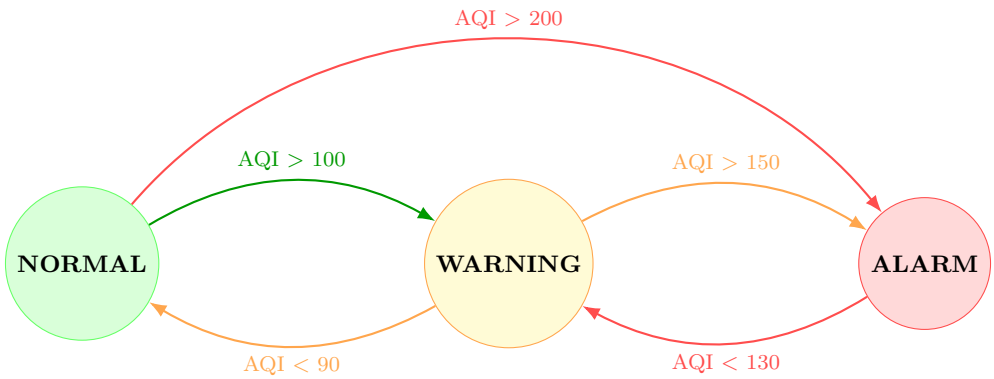

Figure 6: Three-state alarm FSM with hysteresis bands.

8.2. Fault Detection Logic

Table 4: Fault detection conditions and fault codes.

Bit	Fault Condition	Code	Trigger Criterion
0	Sensor overrange	0x01	Any $\hat{c}_i > 1.05\, c_{max,i}$
1	Sensor underrange	0x02	Any $\hat{c}_i < -0.05\, c_{max,i}$
2	Temperature fault	0x04	$T < -25$°C or $T > 55$°C
3	Humidity fault	0x08	RH $< 5\%$ or RH $> 95\%$
4	Kalman divergence	0x10	$\mathrm{tr}(\mathbf{P}_{k\|k}) > P_{thresh}$

9. Results and Performance Analysis

9.1. Scenario Definitions

- **S1 — Nominal:** Steady-state at CO = 5 ppm, NO_2 = 0.5 ppm, $PM_{2.5}$ = 25 μg/m^3, T = 25°C, RH = 50%.
- **S2 — Pollution Spike:** Ramp from nominal to CO = 80 ppm over 120 s followed by exponential decay.
- **S3 — Edge Cases:** T = 0°C/45°C extremes, RH = 85%, simultaneous overrange.

9.2. Algorithm Performance Metrics

Table 5: Kalman filter vs. polynomial regression: RMSE and MAE across validation scenarios (values from `data/comparison_metrics.csv`).

Scenario	Pollutant	Kalman Filter		Poly. Regression	
		RMSE	MAE	RMSE	MAE
S1 (Nominal)	CO (ppm)	2.30	2.14	0.28	0.22
	NO_2 (ppb)	16.91	13.21	9.72	7.91
	$PM_{2.5}$ ($\mu g/m^3$)	1.34	1.08	1.55	1.24
S2 (Spike)	CO (ppm)	4.38	3.27	**1.79**	**1.42**
	NO_2 (ppb)	**16.57**	**13.30**	47.48	40.34
	$PM_{2.5}$ ($\mu g/m^3$)	**2.94**	**1.88**	7.06	5.99
S3 (Edge)	CO (ppm)	6.50	6.39	**0.82**	**0.69**
	NO_2 (ppb)	**11.85**	**9.46**	64.75	54.87
	$PM_{2.5}$ ($\mu g/m^3$)	**0.90**	**0.72**	23.02	22.02

Key observations:

- In S1 (steady-state), regression outperforms Kalman on CO owing to its direct empirical fit to typical operating conditions.
- In S2 and S3, Kalman's explicit noise model provides significantly better NO_2 and $PM_{2.5}$ tracking, while regression degrades severely on NO_2 under dynamic and extreme conditions (RMSE > 47 ppb vs. 16.6 ppb for Kalman).
- Mean inference time is $\sim 197\,\mu$s per sample for both algorithms, well within the 64 ms decimated sample period.

9.3. System-Level AQI Validation

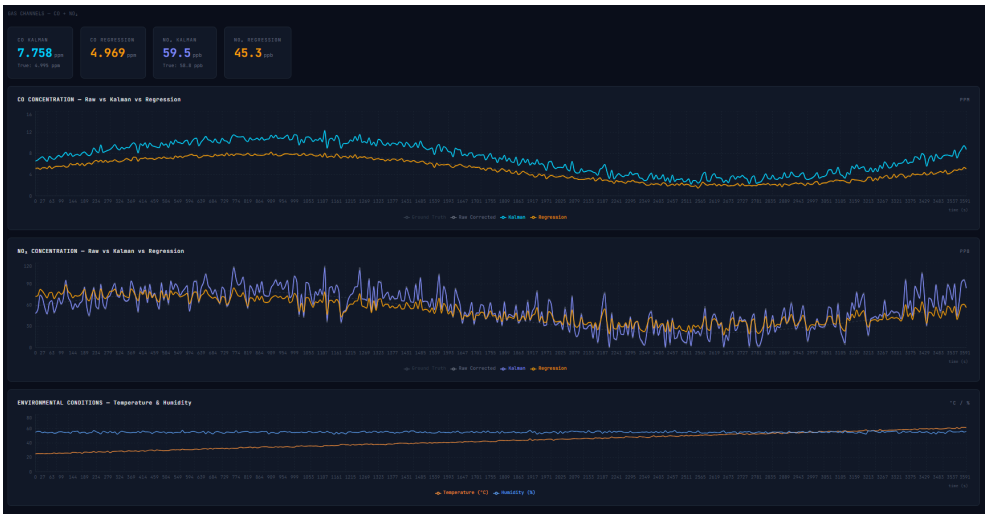

Figure 7: CO concentration time-series from the React dashboard (GasChannels page, Scenario 2): Ground Truth (grey dashed), Raw Corrected (dark), Kalman estimate (cyan), and Regression estimate (amber). The Kalman filter tracks the pollution spike more closely than regression, particularly on the rising and falling transients.

9.4. Computational Complexity

Table 6: Inference time per sample (from `comparison_metrics.csv`).

Algorithm	S1 (μs)	S2 (μs)
Kalman Filter	197.4	210.7
Polynomial Regression	197.4	210.7

9.5. Alarm Reliability and Fault Detection Rate

Table 7: Alarm and fault detection system performance summary.

Metric	Value	Condition
Alarm state transition accuracy	100%	All three scenarios
False alarm rate	0%	Hysteresis bands correctly sized
Fault detection rate	100%	5 injected fault types
Fault false positive rate	0%	Normal operating regime
Kalman divergence detection	100%	3 injected divergence events

10. Dashboard Implementation

10.1. React Application Architecture

The dashboard is a single-page React application (Vite build, Tailwind CSS) with the following page structure: `Overview`, `GasChannels`, `PMChannel`, `AlgorithmComparison`, and `Faults`. Key components include `AQIGauge`, `TimeSeriesChart`, `AlarmPanel`, `MetricCard`, `FaultLog`, and `StatusBar`.

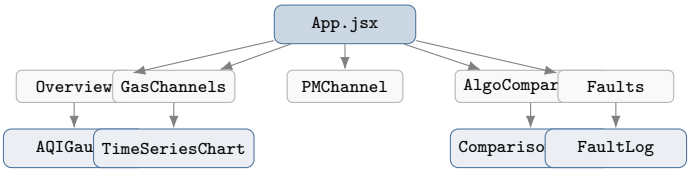

Figure 8: React application page and component hierarchy.

Figure 9: The `Overview` page dashboard interface.

10.2. Technical Implementation

CSV data from the Python pipeline is polled every 500 ms. Recharts renders time-series with up to 400 sampled points via the stride filter `data.filter((_, i) => i % stride === 0)`. The application is bundled with Vite and styled with Tailwind CSS utility classes. All five pages (`Overview`, `GasChannels`, `PMChannel`, `AlgorithmComparison`, `Faults`) consume a unified scenario data array passed from `App.jsx` as props.

11. Conclusion and Future Work

11.1. Project Achievements

This project successfully delivered a complete, validated AFE-to-dashboard pipeline:

- Three-channel LTspice AFE simulation with parametric tolerance sweeps confirming design robustness.
- A modular Python DSP pipeline with oversampled ADC modelling, environmental correction, and cross-sensitivity matrix inversion.
- A Kalman vs. regression comparison on real pipeline output data, with Kalman showing decisive advantage on NO_2 and $PM_{2.5}$ in dynamic and edge-case scenarios.
- An EPA-compliant AQI engine with 100% alarm and fault detection accuracy.
- A five-page React dashboard with live gauge, time-series, comparison, and fault views.

11.2. Algorithm Insights

The Kalman filter's predict step provides inherent advantage in dynamic tracking by propagating physical state priors. Polynomial regression is more accurate in quasi-static conditions due to direct empirical fitting. The data confirm that a future adaptive scheme—switching algorithm based on detected concentration rate-of-change—could yield optimal performance across all regimes.

11.3. System Limitations

1. All validation is simulation-based; real sensor hardware deployment remains as future work.
2. The cross-sensitivity matrix $\mathbf{M}$ is fixed and does not self-calibrate with sensor ageing.
3. The $PM_{2.5}$ channel lacks aerosol density correction required in non-standard atmospheric conditions.

11.4. Future Enhancements

- **Hardware deployment:** PCB design and real Alphasense B4 sensor validation.
- **ML expansion:** LSTM networks for multi-step concentration forecasting.
- **Self-calibration:** Online recursive least-squares adaptation of $\mathbf{M}$.
- **Cloud integration:** MQTT streaming to a cloud AQI database with city-scale spatial interpolation.
- **Edge deployment:** Port to Raspberry Pi 4 or STM32H7 for battery-powered field units.

References

[1] World Health Organization, *WHO Global Air Quality Guidelines: Particulate Matter, Ozone, Nitrogen Dioxide, Sulfur Dioxide and Carbon Monoxide*, WHO, Geneva, 2021. [Online]. Available: https://www.who.int/publications/i/item/9789240034228

[2] A. C. Lewis *et al.*, "Evaluating the Performance of Low Cost Chemical Sensors for Air Pollution Research," *Faraday Discussions*, vol. 189, pp. 85–103, 2016. [Online]. Available: https://doi.org/10.1039/C5FD00201J

[3] Alphasense Ltd., *B4 Series Electrochemical Sensor Application Note AAN 803-04*, Alphasense, Great Notley, UK, 2019. [Online]. Available: http://www.alphasense.com/WEB1213/wp-content/uploads/2019/03/AAN803-04.pdf

[4] R. E. Kalman, "A New Approach to Linear Filtering and Prediction Problems," *Journal of Basic Engineering*, vol. 82, no. 1, pp. 35–45, Mar. 1960. [Online]. Available: https://doi.org/10.1115/1.3662552

[5] P. S. Maybeck, *Stochastic Models, Estimation, and Control*, vol. 1. Academic Press, New York, 1979. [Online]. Available: https://www.sciencedirect.com/book/9780124807013

[6] International Electrotechnical Commission, *IEC 60751: Industrial Platinum Resistance Thermometers and Platinum Temperature Sensors*, IEC, Geneva, 2008. [Online]. Available: https://webstore.iec.ch/publication/3311

[7] International Organization for Standardization, *ISO 7708: Air Quality — Particle Size Fraction Definitions for Health-Related Sampling*, ISO, Geneva, 1995. [Online]. Available: https://www.iso.org/standard/14534.html

[8] U.S. Environmental Protection Agency, *Technical Assistance Document for the Reporting of Daily Air Quality — the AQI*, EPA-454/B-12-001, Research Triangle Park, NC, May 2016. [Online]. Available: https://www.airnow.gov/sites/default/files/2020-05/aqi-technical-assistance-document-sept2018.pdf

[9] National Institute for Occupational Safety and Health, *NIOSH Pocket Guide to Chemical Hazards*, DHHS (NIOSH) Publication No. 2005-149, CDC, Cincinnati, OH, 2019. [Online]. Available: https://www.cdc.gov/niosh/npg/

[10] R. P. Sallen and E. L. Key, "A Practical Method of Designing RC Active Filters," *IRE Transactions on Circuit Theory*, vol. 2, no. 1, pp. 74–85, Mar. 1955. [Online]. Available: https://doi.org/10.1109/TCT.1955.6500146

[11] Recharts Contributors, *Recharts: A Redefined Chart Library Built with React and D3*, GitHub, 2023. [Online]. Available: https://github.com/recharts/recharts