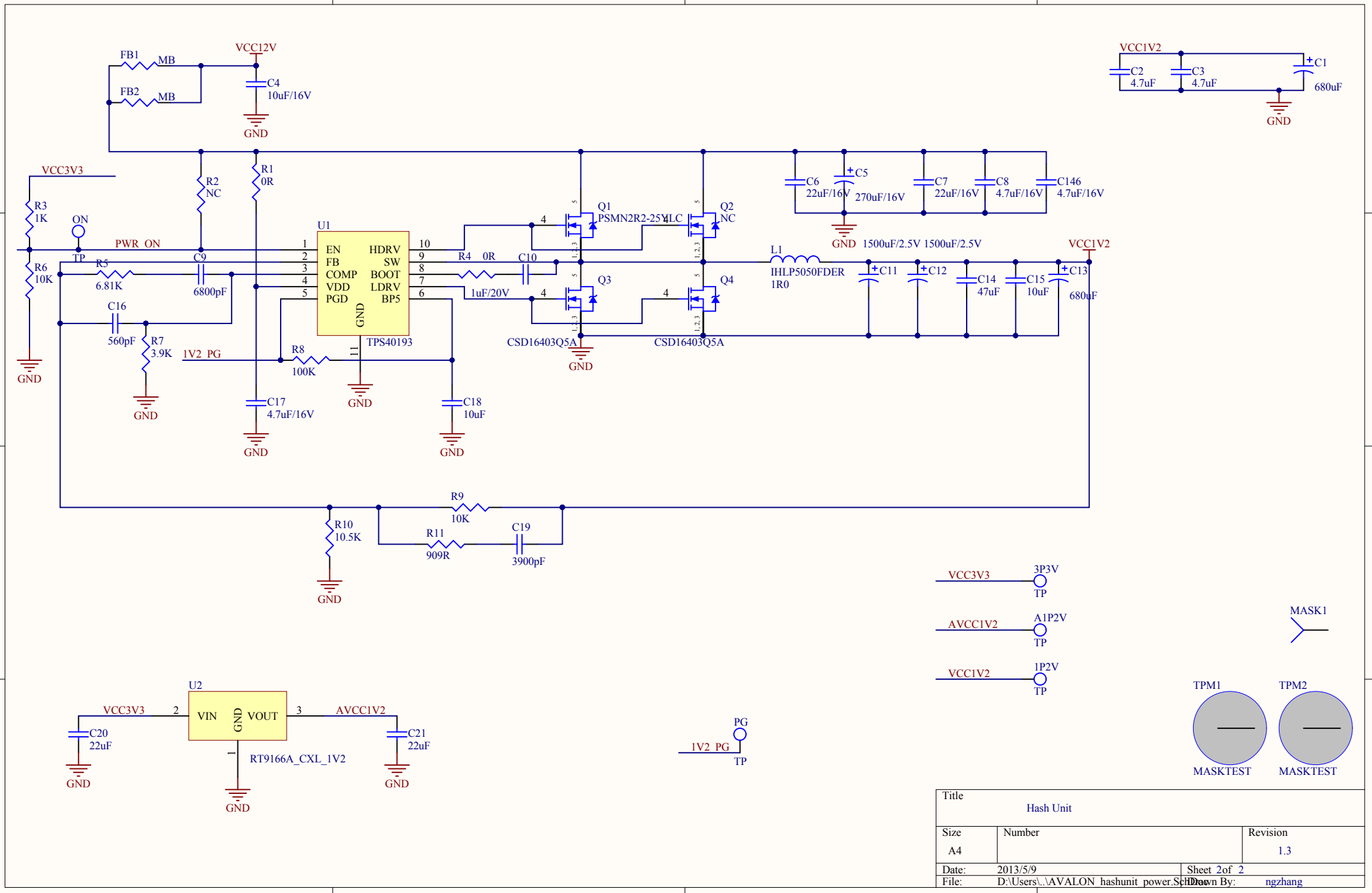

Title		
Hash Unit		
Size: A4	Number	Revision: 1.3
Date: 2013/5/9		Sheet 2of 2
File: D:\Users\..\AVALON_hashunit_power.SchDoc		Drawn By: ngzhang