Audio Lab Project

Schematic Document

2025-05-09

REV: 0.1

Sheet: /COVER/ File: cover.kicad_sch		
Title:		
Size: A4	Date:	**Rev:**
KiCad E.D.A. 9.0.2		Id: 1/7

Revision History

DATE	REV	
25/05/09	0.1	The first edition of Project

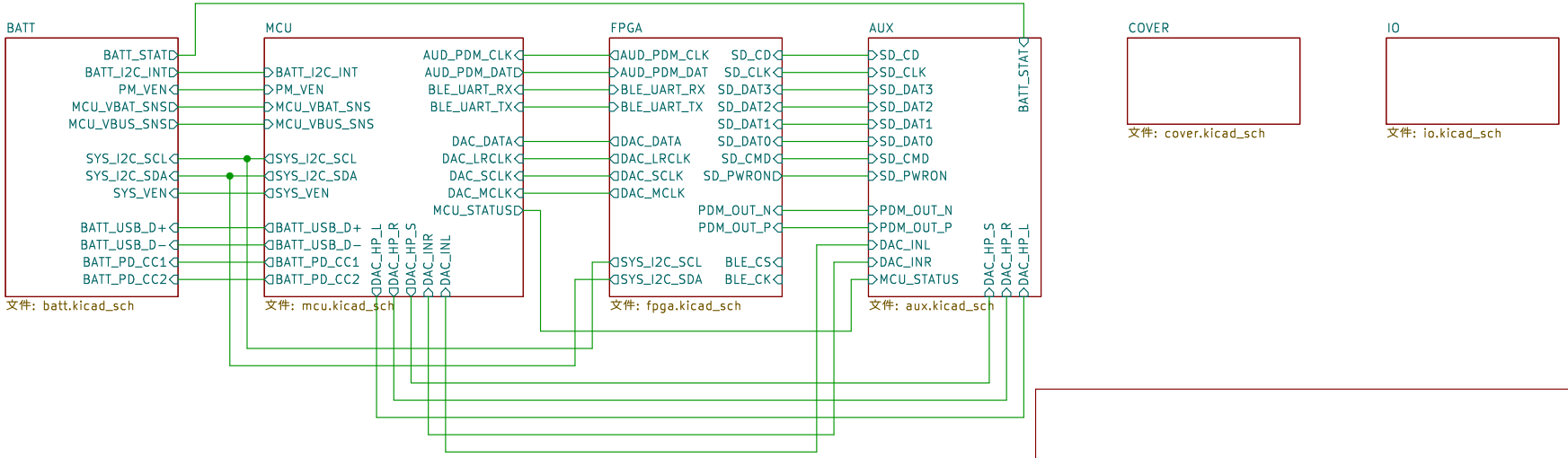

Sheet: /
File: audio_lab.kicad_sch

Title:

Size: A4	Date:	Rev:
KiCad E.D.A. 9.0.2		Id: 2/7

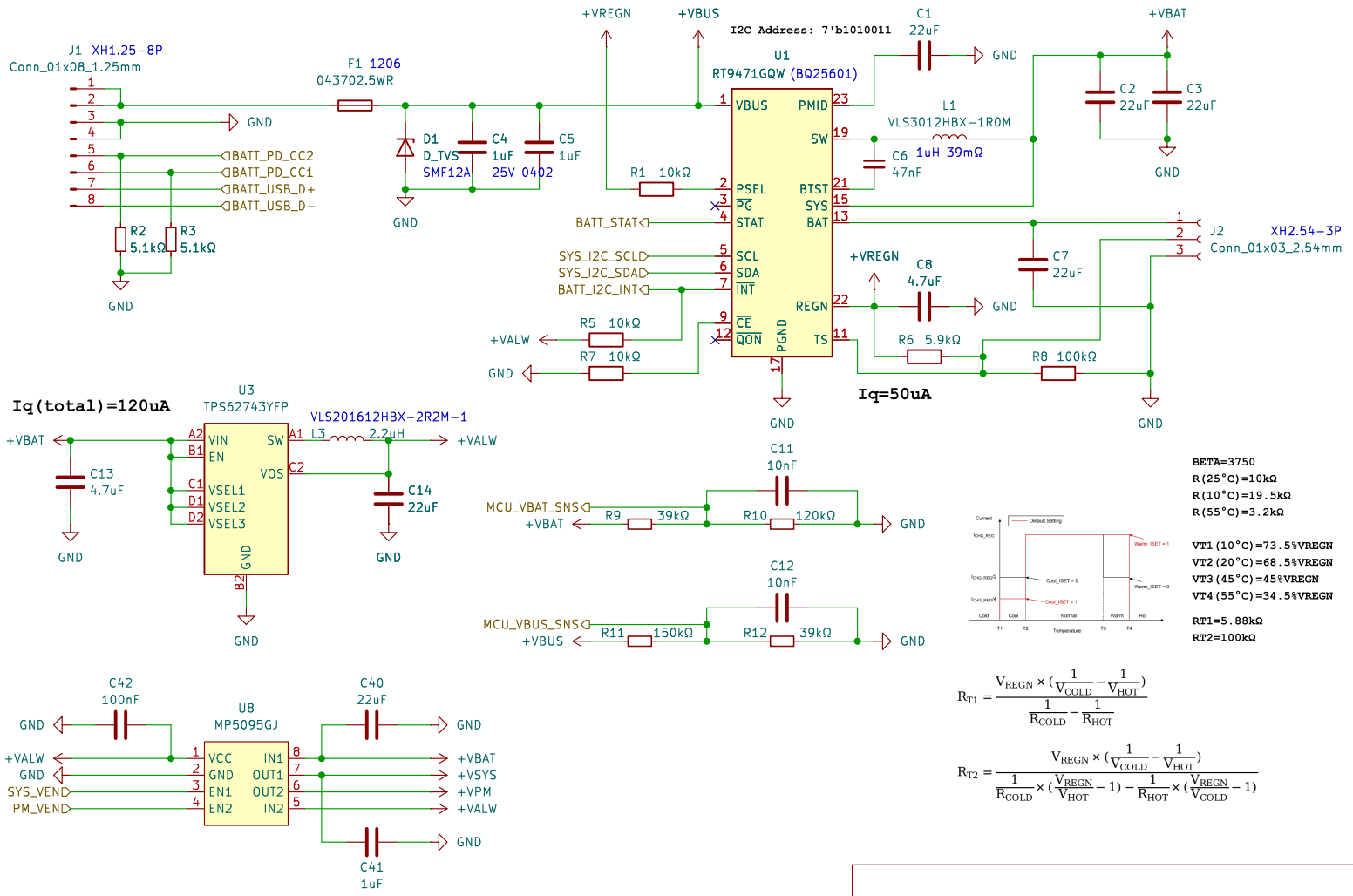

$$R_{T1} = \frac{V_{REGN} \times \left(\frac{1}{V_{COLD}} - \frac{1}{V_{HOT}}\right)}{\frac{1}{R_{COLD}} - \frac{1}{R_{HOT}}}$$

$$R_{T2} = \frac{V_{REGN} \times \left(\frac{1}{V_{COLD}} - \frac{1}{V_{HOT}}\right)}{\frac{1}{R_{COLD}} \times \left(\frac{V_{REGN}}{V_{HOT}} - 1\right) - \frac{1}{R_{HOT}} \times \left(\frac{V_{REGN}}{V_{COLD}} - 1\right)}$$

Sheet: /BATT/
File: batt.kicad_sch

Title:

Size: A4	Date:	Rev:
KiCad E.D.A. 9.0.2		Id: 4/7

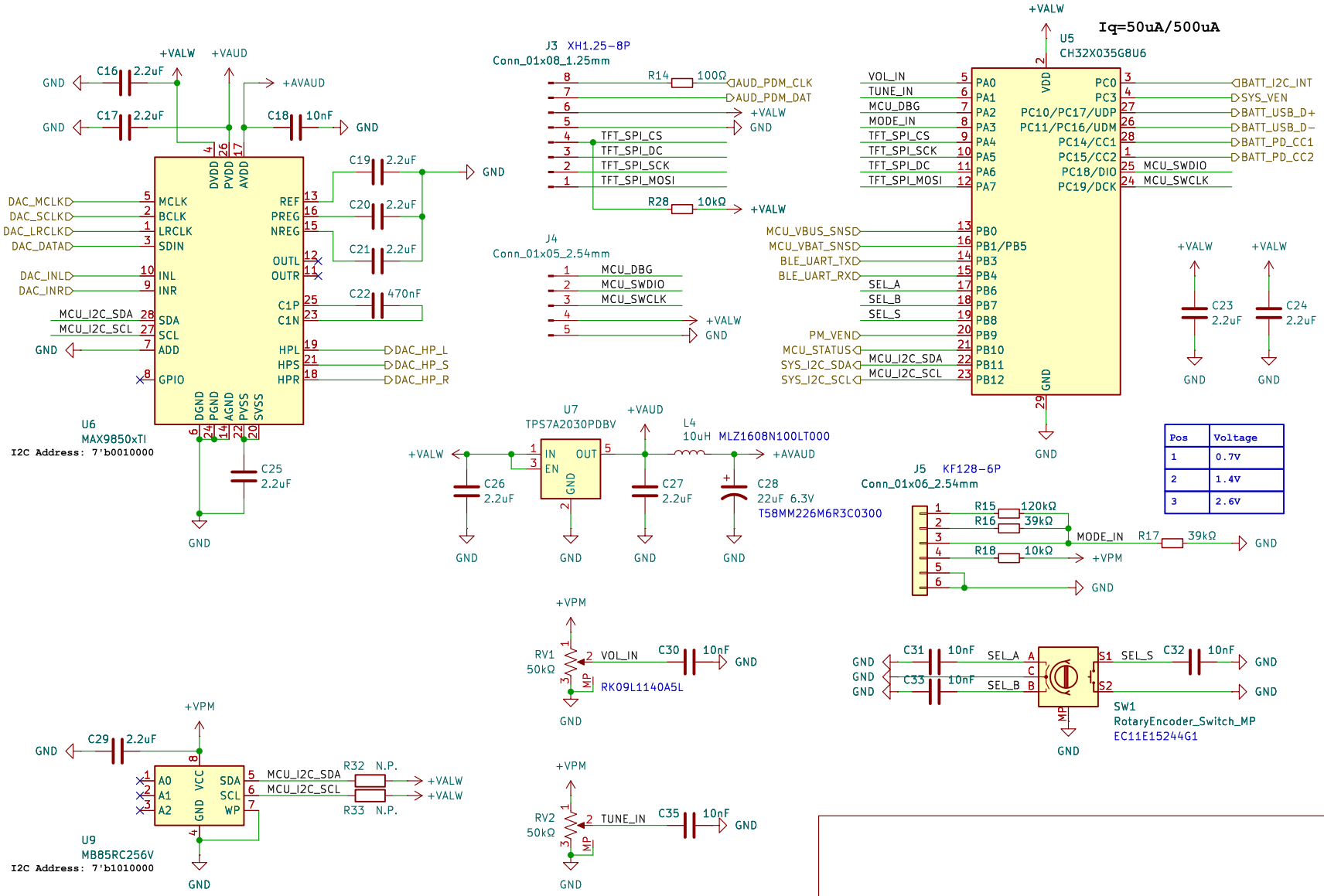
Iq=50uA/500uA
U5
CH32X035G8U6
U6
MAX9850xTI
I2C Address: 7'b0010000
U7
TPS7A2030PDBV
L4
10uH MLZ1608N100LT000
C28
22uF 6.3V
T58MM226M6R3C0300
J3 XH1.25-8P
Conn_01x08_1.25mm
J4
Conn_01x05_2.54mm
J5 KF128-6P
Conn_01x06_2.54mm
RV1
50kΩ
RK09L1140A5L
RV2
50kΩ
SW1
RotaryEncoder_Switch_MP
EC11E15244G1
U9
MB85RC256V
I2C Address: 7'b1010000
Pos | Voltage
1 | 0.7V
2 | 1.4V
3 | 2.6V
Sheet: /MCU/
File: mcu.kicad_sch
Title:
Size: A4
Date:
Rev:
KiCad E.D.A. 9.0.2
Id: 5/7

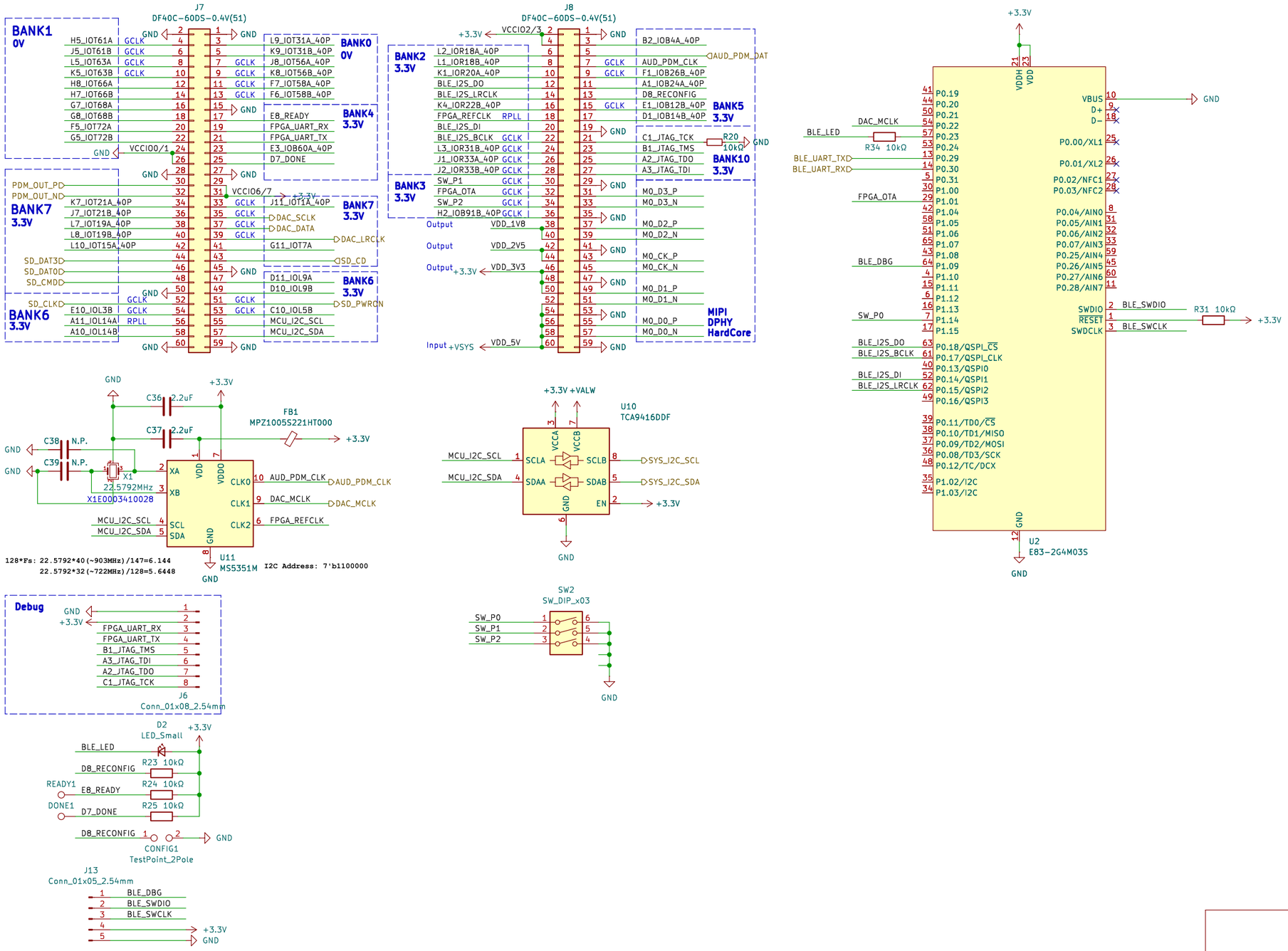

Sheet: /FPGA/
File: fpga.kicad_sch

Title:

Size: B	Date:	Rev:
KiCad E.D.A. 9.0.2		Id: 6/7

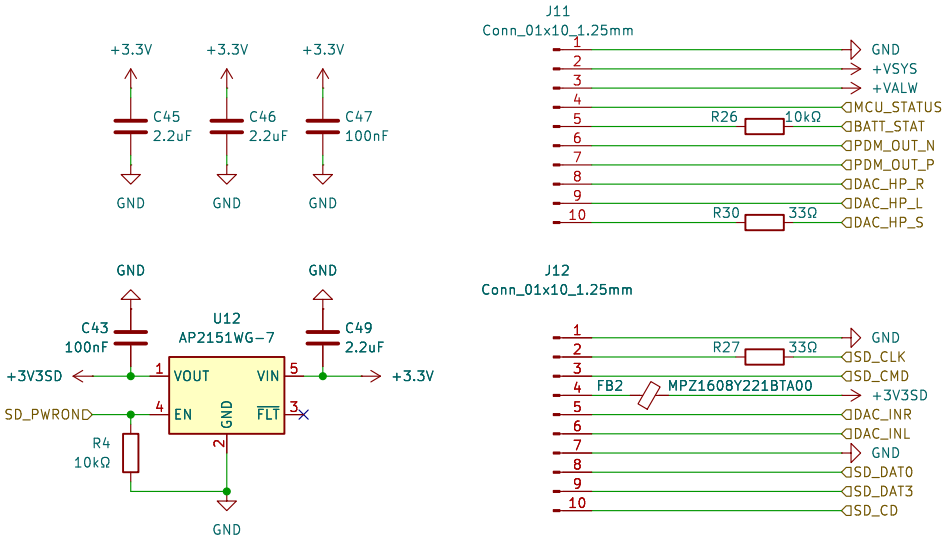

Sheet: /AUX/
File: aux.kicad_sch

Title:

Size: A4	Date:	Rev:
KiCad E.D.A. 9.0.2		Id: 7/7

IO	PIN
SYS_I2C_SCL	B11_IOL12A
SYS_I2C_SDA	B10_IOL12B
SD_DAT3	K10_IOT15B
SD_CMD	L11_IOT11B
SD_CLK	E11_IOL3A
SD_DAT0	K11_IOT11A
AUD_PDM_DAT	E11_IOL3A
AUD_PDM_CLK	E10_IOL3B
FPGA_REFCLK	G2_IOR24A
UART_RX	B3_IOB56A
UART_TX	C3_IOB56B
PDM_OUT_N	K6_IOT23B
PDM_OUT_P	L6_IOT23A
SD_CD	G10_IOT7B
SD_PWRON	C11_IOL5A

IO	PIN
DAC_LRCLK	H10_IOT3B
DAC_DATA	H11_IOT3A
DAC_SCLK	J10_IOT1B
SW_P1	G4_IOB89A
SW_P2	H1_IOB91A
FPGA_OTA	H4_IOB89B
BLE_I2S_DO	K2_IOR20B
BLE_I2S_DI	G1_IOR24B
BLE_I2S_LRCLK	J4_IOR22A
BLE_I2S_BCLK	L4_IOR31A
AUD_PDM_DAT	C2_IOB4B
AUD_PDM_CLK	F2_IOB26A

IO	PIN

Sheet: /IO/
File: io.kicad_sch

Title:

Size: A4 | Date: | **Rev:**
KiCad E.D.A. 9.0.2 | Id: 8/7