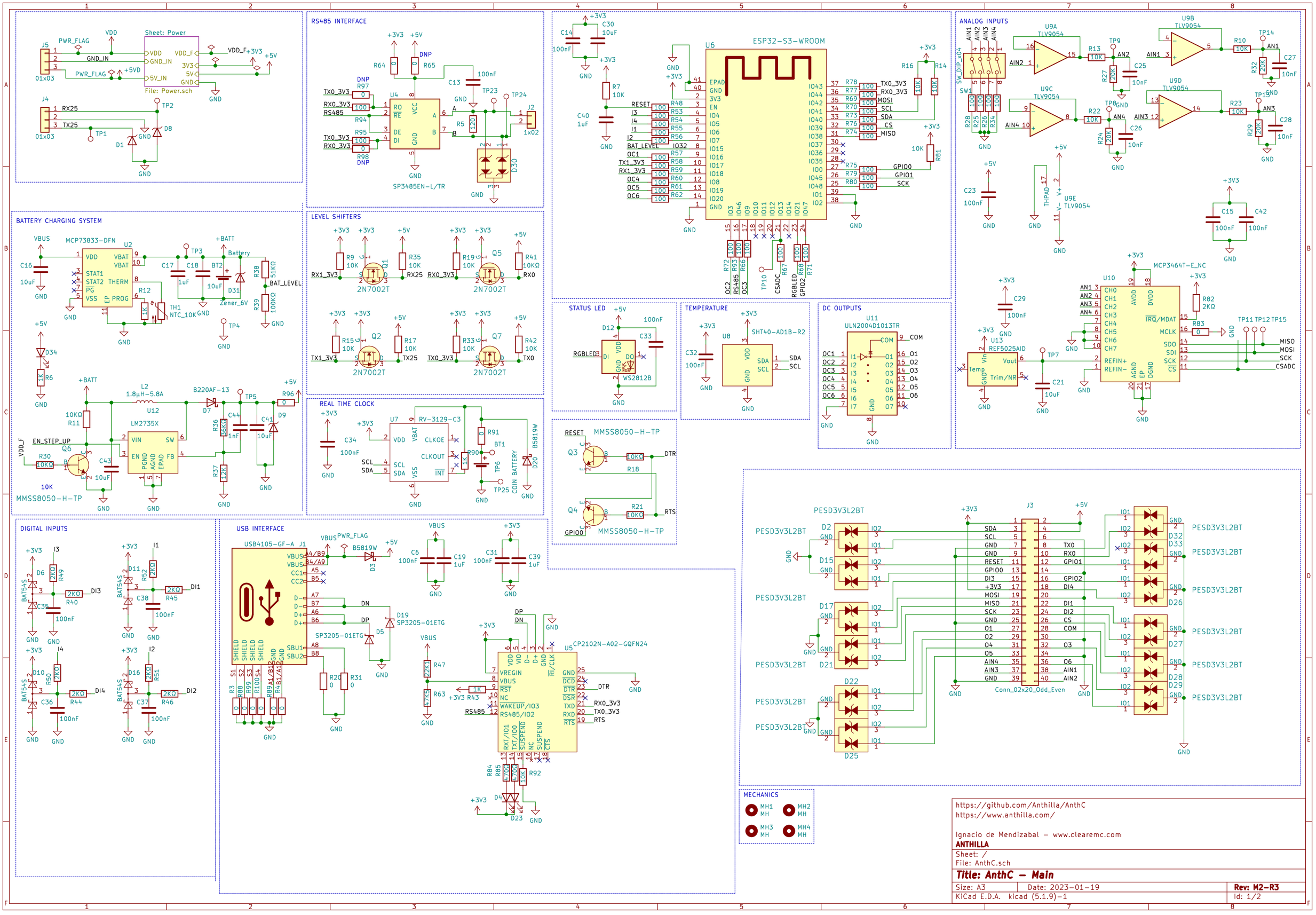
Sheet: Power
File: Power.sch
RS485 INTERFACE
SP3485EN-L/TR
ESP32-S3-WROOM
ANALOG INPUTS
BATTERY CHARGING SYSTEM
MCP73833-DFN
LEVEL SHIFTERS
2N7002T
STATUS LED
WS2812B
TEMPERATURE
SHT40-AD1B-R2
DC OUTPUTS
ULN2004D1013TR
REAL TIME CLOCK
RV-3129-C3
MCP3464T-E_NC
REF5025AID
LM2735X
MMSS8050-H-TP
DIGITAL INPUTS
USB INTERFACE
USB4105-GF-A
CP2102N-A02-GQFN24
Conn_02x20_Odd_Even
MECHANICS
https://github.com/Anthilla/AnthC
https://www.anthilla.com/
Ignacio de Mendizabal – www.clearemc.com
ANTHILLA
Sheet: /
File: AnthC.sch
Title: AnthC – Main
Size: A3
Date: 2023-01-19
Rev: M2-R3
KiCad E.D.A. kicad (5.1.9)-1
Id: 1/2

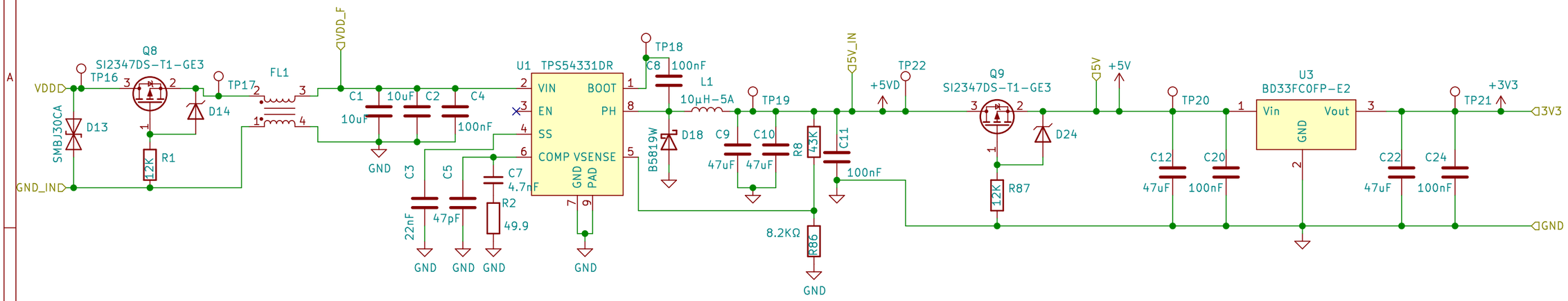

https://github.com/Anthilla/AnthC
https://www.anthilla.com/

Ignacio de Mendizabal – www.clearemc.com
ANTHILLA

Sheet: /Power/
File: Power.sch

Title: AnthC – Main

Size: A4	Date: 2023-01-19	**Rev: M2-R2**
KiCad E.D.A. kicad (5.1.9)-1		Id: 2/2