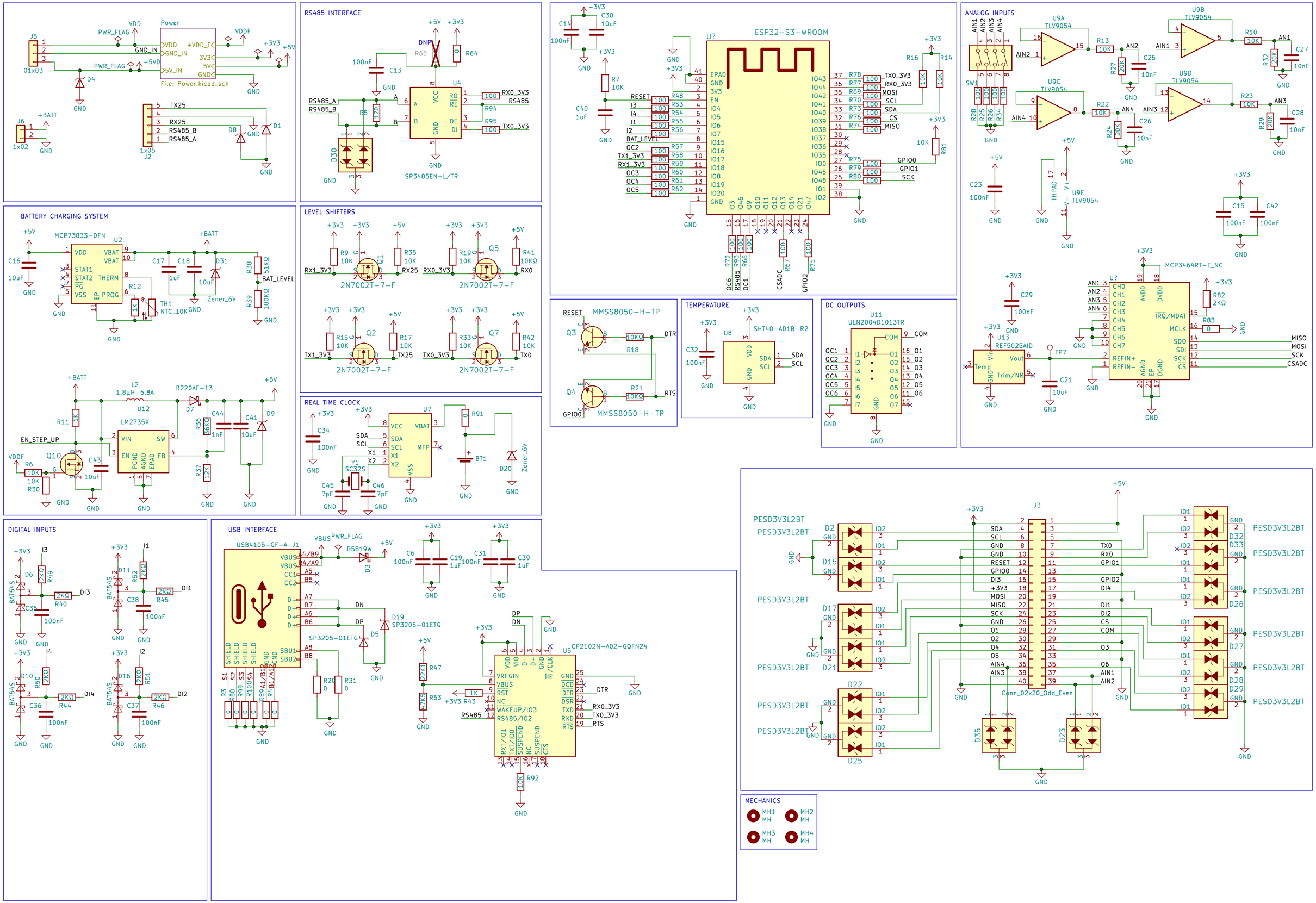
Power
File: Power.kicad_sch
RS485 INTERFACE
SP3485EN-L/TR
BATTERY CHARGING SYSTEM
MCP73833-DFN
LEVEL SHIFTERS
2N7002T-7-F
REAL TIME CLOCK
SC32S
DIGITAL INPUTS
USB INTERFACE
USB4105-GF-A
CP2102N-A02-QGFN24
ESP32-S3-WROOM
ANALOG INPUTS
TLV9054
MCP3464RT-E_NC
REF5025AID
TEMPERATURE
SHT40-AD1B-R2
DC OUTPUTS
ULN2004D1013TR
MMSS8050-H-TP
Conn_02x20_Odd_Even
MECHANICS

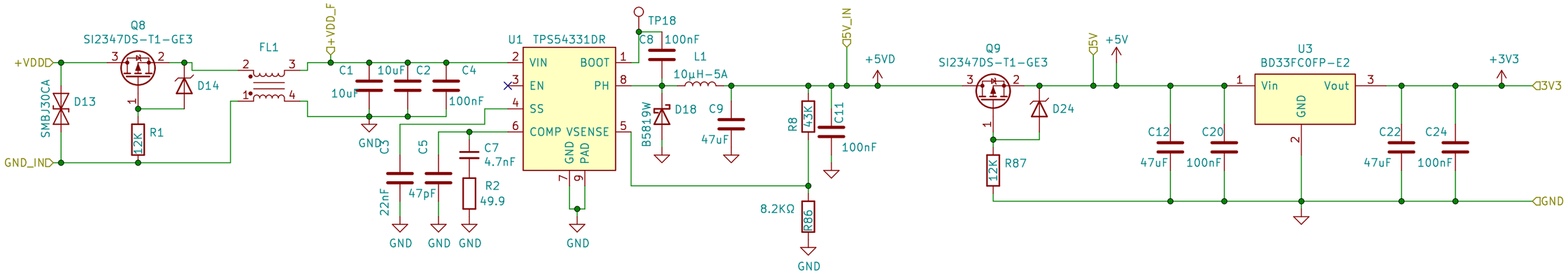
Q8
SI2347DS-T1-GE3
+VDD
GND_IN
SMBJ30CA
D13
D14
R1
12K
FL1
+VDD_F
C1
10uF
C2
10uF
C4
100nF
GND
U1 TPS54331DR
VIN
EN
SS
COMP
VSENSE
BOOT
PH
GND
PAD
C3
22nF
C5
47pF
C7
4.7nF
R2
49.9
TP18
C8
100nF
L1
10µH-5A
B5819W
D18
C9
47uF
R8
43K
8.2KΩ
R86
C11
100nF
5V_IN
+5VD
Q9
SI2347DS-T1-GE3
D24
R87
12K
5V
+5V
U3
BD33FC0FP-E2
Vin
Vout
GND
C12
47uF
C20
100nF
C22
47uF
C24
100nF
+3V3
3V3