nRF52840 BLE

Do not use I2C pull-up
(NRF has internal pull-up)

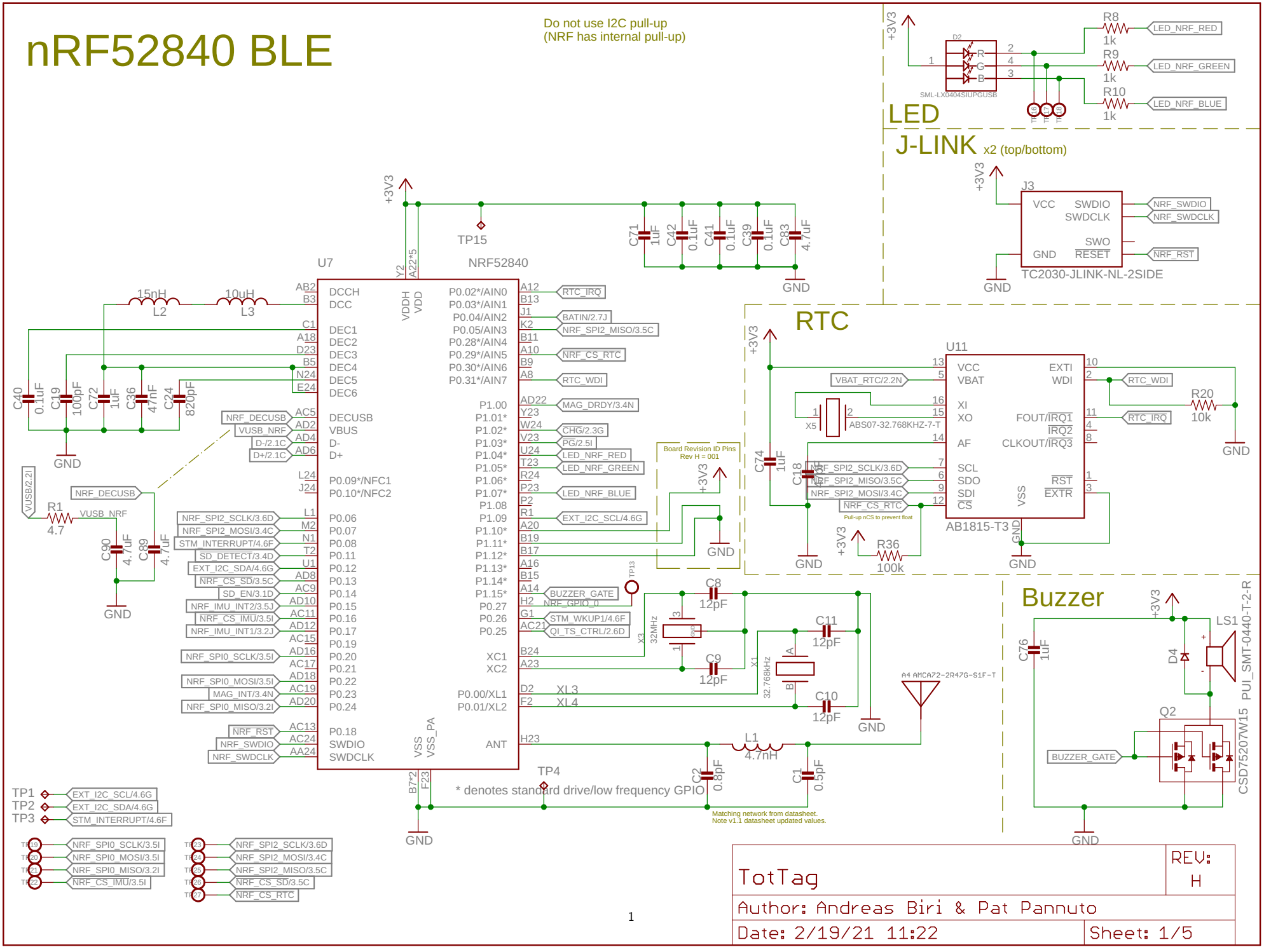

BATTERY

HCP643450NZC, 3.7V, 1200mah
Bare raw cell: 6.4*34.5*50.5mm max. in T*W*L
Assemble size: 6.4*34.5*52 mm max. in T*W*L
Over-charge voltage: 4.28V
Over- discharge voltage: 3.0V
Continuous charge rate: 0.2C
Peak charge rate:1C
Continuous discharge rate: 0.2C
Peak discharge rate:1C, for 2-3ms
NTC, 10K B=3435
Wire: UL1571-28AWG#, 100mm, from left
Connector: MOLEX87439-3P, positive
PCM added

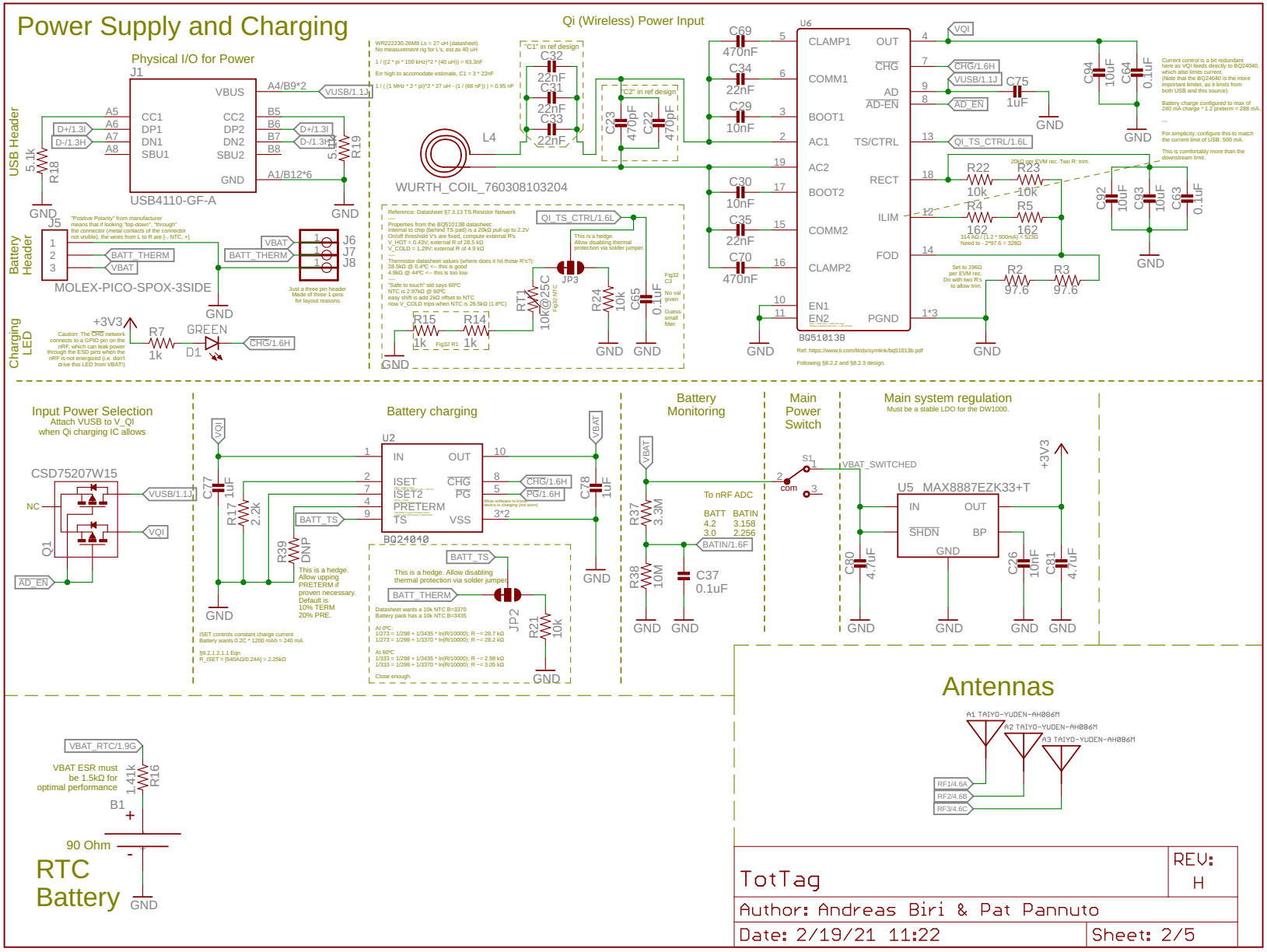

SD Card Adapter

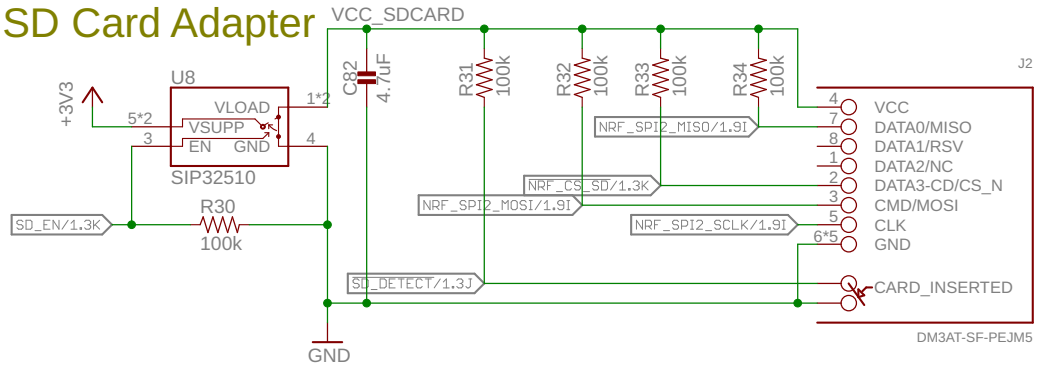

Accelerometer + Gyro

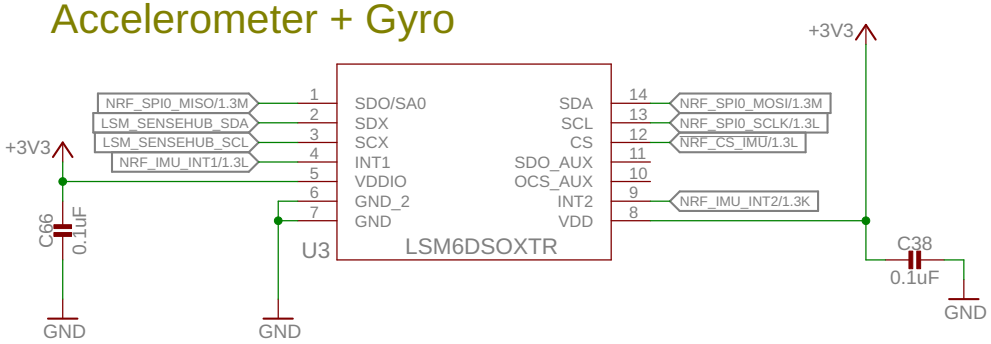

Magnetometer

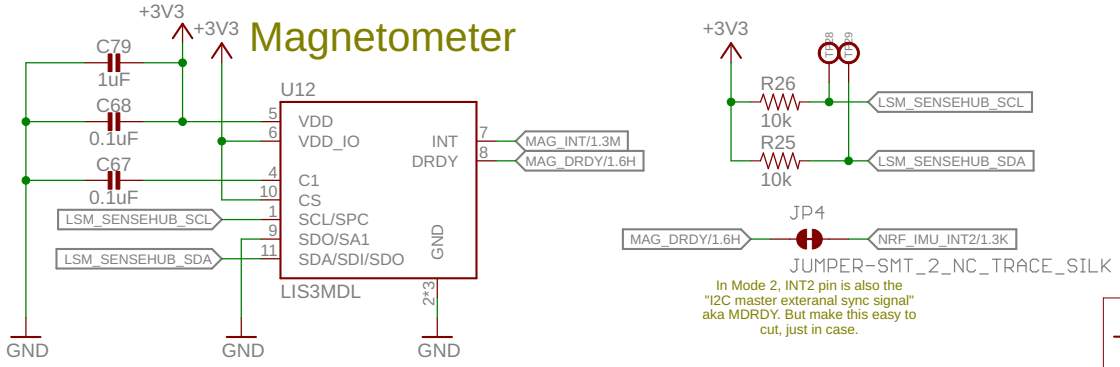

In Mode 2, INT2 pin is also the "I2C master exteranal sync signal" aka MDRDY. But make this easy to cut, just in case.

TotTag	REV: H
Author: Andreas Biri & Pat Pannuto	
Date: 2/19/21 11:22	Sheet: 3/5

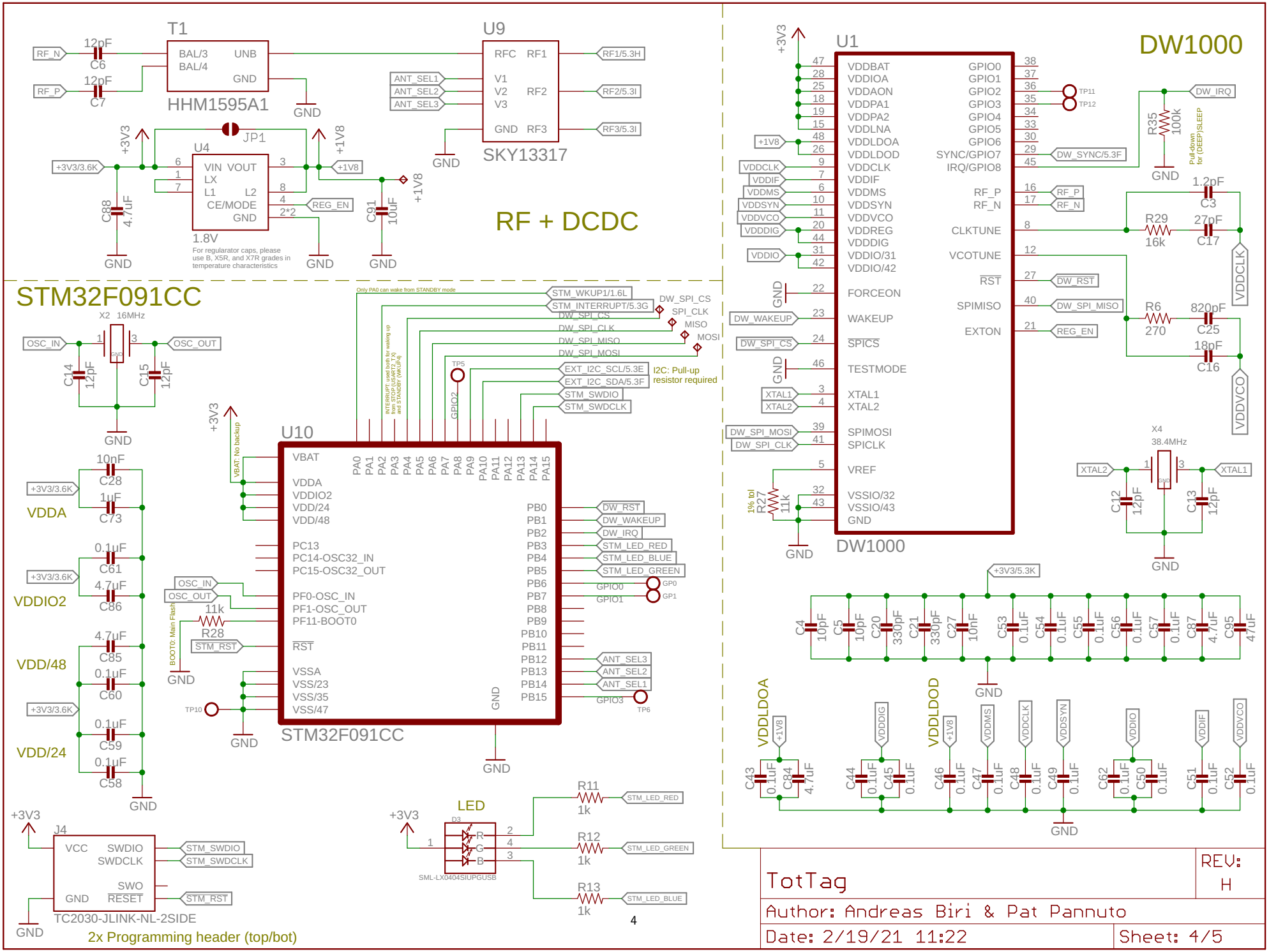
T1
HHM1595A1
U9
SKY13317
RF + DCDC
U4
1.8V
JP1
STM32F091CC
U10
STM32F091CC
U1
DW1000
DW1000
X2 16MHz
X4 38.4MHz
VDDA
VDDIO2
VDD/48
VDD/24
LED
J4
TC2030-JLINK-NL-2SIDE
2x Programming header (top/bot)
I2C: Pull-up resistor required
TotTag
REV: H
Author: Andreas Biri & Pat Pannuto
Date: 2/19/21 11:22
Sheet: 4/5
4

EXTERNAL SIGNALS

The following signals must be integrated into all designs using the design block:

Signals

EXT_I2C_SCL/4.6G

EXT_I2C_SDA/4.6G

Note: Additional I2C pull-up resistors required to +3V3

DW_SYNC/4.10C

STM_INTERRUPT/4.6F

Antennas

RF1/4.6A

RF2/4.6B

RF3/4.6C

Guarantee 120° offset in-between antennas to maximize polarization difference and antenna diversity

RF traces should respect the keepout zones and be surrounded by a via shield.
Furthermore, try to keep them as short and straight as possible

Power Supply

+3V3/4.10K

Be aware that the DecaWave is very sensitive regarding its power supply.

We suggest using the "MAX8887EZK33+T" from Maxim Integrated.
You can find a reference layout at github.com/lab11/totternary/hardware/tottag.

TotTag	REV: H
Author: Andreas Biri & Pat Pannuto	
Date: 2/19/21 11:22	Sheet: 5/5

Top and Bottom Layers

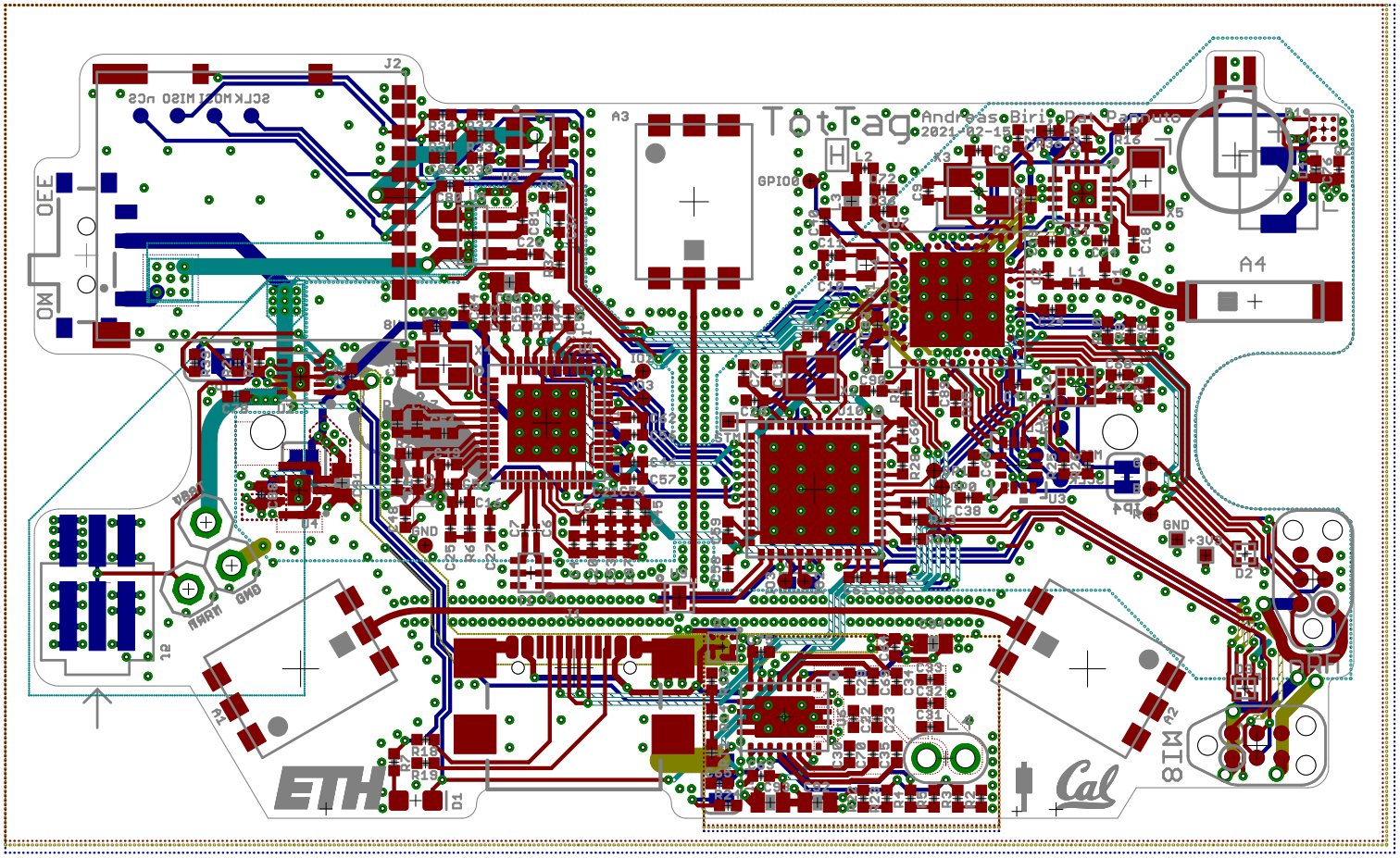

Top Layer

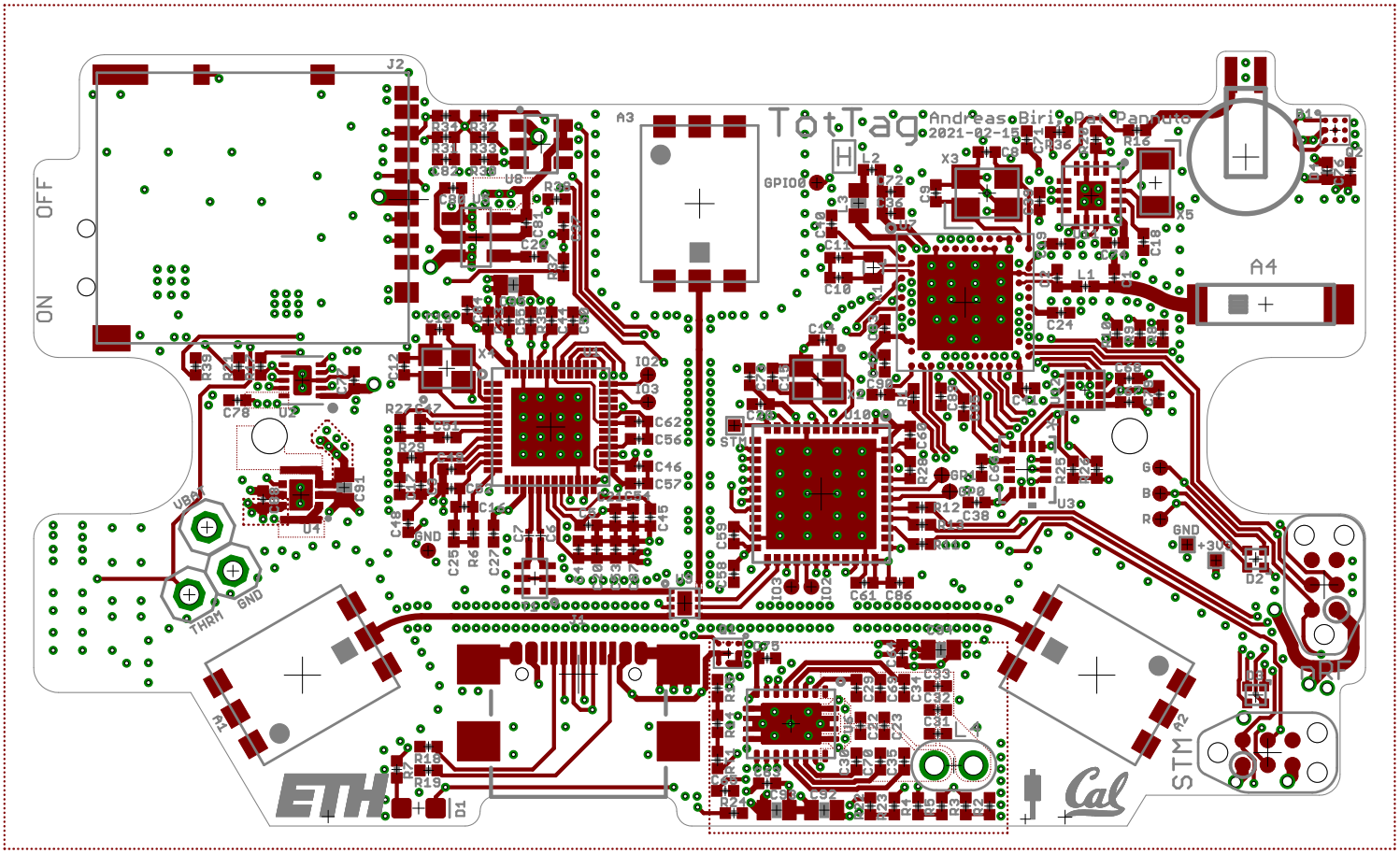
TotTag
Andreas Biri, Pat Pannuto
2021-02-15
OFF
ON
A3
A4
A1
A2
J2
GPIO0
STM
THRM
GND
ETH
Cal

Bottom Layer

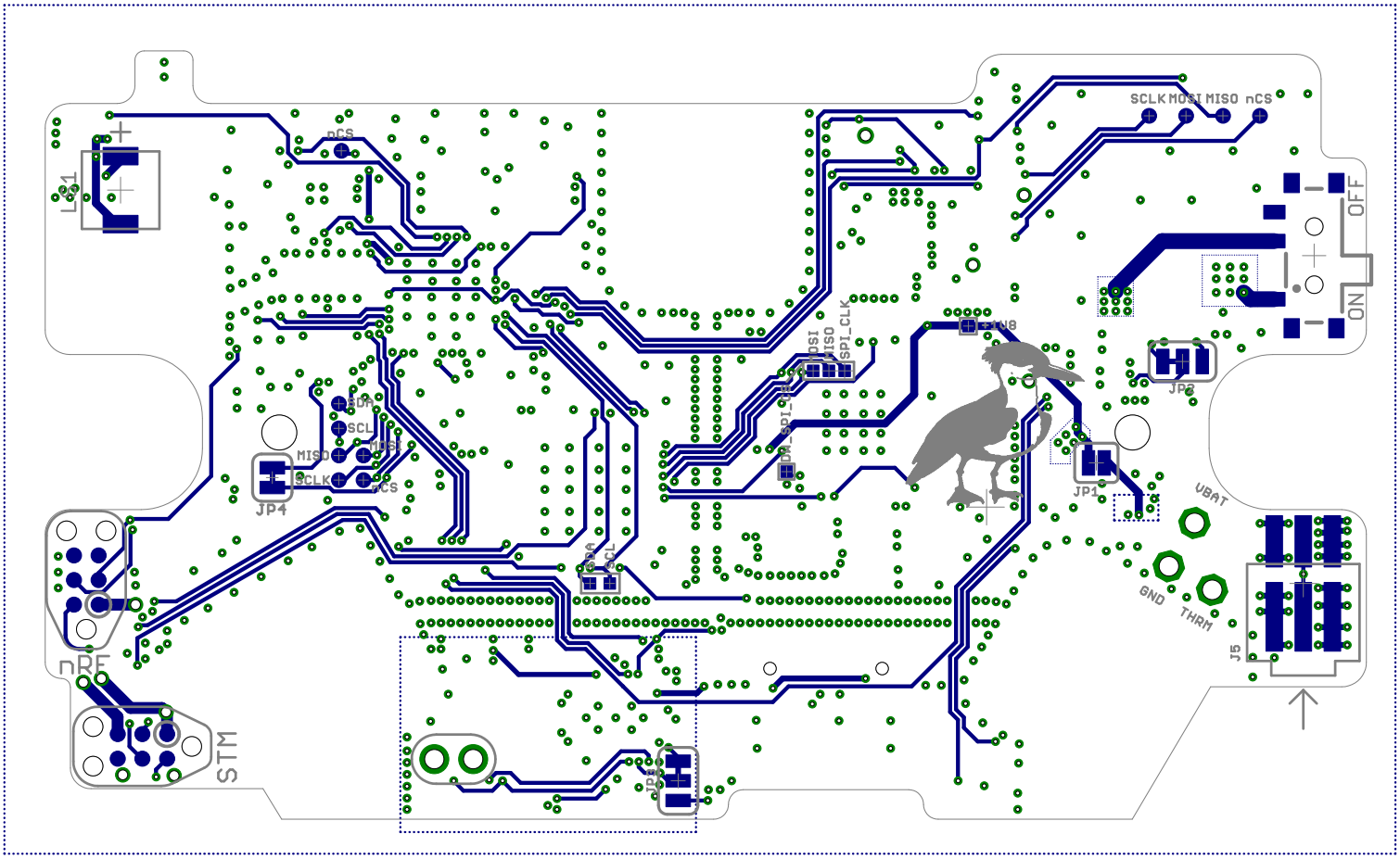

Top Copper Layer

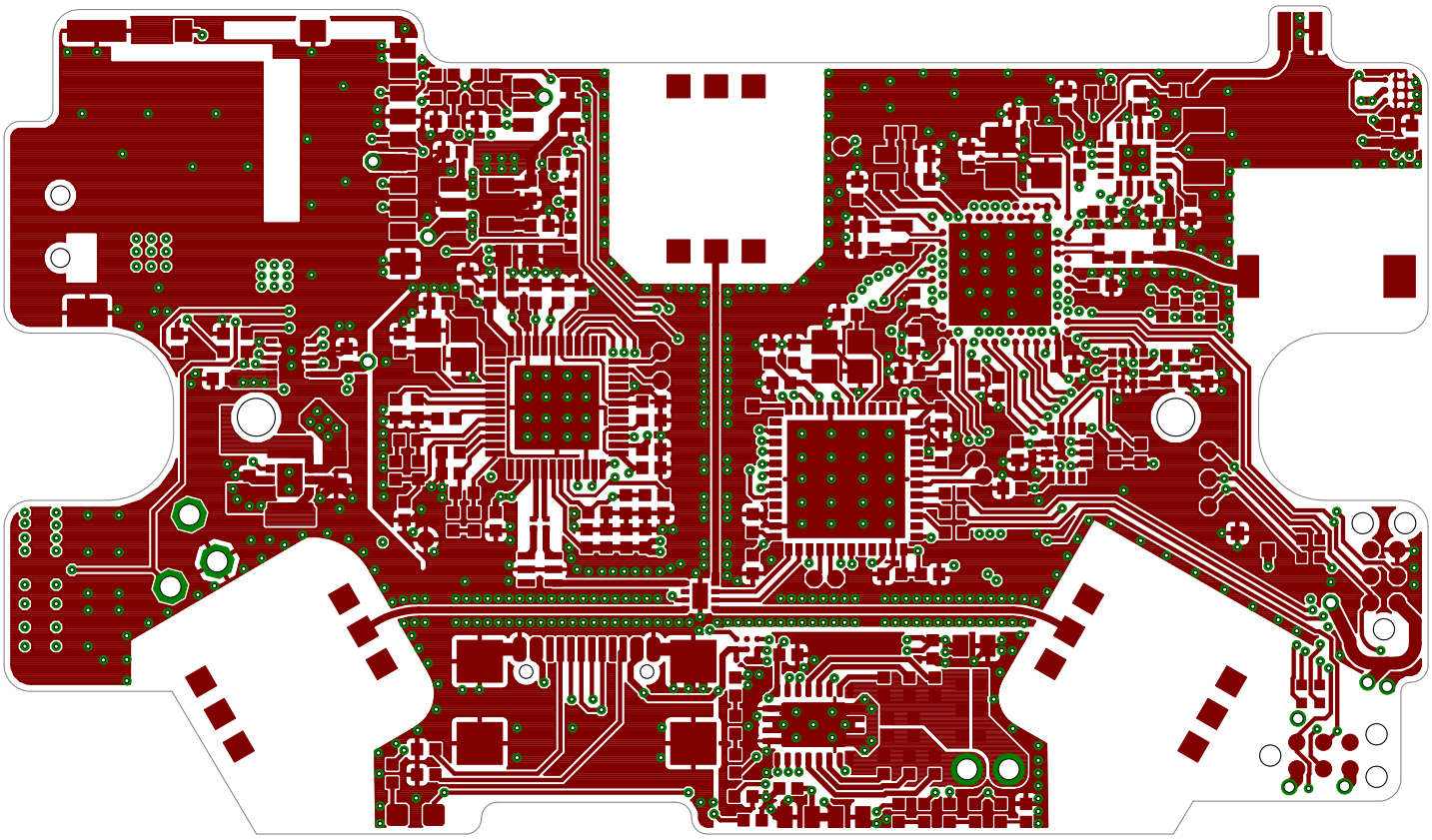

Layer 2 Copper

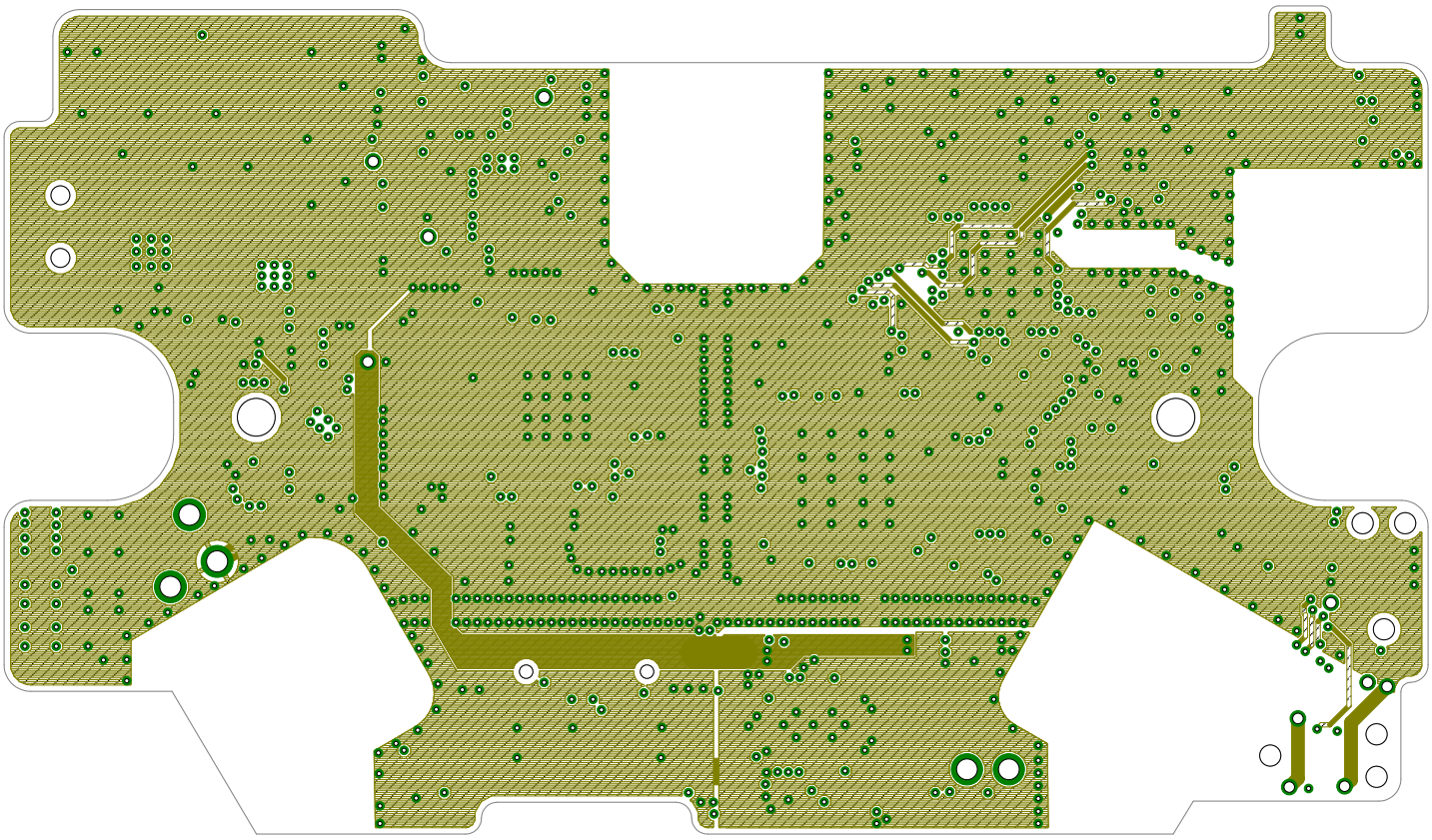

Layer 3 Copper

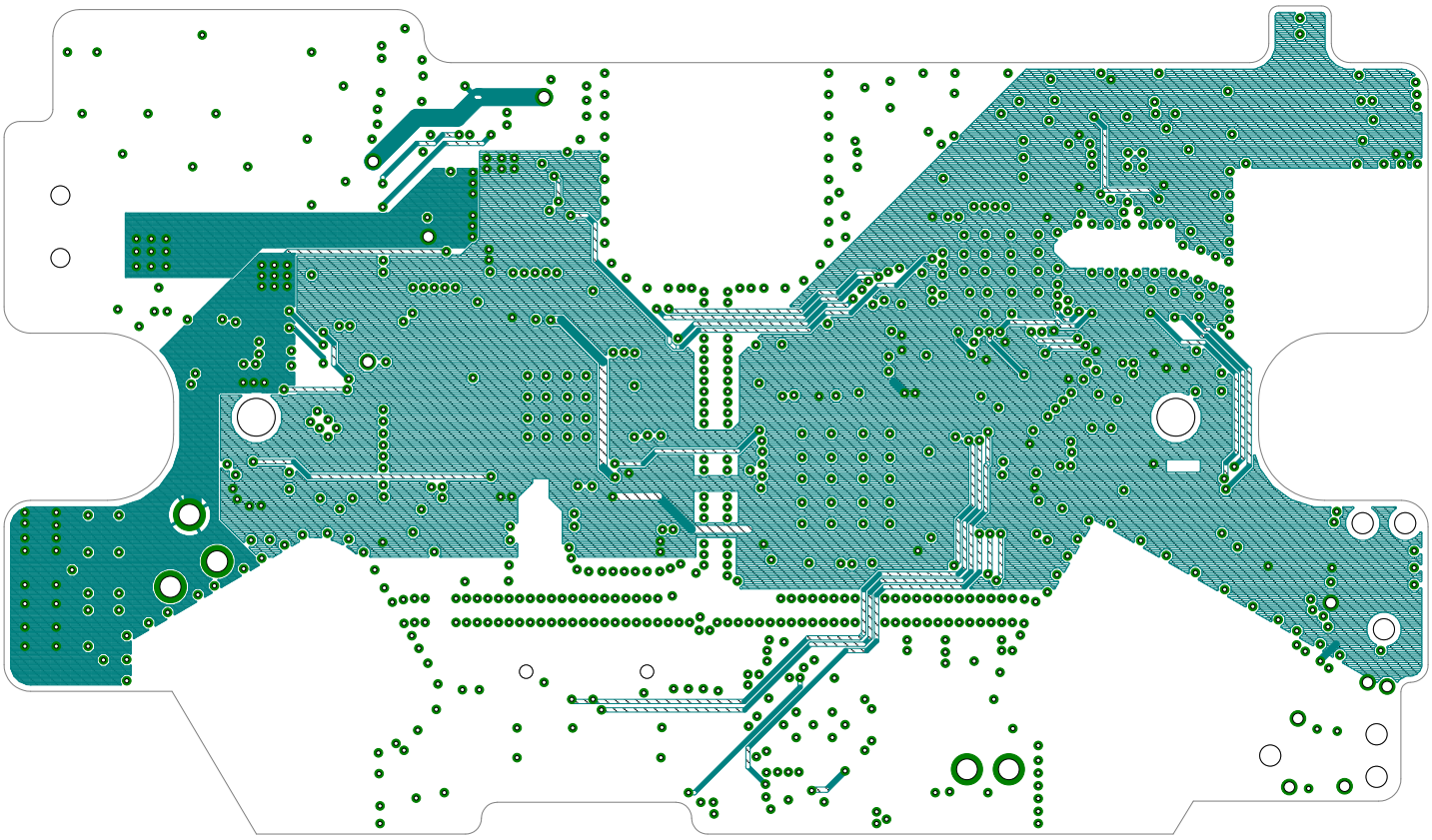

Bottom Copper Layer

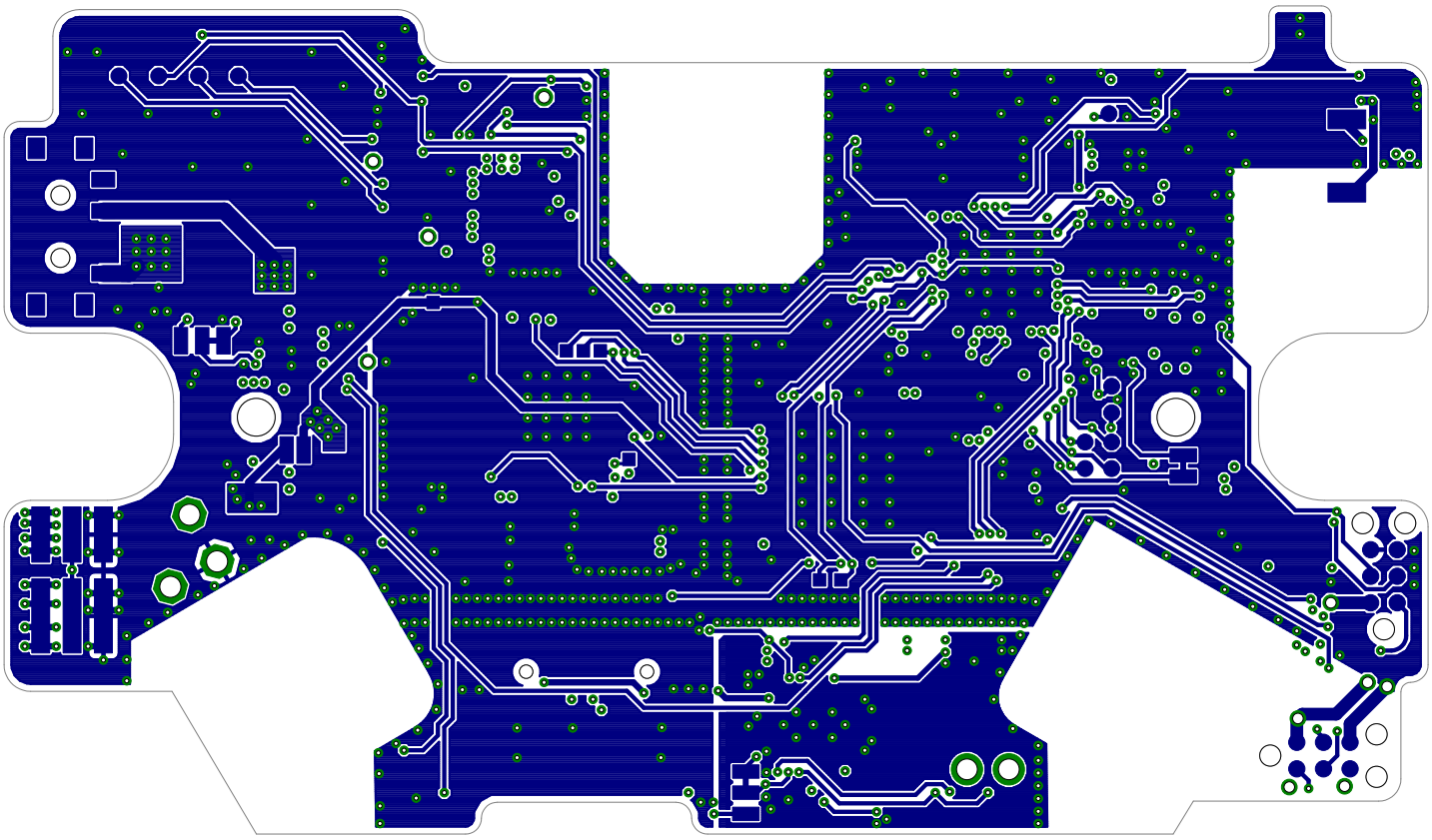

Top Paste Layer with Silkscreen

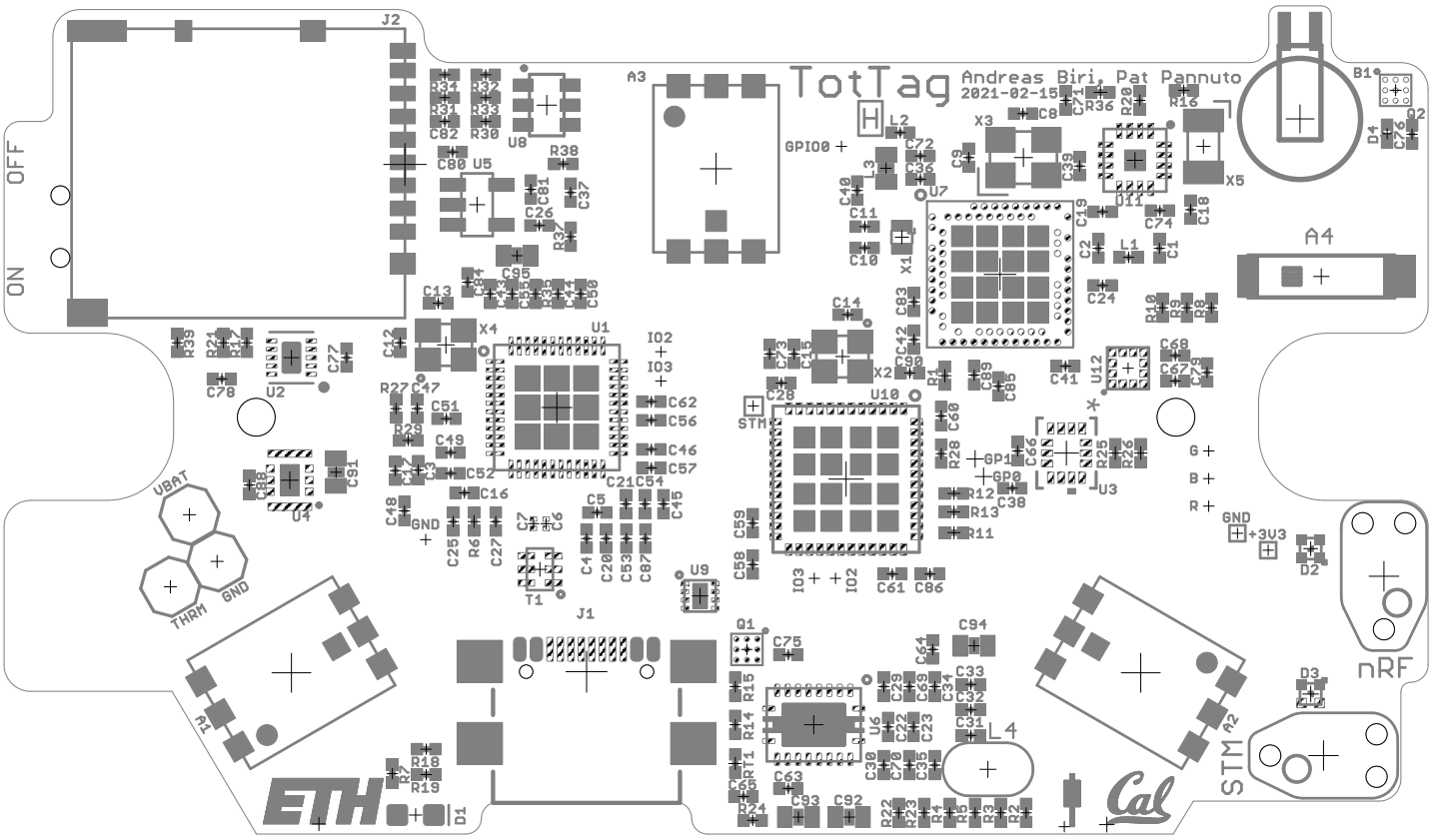

Bottom Paste Layer with Silkscreen

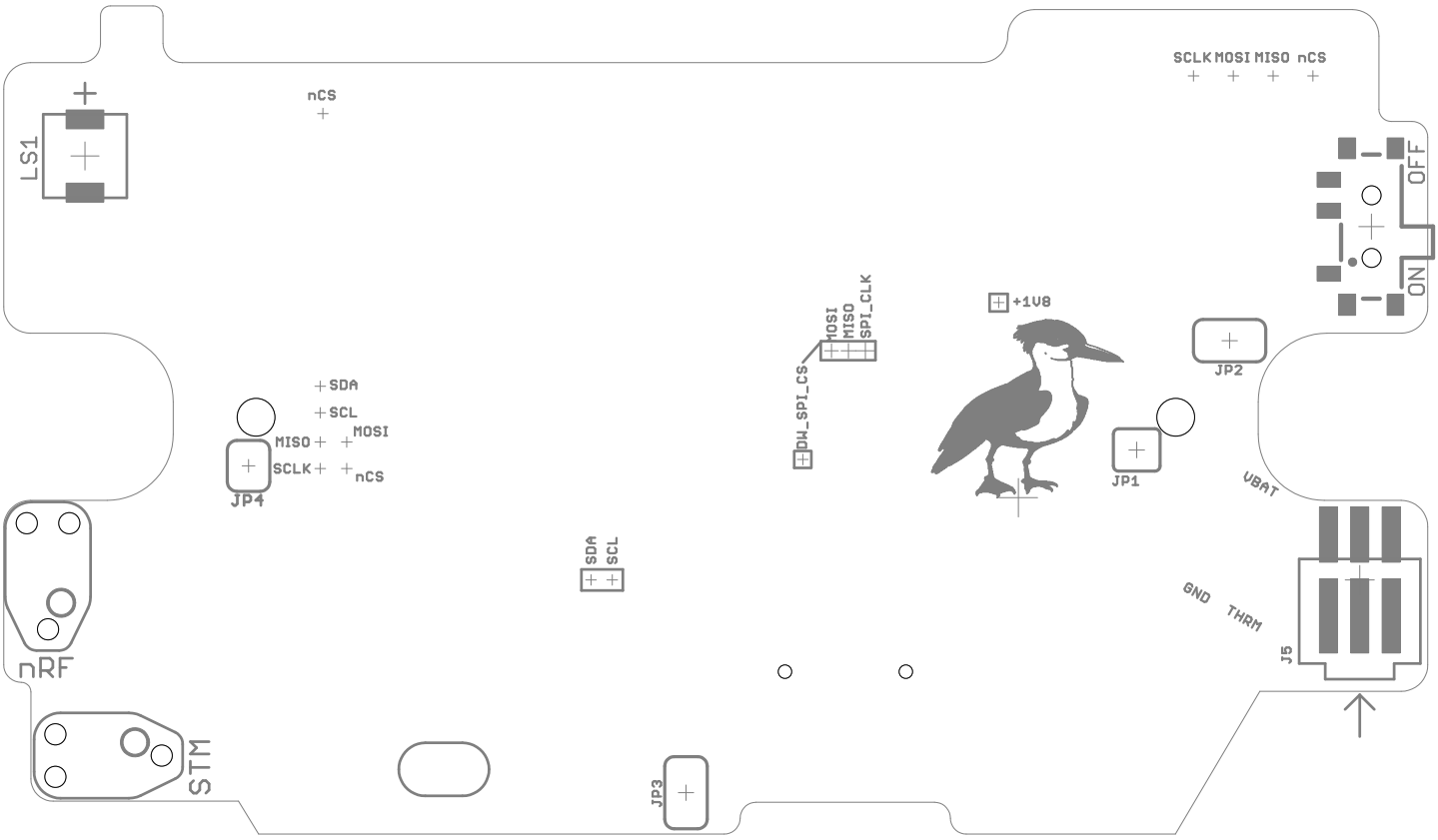

Top and Bottom Layers 1:1 Scale

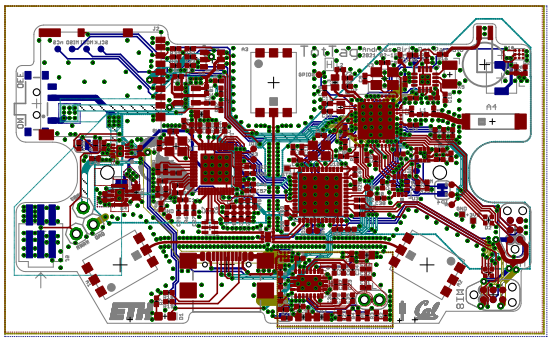

Top Layer 1:1 Scale

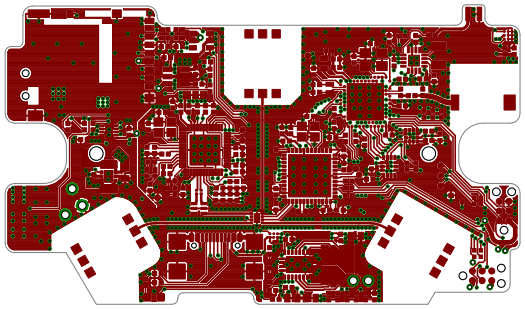

Layer 2 Copper 1:1 Scale

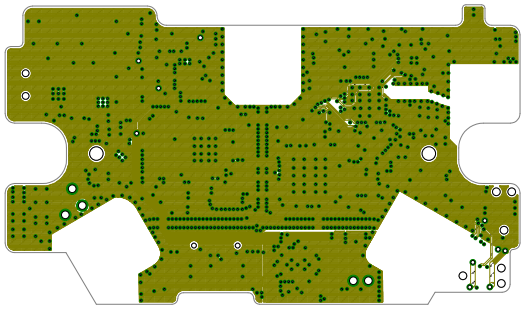

Layer 3 Copper 1:1 Scale

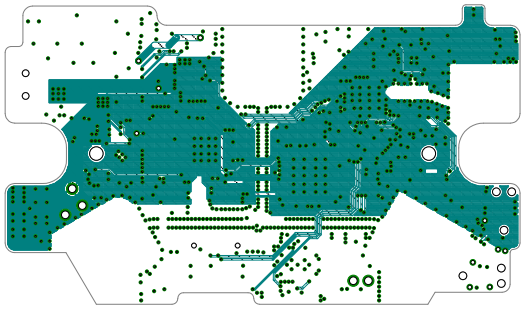
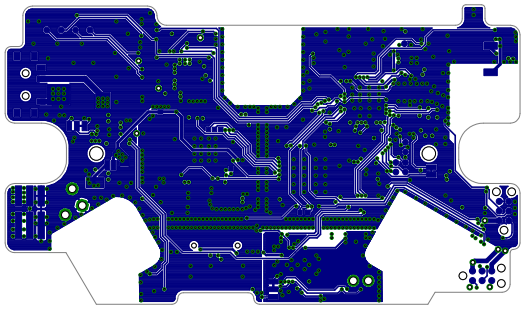
Bottom Copper Layer 1:1 Scale