Self-Study Summary Collection

Volume 1

Electronics

Anton Augustsson

April 18, 2026

Contents

1 Digital Technology and Electronics **5**
1.1 Circuit Theory . . . 6
1.1.1 Basic electical quantities . . . 6
1.1.2 Prefixes . . . 7
1.1.3 Unit grammar . . . 7
1.1.4 Ohm's law . . . 7
1.1.5 Circuit elements . . . 7
1.1.6 Circut termenology . . . 7
1.1.7 Series Resistor . . . 8
1.1.8 Parralel resistor . . . 9
1.1.9 Simplify resistor network . . . 10
1.1.10 Voltage divider . . . 11
1.1.11 Kirchhoff's laws . . . 11
1.1.12 Node voltage method . . . 12
1.1.13 Mesh current method . . . 14
1.1.14 Capacitor i-v equation . . . 14
1.1.15 inductor i-v equation . . . 14
1.1.16 RC circuit . . . 16
1.2 Semiconductors . . . 19
1.2.1 Diodes . . . 19
1.2.2 Transistors . . . 24
1.3 AC Circuit Analysis & Filtering . . . 27
1.3.1 Impedance . . . 29
1.3.2 Filters . . . 29

2 Digital Circuits **33**
2.1 Combinatorial and Sequential Networks . . . 33
2.1.1 Combinational . . . 35
2.1.2 Sequential . . . 37
2.1.3 Shift registers . . . 41
2.1.4 Multiplixer . . . 41

3 Op-Amp **43**
3.1 Inside Op-Amp . . . 43
3.2 Implementation of Op-Amp . . . 44
3.2.1 Non inverting (with feedback loop) . . . 44
3.2.2 Voltage follower . . . 45
3.2.3 Inverting . . . 46
3.2.4 Summing . . . 47

3.3 General example . . . 48

4 Resistors **51**

5 Capasitors **53**

6 Semiconductors **55**

7 Transistors **57**

8 Analog to Digital Converter **59**
8.1 Nyquist–Shannon Sampling Theorem . . . 59
8.2 Analysing ADC Outputs in the Frequency Domain . . . 60
8.2.1 Channeliser . . . 60
8.3 ADC Specifications . . . 61
8.4 ADC types . . . 61
8.4.1 Successive Approximation (SAR) ADC . . . 61
8.4.2 Delta-Sigma ($\Delta\Sigma$) ADC . . . 61
8.4.3 Flash ADC . . . 61
8.4.4 Pipelined ADC . . . 61
8.5 ADC Noise and Error Sources . . . 61
8.5.1 DC Bin . . . 62
8.6 ADC Interfacing . . . 62
8.7 Sampling . . . 62
8.7.1 Real-Time Sampling . . . 62
8.7.2 IQ Sampling (In-Phase and Quadrature Sampling) . . . 62
8.7.3 Nyquist Sampling . . . 63
8.7.4 Oversampling . . . 63
8.7.5 Undersampling (Bandpass Sampling) . . . 63
8.7.6 Random sampling (Non-Uniform Sampling) . . . 63
8.7.7 Compressed Sampling (Compressive Sampling) . . . 63
8.7.8 Event-Based Sampling . . . 63
8.7.9 Block Sampling . . . 63
8.7.10 Synchronous vs. Asynchronous Sampling . . . 63
8.8 Advanced Techniques . . . 63

Chapter 1

Digital Technology and Electronics

Resorcess

- https://www.falstad.com/circuit/circuitjs.html
- http://www.32x8.com/var4kmapx.html
- https://www.tinkercad.com/dashboard?type=circuits&collection=designs
- https://www.symbolab.com/solver/system-of-equations-calculator

1.1 Circuit Theory

1.1.1 Basic electical quantities

Current

$i(A)$: amps

Positive repels Positiv. Negative repels Negative. Positive and Negative force of attraction. Copper is commonly used in wires since there is only one electron in last orbital. This makes it easy to move therefore it is higly conductive.

$I = q^{-}/sec$ Current is charge per second.

Current is writen from Positiv to Negative. Since back in history Ben Franklin who studied elektriesaty and came up with theories. However, they were unaware that electrons exsisted and there fore made the false assumption that the current goes from positive to negative. With infact the electron is attracted to the positive end and therefore flows that way. Ben Franklin 1747. JJ Thompson 1897 e^{-}. However positve chage dose exist like in your body then it would be true.

Electron current is from negative to possitive. Conventional current (the current we know as) is from positive to negative.

Voltage

$v(V)$: volt
Voltage is simmular to gravity. It is the potential difference in the two pols, in otherwords like potatial enegry like in the gravity analagy.

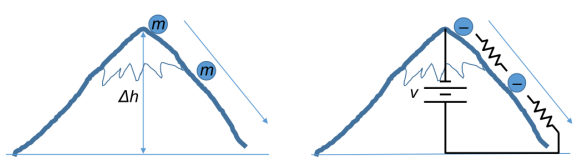

Figure 1.1: volt. From **de**

$V = \frac{\Delta U}{q}$ Where ΔU is the potational energy diffrent and q is charge particle

Power

Power is defined as the rate energy (U) is transformed or transferred over time. We measure power in units of joules/second, also known as watts. 1 watt = 1 joules / second)

An electric circuit is capable of transferring power. Current is the rate of flow of charge, and voltage measures the energy transferred per unit of charge. We can insert these definitions into the equation for power: $p = \frac{dU}{dt} = \frac{dU}{dq} \cdot \frac{dq}{dt}$. ($dU = \Delta U$)

$$p = v * i \tag{1.1}$$

1.1.2 Prefixes

Number	Prefix	Symbol	Note
10^{+10}	tera-	T	
10^{+9}	giga-	G	
10^{+6}	mega-	M	
10^{+3}	kilo-	k	the only > 1 prefix in lower case
10^{0}			
10^{-3}	milli-	m	
10^{-6}	micro-	μ	be careful μ *mu* doesn't turn into "m"
10^{-9}	nano-	n	
10^{-12}	pico-	p	

1.1.3 Unit grammar

Symbol name	example names	Symbol	example symbols	Named after
second	1 millisecond	s	$2ns$	
meter	300 kilometer	m	$35nm35$	
hertz	10 kilohertz	Hz	$100MHz$	Hertz
ohm	2 megohm	Ω	$47k\Omega$	Ohm
farad	10 picofarad	F	$220pF220$	Faraday
ampere	35 microamp	A	$65mA$	Ampère
volt	11 kilovolt	V	$5\mu V$	Volta

1.1.4 Ohm's law

- V (Voltage): V (volt)
- I (Current): A (amps)
- R (Resistance): Ω (omega)

$$V = IR \tag{1.2}$$

1.1.5 Circuit elements

1.1.6 Circut termenology

- *Closed circuit* – A circuit is closed if the circle is complete if all currents have a path back to where they came from.

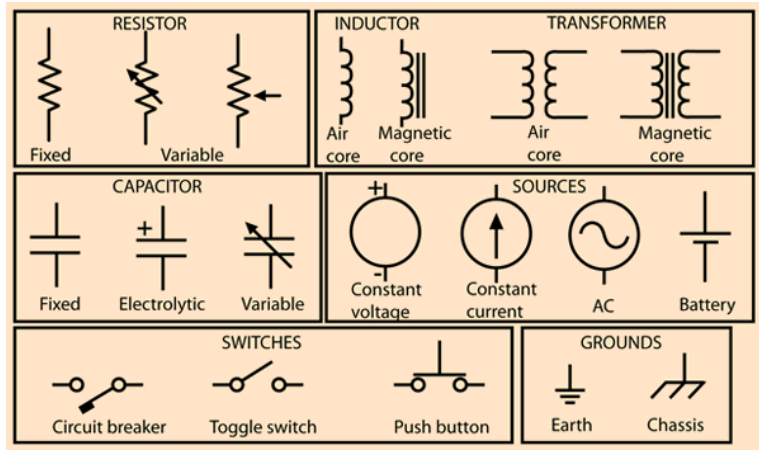

Figure 1.2: From Circuit elements

- *Open circuit* – A circuit is open if the circle is not complete if there is a gap or opening in the path.
- *Short circuit* – A short happens when a path of low resistance is connected (usually by mistake) to a component. The resistor shown below is the intended path for current, and the curved wire going around it is the short. Current is diverted away from its intended path, sometimes with damaging results. The wire shorts out the resistor by providing a low-resistance path for current (probably not what the designer intended).
- *Node* - Between elements
- *Branch* - path between two noodes.
- *Loop* - Close path in a circuit (Branch - Nodes + 1)

1.1.7 Series Resistor

$$R_{series} = R_1 + R_2 + \ldots + R_n \tag{1.3}$$

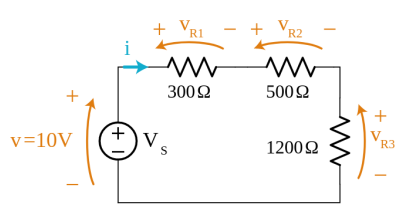

Figure 1.3: voltage distributes between resistors in series. From

$$R_{series} = 300\Omega + 500\Omega + 1200\Omega = 2000\Omega$$
$$i = \frac{v}{R_{series}} = \frac{10V}{2000\Omega} = 5mA$$

$$v_{R1} = i \cdot R1 = 5mA \cdot 300\Omega = 1.5V$$
$$v_{R2} = i \cdot R2 = 5mA \cdot 500\Omega = 2.5V$$
$$v_{R3} = i \cdot R3 = 5mA \cdot 1200\Omega = 6.0V$$
$$10V - 1.5V - 2.5V - 6.0V = 0V \text{ Therefore correct}$$

1.1.8 Parralel resistor

$$\frac{1}{R_p} = \frac{1}{R_1} + \frac{1}{R_2} \tag{1.4}$$

$$R_{parallel} = \frac{1}{\frac{1}{R_1} + \frac{1}{R_2}} \tag{1.5}$$

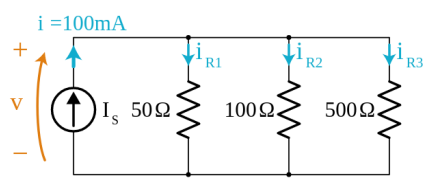

Figure 1.4: current distributes between resistors in parallel. From

$$R_{parallel} = \frac{1}{\frac{1}{R_1} + \frac{1}{R_2} + \frac{1}{R_3}}$$
$$R_{parallel} = \frac{1}{\frac{1}{0.02} + \frac{1}{0.01} + \frac{1}{0.002}} = \frac{1}{0.032} = 31.25\Omega$$
$$v = i \cdot R_{parallel} = 100mA \cdot 31.25\Omega = 3.125V$$

$$i_{R1} = \frac{v}{R1} = \frac{3.125V}{50\Omega} = 62.5mA$$
$$i_{R2} = \frac{v}{R2} = \frac{3.125V}{100\Omega} = 31.25mA$$
$$i_{R3} = \frac{v}{R3} = \frac{3.125V}{500\Omega} = 6.25mA$$
$$100mA - 62.5mA - 31.25mA - 6.25mA = 0mA \text{ Therefore correct}$$

1.1.9 Simplify resistor network

Start from the furthest point. Make parallel and serial resistors become one.

1.1.10 Voltage divider

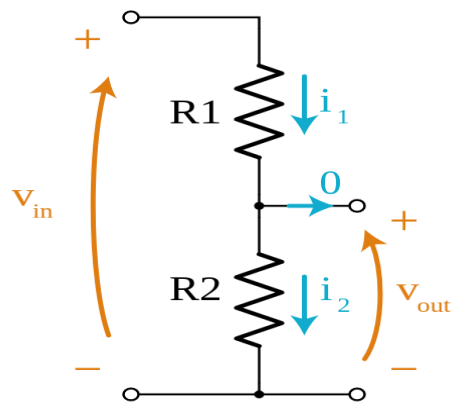

Figure 1.5: voltage-divider. From

$$
\begin{aligned}
v_{in} &= i(R_1 + R_2) \Rightarrow I = \frac{1}{R_1 + R_2} v_{in} \\
v_{out} &= iR_2 \Rightarrow v_{out} = \frac{R_2}{R_1 + R_2} v_{in} \\
&= \frac{1}{\frac{R_1}{R_2} + 1} v_{in}
\end{aligned}
$$

1.1.11 Kirchhoff's laws

Kirchhoff's current law

KCL

$$\sum i_{in} = \sum i_{out} \tag{1.6}$$

Kirchhoff's voltage law

KVL

$$\sum_n V_n = 0 \tag{1.7}$$

$$\sum V_{rise} = V_{drop} \tag{1.8}$$

1.1.12 Node voltage method

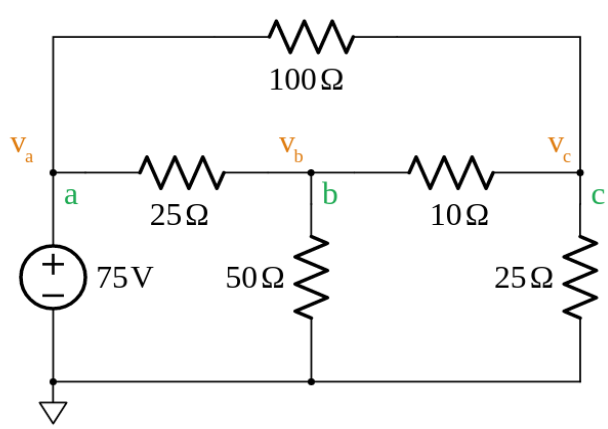

Figure 1.6: Example node voltage method. From

1. **Assign a reference node (ground).**
Assign it under Voltage sorce

2. **Assign node voltage names to the remaining nodes.**
See imgage for $v_a,\ v_B,\ v_c,\ a,\ b,\ c$

3. **Solve the easy nodes first, the ones with a voltage source connected to the reference node.**
V_a is the easyest since it is the same as the input $v_a = 75V$

4.**Write Kirchhoff's Current Law for each node. Do Ohm's Law in your head.**
Node b: $+\dfrac{v_a - v_b}{25} - \dfrac{v_b}{50} + \dfrac{v_c - v_b}{10} = 0$
Node c: $+\dfrac{v_a - v_c}{100} - \dfrac{v_b - v_c}{10} + \dfrac{v_c}{25} = 0$

5.**Solve the resulting system of equations for all node voltages.**
Node b: $-\dfrac{v_b}{25} - \dfrac{v_b}{50} - \dfrac{v_b}{10} + \dfrac{v_c}{10} = -\dfrac{v_a}{25}$
$\Rightarrow -\dfrac{8}{50}v_b + \dfrac{1}{10}v_c = -\dfrac{75}{25} = -3$
Node c: $+\dfrac{v_b}{10} - \dfrac{v_c}{100} - \dfrac{v_c}{10} + \dfrac{v_c}{25} = -\dfrac{v_a}{100}$
$\Rightarrow +\dfrac{1}{10}v_b - \dfrac{15}{100}v_c = -\dfrac{75}{100} = -\dfrac{3}{4}$

Solve by gauseelimination and then get $v_b = +37.5V,\ v_c = +30V$

6.**Solve for any currents you want to know using Ohm's Law.**
$i_{ab25\Omega} = \dfrac{75 - 37.5}{25} = 1.5A$ arrow pointing right
$i_{bg50\Omega} = \dfrac{37.5}{50} = 0.75A$ arrow pointing down
$i_{bc10\Omega} = \dfrac{37.5 - 30}{10} = 0.75A$ arrow pointing right
$i_{ac100\Omega} = \dfrac{75 - 30}{100} = 0.45A$ arrow pointing right
$i_{cg25\Omega} = \dfrac{30}{25} = 1.2A$ arrow pointing down

1.1.13 Mesh current method

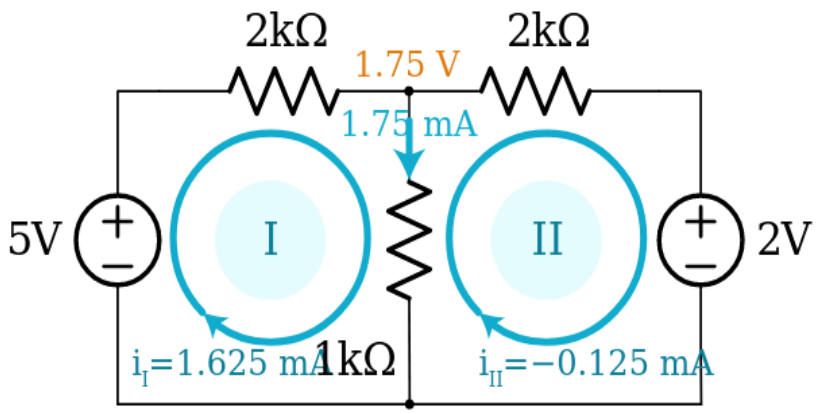

Figure 1.7: Mesh current method. From

Mesh I:
+ The voltage sorce − voltage drop over first resistor − voltage over second resitor = 0 (KVL)
$+ 5V - 2000i_I - 1000(i_I - i_{II}) = 0$

Mesh II:
+ Voltage over first resistor − Voltage over second resistor − Voltage sorce
$+ 1000(i_I - i_{II}) - 2000i_{II} - 2V = 0$

Gauseelimination gives us $i_{II} = -0.125mA,\ i_I = +1.625mA$

1.1.14 Capacitor i-v equation

$$i = C\frac{dv}{dt},\ v = \frac{1}{C}\int_0^T idt + v_0 \tag{1.9}$$

- C is the capacitance, a physical property of the capacitor (ex: $10\mu F$)
- $\frac{dv}{dt}$ reate of change for volt over time (ex: $100volts/second$)

1.1.15 inductor i-v equation

$$v = L\frac{di}{dt},\ \frac{1}{L}\int_0^T vdt + i_0 \tag{1.10}$$

- L is the inductance, a physical property of the inductor (ex: $1mH$)

- $\frac{di}{dt}$ is the reate of change for the current over time (ex: $300 ampere/second$)

1.1.16 RC circuit

RC natural response

When initializes the circuit with a voltage and the capacitor will then be charged. Then we disconnect the voltage source, the capasitor will act as a battary and edvenshula discharge.

$$v(t) = v_0 e^{-t/RC} \tag{1.11}$$

- Time constant: $\tau = RC$. It is the time it takes to charge the capacitor, through the resistor.
- v_0 is the voltage at $t = 0$

Example:

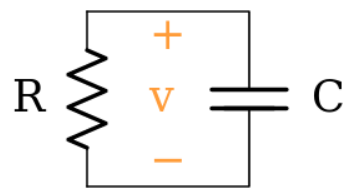

Figure 1.8: EX RC natural response. From

a. Write the expression for $v(t)$

$v(t) = V_0 e^{-t/RC} = 1.4e^{-t/(3k\Omega \cdot 1\mu F} 1.4e^{-t/3ms}$

b. What is $v(t)$ **when** $t = RC$**?**

$\tau = RC = 3 \times 10^3 \cdot 1 \times 10^{-6} = 3ms$

$v(3ms) = 1.4e^{-3ms/3ms} = 1.4 \cdot 1.4 \cdot 0.3679 = 0.515V$

c. Plot $v(t)$

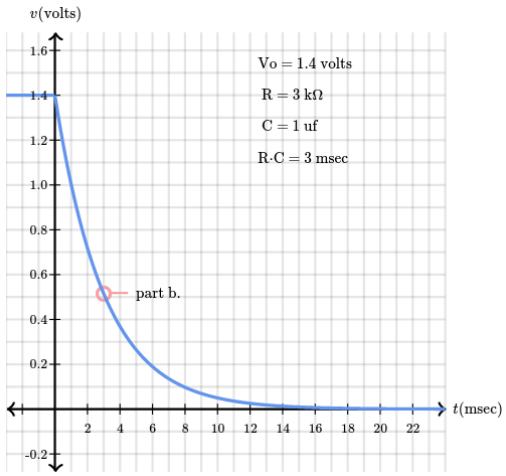

Figure 1.9: Plot RC natural response. From

RC step response

$$\text{Total} = \text{Forced response} + \text{Natural response} \tag{1.12}$$

- Foreced response: No start charge on capasitor and connected voltage supply
- Total responsee: what the circuit actoaly response.

$$v(t) = V_s + (V_0 - V_S)e^{-t/RC} \tag{1.13}$$

- V_S is the height of the voltage step
- V_0 is the inital voltage on the capacitor

LC natural response

$$s^2 + 1/LC = 0 \tag{1.14}$$

Euler's identities

$$e^{+jx} = \cos x + j \sin x$$
$$e^{-jx} = \cos x - j \sin x$$

where j is the name for $\sqrt{-1}$
Current function of time

$$i(t) = \sqrt{\frac{C}{L}} V_0 \sin \omega_o t \tag{1.15}$$

Natural frequency of LC circuit

$$\omega_0 \equiv \sqrt{\frac{1}{LC}} \tag{1.16}$$

RLC

The RLC end text circuit is the electronic equivalent of a swinging pendulum with friction.

$$s = \frac{-R \pm \sqrt{R^2 - 4L/C}}{2L} \tag{1.17}$$

$$s = -\alpha \pm \sqrt{\alpha^2 - \omega_o^2} \tag{1.18}$$

where $\alpha = \frac{R}{2L}$ and $\omega_o = \frac{1}{\sqrt{LC}}$

1.2 Semiconductors

Semiconductors electrical conductivity is between conductors and insulators. The material becomes more "conductivity" or less resistance when the temprature rises. This behavier is oposite to that of metals.

1.2.1 Diodes

Ideal diodes

Cundoct electrisity only one way. Current flowes threow Anode (A) to Cathode (K).

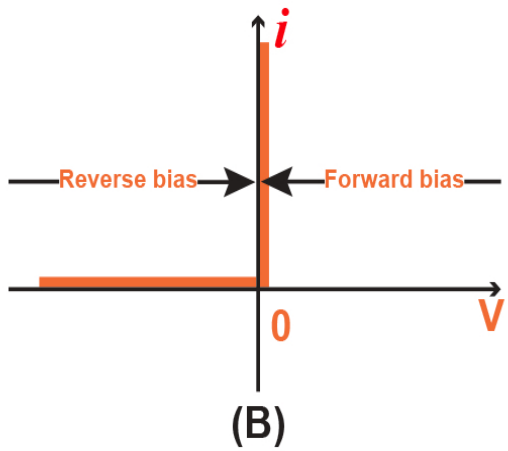

Figure 1.10: ideal diode iv-curv. From

Real diodes

reverse brakedown is when the diode lets negative current. On normal diodes it will perminantly fail, probably melts.

$$i = I_s(e^{qv_d/kT} - 1) \tag{1.19}$$

- k is boltsmans constant ($1.38 * 10^{-23} J/K$ Jouls/Kelvin) $0K = -273^oC$
- T is tempreture of device (kelvin)
- I_s is structual current (silicon $10^{-12}A$), the small reverse current
- q is the charge of an electron ($1.1609 * 10^{-19}C$)

Difficult to use formula unless numerical analasys.

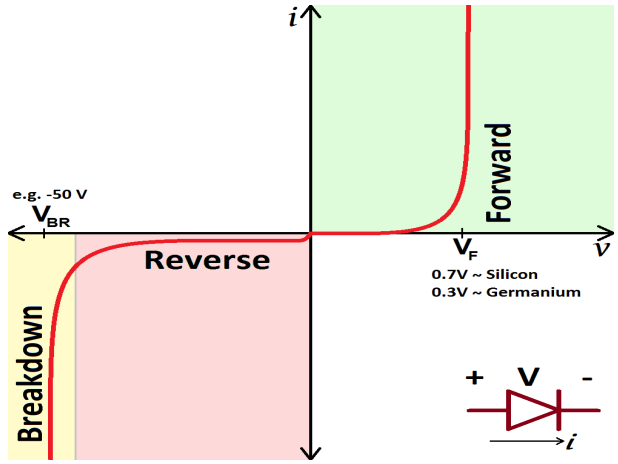

Figure 1.11: real diode iv-curv. From

The DC model of a diode

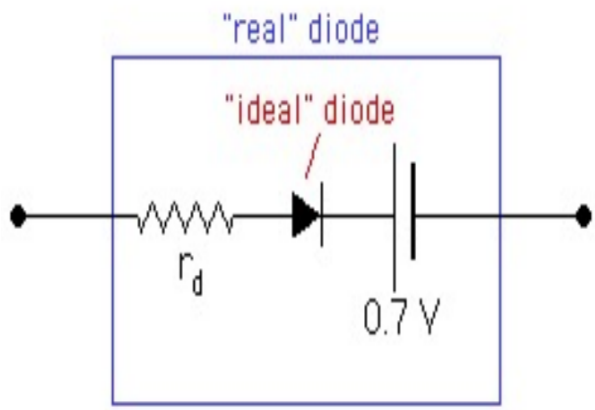

Figure 1.12: real diode dc model. From

Example: diode

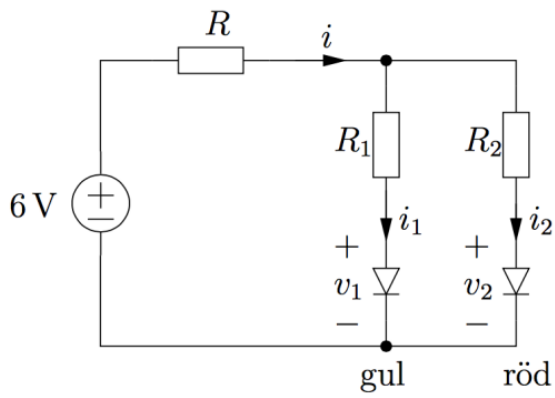

Figure 1.13: diodes example. From

$$i_1 = 40mA, v_1 = 2v$$
$$i_2 = 50mA, v_2 = 1.6v$$

Kirchhoffs strömlag: $i = i_1 + i_2 = 40mA + 50mA = 90mA = 0.09A$

Kirchhoffs spänningslag: (Loop 1)

$$+6 - iR - R_1 i_1 - 2 = 0$$

Kirchhoffs spänningslag: (Loop 2)

$$+6 - Ri - R_2 i_2 - 1.6 = 0$$

Vi har 3 okända och 2 eqvationer.Närmed så kan vi sätta ett värde på R sådant att motstånden ärstöre än noll

$$R = 20\Omega \Rightarrow R_1 = 55\Omega; R_2 = 52\Omega$$

Zener Diodes

Allows to enter and reenter the revese breakedown with out perminantly failing. symbol. Jusaly lower voltage for revese breakdown used for analog to digital conversion and vise versa and a voltage relulator.

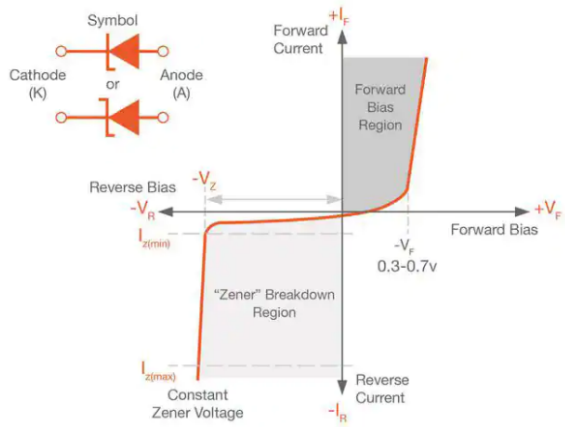

Figure 1.14: zener diode iv-curv. From

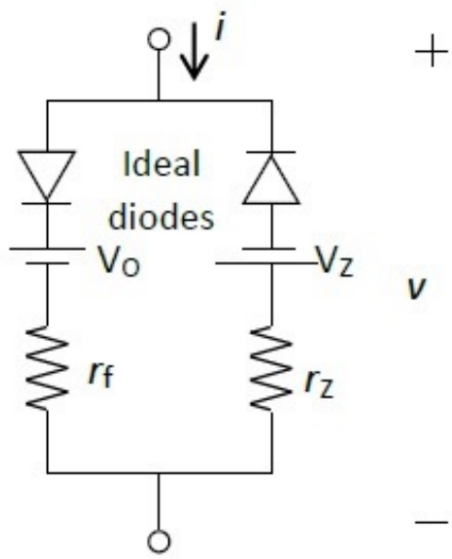

Figure 1.15: zener diode dc model. From

Example Let $V_{in} = 9V$ and $V_z = 5V$. Determent the minimum value of R if the maximum current is $20mA$ threw R, assume $R_L = \text{inf}$. Then determan the minimum resistance for R_L

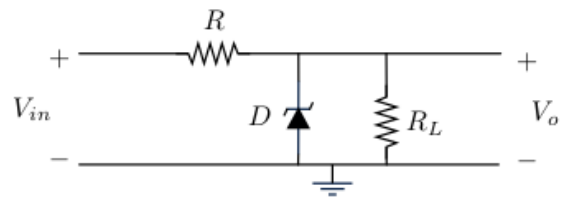

Figure 1.16: zener diode example. From

Let I be the current over R, I_1 the current over the zener diode and I_2 be the current over R_L.

$$I = \frac{V_{in} - V_o}{R}$$
$$\Rightarrow R > \frac{9-5}{20 \cdot 10^{-3}}\Omega = 200\Omega$$

KCL: $I = I_1 + I_2$

$$I_1 = 0 \text{ if } R_L \text{ is to low}$$
$$I_2 = \frac{V_0 - 0}{R_L}$$
$$\Rightarrow I = I_2 \Rightarrow 20mA = \frac{5v}{R_L}$$
$$\Rightarrow R_L > \frac{5}{20 \cdot 10^{-3}}\Omega = 250\Omega$$

1.2.2 Transistors

All Semiconductors are non linuer. But we can use transistors with linjer modules.
NPN and PNP symbols. Base (B), Collector (C) and Emitter (E)

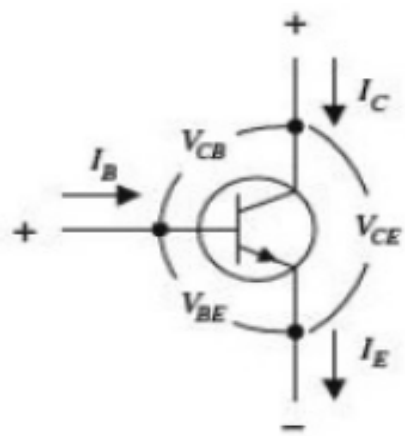

Figure 1.17: Transistor NPN. From

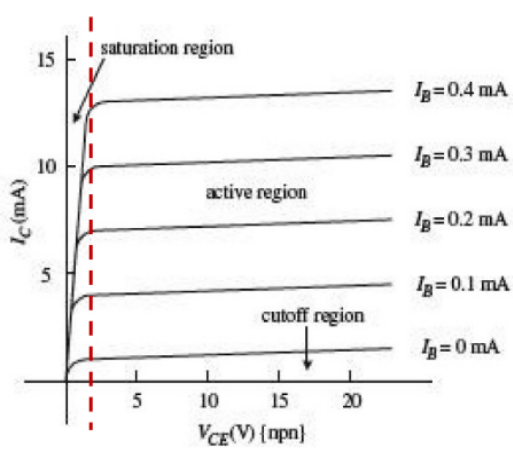

Figure 1.18: Transistor Operational mode. From

Transistor modes

Cutoff: Open switch

$$I_B = I_E = I_C = 0$$
$$V_{BE},\ V_{BC} < 0$$

Saturation: Closed switch

$$V_{CE} <= V_{CEsat}, I_B > 0$$

Active: Dependent current source

$$I_E = I_B + I_C,\ I_C = h_{EF} I_B = \beta I_B$$
$$V_{CE} > V_{CEsat}, I_B > 0, V_{BC} = V_B - V_C < 0$$

Example: Transistor What is the larges value tjat R_B can have so that the transistor behaves as a switch (saturation mode)? The transistor has a current gain h_{FE} between 100 and 300. Suppose that $V_{CE,sat} = 0.2V$ and $V_{BE,sat} = 0.7$.

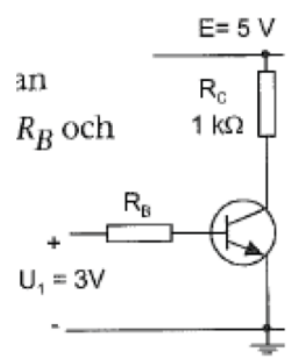

Figure 1.19: Transitor example. From

Om transistorn är bottnad (max current) gäller det att potatialen i C (mellan R_C och transistorn)

$$V_{CE} = V_C - V_E = V_C - 0 = V_{CE,sat}$$
$$V_C = V_{CE,sat} = 0.2V$$

$\Rightarrow$ Vi har då ett spänningsfall över R_C på $5 - 0.2 = 4.8V$.

$$R_C \cdot I_C = 4.8V \quad \text{Ohm's law} \Rightarrow I_C = \frac{4.8}{10^3} = 4.8mA$$

Vi vet att $I_C = \beta \cdot I_B$ men är ej säkra på β:s värde. Det kan vara så långt som 100.

Vi kan behöva $I_B = \frac{I_C}{100} = 48\mu A$ för att inte I_C ska bli för liten. Alltså: $I_B > 48\mu A$ för att garantera bottnad transistor.

Betrakta nu slingan där I_B går.
Potentialvandring: $U_1 - R_B I_B - V_{BE,sat} = 0, 3 - R_B I_B - 0.7 = 0$
eller $2.3 = R_B I_B \Leftrightarrow I_B = \frac{2.3}{R_B}$

Använd olikhet $I_B > 48\mu A \Rightarrow \frac{2.3}{R_B} > 48\mu A \Rightarrow \frac{2.3}{48 \cdot 10^{-6}} > R_B$ eller $R_B < 47.9k\Omega$

1.3 AC Circuit Analysis & Filtering

Note: $G(\omega) = H(\omega)$

- *sinusoidal steady state* same as AC (analysis)
- *phasor* a complex number representation of sinusoid
- *transfer function* relationsip with input and output voltage $G(jw) = \frac{v_{out}}{v_{in}}$
- *Impedance* representation of $\frac{v_{in}}{i}$ (z)
- *Angular frequency* $w = 2\pi f$ where f is frequency in Hz with is cycles per second
- *Operational frequency* $\frac{1}{\sqrt{2}}$

$$v(t) = v_p \cos wt + \phi \tag{1.20}$$

Phasor 3 representations

- Rectangular form $z = x + jy$
- polar form
- exponential form $z = ze^{j\phi}$

Phasor conversion

$$\begin{aligned}
r &= \sqrt{x^2 + y^2} \\
\phi &= \arctan \frac{x}{y} \\
x &= r\cos(\phi) \\
y &= r\sin(\phi) \\
e^{j\phi} &= \cos\phi + j\sin\phi \\
\cos\phi &= Re(e^{j\phi}) \\
\sin\phi &= Im(e^{j\phi})
\end{aligned}$$

Phasor operations

$$\begin{aligned}
\text{addition: } & z_1 + z_2 = (x_1 + x_2) + j(y_1 + y_2) \\
\text{subtraction: } & z_1 - z_2 = (x_1 - x_2) + j(y_1 - y_2) \\
\text{multiplication: } & z_1 z_2 = r_1 r_2 \underline{/(\phi_1 + \phi_2)} \\
\text{division: } & \frac{z_1}{z_2} = \frac{r_1}{r_2} \underline{/(\phi_1 - \phi_2)} \\
\text{inverse: } & \frac{1}{z} = \frac{1}{r} \underline{/-\phi} \\
\text{square root: } & \sqrt{z} = \sqrt{r} \underline{/(\phi/2)} \\
\text{complex conjugate: } & z^* = x - jy
\end{aligned}$$

Transfer function

$$H(j\omega) = |H(j\omega)|\underline{/H(j\omega)}$$
$$H(w) = \frac{v_o(w)}{v_i(w}$$

Euler formula

$$e^{jx} = \cos x + j \sin x$$
$$e^{-jx} = \cos x - j \sin x$$

They are used to represent sinus wave.

We instead calculate with complex exponsetioals with euler formula instead of sinus waves

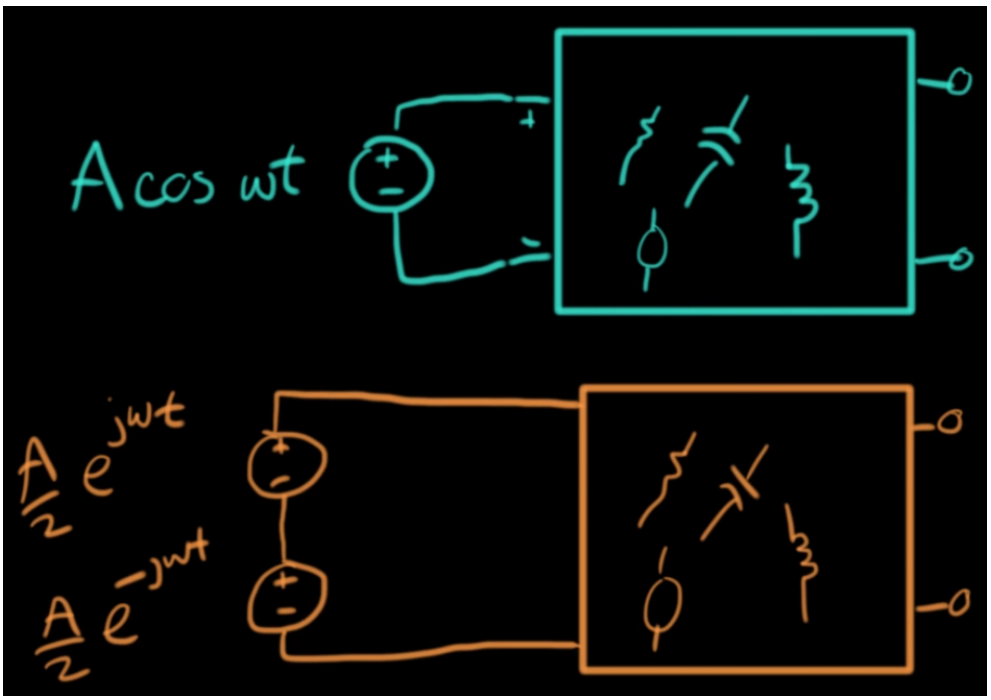

Figure 1.20: AC euler represent demostration. From

AC Resistor representation

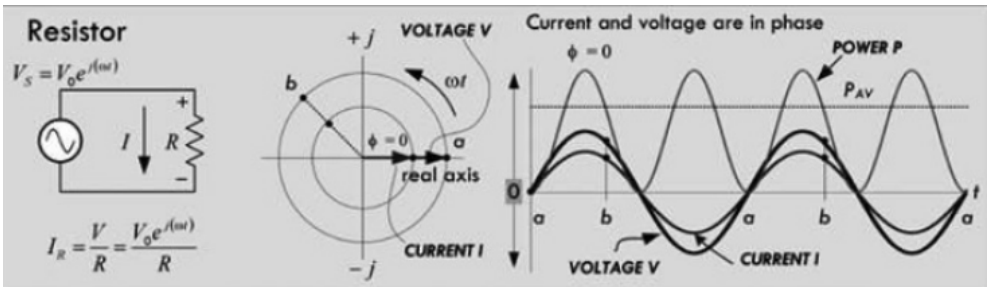

Figure 1.21: AC resistor represent. From

1.3.1 Impedance

Impedance $\frac{v_{in}}{i}$ (z)

$$\textbf{Resistor}: \quad \frac{v}{i} = R$$
$$\textbf{Inductor}: \quad \frac{v}{i} = jwl$$
$$\textbf{Capasitor}: \quad \frac{v}{i} = \frac{1}{jwc}$$

1.3.2 Filters

The filter can eather be active and passive filters:

- *Passive filters* only use active components like resistor, capasitor and inductor
- *Active filters* use opamp (can amplify output)

There are 4 common filtering types:

- *High-pass filter (HP)* lets higher frequencys threow
- *Low-pass filter (LP)* lets lower frequencys threow
- *Bandpass filter (BP)* within a frequency spand. Can be comind with HP and LP in series
- *Notch filter* oposit of BP

Filters can be constructed as follows:
RC filter, *RL Filter*, *LC filter*, *L-filter*, *π-filter* and *T-filter*.

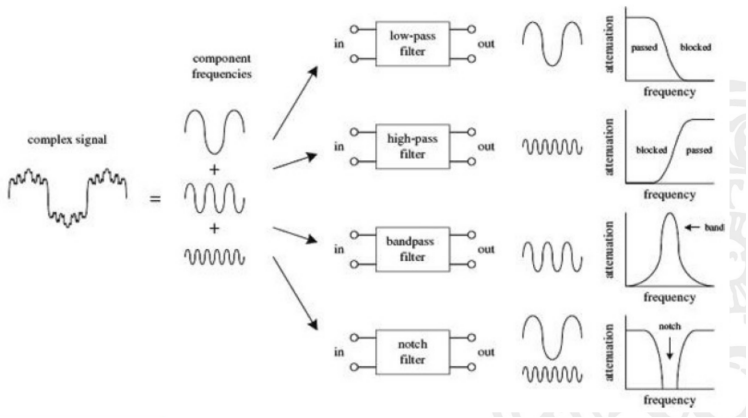

Figure 1.22: Signal filtering. From

Some resorces to construct filters

- RF tools

- Filterwizard

Example: HP filter

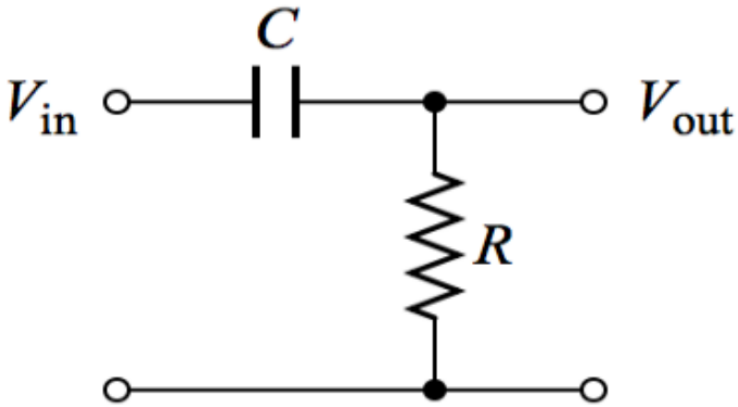

Figure 1.23: HP Filter Circuit.png. From

$$\begin{aligned} V_{out} &= V_{in}\frac{z_R}{z_C + z_R} \quad \text{-From voltage divider circuit} \\ &= V_{in}\frac{R}{\frac{1}{j\omega c} + R} \quad \text{-From impedance axiom} \\ &= V_{in}\frac{\frac{R}{1}}{\frac{R(j\omega c)+1}{j\omega c}} = V_{in}\frac{R(j\omega c)}{R(j\omega c) + 1} \end{aligned}$$

Therefore we get $G_{HP} = \dfrac{R(j\omega c)}{R(j\omega c) + 1}$

$$\begin{aligned} |G_{HP}| = \frac{1}{\sqrt{2}} &= \frac{R\omega c}{\sqrt{R^2\omega^2c^2 + 1}} \\ &\Rightarrow \frac{\sqrt{R^2\omega^2c^2 + 1}}{\sqrt{2}} = R\omega c \\ &\Rightarrow \frac{R^2\omega^2c^2 + 1}{2} = R^2\omega^2c^2 \\ &\Rightarrow R^2\omega^2c^2 + 1 = 2R^2\omega^2c^2 \\ &\Rightarrow R^2\omega^2c^2 = 1 \\ &\Rightarrow R\omega c = 1 \\ &\Rightarrow R = \frac{1}{\omega c} \end{aligned}$$

The following is given: $\omega = 2\pi f$, $1kHz$ for HP filter. The capacitor should not be larger than $2.2uF$. Therefore we chose $c = 1uF$, this gives us $R \approx 160\Omega$.

$$\begin{aligned} &arg(G_{HP}) = arg(\frac{160 \cdot 2 \cdot \pi \cdot 10^-6 \cdot f \cdot j}{160 \cdot 2 \cdot \pi \cdot 10^-6 \cdot f \cdot j + 1}) \\ &= arg(160 \cdot 2 \cdot \pi \cdot 10^-6 \cdot f \cdot j) - arg(160 \cdot 2 \cdot \pi \cdot 10^-6 \cdot f \cdot j + 1) \\ &= \frac{\pi}{2} - arctan(\frac{160 \cdot 2 \cdot \pi \cdot 10^-6 \cdot f}{1}) \\ &= \frac{\pi}{2} - arctan(\frac{\pi \cdot f}{3125}) \end{aligned}$$

$$
\begin{aligned}
arg(G_{HP}) &= arg(\frac{160 \cdot 2 \cdot \pi \cdot 10^{-}6 \cdot f \cdot j}{160 \cdot 2 \cdot \pi \cdot 10^{-}6 \cdot f \cdot j + 1}) \\
\Rightarrow \frac{z_1}{z_2} &= \frac{r_1}{r_2} \underline{/\phi_1 - \phi_2} \\
\Rightarrow \frac{z_1}{z_2} &= \frac{\sqrt{(0.32 \cdot 10^{-3} \cdot f\pi)^2}}{\sqrt{(0.32 \cdot 10^{-3} \cdot f\pi)^2 + 1}} \underline{/\arctan 0 - \arctan \frac{1}{0.32 \cdot 10^{-3} \cdot f\pi}} \\
\Rightarrow arg(\frac{z_1}{z_2}) &= -\arctan \frac{1}{0.32 \cdot 10^{-3} \cdot f\pi} \\
&= -\arctan \frac{1}{0.32 \cdot 10^{-3} \cdot f\pi} \\
&= \frac{\pi}{2} - \arctan \frac{f\pi}{3125}
\end{aligned}
$$

Example: exponential representation

$$
\begin{aligned}
H(j\omega) &= \frac{j\pi}{1 + j2\pi} = |H(j\omega)| e^{jarg(H(j\omega))} \\
\Rightarrow |H(j\omega)| &= \frac{\sqrt{\pi^2}}{\sqrt{1^2 + 2^2\pi^2}} = \frac{\pi}{\sqrt{1 + 4\pi^2}}
\end{aligned}
$$

$$
\begin{aligned}
arg(H(j\omega)) &= arg\Big(\frac{j\pi}{1 + j2\pi}\Big) = \arctan\Big(\frac{0}{\pi}\Big) - \arctan\Big(\frac{1}{2\pi}\Big) \\
&= \frac{\pi}{2} - \arctan\Big(2\pi\Big) \\
\Rightarrow H(j\omega) &= \frac{\pi}{\sqrt{1 + 4\pi^2}} e^{j \arctan\Big(2\pi\Big)}
\end{aligned}
$$

Series of filter

One can <u>commbind filters</u> to create more complex filters. The *transfer function* will be the <u>multiplication</u> of

$$G_{tot} = G_1 \cdot G_2 \cdot \ldots \cdot G_n \tag{1.21}$$

The *Gain* will be the <u>gain</u> for each <u>individual</u> transfer function <u>multiplied</u>

$$|G_{tot}| = |G_1| \cdot |G_2| \cdot \ldots \cdot |G_n| \tag{1.22}$$

The phase function is the sum of the phase functions

$$Arg(G_{tot}) = Arg(G_1) + Arg(G_2) + \ldots + Arg(\cdot G_n) \tag{1.23}$$

Chapter 2

Digital Circuits

2.1 Combinatorial and Sequential Networks

Logic Gates

Name	NOT	AND	NAND	OR	NOR	XOR	XNOR
Alg. Expr.	$\overline{A}$	AB	$\overline{AB}$	$A+B$	$\overline{A+B}$	$A \oplus B$	$\overline{A \oplus B}$
Symbol	A, x	A, B, x					
Truth Table	A X 0 1 1 0	B A X 0 0 0 0 1 0 1 0 0 1 1 1	B A X 0 0 1 0 1 1 1 0 1 1 1 0	B A X 0 0 0 0 1 1 1 0 1 1 1 1	B A X 0 0 1 0 1 0 1 0 0 1 1 0	B A X 0 0 0 0 1 1 1 0 1 1 1 0	B A X 0 0 1 0 1 0 1 0 0 1 1 1

Figure 2.1: Logic Gates. From

Bolean algebra (or: +), (and: ·)

$$(x')' = x$$

$$x + x = x$$

$$x \cdot x = x$$

$$x + (y + x) = (x + y) + z$$

$$x(yz) = (xy)z$$

$$x + x' = 1$$

$$x \cdot x' = 0$$

$$x(y + z) = xy + xz$$

$$x + yz = (x + y)(x + z)$$

$$x + 1 = 1$$

$$x + xy = x$$

$$x \cdot 0 = 0$$

$$xy + \overline{x}z = xy + \overline{x}z + yz$$

$$x + 0 = x$$

$$(x + y)(\overline{x} + z) = (x + y)(\overline{x} + z)(y + z)$$

$$x \cdot 1 = x$$

$$\overline{(x + y)} = \overline{x}\overline{y}$$

$$\overline{(xy)} = \overline{x} + \overline{y}$$

2.1.1 Combinational

$f(x_6, x_5, x_4, x_3, x_2, x_1, x_0) = x_6x_4(x_5 + x_3 + x_0) + x_2x_1$

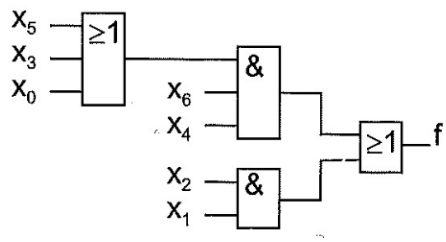

Figure 2.2: Bolean factorization. From

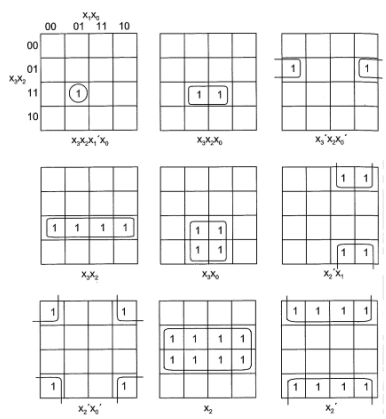

Figure 2.3: KMap patters. From

KMaps works from 4 variables.
Delays, there is a small delay for each gate.

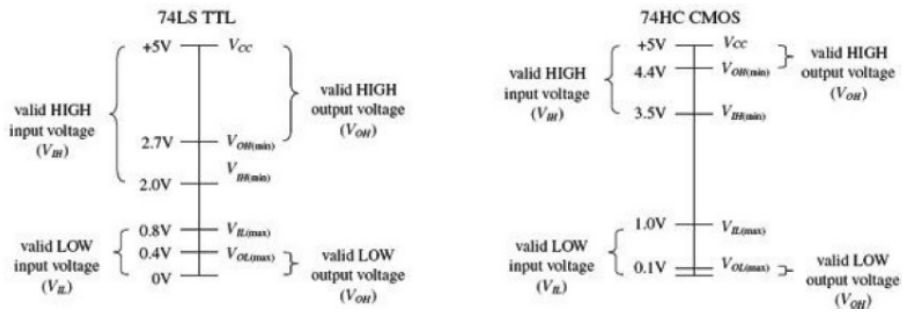

Figure 2.4: Logic families. From

Example: design circuit

$$f(x_3, x_2, x_1, x_0) = \sum(0, 2, 4, 5, 6, 7) + d(8, 10, 12, 14) \quad \text{- sum-of-products} \tag{2.1}$$

0 = 0000
2 = 0010
4 = 0100
5 = 0101
6 = 0110
7 = 0111

8 = 1000
10 = 1010
12 = 1100
14 = 1110

X_3X_2 \ X_1X_0	00	01	11	10
00	1	0	0	1
01	1	1	1	1
11	-	0	0	-
10	-	0	0	-

$$f = \overline{x_0} + \overline{x_3}x_2 \tag{2.2}$$

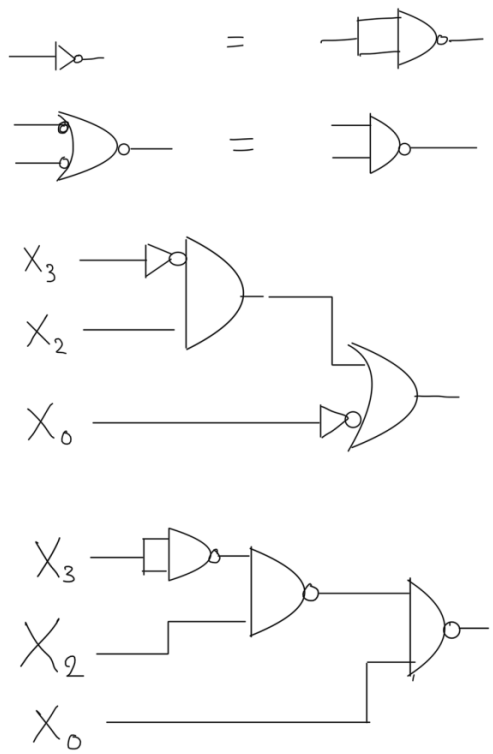

Figure 2.5: lodgic Combinational lodgic.

2.1.2 Sequential

Remembers the state what happend before.

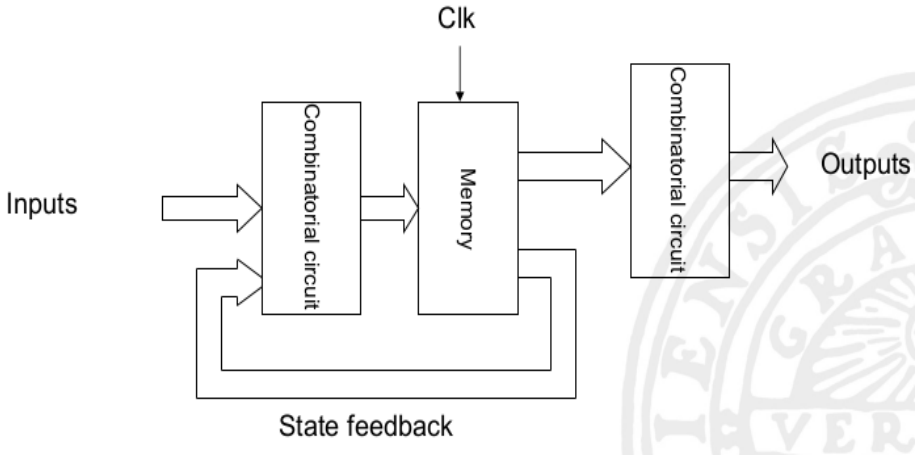

Figure 2.6: Sequential circuits moore type. From

Memory

Description	Circuit
SR-latch (memory cell)	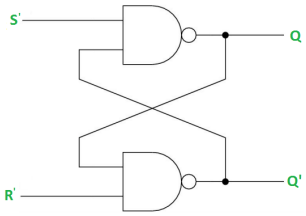
Gated SR-latch	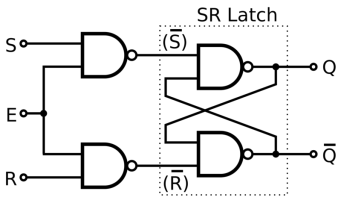
Gated D-latch	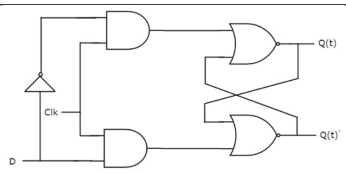
D Flip Flops	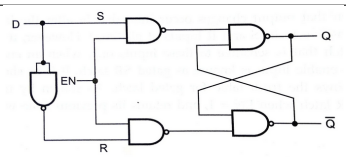

Table 2.1: Memory. From

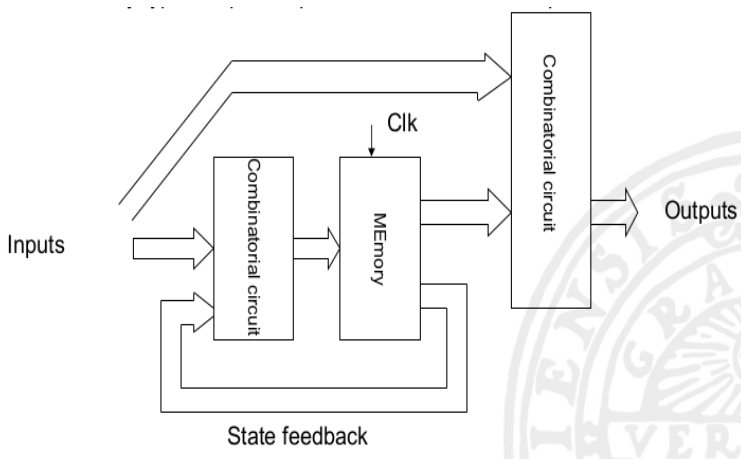

Figure 2.7: Sequential circuits mealy type. From

Timind diagram

State diagram

State code

State name	q_1	q_0
S0	0	0
S1	0	1
S2	1	0
S3	1	1

State Table In sequential circuits we use *state table* instead of *truth table*. ex of state table format:

Previus state	Input	Next state	Output
0 0	0	0 0	0
0 0	1	0 1	0
0 1	0	0 1	1
0 1	1	1 0	1

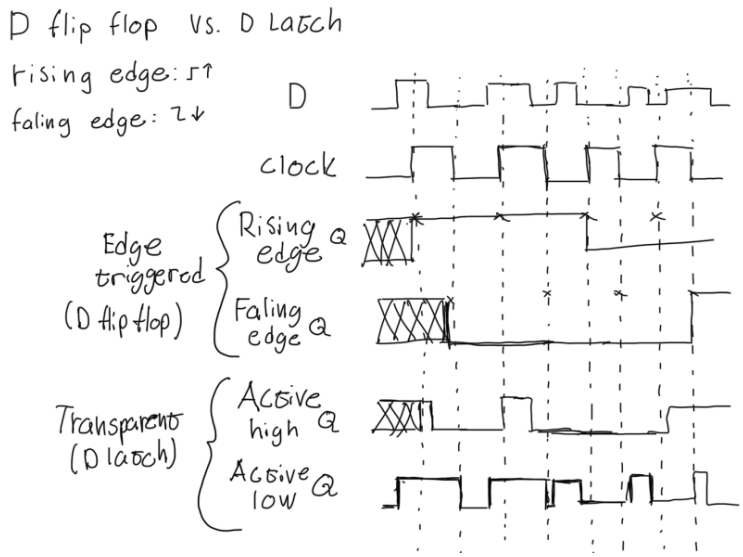

Figure 2.8: Timing diagram.

Moore-circuit Note: in more machine we need a end state for output 1
Mealy-circuit Note: in mealy machine we dont need that.

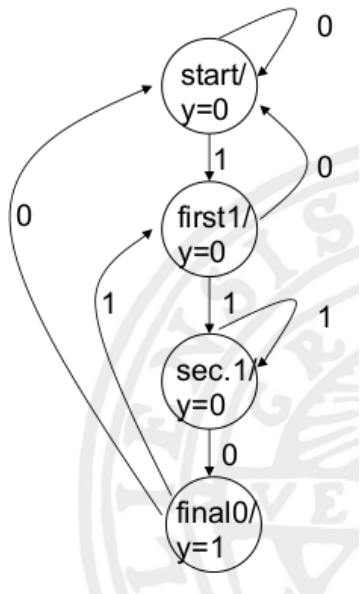

Figure 2.9: State diagram moore. From

2.1.3 Shift registers

Each pit is prosest simultaniusly. Makes much simpler circuit.

2.1.4 Multiplixer

$f(A, B, C) = \sum(0, 1, 5, 6)$

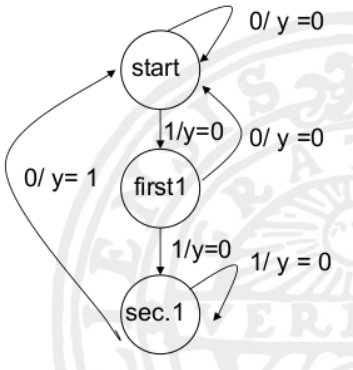

Figure 2.10: State diagram mealy. From

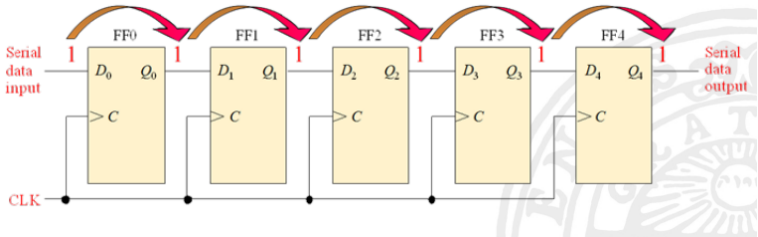

Figure 2.11: Shift register. From

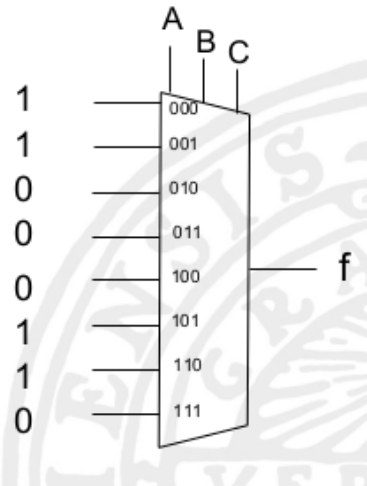

Figure 2.12: Mux. From

Chapter 3

Op-Amp

Op-Amp is a type of amplifier for data signals. Saturates mean that it will become a state line since it can not become more than the input nor can it be less than what is going in the opposite direction. $v_0 = A(v^+ - v^-)$

The current to v^- and v^+ will be close to zero and in an ideal circuit will be zero.
We can say $v^- = v^+$ when there is a feedback loop (negative terminal and non-inverting amp).

3.1 Inside Op-Amp

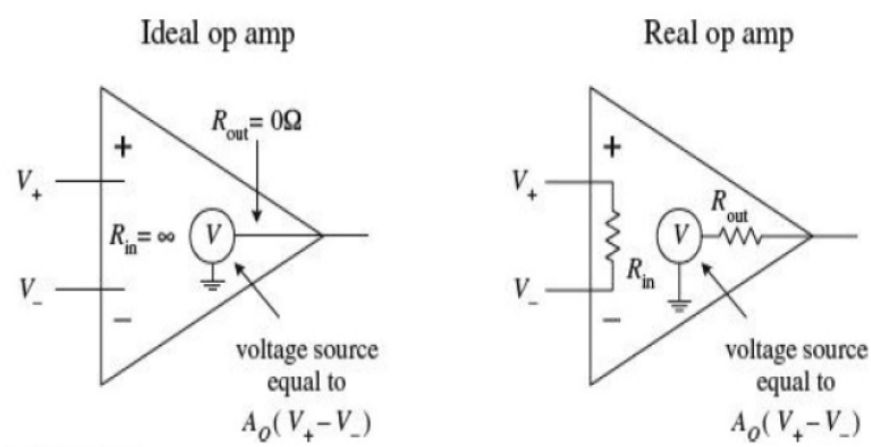

Figure 3.1: Inside opAmp. From

In ideal op amp the resistance will be infinity. However, the in reality there is no infinite resistance therefore if one would have a voltage divider with larger resistance then the internal resistance the current will go threw V_+ and V_-. The output in 0Ω so we will not have any voltage drop, not in reality, however.

3.2 Implementation of Op-Amp

Comparator

An op amp without negative feedback (a comparator)

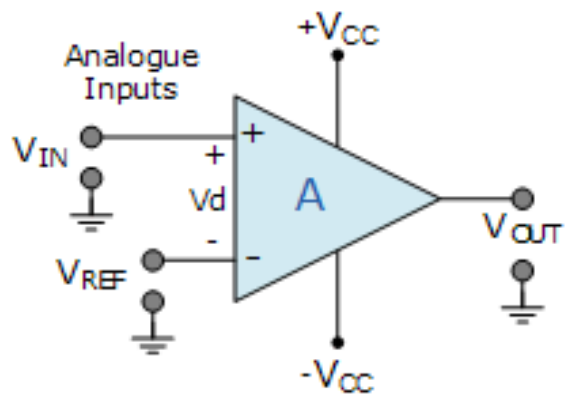

Figure 3.2: Op-Amp comparator. From

When $V_+ > V_-$ then $V_o = +V_{cc}$. When $V_+ < V_-$ then $V_o = -V_{cc}$

3.2.1 Non inverting (with feedback loop)

Amplifies the input but dose not change it sign (non inverting). An op amp with negative feedback (a non-inverting amplifier)

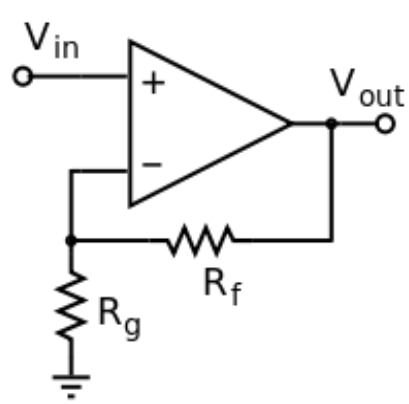

Figure 3.3: Op-Amp Feedback (Non inverting). From

3.2.2 Voltage follower

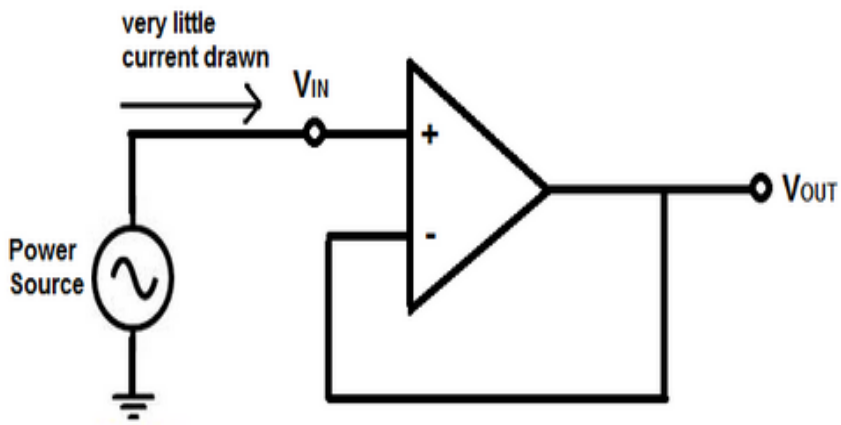

Figure 3.4: Op-Amp voltage follower. From

$v_+ = v_- = v_{in} = v_{out}$

3.2.3 Inverting

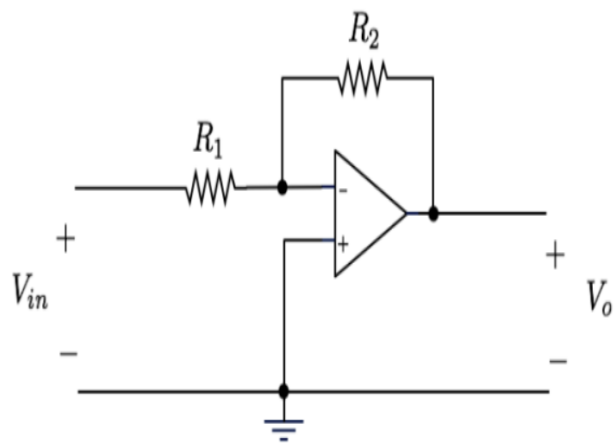

Figure 3.5: Op-Amp voltage follower. From

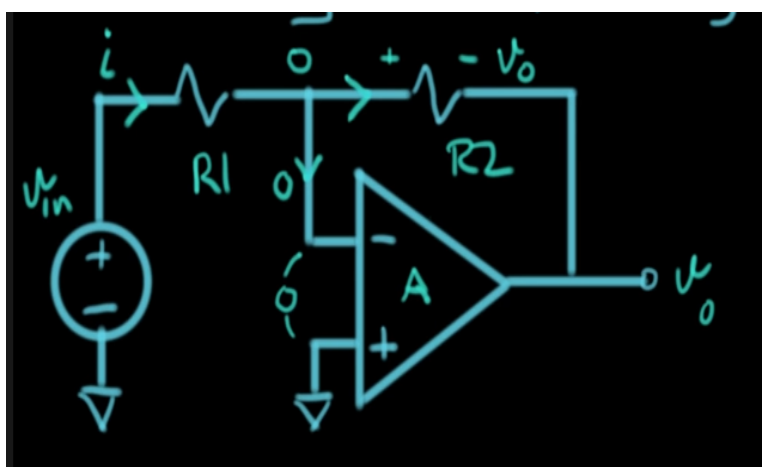

Figure 3.6: Op-Amp calculations for inverting. From

As seen from the image the current will be $i = v_{in}/R_1$ and $i = -v_0/R_2$. We combined them and get: $V_0 = \frac{-R_2}{R_1} V_{in}$

3.2.4 Summing

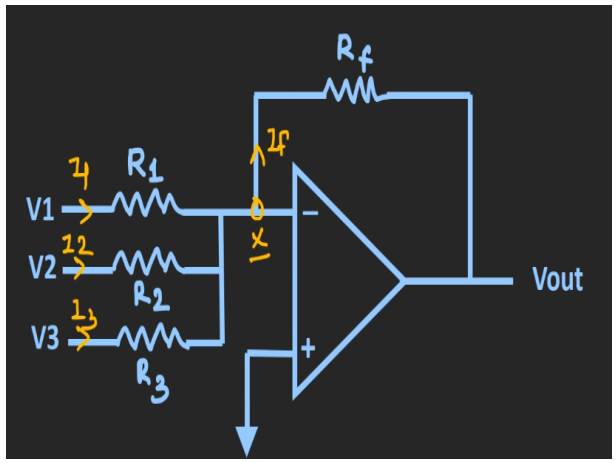

Figure 3.7: Op-Amp summing. From

Appling KCL we get: $I_f = I_1 + I_2 + I_3$ $\frac{v_1 - 0}{R_1} + \frac{v_2}{R_2} + \frac{V_3}{R_3} = \frac{0 - v_{out}}{R_f} \Rightarrow v_{out} = -(\frac{R_f}{R_1}V_1 + \frac{R_f}{R_2}V_2 + \frac{R_f}{R_3}V_3)$

3.3 General example

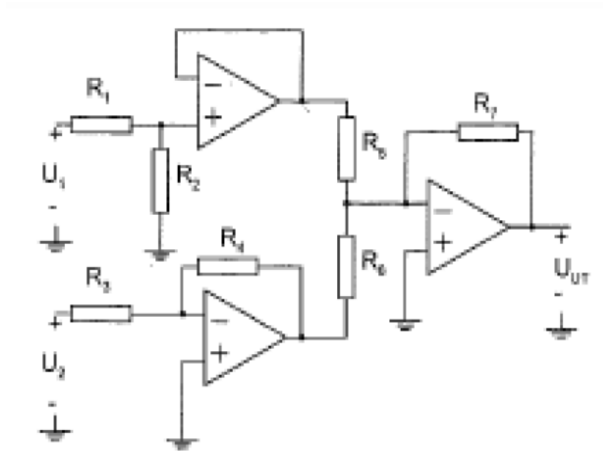

Figure 3.8: Op-Amp example. From

General observations: We can divide the circuit into three pieces. The one on the top is a *Voltage follower*, we can call it circuit 1. The one on the bottom is a *Inverting op-amp* as is the middle one. We can name the bottom one circuit 2 and the middle one is circuit 3.

We start with circuit 3:
We name node **A** between R_5 and R_6. KCL: $I = I_5 + I_6$ and $I = I_7$ since there is no current in $-$ terminal.
$I = \frac{-U_{ut}}{R_7} = I_5 + I_6 = \frac{v_{O1}}{R_5} + \frac{v_{O2}}{R_6}$
Because of Ohm's law and $v_{overresistor} = v_{head} - v_{tail}$.

To solve v_{O1} we need to solve circuit 1:
Applying KCL between R_1 and R_2 we get $I_1 = I_2 + I_3$ were $I_3 = 0$ since there is no current going in the + terminal. $I_1 = I_2$ Ohm's law result in $\frac{U_1 - v_{O1}}{R_1} = \frac{V_{O1} - 0}{R_2}$ since in a voltage follow circuit
$v^- = v^+ = v_{out}$. We then get $v_{out} = \frac{R_2}{R_1 + R_2} U_1$
then $I_5 = \frac{R_2}{(R_1 + R_2)R_5} U_1$.

To solve v_{O2} we need to solve circuit 2:
KCL gives $I_3 = I_4$ since there is no current in $-$ terminal.
Ohm's law $\frac{U_2 - v^-}{R_3} = \frac{v^- - v_{O2}}{R_4}$.
$v^- = v^+ = 0$ with result in $\frac{U_2}{R_3} = \frac{-v_{O2}}{R_4}$.
$v_{O2} = \frac{-R_4}{R_3} U_2$
The current $I_6 = \frac{-R_4}{R_3 R_6} U_2$

Going back to circuit 3:

$I = I_5 + I_6 = \frac{R_2}{(R_1+R_2)R_5}U_1 + \frac{-R_4}{R_3R_6}U_2$
results in $\frac{-U_{ut}}{R_7} = \frac{R_2}{(R_1+R_2)R_5}U_1 + \frac{-R_4}{R_3R_6}U_2$.
Final result: $U_{out} = -R_7(\frac{R_2}{R_5(R_1+R_2)}U_1 - \frac{R_4}{R_3R_5}U_2)$

Chapter 4

Resistors

Chapter 5

Capasitors

Chapter 6

Semiconductors

Chapter 7

Transistors

Chapter 8

Analog to Digital Converter

An Analog to Digital Converter (ADC) samples a voltage value. It can be used for signals with AC components or sample reading out of DC components. Sensor has either an internal ADC, providing a digital interface, or an external ADC. For example, temperature and humidity sensors provide a difference in voltage level, thus only a DC component, making a cheaper low sampling rate ADC sufficient. Other sensor like an accelerometer could either static or slow changing thus only seen as DC component. An accelerometer could also be seen as a signal, e.g., with shock or vibrations, where the signal could be converted to the frequency domain. For RF signals the ADC provides the signal in the time domain but then later converted to the frequency domain.

The scope of this compendium is to describe:

1. How the analog circuit can manipulate the signal to improve the performance of an ADC;
2. The internals of an ADC;
3. And what comes just after ADC, e.g., representing in the frequency domain.

What comes after a converting from time domain to frequency domain will not be covered in this compendium.

8.1 Nyquist–Shannon Sampling Theorem

Nyquist–Shannon sampling theorem defines the minimal sampling rate required to perfectly reconstruct a continues-time signal from its discrete samples, without losing information. The theorem only applies to band-limited signals, i.e., no high frequency components above a certain maximum frequency $f_{\max}$. Usually this is achieved by low-pass filters.

$$f_s \geq 2 \times f_{\max} \tag{8.1}$$

where f_s is the sampling frequency.

If there are high frequency components it can appear as lower frequencies in the sampled signal, due to a phenomenon called alias. See Figure **??** for the alias effect.

Perfect anti-alias filters, i.e., low pass filters, are impossible in the real world. However, the theorem provides a critical guideline for digital signal processing.

Some systems are intentionally undersampled then, having a low pass filter significantly higher than Nyquist sampling rate, i.e., $f_{\max}$. Then there needs to be some additional mechanism to distinguish the higher frequencies components. In other words determine which *Nyquist zone* it belongs. There are always

infinity number of Nyquist zones, however, there should be some anti-alias filtering to ensure that there are only frequency components in zone 0, i.e., 0 to $f_s/2$. The N-th Nyquist zone is defined as:

$$n\frac{f_s}{2} \rightarrow (n+1)\frac{f_s}{2} \tag{8.2}$$

8.2 Analysing ADC Outputs in the Frequency Domain

Fast Fourier Transform (FFT) is used to compute the Discrete Fourier Transform (DFT) of a signal, converting from time domain to the frequency domain. FFT process samples from the ADC in batches of N samples. Batches could have no overlap, where batch 0 uses sample $0 \rightarrow N-1$ and batch 1 $N \rightarrow 2N-1$. Alternatively there could be an overlap of used samples to improve frequency resolution or reduce artefacts. A 50% overlap would be batch 0 using $0 \rightarrow N-1$, batch 1 using $N/2 \rightarrow N/2+N-1$, and batch 2 using $2N \rightarrow 2N-1$. The FFT will split the signal into discrete frequency components called bins, each bins value is defined in 8.3.

$$X[k] = \sum_{n=0}^{N-1} x[n] \cdot e^{-i2\pi kn/N}. \tag{8.3}$$

The amplitude is the magnitude of $X[k]$, i.e., $|X[k]|$. The frequency is decrease into bins, meaning the frequency is represented by the bin k. The phase is defined as:

$$\theta[k] = \text{atan2}(\text{Im}(X[k]), \text{Re}(X[k])).$$

Arctan2 will result in a phase between $\pm\pi$. The phase represents the offset from the first samples, meaning in what position is the sinusoidal signal at the first sample.

We could use Eulers formula to derive a formula for imaginary and real part.

$$\begin{aligned}
e^{-i\theta} &= \cos\theta - i\sin\theta \\
e^{-i2\pi kn/N} &= \cos(2\pi kn/N) - i\sin(2\pi kn/N) \\
X[k] &= \sum_{n=0}^{N-1} x[k](\cos(2\pi kn/N) - i\sin(2\pi kn/N)) \\
X[k] &= \sum_{n=0}^{N-1} x[k]\cos(2\pi kn/N) - i\sum_{n=0}^{N-1} x[k]\sin(2\pi kn/N)) \\
\Rightarrow \text{Re}(X[k]) &= \sum_{n=0}^{N-1} X[n] \cdot \cos(2\pi kn/N) \\
\Rightarrow \text{Im}(X[k]) &= \sum_{n=0}^{N-1} X[n] \cdot \sin(2\pi kn/N)
\end{aligned}$$

8.2.1 Channeliser

As the name suggests a channeliser splits a signal into multiple channels to process it separately. Typically, a channeliser uses a FFT to separate the signal components into multiple channels. It is also possible to use digital filters, e.g., polyphase filter banks, to separate the frequency component.

8.3 ADC Specifications

Resolution (bits) Number of bits represents the analog value, e.g., 8-bit, 12-bit, 16-bit.

Sampling Rate (SPS) How many samples the ADC can take per second, e.g., 1 MSPS, 100 kSPS.

Input Range Voltage range the ADC can digitize, e.g., 0–5 V, ±10 V.

Integral Non-Linearity (INL) Deviation of the actual transfer function from an ideal line.

Differential Non-Linearity (DNL) Variation in step size between adjacent codes.

Signal-to-Noise Ratio (SNR) Ratio of signal power to noise power, often expressed in dB.

Effective Number of Bits (ENOB) Actual resolution considering noise and distortion.

Spurious-Free Dynamic Range (SFDR) Ratio of the signal to the largest spurious component.

8.4 ADC types

8.4.1 Successive Approximation (SAR) ADC

Usually has a bit rate of 8-16 bits, with moderate speed of 10 kSPS to 5 MSPS.

8.4.2 Delta-Sigma ($\Delta\Sigma$) ADC

With a bit rate of 16-24 bits makes it ideal for high-precision application. However, its slow sampling rate of 1 SPS to 100 kSPS, it can only be for low speed aplication.

8.4.3 Flash ADC

Flash ADC are very fast with sampling rate ussaly above 100 MSPS. However, it has a low resulution of 4-8 bits.

8.4.4 Pipelined ADC

With speeds between 10 MSPS and 100 MSPS, and moderate to high resolution of 8-16 bits, it excel in application such as Automotive Radar [1][2], LIDAR [3][4], SDR [5][6][7], spectrum analyzers [8][9], oscilloscopes [10][11].

8.5 ADC Noise and Error Sources

Quantization Noise Error introduced by discretizing a continuous signal.

Thermal Noise Random noise due to thermal agitation in components.

Aperture Jitter Timing uncertainty in the sampling instant, critical for high-frequency signals.

Gain and Offset Errors Deviations in the ADC's transfer function.

Clock Jitter Uncertainty in the sampling clock, affecting high-speed ADCs.

8.5.1 DC Bin

With converting the sampled signal to the frequency domain, there will be a DC component present in the signal. The signal is typically not centred around 0 volts when sampling. The offset will result in a 0 Hz competent, i.e., a DC component. Therefore, a signal will be shown in the first bin or at 0 Hz. The first bin is derived from equation 8.3 and is defined in equation 8.4.

$$X[0] = \sum_{n=0}^{N-1} x[n] \tag{8.4}$$

8.6 ADC Interfacing

Reference Voltage Denoted as V_{REF}, sets the full-scale input range of the ADC.

Input Impedance Must match the source impedance to avoid signal distortion.

Driving the ADC Use op-amps or buffers to ensure the input signal is stable during conversion.

Multiplexing Using a single ADC to sample multiple channels via a multiplexer.

8.7 Sampling

8.7.1 Real-Time Sampling

For real-time control and monitoring.

8.7.2 IQ Sampling (In-Phase and Quadrature Sampling)

Real-time sampling of a signal captures only its amplitude and frequency, but loses phase information. This limitation makes it impossible to use techniques like phase interferometry, which are essential in modern wireless communication systems such as 5G and WiFi.

In contrast, IQ sampling provides both amplitude and phase information. This is achieved by mixing the input signal with two local oscillator (LO) signals that are 90° out of phase, enabling the reconstruction of the original signal's complex envelope.

Using the trigonometric identity $\cos(A)\cos(B) = 1/2[\cos(A+B) + \cos(A-B)]$ the output signal from mixing with LO_1 will be:

$$s_{input}(t) \cdot s_{\mathrm{LO}_1}(t) = \frac{A}{2}\left[\cos\left(2\pi f_{RF}t + 2\pi f_{\mathrm{LO}}t\right) + \cos\left(2\pi f_{RF}t - 2\pi f_{\mathrm{LO}}t\right)\right]. \tag{8.5}$$

The high frequency component $\cos(2\pi f_{RF}t + 2\pi f_{\mathrm{LO}}t)$ usually is filtered out using a low pass filter. Similarly, with the Q-channel the mixing with LO_1 will result in:

$$s_{input}(t) \cdot s_{\mathrm{LO}_2}(t) = \frac{A}{2}\left[\cos\left(2\pi f_{RF}t + 2\pi f_{\mathrm{LO}}t - \frac{\pi}{2}\right) + \cos\left(2\pi f_{RF}t - \left(2\pi f_{\mathrm{LO}}t - \frac{\pi}{2}\right)\right)\right]. \tag{8.6}$$

Note that $\sin(\theta) = \cos(\theta - \pi/2)$. Thus, the resulting two signals will be:

$$s_I(t) = \frac{A}{2}\cos(2\pi(f_{RF} - f_{\mathrm{LO}})t), \tag{8.7}$$

$$s_Q(t) = \frac{A}{2}\cos\left(2\pi\left(f_{RF} - f_{\mathrm{LO}}\right)t + \frac{\pi}{2}\right). \tag{8.8}$$

The amplitude is then calculated:

$$\text{Amplitude} = \sqrt{I^2 + Q^2}. \tag{8.9}$$

And the phase:

$$\text{Phase} = \arctan\left(\frac{Q}{I}\right). \tag{8.10}$$

8.7.3 Nyquist Sampling

8.7.4 Oversampling

For high-fidelity and precision measurements.

8.7.5 Undersampling (Bandpass Sampling)

For radar.

8.7.6 Random sampling (Non-Uniform Sampling)

For sensors?

8.7.7 Compressed Sampling (Compressive Sampling)

8.7.8 Event-Based Sampling

8.7.9 Block Sampling

8.7.10 Synchronous vs. Asynchronous Sampling

8.8 Advanced Techniques

Dithering Adding noise to improve linearity and reduce distortion in high-resolution ADCs.

Decimation Reducing the sampling rate after oversampling to improve resolution.

Interleaving Using multiple ADCs in parallel to increase effective sampling rate.

Calibration Compensating for ADC errors (gain, offset, INL/DNL) in software or hardware.

Bibliography

[1] Analog Devices, Inc., *Ad9081: Mxfe quad, 16-bit, 12 gsps rf dac and quad, 12-bit, 4 gsps rf adc datasheet*, https://www.analog.com/media/en/technical-documentation/data-sheets/ad9081.pdf, Revision 0, Apr. 2021.

[2] Texas Instruments, *Adc12dj3200: 6.4-gsps single-channel or 3.2-gsps dual-channel, 12-bit, rf-sampling analog-to-digital converter datasheet*, https://www.ti.com/lit/ds/symlink/adc12dj3200.pdf, Rev. SLVSD97, Jun. 2017.

[3] Analog Devices, Inc., *Ad9208: Dual, 14-bit, 3 gsps, jesd204b, analog-to-digital converter datasheet*, https://www.analog.com/media/en/technical-documentation/data-sheets/AD9208.pdf, Rev. 0, 2021.

[4] Texas Instruments, *Adc08d1520: Low power, 8-bit, dual 1.5 gsps or single 3.0 gsps a/d converter datasheet*, https://www.ti.com/lit/ds/symlink/adc08d1520.pdf, Rev. A, 2017.

[5] Analog Devices, Inc., *Ad9361: Rf agile transceiver data sheet*, https://www.analog.com/media/en/technical-documentation/data-sheets/ad9361.pdf, Rev. G, 2021.

[6] ——, *Ltc2175-14: 14-bit, 125msps/105msps/80msps low power quad adcs data sheet*, https://www.analog.com/media/en/technical-documentation/data-sheets/21754312fa.pdf, Rev. 07/07/2011, 2011.

[7] Texas Instruments, *Adc32rf45: Dual-channel, 14-bit, 3.0-gsps, rf-sampling analog-to-digital converter datasheet*, https://www.ti.com/lit/ds/symlink/adc32rf45.pdf, Rev. C, 2016.

[8] Analog Devices, Inc., *Ad9680: Dual, 14-bit, 1.25 gsps/1 gsps/820 msps/500 msps, jesd204b, analog-to-digital converter datasheet*, https://www.analog.com/media/en/technical-documentation/data-sheets/ad9680.pdf, Rev. E, 2021.

[9] Keysight Technologies, *M9703a: Axie high-speed digitizer/wideband digital receiver datasheet*, https://www.keysight.com/us/en/assets/7018-03048/data-sheets/5990-8507.pdf, Rev. 0, 2014.

[10] Analog Devices, Inc., *Ad9625: 12-bit, 2.6 gsps/2.5 gsps/2.0 gsps, 1.3 v/2.5 v analog-to-digital converter datasheet*, https://www.analog.com/media/en/technical-documentation/data-sheets/ad9625.pdf, Rev. E, 2021.

[11] Tektronix, Inc., *Dpo70000sx: Scalable performance oscilloscopes datasheet*, https://download.tek.com/datasheet/DPO70000SX-Datasheet-EN-US-55W-30662-25.pdf, Rev. 25, 2023.