Power

File: Power.kicad_sch

Control

File: Control.kicad_sch

Read_In

File: Read_In.kicad_sch

I = Internal
E = External

Sheet: /
File: Electronic load.kicad_sch

Title:

Size: A4	Date:	**Rev:**
KiCad E.D.A. kicad (6.0.8)		Id: 1/4

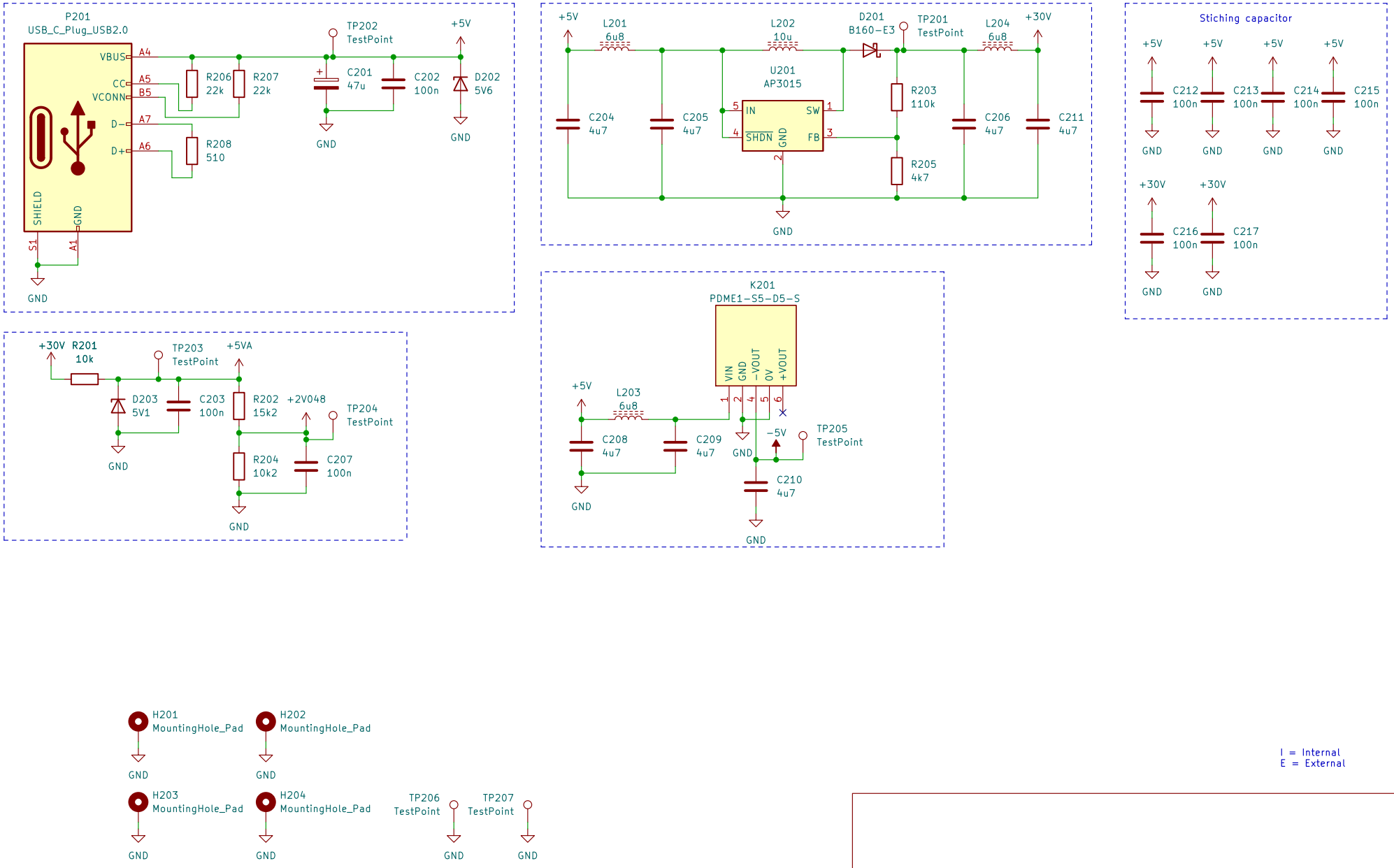

I = Internal
E = External

Sheet: /Power/
File: Power.kicad_sch

Title:

Size: A4	Date:	**Rev:**
KiCad E.D.A. kicad (6.0.8)		Id: 2/4

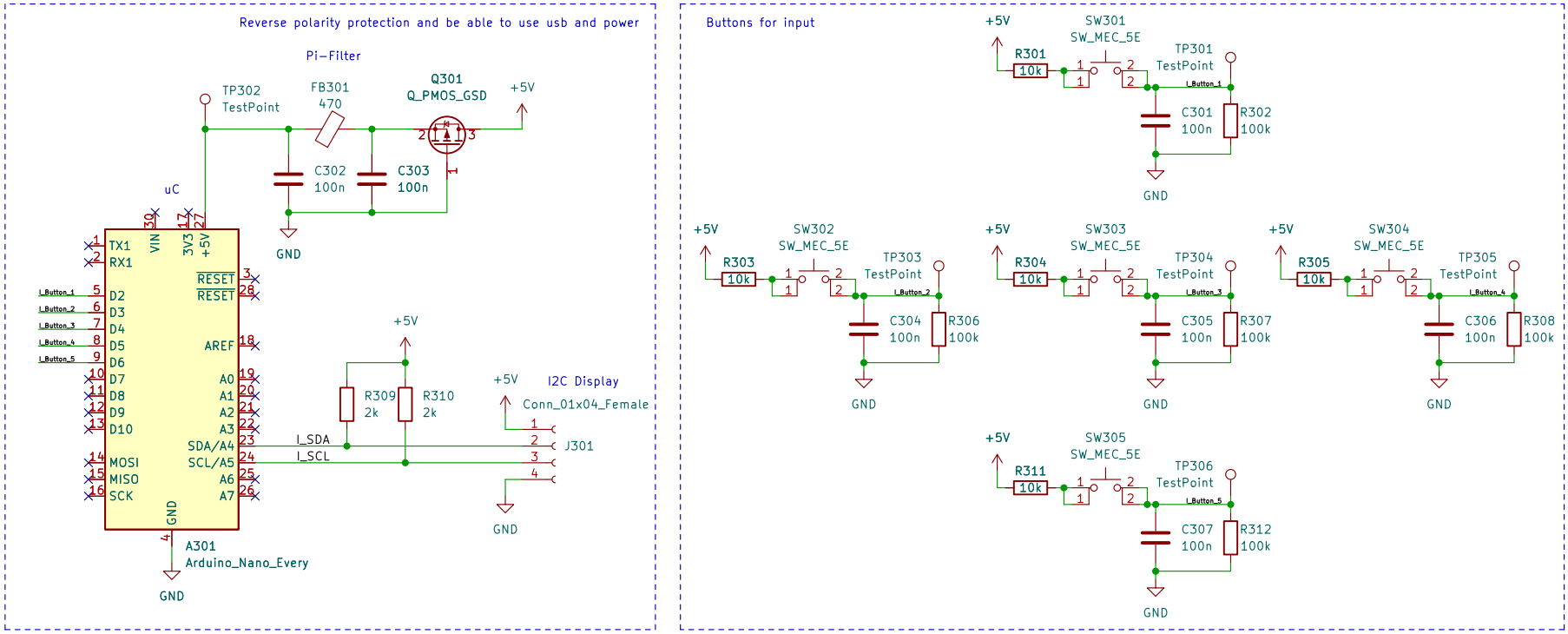

I = Internal
E = External

Sheet: /Control/
File: Control.kicad_sch

Title:

Size: A4	Date:	Rev:
KiCad E.D.A. kicad (6.0.8)		Id: 3/4

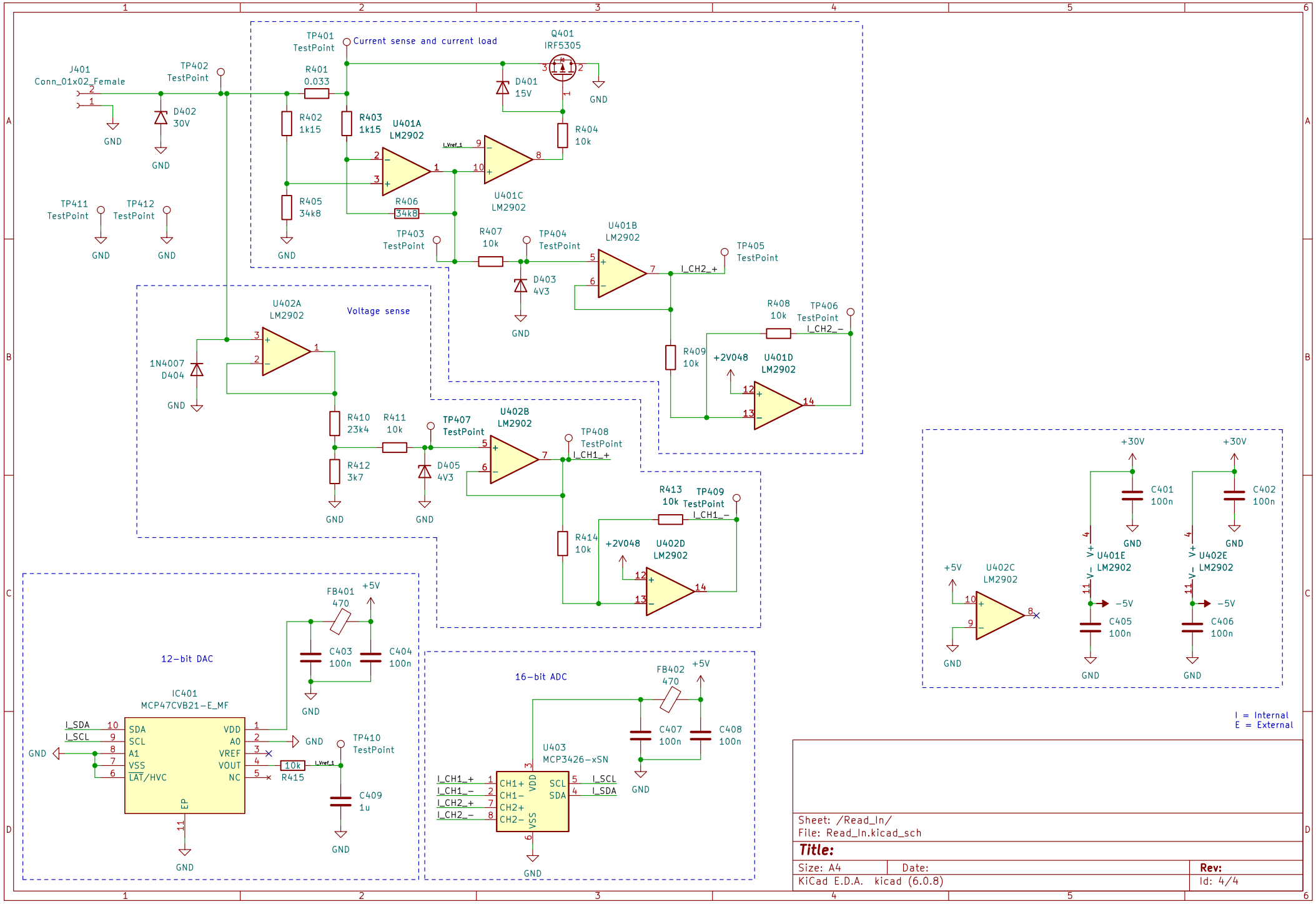
Current sense and current load
Voltage sense
12-bit DAC
16-bit ADC
J401
Conn_01x02_Female
TP402
TestPoint
TP401
TestPoint
Q401
IRF5305
R401
0.033
D401
15V
R402
1k15
R403
1k15
U401A
LM2902
R404
10k
U401C
LM2902
R405
34k8
R406
34k8
TP411
TestPoint
TP412
TestPoint
TP403
TestPoint
R407
10k
TP404
TestPoint
U401B
LM2902
TP405
TestPoint
I_CH2_+
D403
4V3
R408
10k
TP406
TestPoint
I_CH2_−
R409
10k
+2V048
U401D
LM2902
U402A
LM2902
1N4007
D404
R410
23k4
R411
10k
TP407
TestPoint
U402B
LM2902
TP408
TestPoint
I_CH1_+
R412
3k7
D405
4V3
R413
10k
TP409
TestPoint
I_CH1_−
R414
10k
+2V048
U402D
LM2902
FB401
470
+5V
C403
100n
C404
100n
IC401
MCP47CVB21-E_MF
I_SDA
I_SCL
SDA
SCL
A1
VSS
LAT/HVC
VDD
A0
VREF
VOUT
NC
EP
10k
R415
I_Vref_1
TP410
TestPoint
C409
1u
FB402
470
C407
100n
C408
100n
U403
MCP3426-xSN
I_CH1_+
I_CH1_−
I_CH2_+
I_CH2_−
CH1+
CH1−
CH2+
CH2−
VDD
VSS
SCL
SDA
+30V
C401
100n
C402
100n
U402C
LM2902
U401E
LM2902
U402E
LM2902
−5V
C405
100n
C406
100n
GND
I = Internal
E = External
Sheet: /Read_In/
File: Read_In.kicad_sch
Title:
Size: A4
Date:
Rev:
KiCad E.D.A. kicad (6.0.8)
Id: 4/4