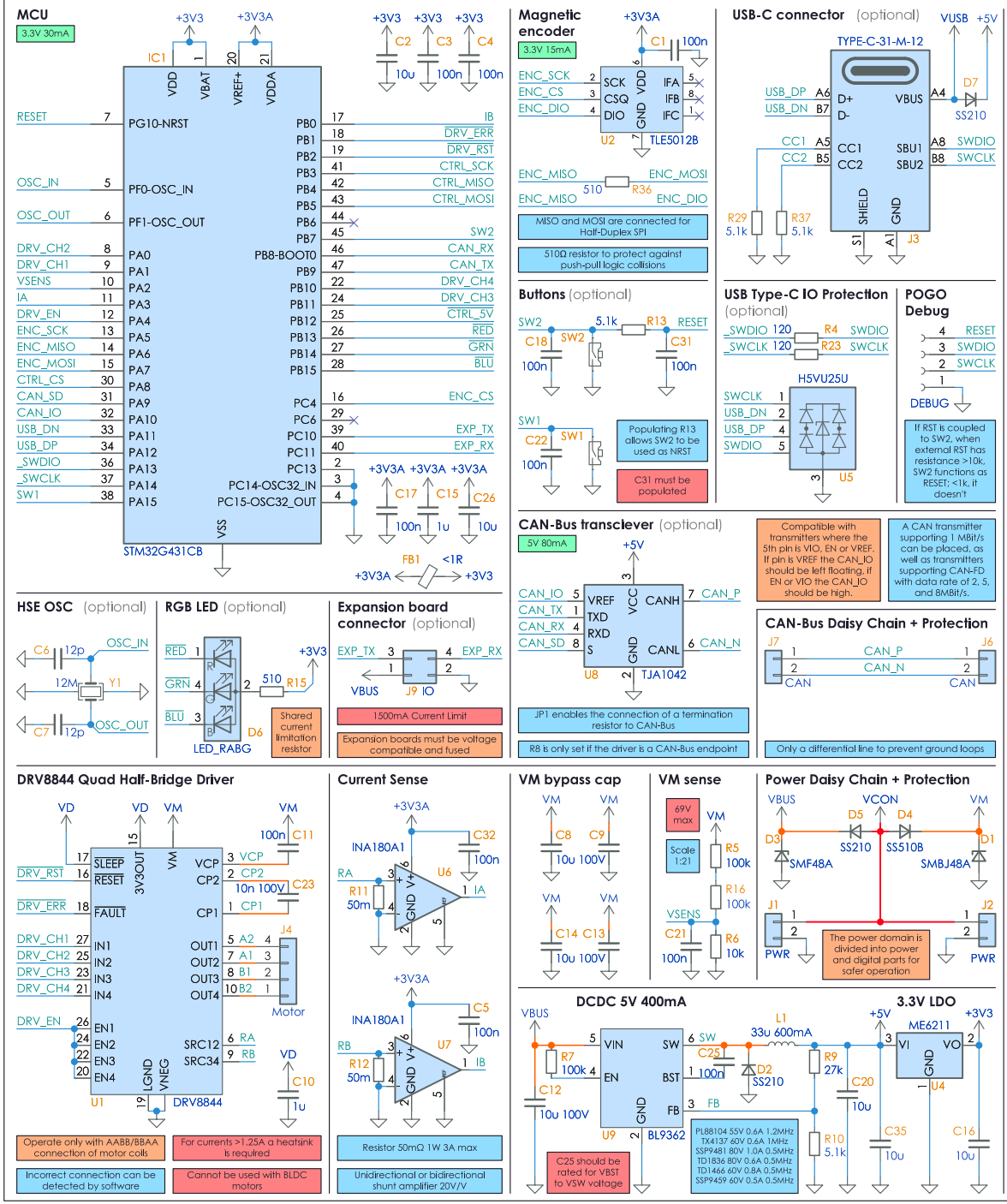

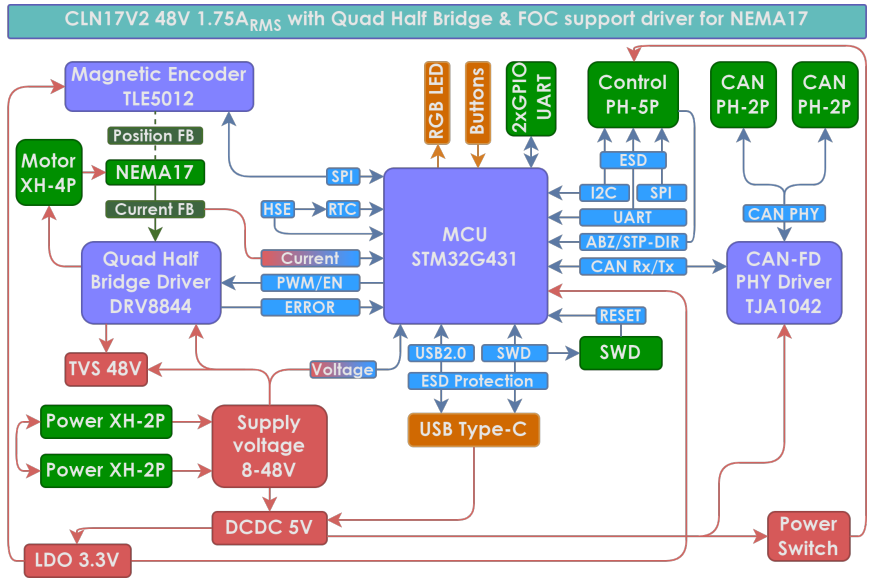

Design Keynotes

Design separated to power and logic sections.
The power section consists of the driver, necessary circuitry, reverse polarity protection, overcurrent protection, and overvoltage protection.

All components have a minimum of 20% voltages margin allowing them to withstand temporary voltage spikes up to 60V without any damage.

The analogue power supply has single connection point, with a 10uF bypass capacitor for power stabilization and a 100nF bypass near each consumer.

CAN-Bus and POWER connectors are interconnected, forming a Daisy Chain topology for simplified connection of multiple drivers.
Each POWER connector has a 2.5A current limit for safe operation.

All interfaces are protected against electrostatic discharge, overvoltage, and reverse polarity.
CTRL additionally has protection against over currents at rated voltage.
CAN-Bus and CTRL interfaces are compatible with 3.3V and 5V logic levels.

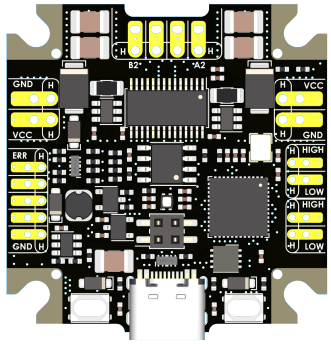

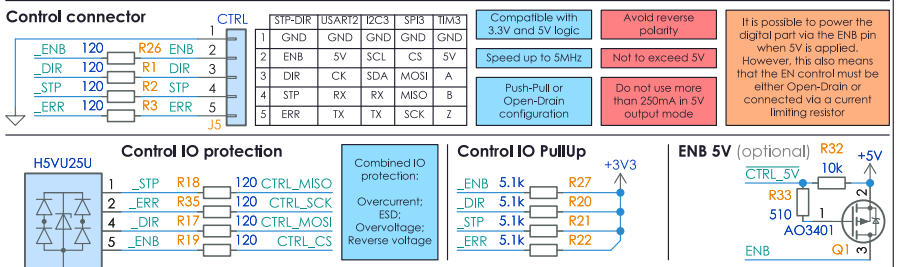

	STP-DIR	USART2	I2C-3	SPI3	TIM3
1	GND	GND	GND	GND	GND
2	ENB	5V	SCL	CS	5V
3	DIR	CK	SDA	MOSI	A
4	STP	RX	RX	MISO	B
5	ERR	TX	TX	SCK	Z

More information on https://creapunk.com/cln17

Designed by Anton Khrustalev

Released under the Creative Commons Attribution-NonCommercial-ShareAlike 4.0 International (CC BY-NC-SA 4.0)
https://creativecommons.org/licenses/by-nc-sa/4.0/

CLN17 project

Title: CLN17 V2 Closed-Loop Stepper Motor Driver

Rev: 1.1

Sheet: Root | Sheet #: 1/1 | Date: 2024-03