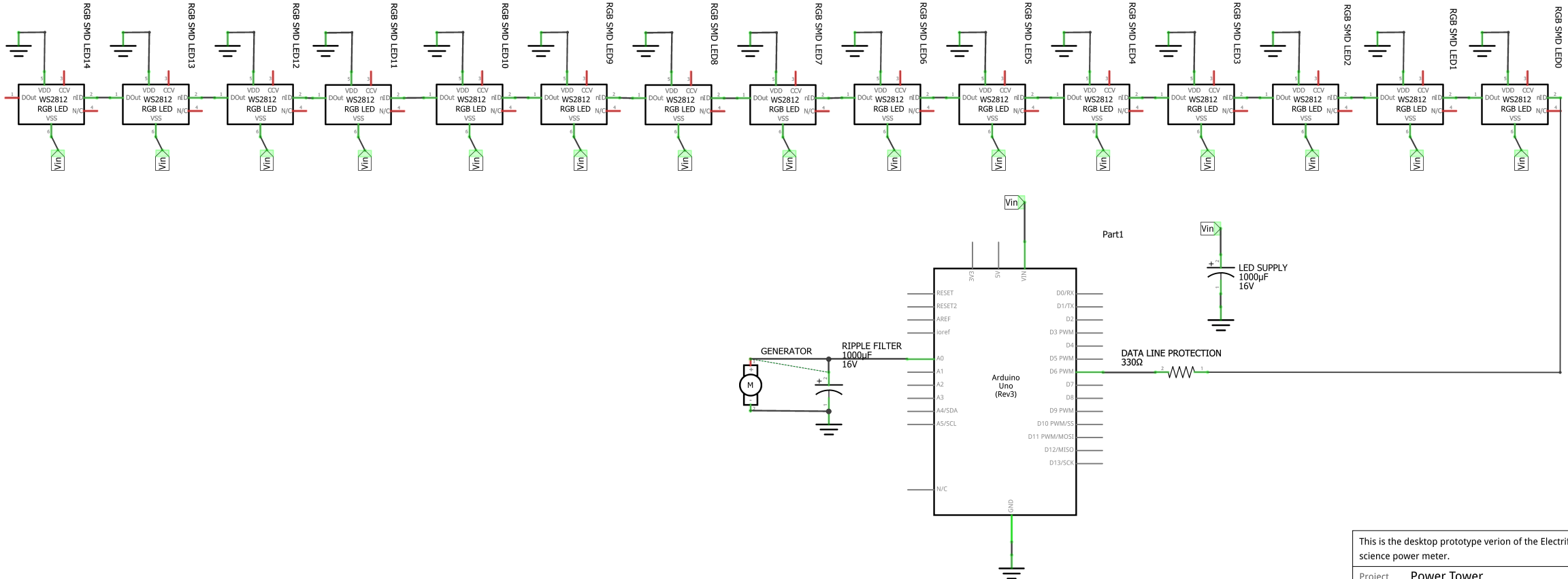

This is the desktop prototype verion of the Electrifying science power meter.

Project	Power Tower		
Filename	PowertowerALPHA.fzz	Rev	0.1
Date	11 May 2020 15:43:17	Sheet	1/1

fritzing