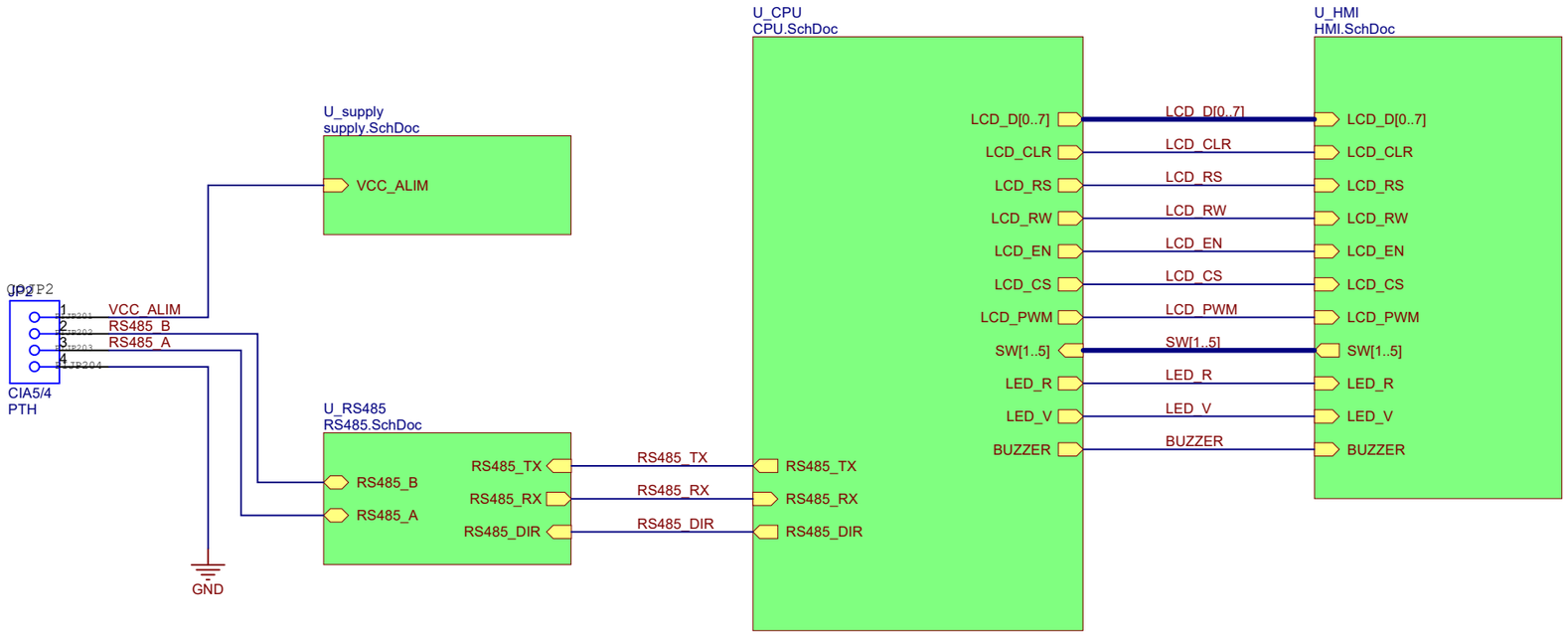
U_CPU
CPU.SchDoc
U_HMI
HMI.SchDoc
U_supply
supply.SchDoc
VCC_ALIM
JP2
CIA5/4
PTH
VCC_ALIM
RS485_B
RS485_A
GND
U_RS485
RS485.SchDoc
RS485_B
RS485_A
RS485_TX
RS485_RX
RS485_DIR
LCD_D[0..7]
LCD_CLR
LCD_RS
LCD_RW
LCD_EN
LCD_CS
LCD_PWM
SW[1..5]
LED_R
LED_V
BUZZER

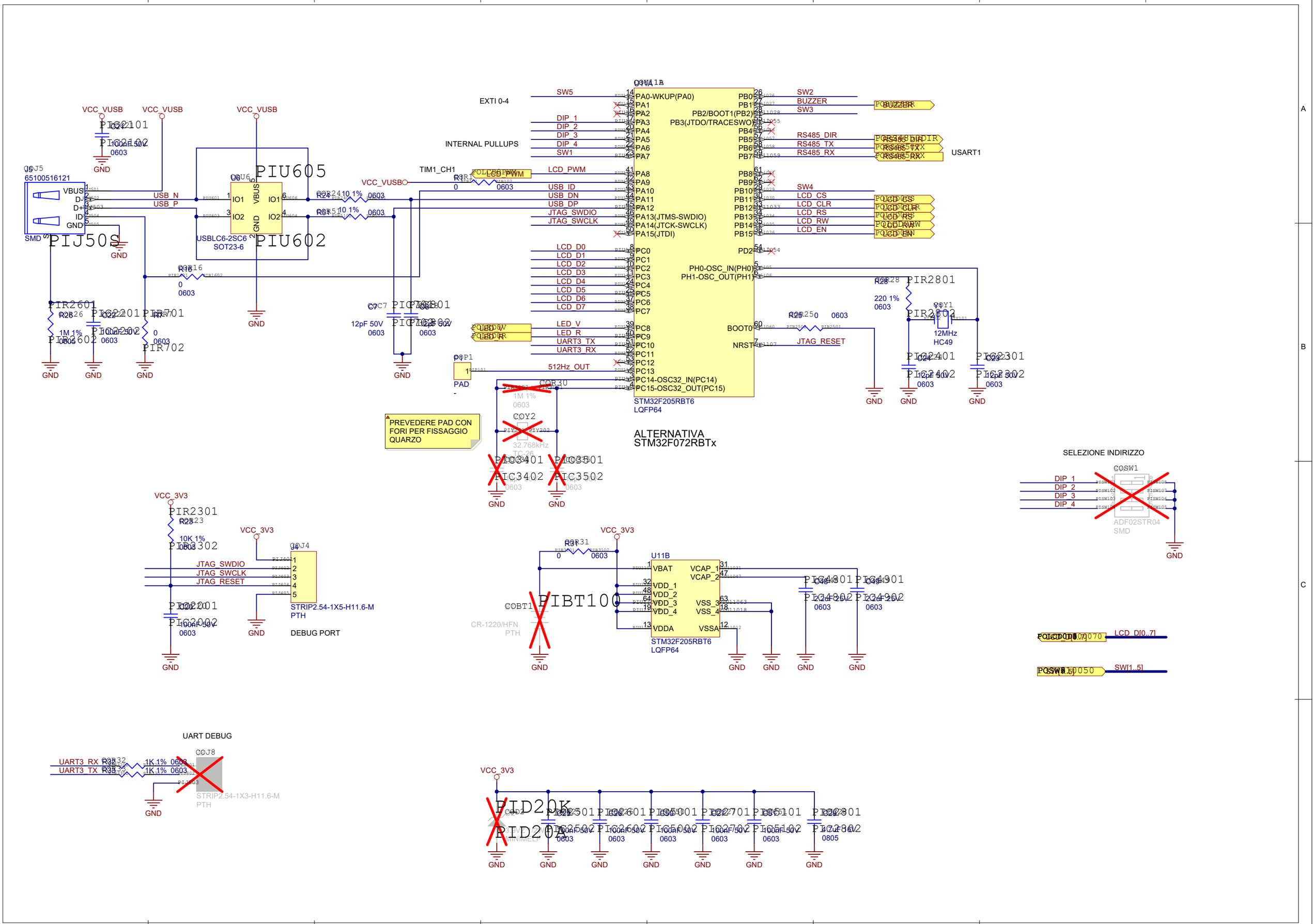
VCC_VUSB
GND
PIJ50S
USB_N
USB_P
USBLC6-2SC6
SOT23-6
PIU605
PIU602
EXTI 0-4
INTERNAL PULLUPS
TIM1_CH1
LCD_PWM
USB_ID
USB_DN
USB_DP
JTAG_SWDIO
JTAG_SWCLK
LCD_D0
LCD_D1
LCD_D2
LCD_D3
LCD_D4
LCD_D5
LCD_D6
LCD_D7
LED_V
LED_R
UART3_TX
UART3_RX
512Hz_OUT
SW5
DIP_1
DIP_2
DIP_3
DIP_4
SW1
SW2
BUZZER
SW3
RS485_DIR
RS485_TX
RS485_RX
USART1
SW4
LCD_CS
LCD_CLR
LCD_RS
LCD_RW
LCD_EN
JTAG_RESET
PA0-WKUP(PA0)
PB2/BOOT1(PB2)
PB3(JTDO/TRACESWO)
PA13(JTMS-SWDIO)
PA14(JTCK-SWCLK)
PA15(JTDI)
PH0-OSC_IN(PH0)
PH1-OSC_OUT(PH1)
BOOT0
NRST
PC14-OSC32_IN(PC14)
PC15-OSC32_OUT(PC15)
STM32F205RBT6
LQFP64
ALTERNATIVA
STM32F072RBTx
PREVEDERE PAD CON FORI PER FISSAGGIO QUARZO
12MHz
HC49
32.768kHz
SELEZIONE INDIRIZZO
ADF02STR04
SMD
VCC_3V3
JTAG_SWDIO
JTAG_SWCLK
JTAG_RESET
STRIP2.54-1X5-H11.6-M
PTH
DEBUG PORT
PIBT100
CR-1220/HFN
PTH
VBAT
VDD_1
VDD_2
VDD_3
VDD_4
VDDA
VCAP_1
VCAP_2
VSS_3
VSS_4
VSSA
LCD_D[0..7]
SW[1..5]
UART DEBUG
UART3_RX
UART3_TX
STRIP2.54-1X3-H11.6-M
PID20K
PID20A
MINIMELF

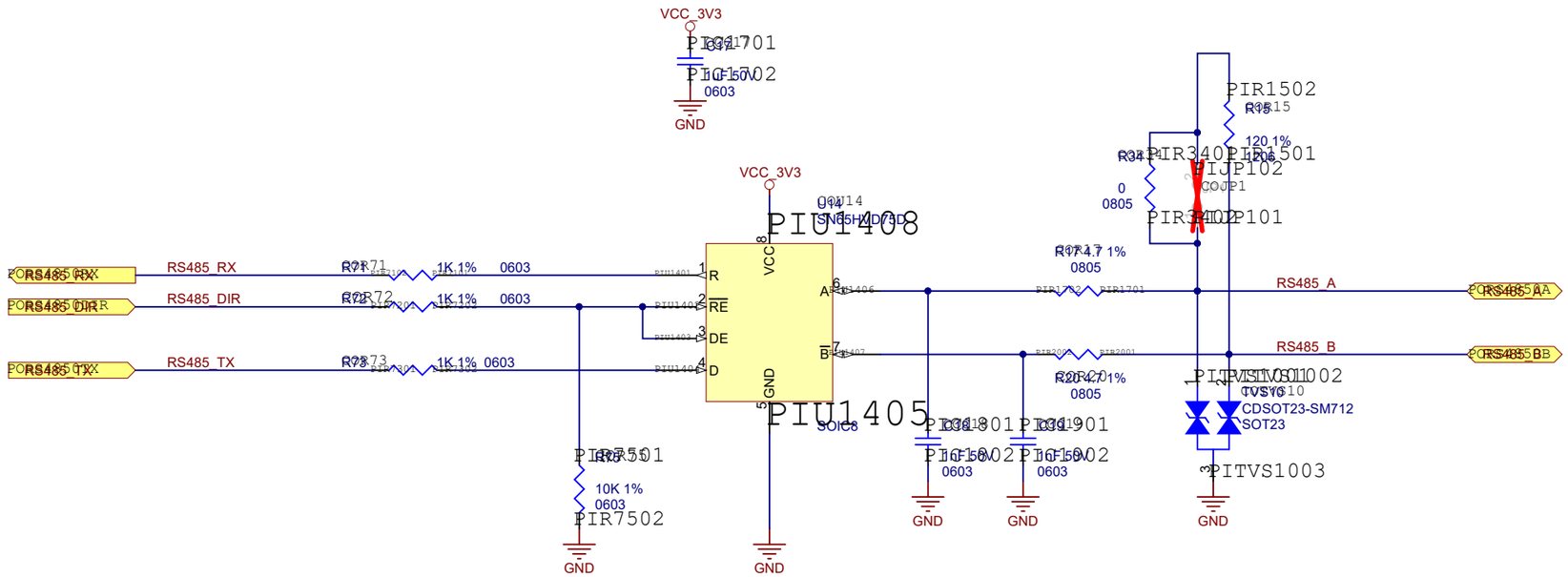
VCC_3V3
PIC1701
PIC1702
GND
PIR1502
120.1%
PIR3402
PIR1501
PIJP102
PIJP101
0
0805
VCC_3V3
PIU1408
PIU1405
SOIC8
R
RE
DE
D
VCC
GND
A
B
RS485_RX
RS485_DIR
RS485_TX
1K 1% 0603
RS485_A
RS485_B
0805
PITVS1001
PITVS1002
PITVS1003
CDSOT23-SM712
SOT23
10K 1%
0603
PIR7502
GND

NO	COLOR	FORWARD VOLTAGE (V)			FORWARD CURRENT (mA)			MIN BRIGHTNESS (cd/m2) *
		Min	Typ.	Max	Min	Typ.	Max	
1.	Yellow Green	-	4.2	-	-	30	45	45
2.	White	-	6.5	-	-	45	60	85
3.	Blue	-	6.5	-	-	45	60	70

PARAMETER	SYMBOL	MIN	TYP	MAX	UNIT	TEST CONDITION
Supply Current	ILED	–	64	80	mA	V=3.5V
Supply Voltage	V	3.4	3.5	3.6	V	

MONTAGGIO ALTERNATIVO

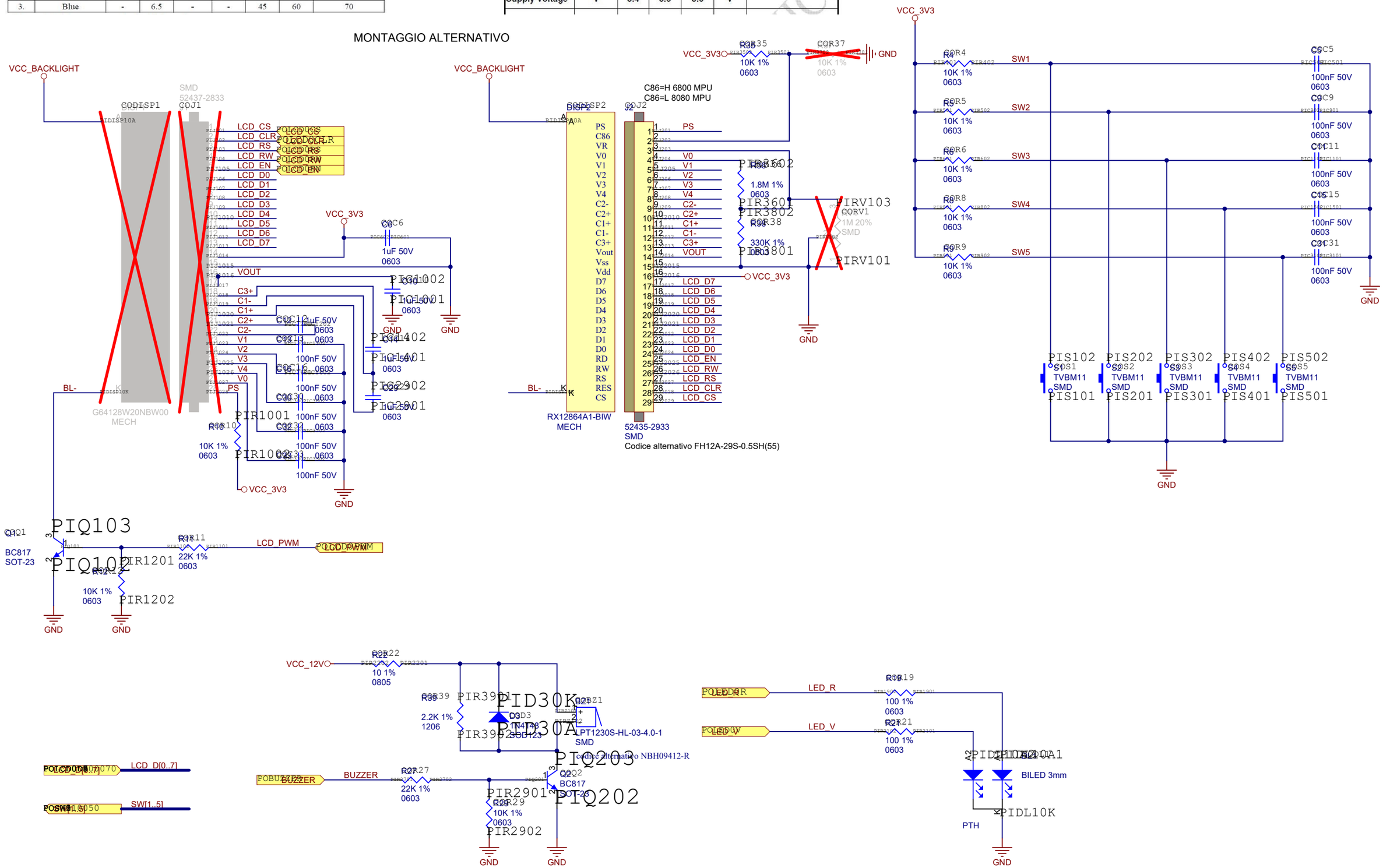

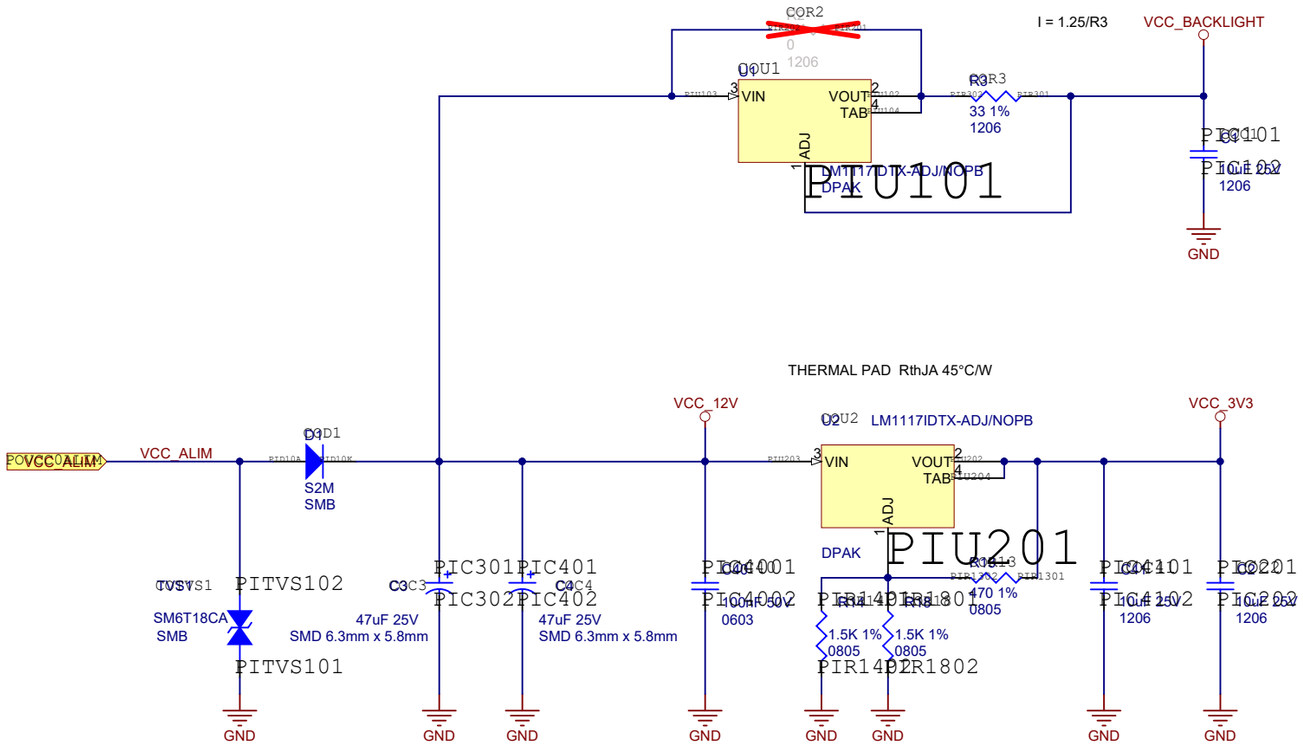
COR2
0
1206
COU1
LM1117DTX-ADJ/NOPB
DPAK
VIN
VOUT
TAB
ADJ
PIU101
I = 1.25/R3
VCC_BACKLIGHT
COR3
R3
33 1%
1206
PIC101
10uF 25V
1206
GND
THERMAL PAD RthJA 45°C/W
VCC_12V
VCC_3V3
COU2
LM1117IDTX-ADJ/NOPB
PIU201
VCC_ALIM
COD1
S2M
SMB
COTVS1
PITVS102
SM6T18CA
SMB
PITVS101
PIC301
PIC302
PIC401
PIC402
47uF 25V
SMD 6.3mm x 5.8mm
PIC4001
PIC4002
100nF 50V
0603
PIR1401
PIR1402
1.5K 1%
0805
PIR1301
PIR1302
470 1%
0805
PIC4101
PIC4102
PIC201
PIC202
10uF 25V
1206