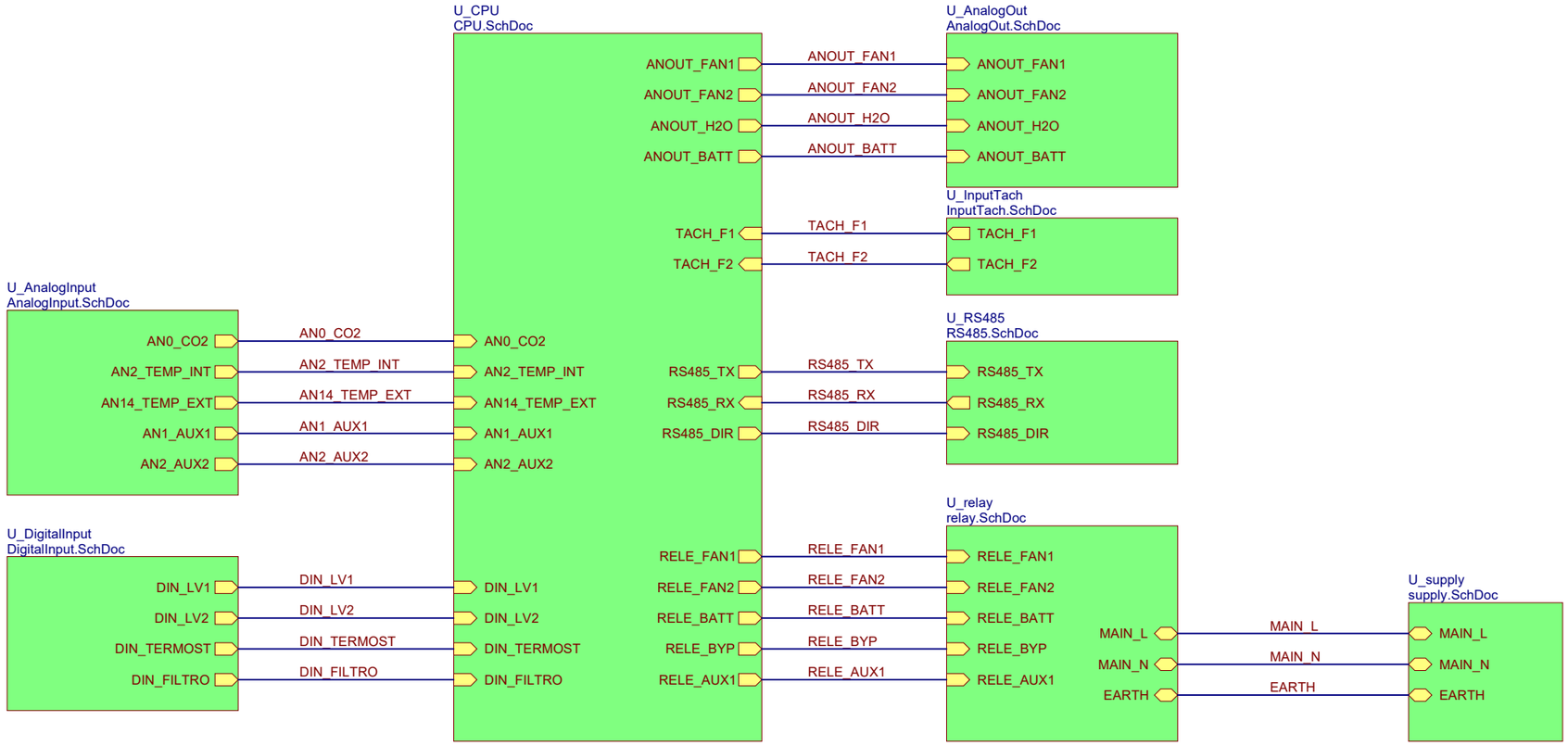
U_CPU
CPU.SchDoc
U_AnalogOut
AnalogOut.SchDoc
ANOUT_FAN1
ANOUT_FAN2
ANOUT_H2O
ANOUT_BATT
U_InputTach
InputTach.SchDoc
TACH_F1
TACH_F2
U_AnalogInput
AnalogInput.SchDoc
AN0_CO2
AN2_TEMP_INT
AN14_TEMP_EXT
AN1_AUX1
AN2_AUX2
U_RS485
RS485.SchDoc
RS485_TX
RS485_RX
RS485_DIR
U_DigitalInput
DigitalInput.SchDoc
DIN_LV1
DIN_LV2
DIN_TERMOST
DIN_FILTRO
U_relay
relay.SchDoc
RELE_FAN1
RELE_FAN2
RELE_BATT
RELE_BYP
RELE_AUX1
MAIN_L
MAIN_N
EARTH
U_supply
supply.SchDoc

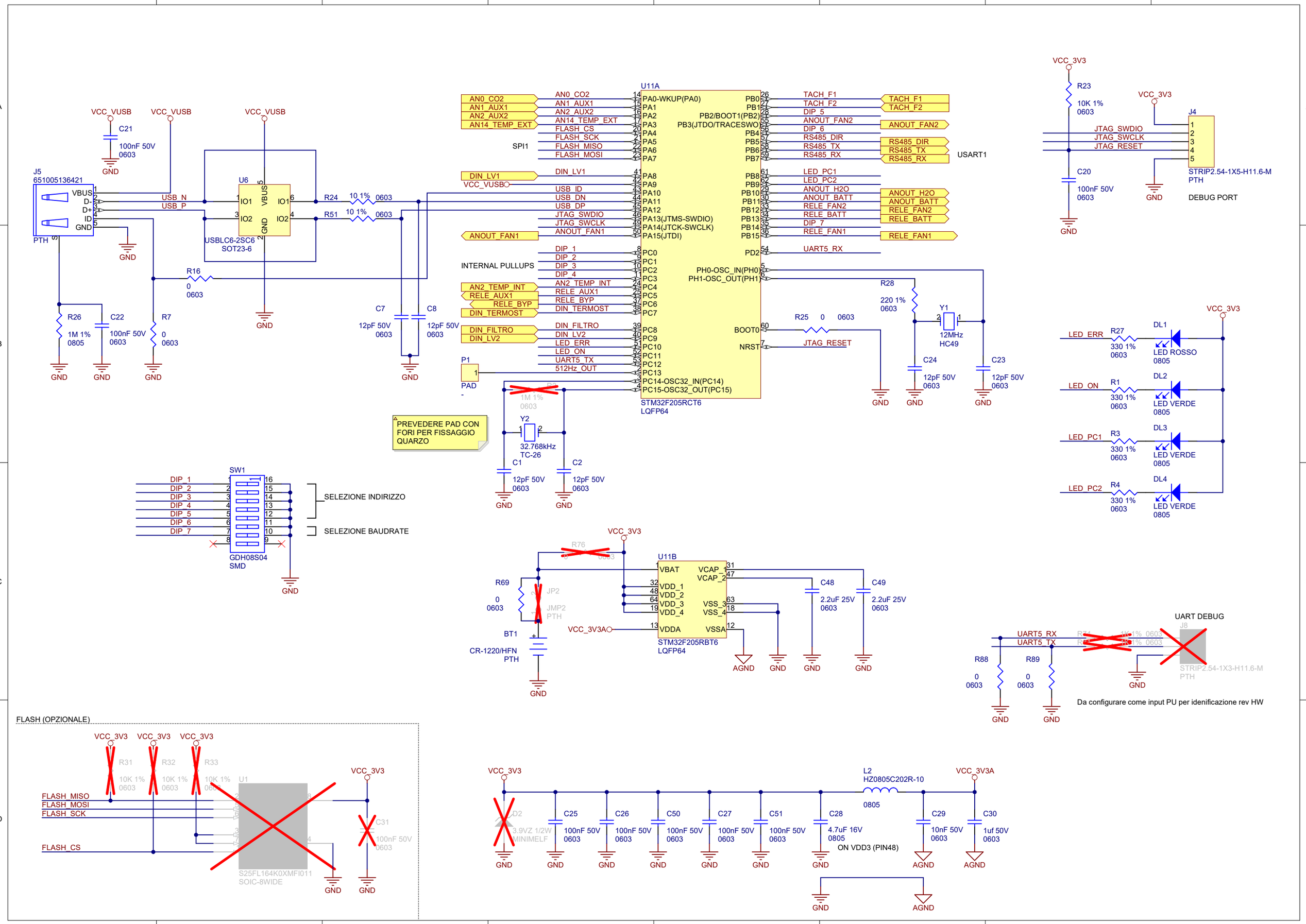
U11A
STM32F205RCT6
LQFP64
PA0-WKUP(PA0)
PA1
PA2
PA3
PA4
PA5
PA6
PA7
PA8
PA9
PA10
PA11
PA12
PA13(JTMS-SWDIO)
PA14(JTCK-SWCLK)
PA15(JTDI)
PC0
PC1
PC2
PC3
PC4
PC5
PC6
PC7
PC8
PC9
PC10
PC11
PC12
PC13
PC14-OSC32_IN(PC14)
PC15-OSC32_OUT(PC15)
PB0
PB1
PB2/BOOT1(PB2)
PB3(JTDO/TRACESWO)
PB4
PB5
PB6
PB7
PB8
PB9
PB10
PB11
PB12
PB13
PB14
PB15
PD2
PH0-OSC_IN(PH0)
PH1-OSC_OUT(PH1)
BOOT0
NRST
AN0_CO2
AN1_AUX1
AN2_AUX2
AN14_TEMP_EXT
FLASH_CS
FLASH_SCK
FLASH_MISO
FLASH_MOSI
SPI1
DIN_LV1
USB_ID
USB_DN
USB_DP
JTAG_SWDIO
JTAG_SWCLK
ANOUT_FAN1
DIP_1
DIP_2
DIP_3
DIP_4
INTERNAL PULLUPS
AN2_TEMP_INT
RELE_AUX1
RELE_BYP
DIN_TERMOST
DIN_FILTRO
DIN_LV2
LED_ERR
LED_ON
UART5_TX
512Hz_OUT
TACH_F1
TACH_F2
DIP_5
ANOUT_FAN2
DIP_6
RS485_DIR
RS485_TX
RS485_RX
USART1
LED_PC1
LED_PC2
ANOUT_H2O
ANOUT_BATT
RELE_FAN2
RELE_BATT
DIP_7
RELE_FAN1
UART5_RX
JTAG_RESET
VCC_VUSB
VCC_3V3
J5
651005136421
PTH
VBUS
D-
D+
ID
GND
USB_N
USB_P
U6
USBLC6-2SC6
SOT23-6
IO1
IO2
R24
10 1%
0603
R51
R16
0
R26
1M 1%
0805
C22
100nF 50V
C21
R7
C7
12pF 50V
C8
P1
PAD
Y2
32.768kHz
TC-26
C1
C2
PREVEDERE PAD CON FORI PER FISSAGGIO QUARZO
R23
10K 1%
C20
J4
STRIP2.54-1X5-H11.6-M
DEBUG PORT
R28
220 1%
Y1
12MHz
HC49
C24
C23
R25
LED_ERR
LED_ON
LED_PC1
LED_PC2
R27
R1
R3
R4
330 1%
DL1
DL2
DL3
DL4
LED ROSSO
LED VERDE
SW1
GDH08S04
SMD
SELEZIONE INDIRIZZO
SELEZIONE BAUDRATE
U11B
STM32F205RBT6
LQFP64
VBAT
VCAP_1
VCAP_2
VDD_1
VDD_2
VDD_3
VDD_4
VSS_3
VSS_4
VDDA
VSSA
VCC_3V3A
R76
R69
JP2
JMP2
BT1
CR-1220/HFN
C48
C49
2.2uF 25V
AGND
UART DEBUG
J8
STRIP2.54-1X3-H11.6-M
R88
R89
Da configurare come input PU per idenificazione rev HW
FLASH (OPZIONALE)
R31
R32
R33
10K 1%
U1
S25FL164K0XMFI011
SOIC-8WIDE
C31
100nF 50V
D2
3.9VZ 1/2W
MINIMELF
C25
C26
C50
C27
C51
C28
4.7uF 16V
ON VDD3 (PIN48)
L2
HZ0805C202R-10
0805
C29
10nF 50V
C30
1uf 50V

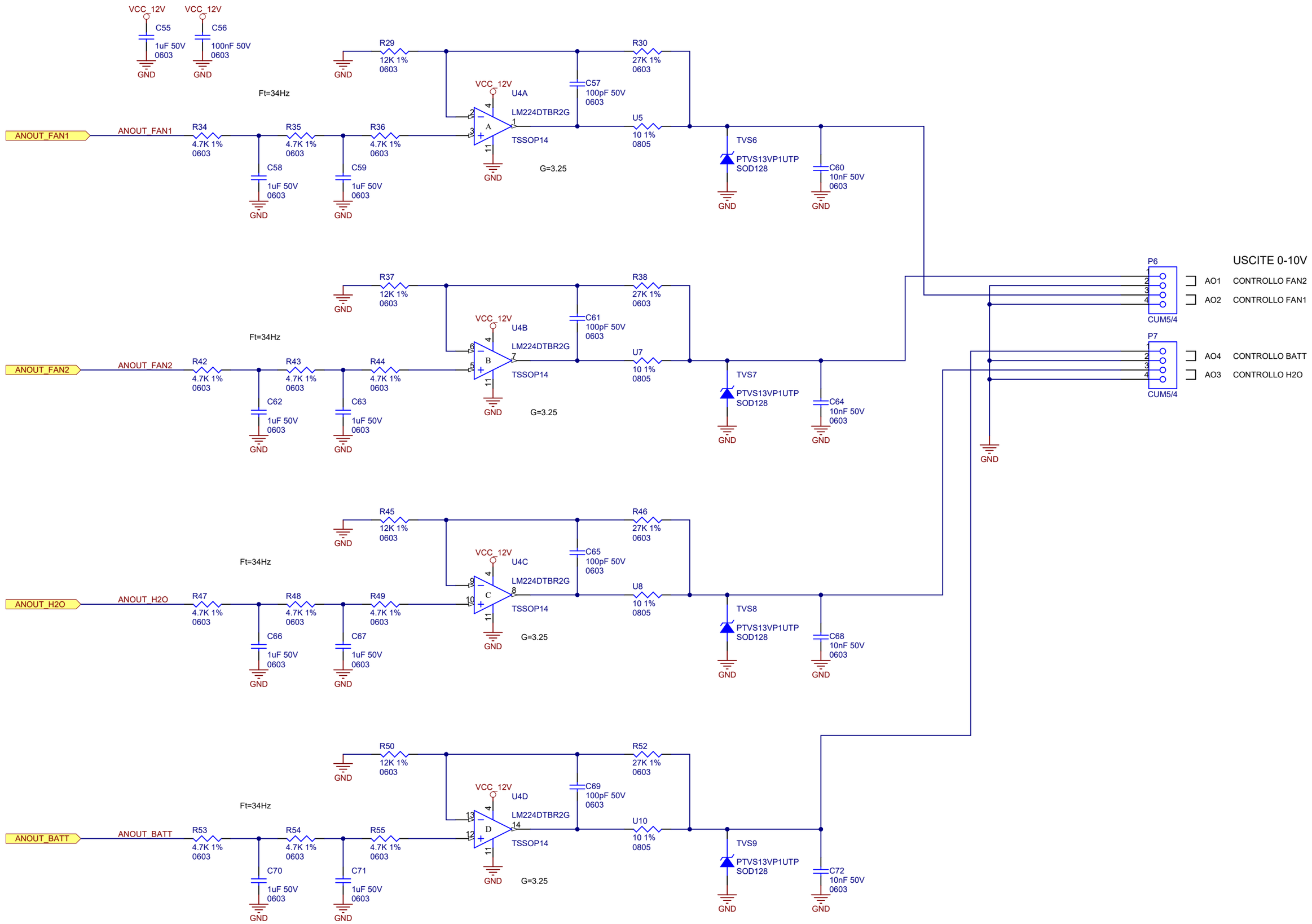
USCITE 0-10V
ANOUT_FAN1
ANOUT_FAN2
ANOUT_H2O
ANOUT_BATT
VCC_12V
GND
C55 1uF 50V 0603
C56 100nF 50V 0603
R29 12K 1% 0603
R30 27K 1% 0603
R34 4.7K 1% 0603
R35 4.7K 1% 0603
R36 4.7K 1% 0603
C57 100pF 50V 0603
U4A LM224DTBR2G TSSOP14
U5 10 1% 0805
TVS6 PTVS13VP1UTP SOD128
C60 10nF 50V 0603
C58 1uF 50V 0603
C59 1uF 50V 0603
Ft=34Hz
G=3.25
R37 12K 1% 0603
R38 27K 1% 0603
R42 4.7K 1% 0603
R43 4.7K 1% 0603
R44 4.7K 1% 0603
C61 100pF 50V 0603
U4B LM224DTBR2G TSSOP14
U7 10 1% 0805
TVS7 PTVS13VP1UTP SOD128
C64 10nF 50V 0603
C62 1uF 50V 0603
C63 1uF 50V 0603
R45 12K 1% 0603
R46 27K 1% 0603
R47 4.7K 1% 0603
R48 4.7K 1% 0603
R49 4.7K 1% 0603
C65 100pF 50V 0603
U4C LM224DTBR2G TSSOP14
U8 10 1% 0805
TVS8 PTVS13VP1UTP SOD128
C68 10nF 50V 0603
C66 1uF 50V 0603
C67 1uF 50V 0603
R50 12K 1% 0603
R52 27K 1% 0603
R53 4.7K 1% 0603
R54 4.7K 1% 0603
R55 4.7K 1% 0603
C69 100pF 50V 0603
U4D LM224DTBR2G TSSOP14
U10 10 1% 0805
TVS9 PTVS13VP1UTP SOD128
C72 10nF 50V 0603
C70 1uF 50V 0603
C71 1uF 50V 0603
P6 CUM5/4
P7 CUM5/4
AO1 CONTROLLO FAN2
AO2 CONTROLLO FAN1
AO4 CONTROLLO BATT
AO3 CONTROLLO H2O

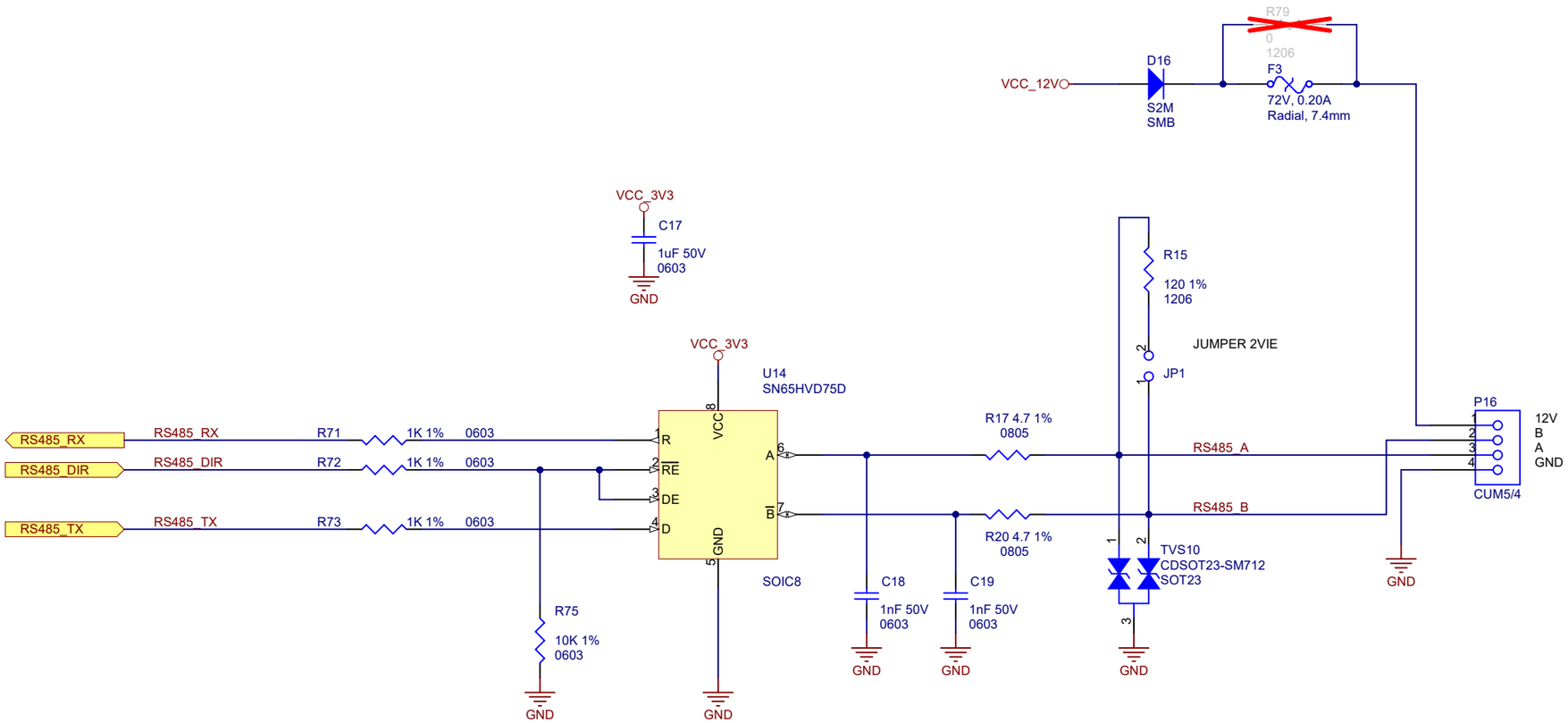
R79
0
1206
VCC_12V
D16
S2M
SMB
F3
72V, 0.20A
Radial, 7.4mm
VCC_3V3
C17
1uF 50V
0603
GND
R15
120 1%
1206
JUMPER 2VIE
JP1
VCC_3V3
U14
SN65HVD75D
RS485_RX
RS485_DIR
RS485_TX
R71
R72
R73
1K 1%
0603
R
RE
DE
D
VCC
GND
A
B
SOIC8
R17 4.7 1%
0805
R20 4.7 1%
0805
RS485_A
RS485_B
P16
12V
B
A
GND
CUM5/4
TVS10
CDSOT23-SM712
SOT23
C18
C19
1nF 50V
0603
R75
10K 1%
0603

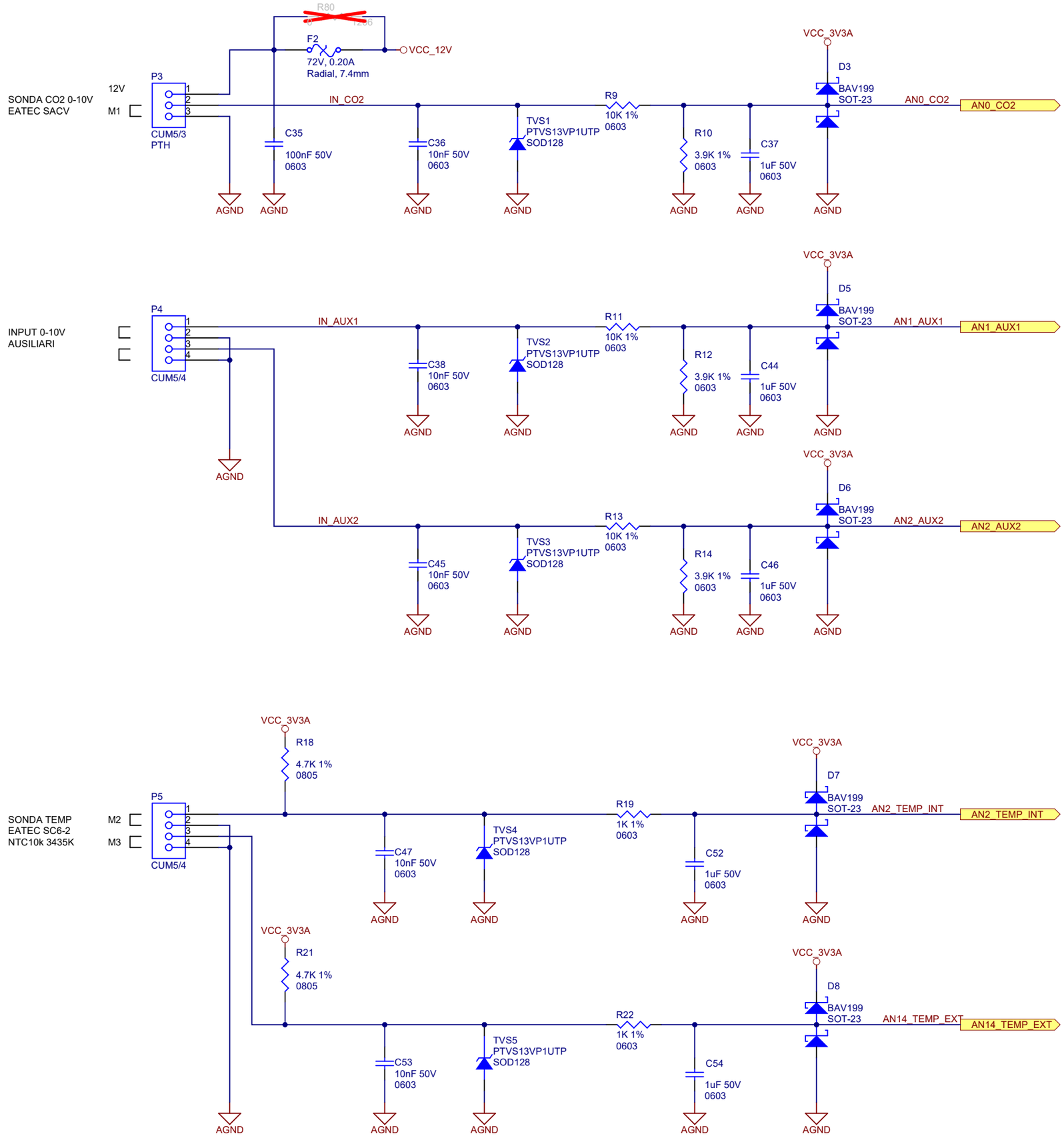
R80
F2
72V, 0.20A
Radial, 7.4mm
VCC_12V
VCC_3V3A
SONDA CO2 0-10V
EATEC SACV
12V
M1
P3
CUM5/3
PTH
IN_CO2
C35
100nF 50V
0603
C36
10nF 50V
0603
TVS1
PTVS13VP1UTP
SOD128
R9
10K 1%
0603
R10
3.9K 1%
0603
C37
1uF 50V
0603
D3
BAV199
SOT-23
AN0_CO2
AN0_CO2
AGND
INPUT 0-10V
AUSILIARI
P4
CUM5/4
IN_AUX1
C38
10nF 50V
0603
TVS2
PTVS13VP1UTP
SOD128
R11
10K 1%
0603
R12
3.9K 1%
0603
C44
1uF 50V
0603
D5
BAV199
SOT-23
AN1_AUX1
AN1_AUX1
IN_AUX2
C45
10nF 50V
0603
TVS3
PTVS13VP1UTP
SOD128
R13
10K 1%
0603
R14
3.9K 1%
0603
C46
1uF 50V
0603
D6
BAV199
SOT-23
AN2_AUX2
AN2_AUX2
SONDA TEMP
EATEC SC6-2
NTC10k 3435K
M2
M3
P5
CUM5/4
R18
4.7K 1%
0805
C47
10nF 50V
0603
TVS4
PTVS13VP1UTP
SOD128
R19
1K 1%
0603
C52
1uF 50V
0603
D7
BAV199
SOT-23
AN2_TEMP_INT
AN2_TEMP_INT
R21
4.7K 1%
0805
C53
10nF 50V
0603
TVS5
PTVS13VP1UTP
SOD128
R22
1K 1%
0603
C54
1uF 50V
0603
D8
BAV199
SOT-23
AN14_TEMP_EXT
AN14_TEMP_EXT

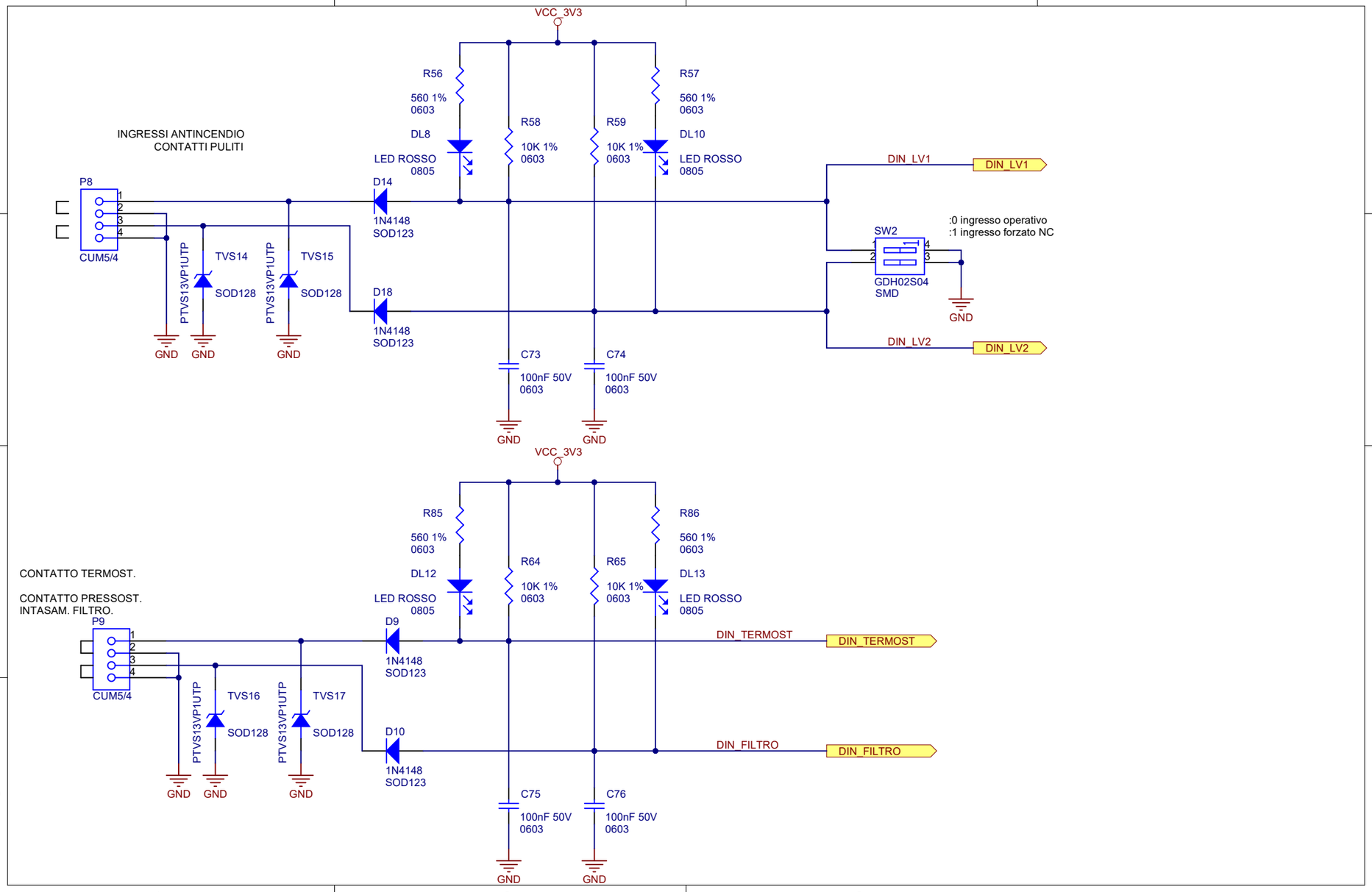
VCC_3V3
INGRESSI ANTINCENDIO
CONTATTI PULITI
P8
CUM5/4
R56
560 1%
0603
R57
560 1%
0603
R58
10K 1%
0603
R59
10K 1%
0603
DL8
LED ROSSO
0805
DL10
LED ROSSO
0805
D14
1N4148
SOD123
D18
1N4148
SOD123
TVS14
SOD128
TVS15
SOD128
PTVS13VP1UTP
PTVS13VP1UTP
GND
DIN_LV1
DIN_LV1
SW2
GDH02S04
SMD
:0 ingresso operativo
:1 ingresso forzato NC
DIN_LV2
DIN_LV2
C73
100nF 50V
0603
C74
100nF 50V
0603
CONTATTO TERMOST.
CONTATTO PRESSOST.
INTASAM. FILTRO.
P9
CUM5/4
R85
560 1%
0603
R86
560 1%
0603
R64
10K 1%
0603
R65
10K 1%
0603
DL12
LED ROSSO
0805
DL13
LED ROSSO
0805
D9
1N4148
SOD123
D10
1N4148
SOD123
TVS16
SOD128
TVS17
SOD128
DIN_TERMOST
DIN_TERMOST
DIN_FILTRO
DIN_FILTRO
C75
100nF 50V
0603
C76
100nF 50V
0603

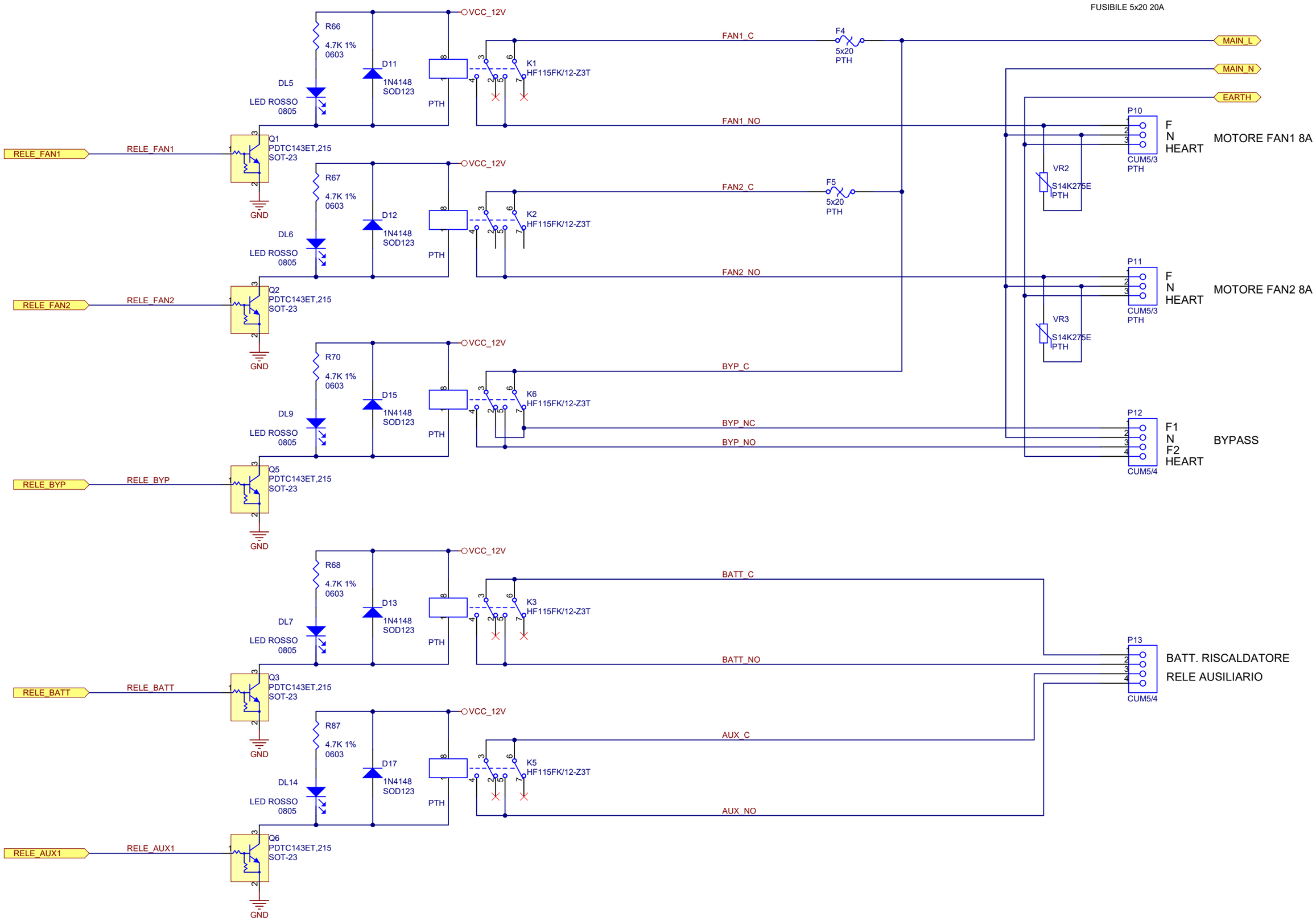
FUSIBILE 5x20 20A
VCC_12V
R66
4.7K 1%
0603
D11
1N4148
SOD123
DL5
LED ROSSO
0805
PTH
K1
HF115FK/12-Z3T
FAN1_C
F4
5x20
PTH
MAIN_L
MAIN_N
EARTH
FAN1_NO
P10
F
N
HEART
MOTORE FAN1 8A
CUM5/3
PTH
VR2
S14K275E
PTH
RELE_FAN1
RELE_FAN1
Q1
PDTC143ET,215
SOT-23
GND
R67
4.7K 1%
0603
D12
1N4148
SOD123
DL6
LED ROSSO
0805
K2
HF115FK/12-Z3T
FAN2_C
F5
5x20
PTH
FAN2_NO
P11
F
N
HEART
MOTORE FAN2 8A
CUM5/3
PTH
VR3
S14K275E
PTH
RELE_FAN2
RELE_FAN2
Q2
PDTC143ET,215
SOT-23
R70
4.7K 1%
0603
D15
1N4148
SOD123
DL9
LED ROSSO
0805
K6
HF115FK/12-Z3T
BYP_C
BYP_NC
BYP_NO
P12
F1
N
F2
HEART
BYPASS
CUM5/4
RELE_BYP
RELE_BYP
Q5
PDTC143ET,215
SOT-23
R68
4.7K 1%
0603
D13
1N4148
SOD123
DL7
LED ROSSO
0805
K3
HF115FK/12-Z3T
BATT_C
BATT_NO
P13
BATT. RISCALDATORE
RELE AUSILIARIO
CUM5/4
RELE_BATT
RELE_BATT
Q3
PDTC143ET,215
SOT-23
R87
4.7K 1%
0603
D17
1N4148
SOD123
DL14
LED ROSSO
0805
K5
HF115FK/12-Z3T
AUX_C
AUX_NO
RELE_AUX1
RELE_AUX1
Q6
PDTC143ET,215
SOT-23

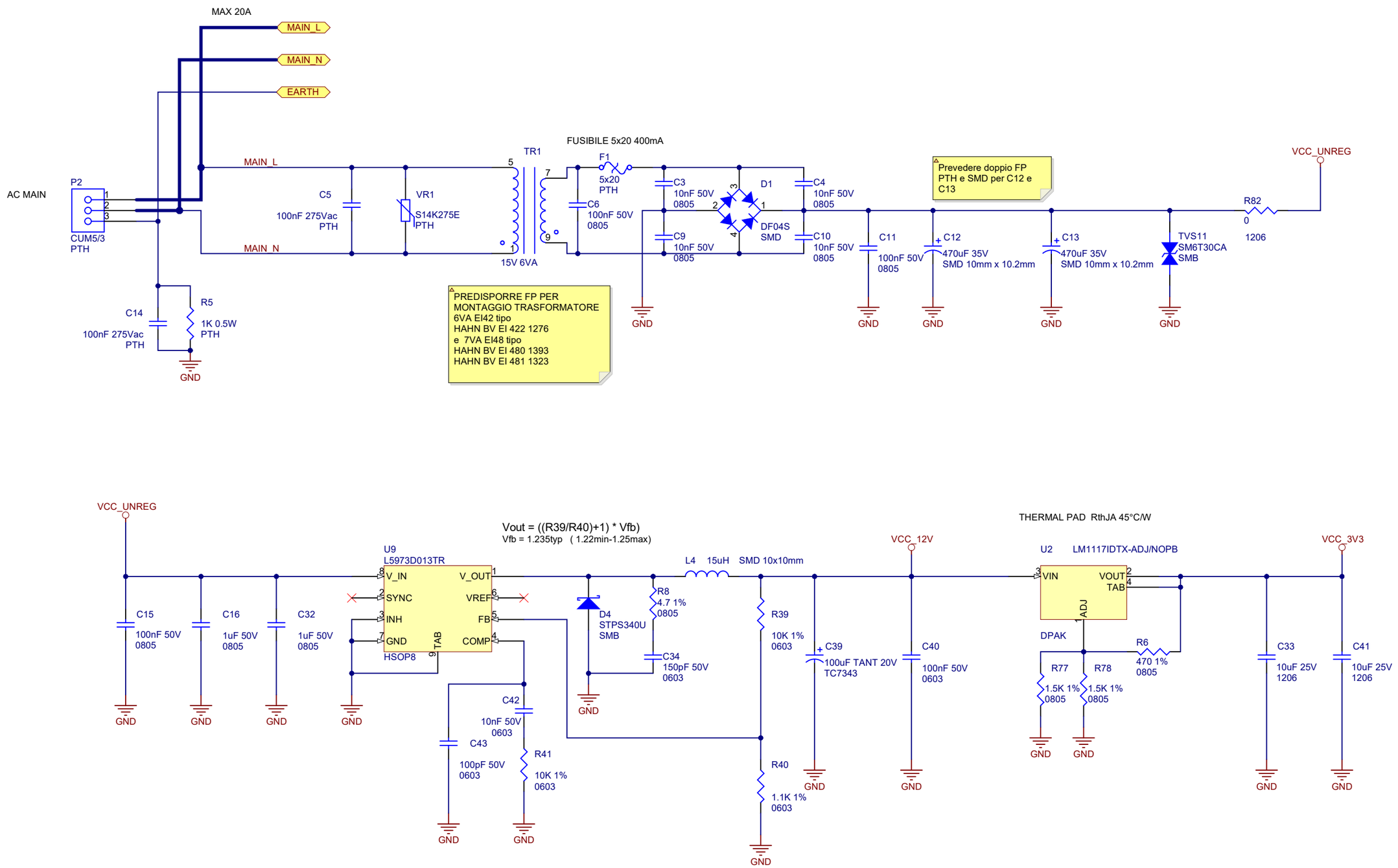
MAX 20A
MAIN_L
MAIN_N
EARTH
AC MAIN
P2
CUM5/3
PTH
MAIN_L
MAIN_N
C5
100nF 275Vac
PTH
VR1
S14K275E
PTH
TR1
15V 6VA
FUSIBILE 5x20 400mA
F1
5x20
PTH
C6
100nF 50V
0805
C3
10nF 50V
0805
C9
10nF 50V
0805
D1
DF04S
SMD
C4
10nF 50V
0805
C10
10nF 50V
0805
C11
100nF 50V
0805
C12
470uF 35V
SMD 10mm x 10.2mm
C13
470uF 35V
SMD 10mm x 10.2mm
TVS11
SM6T30CA
SMB
R82
0
1206
VCC_UNREG
Prevedere doppio FP
PTH e SMD per C12 e
C13
PREDISPORRE FP PER
MONTAGGIO TRASFORMATORE
6VA EI42 tipo
HAHN BV EI 422 1276
e 7VA EI48 tipo
HAHN BV EI 480 1393
HAHN BV EI 481 1323
C14
100nF 275Vac
PTH
R5
1K 0.5W
PTH
GND

VCC_UNREG
Vout = ((R39/R40)+1) * Vfb)
Vfb = 1.235typ (1.22min-1.25max)
U9
L5973D013TR
V_IN
SYNC
INH
GND
V_OUT
VREF
FB
COMP
TAB
HSOP8
C15
100nF 50V
0805
C16
1uF 50V
0805
C32
1uF 50V
0805
C42
10nF 50V
0603
C43
100pF 50V
0603
R41
10K 1%
0603
D4
STPS340U
SMB
R8
4.7 1%
0805
C34
150pF 50V
0603
L4 15uH SMD 10x10mm
R39
10K 1%
0603
R40
1.1K 1%
0603
C39
100uF TANT 20V
TC7343
VCC_12V
C40
100nF 50V
0603
THERMAL PAD RthJA 45°C/W
U2 LM1117IDTX-ADJ/NOPB
VIN
VOUT
TAB
ADJ
DPAK
R77
1.5K 1%
0805
R78
1.5K 1%
0805
R6
470 1%
0805
C33
10uF 25V
1206
C41
10uF 25V
1206
VCC_3V3
GND

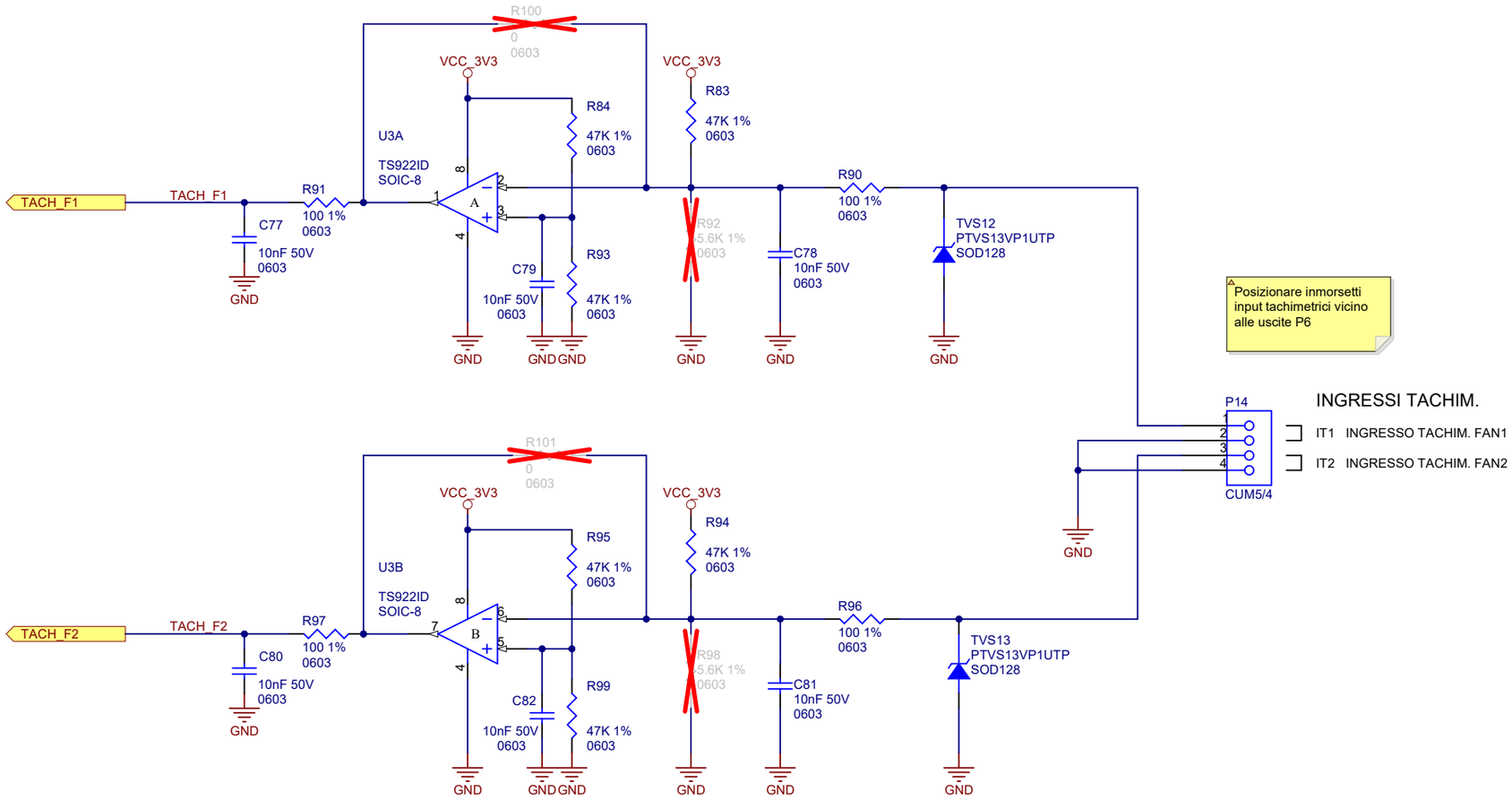
R100
0
0603
VCC_3V3
VCC_3V3
R83
47K 1%
0603
R84
47K 1%
0603
U3A
TS922ID
SOIC-8
TACH_F1
TACH_F1
R91
100 1%
0603
C77
10nF 50V
0603
GND
C79
10nF 50V
0603
R93
47K 1%
0603
R92
5.6K 1%
0603
C78
10nF 50V
0603
R90
100 1%
0603
TVS12
PTVS13VP1UTP
SOD128
GND
R101
0
0603
VCC_3V3
VCC_3V3
R94
47K 1%
0603
R95
47K 1%
0603
U3B
TS922ID
SOIC-8
TACH_F2
TACH_F2
R97
100 1%
0603
C80
10nF 50V
0603
C82
10nF 50V
0603
R99
47K 1%
0603
R98
5.6K 1%
0603
C81
10nF 50V
0603
R96
100 1%
0603
TVS13
PTVS13VP1UTP
SOD128
P14
CUM5/4
INGRESSI TACHIM.
IT1 INGRESSO TACHIM. FAN1
IT2 INGRESSO TACHIM. FAN2
Posizionare inmorsetti input tachimetrici vicino alle uscite P6